UNITED STATES PATENT AND TRADEMARK OFFICE

BEFORE THE PATENT TRIAL AND APPEAL BOARD

VOLKSWAGEN GROUP OF AMERICA, INC.,
Petitioner,

v.

NEO WIRELESS LLC,
Patent Owner.

Case IPR2022-01539
Patent 10,965,512

EXHIBIT 2001
DECLARATION OF WILLIAM P. ALBERTH JR.

TABLE OF CONTENTS

I. INTRODUCTION 3
II. QUALIFICATIONS 4
III. LEGAL STANDARDS 6

A. Priority Date Of Patent 6
B. Level Of Ordinary Skill In The Art. 6
C. Claim Construction. 8
D. Obviousness Legal Standard. 9

IV. CLAIMS-AT-ISSUE 11
V. OPINIONS 12

A. Petitioner's Ground 1. 12

1. Ground 1 Does Not Disclose "Cell-Specific Pilots" 13
2. Ground 1 Does Not Disclose Or Render Obvious "Beam-Forming" As Claimed. 20

B. Petitioner's Ground 2. 26

1. Ground 2 Does Not Disclose "Cell-Specific Pilots." 26
2. Ground 2 Does Not Disclose That The Plurality Of First And Second Claimed Subcarriers Are Both Transmitted "In At Least One Of The Time Slots." 33

VI. CONCLUSION 41

I. INTRODUCTION

1. My name is William P. Alberth Jr. I am an expert in mobile telecommunications and wireless technology. As further detailed below and exhibited in my attached *curriculum vitae*, I have over 25 years of experience in the design, development, implementation, and manufacturing of mobile telephones, smartphones, and other electronic equipment in addition to being an inventor on over 100 patents, including those related to telecommunications and wireless communications.

2. I have been retained as an expert witness to provide my independent opinion in regard to the matters at issue in *inter partes* review of U.S. Patent No. 10,965,512 ("the '512 patent") in IPR2021-01539. I have been retained by Neo Wireless LLC ("Neo"), the Patent Owner in the above proceedings. The Petitioner is Volkswagen Group of American Inc. ("VW").

3. For my work on this case, I am being compensated for my time at my typical consulting rate of $200 per hour. I am also being reimbursed for expenses that I incur during the course of this work. My compensation does not depend on the substance of my opinions or the outcome of any issues in this case.

4. My analysis of the materials produced in this matter is ongoing and I will continue to review any new material as it is provided. This declaration

represents only those opinions I have formed to date. I reserve the right to amend or supplement my opinions based on additional documents or evidence I am presented, including without limitation any arguments or expert declarations advanced by VW in this case.

II. QUALIFICATIONS

5. I am qualified to be an expert witness in this matter as I possess the requisite knowledge, skill, experience, training and education relating to the subject matter covered by the asserted patents.

6. In summary, I have over 25 years of experience in the design, development, implementation, and manufacturing of mobile telephones, smartphones, and other electronic equipment. The majority of my career was spent at Motorola where my final role was serving as the Chief Technology Officer for Motorola Mobile Devices. I held that position from 2007 until August 2012, and in that role, I led the development of differentiating technology that was integrated into Motorola's commercial mobile telephone products.

7. During the early stages of my career with Motorola (between 1987 and 2006, covering the Priority Dates of the '941 patent) I was employed as an engineer, working on developing cutting-edge chipsets to enable cellular devices, and in the development of many products that changed the way people

communicated, including the development of the Motorola MicroTAC, StarTAC and RAZR mobile telephones. I worked on or directed work on evaluating transmitter technologies and architectures to mitigate the effects of PAPR (Peak to Average Power Ratio) on the current drain of the devices. Some of the techniques evaluated include for example: pre-distortion; envelope following; EER (Envelope Elimination and Restoration); and Adaptive biasing.

8. My educational background includes a B.S. in Electrical Engineering from the University of Illinois Urbana-Champaign (1985), and a M.S. in Electrical Engineering from Illinois Institute of Technology (1992).

9. I am inventor or co-inventor on over 100 patents issued or pending, including patents related to my work on transmitter architectures involved for wireless communications.

10. In forming my opinions here, I am relying on my education and experience, including my over 25 years of experience in a variety of technologies and industries related to various wireless communications systems.

11. Additional information concerning my background, qualifications, publications, conferences, honors, and awards are described in my Curriculum Vitae, a copy of which is attached with this Report as Exhibit 2002.

III. LEGAL STANDARDS

12. I am not a lawyer, and I do not intend to offer any opinions as to the interpretation of the law. When considering the ’512 patent and stating my opinions, I rely on the following legal standards as described to me by the attorneys for Neo Wireless.

A. Priority Date Of Patent.

13. I understand that the analysis of alleged obviousness of the Patent should be performed from the perspective of a POSITA as of the priority date of the Patent. Through a series of continuations, the Patent claims priority to January 29, 2004. My opinions in this matter are from the perspective of a POSITA as of that date; however, my opinions do not change if the priority date is slightly changed.

B. Level Of Ordinary Skill In The Art.

14. My opinions in this declaration are based on the understandings of a person of ordinary skill in the art, as of the time of the invention. I understand that the person of ordinary skill in the art is a hypothetical person who is presumed to have known the relevant art at the time of the invention. By “relevant,” I mean relevant to the challenged claim of the ’512 patent.

15. I understand that various factors should be considered when determining the person of ordinary skill in the art in connection with a particular patent. I understand that these factors include, without limitation, the type of problems encountered in the art, the prior solutions to those problems found in the prior art references, the rapidity with which innovations are made, the sophistication of the technology, the level of education of active workers in the field, and my own experience working with those of skill in the art at the time of the invention.

16. I am readily familiar with the level of ordinary skill in the art as of the priority date of the Patent. My qualifications at that time far exceeded that of a POSITA, and I had worked with, as well as supervised, many POSITA's throughout my work in the field.

17. Dr. Min opines that "[a] person of ordinary skill in the art ("POSA") would have a bachelor's degree in electrical engineering, computer engineering, computer science, or an equivalent field, or an advanced degree in those fields, as well as [at] least 3-5 years of academic or industry experience in mobile wireless communications ,or comparable industry experience." Ex. 1003 [Min-Decl.] ¶ 65. For the purpose of this declaration, I will apply the same definition of the level of skill of a POSITA.

18. Based on my experience, education, and training, I met the definition of a POSITA in January of 2004, as of the priority date of the Patent. My qualifications at that time far exceeded that of a POSITA, and I had worked with, as well as supervised, many POSITA's throughout my work in the field. My opinions concerning the '879 Patent claims and the prior art are from the perspective of a POSITA, as set forth above.

19. As further discussed below, my opinions as stated in this declaration are valid even if the Board adopts a slightly different level of ordinary skill in the art.

C. Claim Construction.

20. I understand that claims in a patent-at-issue in an IPR are generally interpreted according to the district court-type claim construction.

21. I further understand that claim terms are interpreted as they would have been interpreted by a person of ordinary skill in the art at the time of the invention, in light of the specification and the patent's prosecution history in the patent office.

D. Obviousness Legal Standard.

22. I understand that a patent claim is unpatentable if the claimed invention would have been obvious to a person of ordinary skill in the art at the time of the invention.

23. I understand that an obviousness analysis involves comparing a claim to the prior art to determine whether the claimed invention would have been obvious to a person of ordinary skill in the art at the time of the invention in view of the prior art and in light of the general knowledge in the art as a whole. I also understand that obviousness is ultimately a legal conclusion based on underlying facts of four general types, all of which must be considered: (1) the scope and content of the prior art; (2) the level of ordinary skill in the art; (3) the differences between the claimed invention and the prior art; and (4) any objective indicia of non-obviousness, including any praise of the invention. Objective indicia of non-obviousness may include, for example, commercial success of an embodiment, a long-felt need, skepticism, failure by others to find the solution provided by the claimed invention, copying by others of the subject matter of the claim invention, unexpected results of the claimed invention, acceptance of others and industry praise, and licensing of the patents.

24. I also understand that obviousness may be established under certain circumstances by combining or modifying the teachings of the prior art. However, I have been informed that a claim is not proved obvious merely by demonstrating that each of the elements was independently known in the prior art. I have been informed that many, if not all, inventions rely on building blocks already previously known, and claimed discoveries almost of necessity will likely be combinations of what is already known. I have been informed that it is important to identify whether a reason existed at the time of the invention that would have motivated a person of ordinary skill in the art in the relevant field to combine the known elements in the way the claimed invention does. Specific teachings, suggestions, or motivations to combine any first prior art reference with a second prior art reference can be explicit or implicit, but must have existed before the date of purported invention. I understand that prior art references themselves may be one source of a specific teaching or suggestion to combine features of the prior art, but that such suggestions or motivations to combine art may come from the knowledge that a person of ordinary skill in the art would have had.

25. I understand that a reference may be relied upon for all that it teaches, including uses beyond its primary purpose, but also including teachings that lead away from the invention. I understand that a reference may be said to teach away

when a person of ordinary skill, upon reading the reference, would be discouraged from following the path set out in the reference, although the mere disclosure of alternative designs does not teach away.

26. I further understand that whether there is a reasonable expectation of success in combining references in a particular way is also relevant to the analysis.

27. I understand that it is improper to use hindsight to combine references or elements of references to reconstruct the invention using the claims as a guide. My analysis of the prior art is made from the perspective of a person of ordinary skill in the art at the time of the invention.

28. I am not offering any legal opinions in this declaration nor am I qualified to do so. I only consider such legal standards in framing my opinions and conclusions as well as placing assertions made by Petitioner in the Petition into the proper context. Additionally, from a subject matter perspective, I understand that the petitioner always has the burden of persuasion regarding a challenge of patentability of an invention under an inter partes review.

IV. <u>CLAIMS-AT-ISSUE</u>

29. I understand that Petitioner has challenged claims 1-30 of the ’512 Patent under three grounds, as summarized below (*see* Pet., 6):

Ground	Basis	Claims	References
1.	§103	1-30	Kim in view of Tong
2.	§103	1, 3, 4, 6-8, 10, 11, 13-15, 17, 18, 20, 22, 23, 25, 26, 28, and 30	Ketchum in view of Li
3.	§103	5, 12, 21, and 29	Ketchum in view of Li and further in view of Smee

30. Of the challenged claims, only claims 1, 8, 15 and 23 are independent. In this declaration, I have only been asked to address arguments relating to the independent claims and, therefore, I do not address ground 3 of the Petition, which exclusively challenges certain dependent claims.

31. Furthermore, for the purposes of this declaration, I will discuss the relevant patentability arguments with regards to independent Claim 1 only. Independent challenged Claims 8, 15 and 23 recite corresponding limitations, and the arguments I discuss in connection with claim 1 equally apply to those other independent claims.

V. <u>OPINIONS</u>

A. Petitioner's Ground 1.

32. Petitioner's Ground 1 relies on a combination of Kim and Tong to challenge the Claims. Pet., 6. As I will explain below, this Ground does not disclose the claims for at least two reasons.

1. Ground 1 Does Not Disclose "Cell-Specific Pilots"

33. The Claims recite a transmitter that is configured to "insert first pilots of a first type onto a first plurality of subcarriers, wherein the first pilots are cell-specific pilots." Ex. 1001 ['512 Patent] cl. 1. Petitioner relies on Kim's pilot *patterns* for the disclosure of the "first type" of pilots that are "cell-specific." Pet., 26 ("The pilots include a first pilot *pattern* in common for each cell and a second pilot pattern that is 'different for each cell.'"). As I will explain below, Kim discloses that the ***same*** pilot(s) are transmitted from each cell, and only the ***pattern*** of which subcarriers are selected to transmit those same pilot(s) are modified depending on the cell. The Patent's specification and claim language both make clear that cell-specific pilot patterns, as opposed to cell-specific pilots, do not disclose this limitation.

34. The Patent's specification explains that transmitting cell-specific pilot *patterns* is prior art that is distinct from, and improved upon by, the claimed invention because this previous art fails to solve the problem of interference:

> ***One approach to deal with the interference problem has been*** to have each cell ***transmit a particular pattern of pilot*** subcarriers based on a certain type of cell-dependent random process. This approach, to a certain degree, has mitigated the impact of the mutual interference between the pilot subcarriers from adjacent cells; ***however, it has not***

provided for a careful and systematic consideration of the unique requirements of the pilot subcarriers.

Ex. 1001 ['512 Patent] 1:62-2:2.

35. The Patent's embodiments further confirm that the invention relates to cell-specific pilots, not pilot patterns. For example, the Patent explains that a receiver within the zone of the pth cell in a network arrangement of m cells receives a signal on subcarrier (i) at time (t_k) that is of the general form:

$$s_i(t_k) = a_{i,p}(t_k)e^{j\varphi_{i,p}(t_k)} + \sum_{\substack{m=1 \\ m \neq p}}^{M} a_{i,m}(t_k)e^{j\varphi_{i,m}(t_k)}$$

where "$a_{i,m}(t_k)$ and $\varphi_{i,m}(t_k)$ denote the signal amplitude and phase, respectively, associated with the i_{th} subcarrier from the base station of the m_{th} cell." Ex. 1001 ['512 Patent] 5:1-15.

36. This equation shows that a receiver within the zone of cell p receives a signal that comprises two parts: a first part that has the unique amplitude and phase of cell p, and a second part that is the sum of signals from other cells m with their unique amplitudes and phases. When the signal being transmitted by the pth cell is a cell-specific pilot, the cell-specific information used by the receiver is carried by the amplitude and phase, $a_{i,p}(t_k)$ and $\varphi_{i,p}(t_k)$, "and other signals described

by the second term on the right hand side of equation (1) [above] will be interference." Ex. 1001 ['512 Patent] 5:17-22; *see also id*., 4:8-11 ("Pilot subcarriers, whose phases and amplitudes are predetermined and made known to all receivers and which are used for assisting system functions such as estimation of system parameters"). Thus, the embodiments further make clear that the invention's "cell-specific pilots" have cell-specific amplitude and/or phases carrying cell specific information, and are distinct from cell-specific pilot *patterns*, which represent transmitting the same pilot symbol(s) but only varying the pattern of which subcarriers are selected to transmit them.

37. The claim language further confirms the distinction between cell-specific pilots, and cell specific pilot patterns. The Claims' plain and ordinary meaning requires that the "pilots" be cell-specific, ***not*** that the pattern by which the pilots are placed be "cell-specific." Ex. 1001 ['512 Patent] cl. 1 ("wherein ***the first pilots*** are cell-specific pilots"). This is even more apparent because the Claims specifically recite a limitation regarding placement of pilots by reciting "insert[ing]" the pilots "onto a first plurality of subcarriers." *Id*. Yet, even though the Claims recite both pilots and placement of pilots, they deliberately recite only that the "pilots" are cell-specific, ***not*** that the ***pattern*** of insertion of the pilots is cell-specific. *Id*. In contrast, a cell-specific pilot pattern would, at best, relate to

cell-specific selection of the "plurality of subcarriers" upon which the pilots are placed.

38. Petitioner's ground 1 expressly and exclusively relies on the disclosure of cell-specific pilot ***patterns*** for the disclosure of this limitation. Pet., 26 ("The pilots include … a second ***pilot pattern*** that is different for each cell"); 26 ("Each Q_2 pattern is a ***specific pattern for each cell***"); 26 ("Figure 10, reproduced and annotated below, shows three example ***pilot patterns***"); 27 ("The symbols of each ***pilot pattern*** are inserted onto different subcarriers"); 27 ("As Dr. Min explains, patterns 1 and Q-1 represent different ***pilot patterns*** that are each specific to the particular cell"); 28 ("Thus, the Q_2 (residual) ***cell-specific pilot patterns*** are inserted onto a first plurality of subcarriers") (internal quotations and citations omitted).

39. However, as I explained above, the claimed invention requires cell-specific pilots, not cell-specific pilot patterns. Furthermore, as I will explain below, Kim does not disclose cell-specific pilots, but only transmitting the ***same*** pilots from different cells, using only different patterns of subcarriers to transmit those same pilots depending on the cell. Kim discusses, for example, characteristics of pilot symbols (*e.g.*, interval), but chooses to use cell-specific pilot ***patterns***, not cell-specific pilots, to identify each cell:

> Fig. 9 shows a case when the number of total subcarriers is N, a subcarrier interval of a pilot symbol is N_f, and a time interval of the pilot symbol is N_t. In this instance, the number of pilot symbols each of which is inserted for each group of N_f subcarriers at the s_1^{th} symbol 910, and ***the pilot symbols respectively have a pattern*** $p_{s1,c}^{(i)}$ where c is a cell number, i is the ith pilot subcarrier in the s_1^{th} OFDM symbol, and ***the pattern*** $\boldsymbol{p_{s1,c}^{(i)}}$ ***can be varied according to c and s.*** Therefore, the slot synchronization and the frame synchronization are estimated and the cells are searched by using ***a specific pilot pattern for each cell*** and finding a cross correlation on the available pattern.

Ex. 1004 [Kim] 24:2-11.

40. Kim consistently discloses only cell-specific pilot ***patterns***, and not cell-specific pilots. *See, e.g.*, Ex. 1004 [Kim] 3:22-23 ("the second preamble may have specific ***patterns*** for a plurality of cells for the purpose of cell search"); 4:9-10 (similar); 5:6-7 (similar); 6:3-4 (similar); 4:20-21 ("a cell searcher for using a ***pattern*** specific to each cell"); 7:8-10 ("a ***pilot pattern*** of the pilot symbol in the second slot includes a first pattern in common for each cell and a second ***pattern*** different for each cell"); 21:22-22:1 ("specific ***patterns*** for respective cells"); 24:10 ("using a specific ***pilot pattern*** for each cell"); 24:16 ("a specific ***pilot pattern*** is allocated to each cell").

41. Other disclosures in Kim are also consistent with a POSITA's understanding that the ***same*** pilot(s) are transmitted from different cells, and only the pattern of transmission of those same pilots are varied depending on the cell. *See, e.g.*, Ex. 1004 [Kim] 36:19 ("a specific pattern for each cell of ***the*** pilot is used"); 38:12 (same); 62:16-17 ("using a specific pattern for each cell of ***the*** pilot symbol").

42. That Kim utilizes the same pilot(s) for all cells is even more clear in its embodiments. For example, Kim explains that each cell C_1, C_2 in an exemplary embodiment has four antennas. Ex. 1004 [Kim] 31:10-16. Each antenna (not each cell) has an antenna-specific pilot symbol, AP_0, AP_1, AP_2, AP_3. *Id.*; *see also id.*, 31:3-4 ("A pilot symbol AP_0 of the antenna 0 and a pilot symbol AP_1 of the antenna 1 are respectively inserted …."). Thus, each cell has an ***identical*** set of pilot symbols, each corresponding to one of the four antennas in the cell: AP_0, AP_1, AP_2, AP_3. The ***pattern*** of this identical set of pilot symbols is then modified depending on each cell, making the pilot ***patterns*** cell-specific. *Id.*, 31:13-16 ("the ***patterns*** for changing the positions of the pilot symbols AP_0, AP_1, AP_2, and AP_3 according to the respective antennas are ***differently allocated for the respective cells C_1 and C_2.***").

43. This is further shown in Kim's annotated Fig. 14, where the same pilots AP_0, AP_1, AP_2, and AP_3 are transmitted from each cell, C_1 (red) and C_2 (blue), but the pattern of transmission is different for each cell:

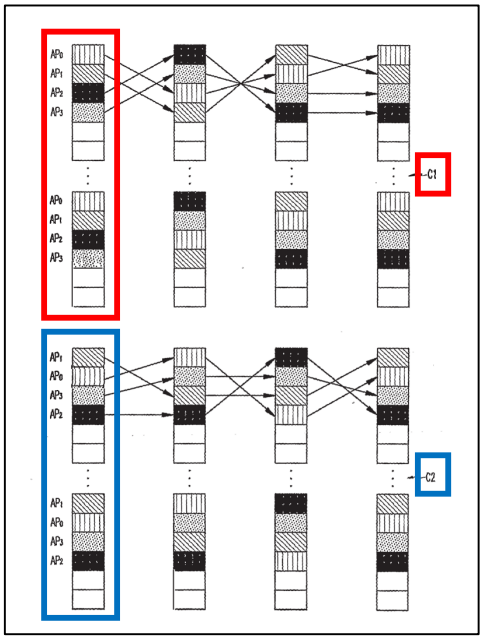

44. Thus, unlike the '512 Patent's Claims which require cell-specific pilots, which the exemplary embodiments achieve by varying pilot signal amplitude and phase according to the cell specific information, Ex. 1001 ['512 Patent] 5:5-15, Kim opts to transmit the same pilots but vary the pattern of the subcarriers selected to transmit those pilots to obtain cell specific pilot patterns.

45. For at least the reasons I explain above, Ground 1 does not disclose "cell-specific pilots."

2. *Ground 1 Does Not Disclose Or Render Obvious "Beam-Forming" As Claimed.*

46. The Claims require that "at least some subcarriers of the first plurality of subcarriers or the second plurality of subcarriers are beam-formed." Ex. 1001 ['512 Patent] cl. 1.

47. Petitioner relies on importing beam-forming from Tong into Kim to beam-form its Q_1 and Q_2 pilot patterns:

> Kim's base-station inserts the Q_1 and Q_2 pilot patterns onto the first and second pluralities of subcarriers. However, Kim does not expressly disclose that at least some of these subcarriers are beam-formed. But Tong discloses this limitation.

Pet., 33.

48. However, as I will explain below, Kim's algorithms, including its Q_1 and Q_2 pilot patterns, are for initial cell search and synchronization, which ***cannot*** utilize adaptive beam-forming as taught in Tong—because the transmitter does not yet have an established connection with a known user to receive the necessary feedback such that it can then beam-form multiple antennas for that user.

49. Tong defines beam-forming as a process where "a spare transmit antenna" is used to redundantly transmit data that is also being transmitted via another antenna in order to increase the quality of the signal received by the user:

> In essence, a spare transmit antenna is used to redundantly transmit data being transmitted over another of the transmit antennas in a manner wherein the primary layer information transmitted from a first transmit antennas is effectively combined in the channel with the redundantly transmitted information from the spare transmit antennas to effectively reinforce transmission of a given layer. The data transmitted from the spare antenna is weighted to achieve a desired gain.

Ex. 1005 [Tong] 8:53-61.

50. Tong discloses a system that implements adaptive beam-forming, where it uses the determined channel conditions between the transmitter and receiver to determine which signals should be beam-formed and which antennas should be used to beam-form those selected signals. Ex. 1005 [Tong] 8:56-57 ("a first transmit antenna is effectively combined ***in the channel*** with the redundantly transmitted information"). A 'channel' is a specific pathway between the transmitter and a receiver").

51. Tong explains that "importantly, the channel conditions are used" to arrange the desired beam-forming:

> Importantly, the channel conditions are used to determine the transmit antennas from which the various layers should be transmitted, as well as identifying the redundant transmit antennas through which beam-forming is provided. Additionally, the channel conditions will also be used to determine the respective weighting factors for the beam-

> forming layers as well as any weighting factor, if necessary or desired, for the primary layer.

Ex. 1005 [Tong] 13:60-67. Tong teaches that an OFDM system implementing its beam-forming would operate the same way. *Id*., 14:58-15:2 (explaining that an OFDM system with beam-forming would operate "as described above.").

52. Channel characteristics cannot generally be known unless and until there is an established channel between the transmitter and the receiver, and the receiver provides feedback to the transmitter to enable channel estimation. For example, Tong explains that "channel estimates for each of the channels may simply be determined at the user element 16 and transmitted to the base station 14." Ex. 1005 [Tong] 14:5-7. Alternatively, Tong explains that a receiver may have knowledge of the base configuration, and itself utilize the channel estimation information to configure beam-forming at the transmitter. *Id*., 14:9-14. In either case, Tong is clear that receiver feedback based on channel conditions is a necessity for its beam-forming embodiments. *See also* Ex. 1005 [Tong] 8:56-57 ("a first transmit antenna is effectively combined ***in the channel*** with the redundantly transmitted information").

53. As I will explain below, in Kim, because its pilot signals Q_1 and Q_2 (and the overall method) are exclusively directed at initial synchronization and

cell-search, there is not yet a channel established and no feedback is provided from the receiver. Thus, adaptive beam-forming as disclosed in Tong is not feasible for these signals.

54. Kim's algorithm and pilots are exclusively for initial synchronization and cell-search. Kim explains that "[i]n general, a terminal is required to read signals of a base station and synchronize its time and frequency with the terminal ***for initial synchronization***, ***and search cells*** in a cellular system." Ex. 1004 [Kim] 1:23-25. Kim then discloses a system that it states "provide[s] a structure of a preamble and a pilot for synchronizing downlinks and searching cells with a lesser amount of calculation in the OFDMA-based cellular system." *Id*., 3:12-14.

55. Kim's embodiments, accordingly, disclose methods for initial synchronization and cell search. *See, e.g., id*., 12:11-13 ("Referring to FIGs. 2A to 10, a synchronization and cell search method according to the first preferred embodiment of the present invention will be described"); 14:5-8 ("Referring to FIG. 3, a method for estimating synchronization of an initial symbol in the synchronization and cell search method according to the first preferred embodiment will be described in detail").

56. Kim further discloses that it utilizes its pilot patterns Q_1 and Q_2 for the same initial synchronization and cell search. Specifically, Kim discusses (and the

Petition cites) its Q_1 and Q_2 pilot patterns in connection with its Fig 10. Ex. 1004 [Kim] 24:20-25:5; Pet., 26-27. Kim explains that its discussion of Fig. 10, like its other discussions, is in connection with initial search and synchronization. *See*, e.g., Ex. 1004 [Kim] 12:11-13 ("Referring to FIGs. 2A to 10, a synchronization and cell search method according to the first preferred embodiment of the present invention will be described"); 25:3-5 ("Accordingly, the slot synchronization is found with a lesser amount of calculation by using the Q_1 common patterns, and the cells are searched by using the residual Q_2 patterns or a preamble").

57. Similarly, in its second embodiment in Figs. 11A and 11B, Kim further explains how the pilot patterns Q_1 and Q_2 are utilized for initial cell search and synchronization. *Id*., 25:6-9 ("Referring to FIGs. 11A, 11B and 12, a method of using the pilot pattern shown in FIG. 10 in the downlink signal of the OFDMA-based mobile communication system … will be described in detail"); 25:10-12 ("First, a synchronization and cell search method according to a second preferred

embodiment of the present invention will be described with reference to FIGs. 11A and 11B").[1]

58. However, initial synchronization and cell search, which, as I explained above, is what Kim's method is directed at, are not appropriate for adaptive beam-forming as disclosed in Tong. This is because in Kim's method of cell search and initial synchronization, the transmitter does not yet have an established channel with a user, and does not yet know what user is going to connect to it, nor does it have feedback of the not-yet-established channel, so as to coordinate two or more antennas to beam-form any specific data to a given user through any specific channel.

59. For at least the reasons I explain above, Petitioner in its Ground 1 does not show how or why a POSITA would modify Kim to implement beam-forming as disclosed in Tong.

---

[1] While Kim's additional embodiments operate in a similar manner, I mainly discuss Kim's first and second embodiments since those are the portions of Kim relied upon by the Petition. *See, e.g.*, Pet., 26 (relying on Kim pp. 6, 24-26), 27 (relying on Kim Fig. 10), 32 (relying on Kim Fig. 1 & pp. 25-26).

B. Petitioner's Ground 2.

60. Petitioner in its Ground 2 relies on a combination of Ketchum and Li to challenge the Claims. Pet., 6. As I will explain in the following sections, this Ground 2 also fails for at least two reasons.

1. Ground 2 Does Not Disclose "Cell-Specific Pilots."

61. The Claims recite a first type of pilots that are "cell-specific." Ex. 1001 ['512 Patent] cl. 1. The Patent explains that "cell-specific pilots" contain "information unique to each individual cell." Ex. 1001 ['512 Patent] 3:17-19; *see also id*., 1:50-51 ("cell-specific information that is unique to a particular cell …."). Petitioner first relies on Ketchum's "beacon pilots" for the disclosure of "cell-specific pilots." Pet., 60. Petitioner in the alternative relies upon the alleged disclosure of cell-specific pilots in Li, and importing them into Ketchum. Pet., 62. As I will explain below, Ketchum's beacon pilots are not cell-specific pilots, and Petitioner does not show any motivation why a POSITA would have modified Ketchum to implement cell-specific pilots in view of Li.

62. Ketchum's "beacon pilots" are generic pilots, and "the ***same*** set of pilot symbols" is transmitted from each cell. As Ketchum explains:

> The beacon pilot includes ***a specific set of pilot symbols that is transmitted from each of the N_T transmit antennas. The same set of***

> ***pilot symbols*** is transmitted for N_B symbol periods designated for beacon pilot transmission.

Ex. 1006 [Ketchum] [0038].

63. Ketchum's provisional application, which is incorporated into Ketchum's disclosure (*id*., [0001]), similarly explains that Ketchum's beacon pilots are not cell-specific, but rather are a generic set identically sent from each cell:

> A beacon pilot comprises ***a defined set*** of modulation symbols that is ***transmitted from all transmit antennas***.

Ex. 1030 [Ketchum Provisional] [1088]; *see* Ex. 1006 [Ketchum] [0001].

64. Petitioner argues that because a receiver utilizes Ketchum's beacon pilots to obtain frequency and timing of the access point sending the pilot, the pilots are cell-specific. Pet., 62. That is incorrect.

65. First, no matter how the receiver utilizes the beacon pilots, Ketchum is unambiguously clear that its beacon pilots consist of an ***identical*** set of pilots being transmitted from each cell. Ex. 1006 [Ketchum] [0038]; Ex. 1030 [Ketchum Provisional] [1088]. There is nothing "cell-specific" about them.

66. The '512 Patent itself confirms that merely utilizing common pilot signals to determine timing and frequency of a transmitter does not transform the common pilots into cell-specific pilots. This is because the '512 Patent itself also utilizes its common pilots (not cell-specific pilots) for frequency and timing

estimation, but refers to those as "common pilots," not "cell-specific pilots." *See, e.g.*, Ex. 1001 ['512 Patent] 5:65-67 ("The common pilot subcarriers can be used for a number of functionalities, such as frequency offset estimation and timing estimation"); *see also id.*, 6:1-47 (explaining the details of how to use the common pilots for frequency and timing estimation). Thus, the '512 Patent confirms that Ketchum's use of its universal, generic beacon pilots for timing and frequency estimation does not transform them into "cell-specific pilots."

67. Second, even though Ketchum's receivers use the beacon pilot to estimate the frequency and timing of the transmitter that transmitted a given signal, they do so in a "blind" manner without even knowing which specific transmitter is the one that transmitted the signal in question. Instead, as I explain below, the receiver simply applies the timing and frequency offset of the beacon pilot to the data that was transmitted with it, without regard to, or any specific knowledge of, whichever one of the many transmitters that may have sent the signal.

68. In Ketchum, the same beacon signal is transmitted with each TDD frame. Ex. 1006 [Ketchum] [0216]. Because the beacon signal is a known, "defined set" of symbols (Ex. 1030 [Ketchum Provisional] [1088]), the receiver can use the beacon signal to determine the timing and frequency of the transmitter that transmitted the signal. In doing so, the receiver does not even need to know

(and there is no evidence that it does know), which specific one of the many system transmitters have transmitted the signal in question. Instead, the receiver blindly uses the pilot to adjust the data signals received with it, without any idea of which transmitter transmitted the signal or any transmitter-specific information. The pilot symbols convey no cell-specific information to the receiver, and in fact the receiver does not even know which transmitter transmitted the pilot. *Compare* Ex. 1001 ['512 Patent] 3:17-19 ("cell-specific pilots" contain "information unique to each individual cell"); 1:50-51 ("cell-specific information that is unique to a particular cell ….").

69. Furthermore, I understand from counsel that all claim terms are presumed to have meaning in a claim. If Ketchum's universal set of beacon pilots were "cell-specific pilots" within the meaning of the Claims by virtue of merely having been sent from different transmitters, then the limitation "wherein the first pilots are cell-specific pilots" would be superfluous. This is because the Claims already require the transmitter to "insert first pilots of a first type onto a first plurality of subcarriers." Ex. 1001 ['512 Patent] cl. 1. Thus, the Claims already recite the transmission of the first type from the transmitter. If that is all there were required from the Claims, and if an identical set of pilots transmitted from all cells

is all that were needed, then the Claims did not need to recite "wherein the first pilots are cell-specific pilots."

70. For at least the reasons I explained above, Ketchum's beacon pilots are not "cell-specific pilots" within the meaning of the Claims.

71. As I noted above, Petitioner argues in the alternative that a POSITA would have been motivated to modify Ketchum in view of Li to utilize cell-specific pilots. Pet., 62-63. But this alternative also fails because Petitioner has not presented any motivation as to why the POSITA would have modified Ketchum to utilize cell-specific pilots.

72. First, Li itself does not disclose, and Petitioner does not point to any disclosure in Li regarding, why it may be desirable for the pilots to be different for different cells, or any other explanation or suggestion that would motivate the POSITA to modify Ketchum in view of Li. Instead, all that Li discloses is that the pilot signal "may" be different for different cells: "The pilot symbols ***may be*** different for different cells (or sectors)." Ex. 1007 [Li] [0028] (*cited* by Pet., 62).

73. I also do not see any additional analysis from Petitioner beyond what Li itself discloses as to why a POSITA would have been motivated to modify Ketchum in view of Li to utilize cell-specific pilots. As Petitioner itself notes, Ketchum is already able to obtain the timing and frequency of the received data

frame through its own generic "beacon pilots." *See, e.g.*, Pet., 61. Ketchum also utilizes multiple other types of pilots that allow its system to achieve all of its necessary functions. *See* Ex. 1006 [Ketchum] Table 1 (describing MIMO Pilot, Steered Reference Pilot and Carrier Pilot). Petitioner does not identify any shortcoming in Ketchum, or any improvement as a result of its combination with Li, or any other reason why a POSITA would have been motivated to modify Ketchum's own fully-functioning system to utilize cell-specific pilots.

74. Petitioner presents a generic discussion of why the POSITA would have implemented (in Petitioner's view) Ketchum in view of Li as a cellular system using OFDMA communication techniques. *See, e.g.*, Pet., 63 ("A POSA would have been motivated to implement Ketchum's communication as a cellular system using OFDMA communication techniques, as explained above in §VIII.B.1"). But even if Petitioner's generic discussion were correct, I do not see any explanation and analysis from Petitioner as to why, if Ketchum is modified to be implemented as a cellular OFDMA system, the POSITA would have been motivated to further modify it to utilize cell-specific pilots.

75. For example, Petitioner argues that Ketchum discloses an OFDM system, and a POSITA would have been motivated to implement it using OFDMA as disclosed in Li because "OFDMA was one of a finite number of identified,

predictable solutions for implementing multiple-access in an OFDM system …." Pet., 54-55. But, as I noted in the preceding paragraph, this does not provide any motivation for ***further*** modifying Ketchum beyond using OFDMA to utilize cell-specific pilots. For example, Petitioner does not, and cannot, claim that utilizing cell-specific pilots is inherently required in an OFDMA system. Li itself states that the pilots "may" be, but do not have to be, specific to each cell. Ex. 1007 [Li] [0028]. The Patent also teaches that some prior art OFDMA systems utilize cell-specific pilot *patterns*, and not cell-specific pilots. Ex. 1001 ['512 Patent] 1:62-2:2. As another example, as I explained in connection with Petitioner's Ground 1 above, Petitioner's own Kim reference utilizes cell-specific pilot patterns, but not cell-specific pilots. In short, that a POSITA may implement Ketchum as a cellular OFDMA system is not shown to have any bearing on why a POSITA would further modify Ketchum to utilize cell-specific pilots, when it already has at least four types of pilots that allow it to fully and effectively function.

76. Petitioner's argument that a POSITA would have implemented Ketchum as a "cellular" system fails for similar reasons as above. Pet., 55. There is simply no analysis or discussion of why implementing Ketchum as a cellular OFDMA system would provide a motivation to further modify Ketchum to implement cell-specific pilots.

77. For at least the reasons I explained above, Petitioner has not shown that Ketchum discloses "cell-specific pilots," or why a POSITA would modify Ketchum in view of Li to implement "cell-specific pilots."

2. Ground 2 Does Not Disclose That The Plurality Of First And Second Claimed Subcarriers Are Both Transmitted "In At Least One Of The Time Slots."

78. The Claims recite that "the plurality of antennas [are] configured to transmit the first plurality of subcarriers and the second plurality of subcarriers in at least one of the time slots." Ex. 1001 ['512 Patent] cl. 1. As I will explain below, a POSITA would understand this limitation to require that there must be at least one time slot that contains both "the first plurality of subcarriers ***and*** the second plurality of subcarriers."

79. The plain meaning of the claims requires that there be "at least one time slot" where "the first plurality of subcarriers ***and*** the second plurality of subcarriers" are both transmitted. In other words, both subcarriers should be transmitted in a single time slot for at least one time slot.

80. I do not see any analysis or argument from Petitioner to interpret the claims any differently. In fact, Petitioner appears to apply the same understanding as Patent Owner to the claims. *See, e.g.*, Pet., 35-36 (arguing in Ground 1 that "the

first and second plurality of subcarriers are implemented within a single OFDM symbol, and ***transmitted in a single time slot***").

81. For completeness, however, I note that if the Claims were interpreted to merely require that the signals generally be transmitted in one or more time slots, this entire limitation would be superfluous. This is because pilots, as with any other signal, are necessarily transmitted in some time slot, and transmitting them in one or more time slots does not add any meaningful limitation to the Claims.

82. This plain meaning reading of the Claims accords with the embodiments in the '512 Patent's specification. For example, the '512 Patent's Fig. 5, reproduced below, is a frequency-domain depiction of a transmission from cell p, showing common pilots (c), cell specific pilots (s) and data (shorter arrows) all being transmitted at different frequencies at the time of transmission:

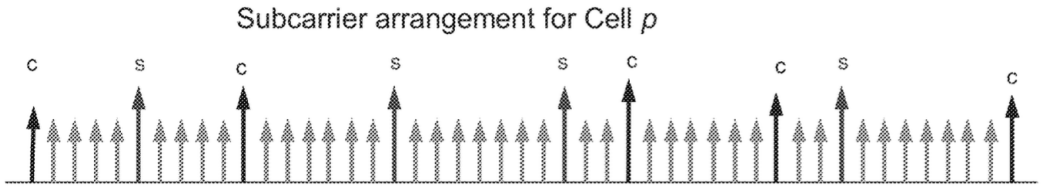

Ex. 1001 ['512 Patent] Fig. 5; *see also id*., 5:34-38.

83. Petitioner's Ground 2 relies exclusively on Ketchum for the disclosure of this limitation. Pet., 66-67. However, Ketchum does not disclose this limitation under Petitioner's own mapping, as I will explain below.

84. Petitioner maps the claimed "time slot" to each OFDM symbol period in Ketchum. Pet., 66 ("sent during respective OFDM symbol periods (***i.e., time slots***) within the 'time duration'"); 57 ("The OFDM symbols are sent in particular ***time slots*** in the time domain (*e.g.*, ***during an 'OFDM symbol period'***)."). Therefore, Petitioner must show that Ketchum's beacon pilots (which Petitioner maps to the claimed "cell-specific pilot"), the steered reference pilots (which Petitioner maps to the claimed second type of pilot), and traffic data, all are transmitted during a single OFDM symbol period for at least one period.

85. Petitioner does not show that this limitation is met as properly understood and, in fact, Petitioner, in connection with a different limitation, admits that this limitation is not met under Petitioner's mapping.[2]

---

[2] My analysis is limited to opining on whether Petitioner's ground 2, under Petitioner's own mapping of the claims, discloses this limitation. I have not been asked to analyze any other mapping of the references. For example, in my

86. Petitioner relies on Ketchum's Fig. 2 (reproduced below) to argue that the beacon pilot, steered reference pilot and data (FCH) are transmitted during the same symbol period:

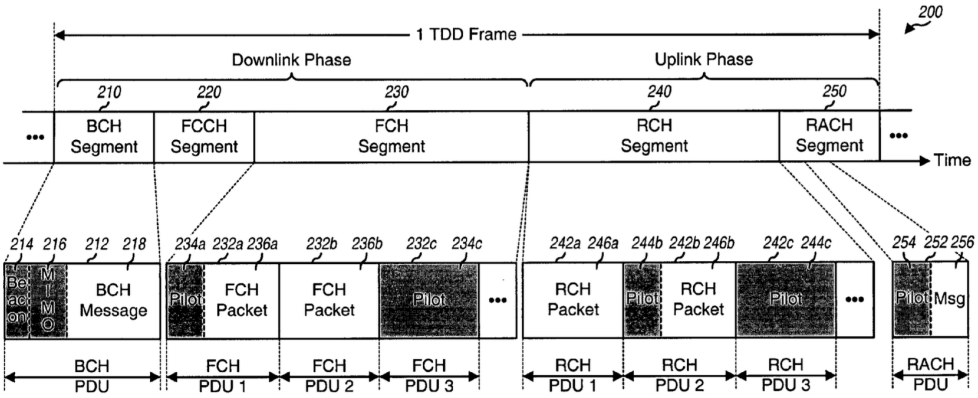

FIG. 2

Ex. 1006 [Ketchum] Fig. 2 (reproduced by Pet., 67).

87. As shown on the figure itself, Ketchum's Fig. 2 depicts a single TDD frame. Ex. 1006 [Ketchum] [0017], [0103]. Ketchum explains that "[t]he frame structure and transport channels shown in FIG. 2 are described in detail" in its

---

analysis, I have applied Petitioner's mapping of the claimed "time slot" to a "symbol period" in Ketchum. I have not been asked to opine, and do not opine, on whether, for example, a "symbol period" in fact discloses a "time slot" as properly construed.

provisional patent application. *Id*., [0104]. The Ketchum provisional is clear that each TDD frame contains ***approximately 500 OFDM symbols*** (each of which is mapped by Petitioner to a different "time slot"):

> [T]he duration of each TDD frame is fixed at 2 msec, and the number of OFDM symbols per TDD frame is a function of the length of the cyclic prefix used for the OFDM symbols. The BCH has a fixed duration of 80 µsec and uses the 800 nsec cyclic prefix for the OFDM symbols transmitted. ***The remainder of the TDD frame contains 480 OFDM symbols if the 800 nsec cyclic prefix is used, and 533 OFDM symbols plus 1.2 µsec of excess time if the 400 nsec cyclic prefix is used.***

Ex. 1030 [Ketchum Provisional] [1080].

88. There is simply no disclosure in Ketchum that the beacon pilots, the steered reference pilots and data are all transmitted during the same symbol period. To the contrary, it is clear from Ketchum's own Fig. 2 (annotated) that the beacon pilot (yellow), steered reference pilot (red) and data (blue) are located at different parts of the frame and even in different protocol data units, and are thus transmitted at different times:

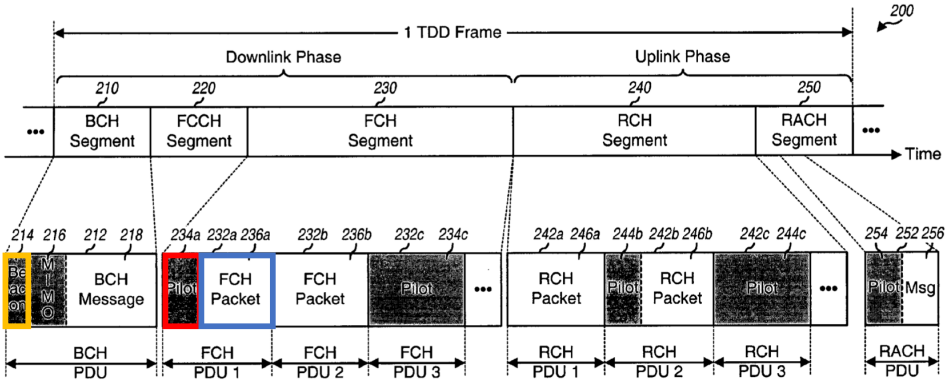

FIG. 2

See also Ex. 1006 [Ketchum] [0101] ("For example, an FCH PDU 232a includes a portion 234a for a pilot and a portion 236a for a data packet").

89. I note that, to argue that Ketchum discloses a different limitation, (1.6), Petitioner took the position that Ketchum ***fails*** to disclose the instant limitation under Petitioner's mapping because its pilots are transmitted during ***different*** (not the same) symbol periods:

> The beacon pilots do not interfere with the steered reference pilots because the beacon pilots ***are transmitted during different time periods*** than the steered reference pilots ….

Pet., 68.

90. Petitioner also states that beacon pilots "are transmitted in symbol periods corresponding to transmission of a 'BCH protocol data unit (PDU) 212.'" Pet., 67. In other words, referring to Ketchum Fig. 2, annotated below, Petitioner

appears to argue that the beacon pilots (yellow) are transmitted as a part of the BCH PDU (red):

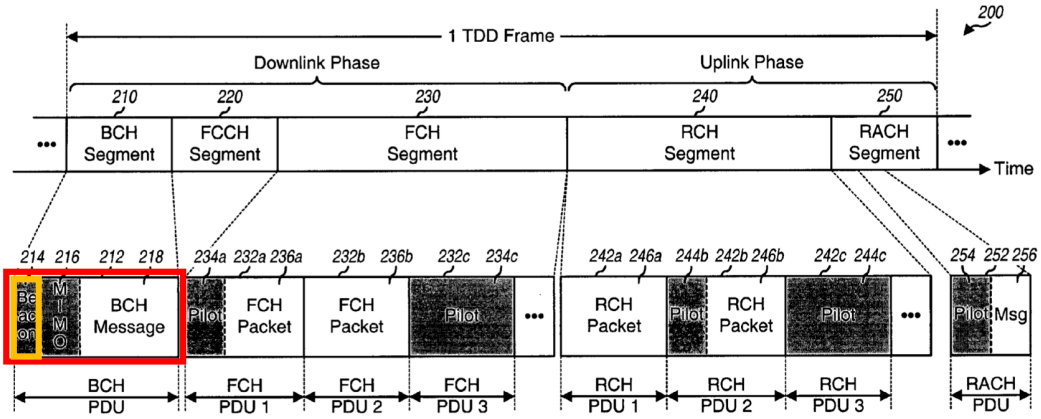

FIG. 2

91. Petitioner's statement, even if true, does not show that Ketchum discloses the claims under Petitioner's mapping. As noted above, the Petition has mapped the claimed "time slot" to an OFDM symbol period, not to a given PDU. Pet., 57, 66-67. That both the beacon pilot and BCH message are transmitted in the same PDU of a TDD frame has no bearing on whether they are transmitted in the same "time slot" under Petitioner's mapping that each time slot corresponds to an OFDMA symbol period.

92. Furthermore, as noted above, the BCH itself "has a fixed duration of 80 µsec," Ex. 1030 [Ketchum Provisional] [1080], which contains many symbols. In fact, even if the BCH did not have a fixed duration of 80 µsec, it would contain

at least three symbols, one for the beacon pilot, one for the MIMO pilot, and one for the BCH message, as shown in Ketchum's Fig. 2. Thus, the beacon pilot and the BCH message would not be transmitted during the same symbol period.

93. Additionally, even though the Petition has mapped the claimed "time slot" to a symbol period, one were to deem the "BCH PDU" to constitute a "time slot," the mapping still fails because the BCH PDU only contains the beacon pilot and BCH Message, but does not contain, for example, the steered reference pilot that the Petition maps to the claimed "second type of pilot" and must also be transmitted in the same time slot. Pet., 63.

94. Petitioner's subsequent statement that both the "[s]teered reference pilots and data are transmitted" during the transmission of "one or more FCH PDUs 232" fails for similar reasons. Pet., 67

95. For at least the reasons I explained above, Petitioner does not show that its Ground 2 and, more specifically, Ketchum, discloses the claim limitation requiring that "the plurality of antennas [are] configured to transmit the first plurality of subcarriers and the second plurality of subcarriers in at least one of the time slots."

VI. CONCLUSION

96. For the foregoing reasons, based on my expertise and experience and the record of this case that I have reviewed, it is my opinion that the Challenged Claims are not shown to be disclosed or obvious.

97. I understand that my opinions discussed above support a legal conclusion that the challenged claims are nonobvious.

I hereby declare that all statements made herein of my own knowledge are true and all statements made herein on information and belief were and are believed by me to be true, and that all statements herein were and are made with the knowledge that willful false statements and the like so made are punishable by fine or imprisonment, or both, under section 1001 of Title 18 of the United States Code and that any such willful false statements may jeopardize the validity of the application or any patents issued thereon.

February 8, 2023

William P. Alberth, Jr.