UNITED STATES PATENT AND TRADEMARK OFFICE

BEFORE THE PATENT TRIAL AND APPEAL BOARD

VOLKSWAGEN GROUP OF AMERICA, INC.,
Petitioner,

v.

NEO WIRELESS LLC,
Patent Owner.

Case No. IPR2022-01537
U.S. Patent No. 10,075,941

DECLARATION OF SARAH KATE WILSON, PHD

Mail Stop "PATENT BOARD"
Patent Trial and Appeal Board
U.S. Patent & Trademark Office
P.O. Box 1450
Alexandria, VA 22313-1450

TABLE OF CONTENTS

I. INTRODUCTION 1
II. GROUNDS OF UNPATENTABILITY 2
II. QUALIFICATIONS 3
III. MATERIALS CONSIDERED 5
IV. LEGAL STANDARDS 9
A. My Understanding of Claim Construction 9
B. My Understanding of Obviousness 10
C. My Understanding of a Person Having Ordinary Skill in the Art 12
V. OVERVIEW OF THE ’941 PATENT 13
A. Prosecution History of the ’941 Patent 18
B. IPR2021-01468 of the ’941 Patent 20
C. Level of Ordinary Skill in the Art 23
D. Claim Construction 24
VI. Background of the Technology 25
A. Orthogonal Frequency Division Multiplexing (OFDM) Communication Systems Were Well-known 26
B. Adapting to Channel Conditions Was Well-known 36
C. Transmitting a Control Message over a Control Channel Was Well-known 40
D. Transmission Diversity and Multiple-Input Multiple-Output (MIMO) Antenna Schemes Were Well-known 42
E. Distributed and Localized Subchannel Configurations Were Well-known 49
VII. OVERVIEW OF THE APPLIED REFERENCES. 56
A. 802.16a 56
B. Heath 67
C. Walton040 74
D. Li017 79

Ford Motor Co.
Exhibit 1003
Page 002

E. Tufvesson 83

VIII. GROUND 1: Claims 1-14 are unpatentable under 35 U.S.C. § 103 as obvious over 802.16a, alone or in combination with Heath.....87

A. A POSITA would have been motivated to combine 802.16a-2001 and 802.16a-2003 87

B. A POSITA would have been motivated to combine 802.16a and Heath.....88

C. 802.16a, alone or in view of Heath, renders obvious claim 1 99

1. Claim 1 Preamble (Element [1A]): A link adaptation method by a base station serving a plurality of mobile stations in an Orthogonal Frequency Division Multiplexing (OFDM) communication system, the communication system utilizing a transmission structure with time slots in the time domain and frequency subchannels in the frequency domain, the method comprising:.....101

2. Element [1B]: transmitting a control message to a mobile station over a control channel, wherein: 104

3. Element [1C]: the control message contains transmission parameters allocated to the mobile station for a subsequent transmission of data by the base station over a frequency subchannel to the mobile station in a time slot; and.....110

4. Element [1D]: the mobile station-specific transmission parameters indicate an antenna transmission scheme.....114

5. Element [1E]: the mobile station-specific transmission parameters indicate … a corresponding subchannel configuration 118

6. Element [1F]: the antenna transmission scheme comprising a transmission diversity scheme or a multiple-input multiple-output (MIMO) scheme 122

7. Element [1G]: the corresponding subchannel configuration characterized by distributed subcarriers or localized subcarriers in the frequency domain.....126

8. Element [1H]: transmitting a data packet to the mobile station over the frequency subchannel in accordance with the mobile station-specific transmission parameters. 133

D. 802.16a in view of Heath renders obvious claim 6 136

1. Claim 6 Preamble (Element [6A]): A base station serving a plurality of mobile stations in an Orthogonal Frequency Division Multiplexing (OFDM) communication system, the communication system utilizing a transmission structure with time slots in the time domain and frequency subchannels in the frequency domain, the base station comprising a transmitter configured to: 138
2. Element [6B]: transmit a control message to a mobile station over a control channel, wherein: 138
3. Element [6C]: the control message contains transmission parameters allocated to the mobile station for a subsequent transmission of data by the base station over a frequency subchannel to the mobile station in a time slot; and 138
4. Element [6D]: the mobile station-specific transmission parameters indicate an antenna transmission scheme 138
5. Element [6E]: the mobile station-specific transmission parameters indicate … a corresponding subchannel configuration 139
6. Element [6F]: the antenna transmission scheme comprising a transmission diversity scheme or a multiple-input multiple-output (MIMO) scheme 139
7. Element [6G]: the corresponding subchannel configuration characterized by distributed subcarriers or localized subcarriers in the frequency domain 139
8. Element [6H]: transmitting a data packet to the mobile station over the frequency subchannel in accordance with the mobile station-specific transmission parameters. 139

E. 802.16a in view of Heath renders obvious claim 8 140

1. Claim 8 Preamble (Element [8A]): A link adaptation method by a mobile station served by a serving base station in an Orthogonal Frequency Division Multiplexing (OFDM) communication system, the communication system utilizing a transmission structure with time slots in the time domain and frequency subchannels in the frequency domain, the method comprising: 141

Ford Motor Co.
Exhibit 1003
Page 004

2. Element [8B]: receiving a control message from the serving base station over a control channel, wherein: 142

3. Element [8C]: the control message contains transmission parameters specific to the mobile station for a subsequent transmission by the serving base station over a frequency subchannel to the mobile station in a time slot; and 143

4. Element [8D]: the mobile station-specific transmission parameters indicate an antenna transmission scheme 143

5. Element [8E]: the mobile station-specific transmission parameters indicate … a corresponding subchannel configuration 143

6. Element [8F]: the antenna transmission scheme comprising a transmission diversity scheme or a multiple-input multiple-output (MIMO) scheme 144

7. Element [8G]: the corresponding subchannel configuration characterized by distributed subcarriers or localized subcarriers in the frequency domain.....144

8. Element [8H]: receiving a data packet transmitted by the serving base station using the mobile station-specific transmission parameters over the frequency subchannel.....144

F. 802.16a in view of Heath renders obvious claim 13 144

1. Claim 13 Preamble (Element [13A]): A mobile station served by a serving base station in an Orthogonal Frequency Division Multiplexing (OFDM) communication system, the communication system utilizing a transmission structure with time slots in the time domain and frequency subchannels in the frequency domain, the mobile station comprising a receiver configured to: 146

2. Element [13B]: receive a control message from the serving base station over a control channel, wherein: 146

3. Element [13C]: the control message contains transmission parameters specific to the mobile station for a subsequent transmission by the serving base station over a frequency subchannel to the mobile station in a time slot; and 146

4. Element [13D]: the mobile station-specific transmission parameters indicate an antenna transmission scheme 147

5. Element [13E]: the mobile station-specific transmission parameters indicate … a corresponding subchannel configuration 147

6. Element [13F]: the antenna transmission scheme comprising a transmission diversity scheme or a multiple-input multiple-output (MIMO) scheme 147

7. Element [13G]: the corresponding subchannel configuration characterized by distributed subcarriers or localized subcarriers in the frequency domain..... 147

8. Element [13H]: receive a data packet transmitted by the serving base station using the mobile station-specific transmission parameters over the frequency subchannel. 148

G. 802.16a in view of Heath renders obvious claim 2 148

H. 802.16a in view of Heath renders obvious claim 3 152

I. 802.16a in view of Heath renders obvious claim 4 153

J. 802.16a in view of Heath renders obvious claim 5 156

K. 802.16a in view of Heath renders obvious claim 7 160

L. 802.16a in view of Heath renders obvious claim 9 161

M. 802.16a in view of Heath renders obvious claim 10 161

N. 802.16a in view of Heath renders obvious claim 11 161

O. 802.16a in view of Heath renders obvious claim 12 162

P. 802.16a in view of Heath renders obvious claim 14 162

IX. GROUND 2: Claims 1-13 are unpatentable under 35 U.S.C. § 103 as obvious over Walton040 in view of Li017 162

A. A POSITA would have been motivated to combine Walton040 and Li017 162

B. Walton040 in view of Li017 renders obvious claim 1 178

1. Claim 1 Preamble (Element [1A]): A link adaptation method by a base station serving a plurality of mobile stations in an Orthogonal Frequency Division Multiplexing (OFDM) communication system, the communication system utilizing a transmission structure with time slots in the time domain and

frequency subchannels in the frequency domain, the method comprising:.....178

2. Element [1B]: transmitting a control message to a mobile station over a control channel, wherein: 181

3. Element [1C]: the control message contains transmission parameters allocated to the mobile station for a subsequent transmission of data by the base station over a frequency subchannel to the mobile station in a time slot; and.....184

4. Element [1D]: the mobile station-specific transmission parameters indicate an antenna transmission scheme.....189

5. Element [1E]: the mobile station-specific transmission parameters indicate … a corresponding subchannel configuration 191

6. Element [1F]: the antenna transmission scheme comprising a transmission diversity scheme or a multiple-input multiple-output (MIMO) scheme 198

7. Element [1G]: the corresponding subchannel configuration characterized by distributed subcarriers or localized subcarriers in the frequency domain.....203

8. Element [1H]: transmitting a data packet to the mobile station over the frequency subchannel in accordance with the mobile station-specific transmission parameters. 203

C. Walton040 in view of Li017 renders obvious claim 6.....206

1. Claim 6 Preamble (Element [6A]): A base station serving a plurality of mobile stations in an Orthogonal Frequency Division Multiplexing (OFDM) communication system, the communication system utilizing a transmission structure with time slots in the time domain and frequency subchannels in the frequency domain, the base station comprising a transmitter configured to: 206

2. Element [6B]: transmit a control message to a mobile station over a control channel, wherein:.....207

3. Element [6C]: the control message contains transmission parameters allocated to the mobile station for a subsequent transmission of data by the base station over a frequency subchannel to the mobile station in a time slot; and.....207

4. Element [6D]: the mobile station-specific transmission parameters indicate an antenna transmission scheme.....207

5. Element [6E]: the mobile station-specific transmission parameters indicate … a corresponding subchannel configuration 207

6. Element [6F]: the antenna transmission scheme comprising a transmission diversity scheme or a multiple-input multiple-output (MIMO) scheme 207

7. Element [6G]: the corresponding subchannel configuration characterized by distributed subcarriers or localized subcarriers in the frequency domain.....208

8. Element [6H]: transmitting a data packet to the mobile station over the frequency subchannel in accordance with the mobile station-specific transmission parameters. 208

D. Walton040 in view of Li017 renders obvious claim 8.....208

1. Claim 8 Preamble (Element [8A]): A link adaptation method by a mobile station served by a serving base station in an Orthogonal Frequency Division Multiplexing (OFDM) communication system, the communication system utilizing a transmission structure with time slots in the time domain and frequency subchannels in the frequency domain, the method comprising:.....208

2. Element [8B]: receiving a control message from the serving base station over a control channel, wherein:.....209

3. Element [8C]: the control message contains transmission parameters specific to the mobile station for a subsequent transmission by the serving base station over a frequency subchannel to the mobile station in a time slot; and.....210

4. Element [8D]: the mobile station-specific transmission parameters indicate an antenna transmission scheme.....210

5. Element [8E]: the mobile station-specific transmission parameters indicate … a corresponding subchannel configuration 210

6. Element [8F]: the antenna transmission scheme comprising a transmission diversity scheme or a multiple-input multiple-output (MIMO) scheme 210

Ford Motor Co.
Exhibit 1003
Page 008

7. Element [8G]: the corresponding subchannel configuration characterized by distributed subcarriers or localized subcarriers in the frequency domain.....211

8. Element [8H]: receiving a data packet transmitted by the serving base station using the mobile station-specific transmission parameters over the frequency subchannel.....211

E. Walton040 in view of Li017 renders obvious claim 13.....211

1. Claim 13 Preamble (Element [13A]): A mobile station served by a serving base station in an Orthogonal Frequency Division Multiplexing (OFDM) communication system, the communication system utilizing a transmission structure with time slots in the time domain and frequency subchannels in the frequency domain, the mobile station comprising a receiver configured to:.....211

2. Element [13B]: receive a control message from the serving base station over a control channel, wherein:.....212

3. Element [13C]: the control message contains transmission parameters specific to the mobile station for a subsequent transmission by the serving base station over a frequency subchannel to the mobile station in a time slot; and.....212

4. Element [13D]: the mobile station-specific transmission parameters indicate an antenna transmission scheme.....212

5. Element [13E]: the mobile station-specific transmission parameters indicate … a corresponding subchannel configuration.....212

6. Element [13F]: the antenna transmission scheme comprising a transmission diversity scheme or a multiple-input multiple-output (MIMO) scheme.....212

7. Element [13G]: the corresponding subchannel configuration characterized by distributed subcarriers or localized subcarriers in the frequency domain.....213

8. Element [13H]: receive a data packet transmitted by the serving base station using the mobile station-specific transmission parameters over the frequency subchannel.....213

F. Walton040 in view of Li017 renders obvious claim 3.....213

Ford Motor Co.
Exhibit 1003
Page 009

G. Walton040 in view of Li017 renders obvious claim 4 215

H. Walton040 in view of Li017 renders obvious claim 5 216

I. Walton040 in view of Li017 renders obvious claim 7 219

J. Walton040 in view of Li017 renders obvious claim 10 219

K. Walton040 in view of Li017 renders obvious claim 11 219

L. Walton040 in view of Li017 renders obvious claim 12 219

M. Walton040 in view of Li017 renders obvious claim 14 220

X. GROUND 3: Claims 2 and 9 are unpatentable under 35 U.S.C. § 103 as obvious over Walton040 in view of Li017 and Tufvesson 220

A. A POSITA would have been motivated to combine Walton040 and Li017 and Tufvesson 220

B. Walton040 in view of Li017 and Tufvesson renders obvious claim 2 225

C. Walton040 in view of Li017 and Tufvesson renders obvious claim 9 226

Ford Motor Co.
Exhibit 1003
Page 010

I, Sarah Kate Wilson, declare as follows:

I. INTRODUCTION

1. I have been retained by Sterne, Kessler, Goldstein & Fox P.L.L.C. on behalf of Volkswagen Group of America ("VWGoA" and/or "Petitioner") for the above-captioned *inter partes* review proceeding. I understand that this proceeding involves U.S. Patent No. 10,075,941 (EX1001, "the '941 Patent"), which is entitled "Methods and Apparatus for Multi-Carrier Communication Systems with Adaptive Transmission and Feedback," and that the '941 patent is currently assigned to Neo Wireless LLC ("Patent Owner").

2. Specifically, I have been retained as a technical expert by VWGoA to study and provide my opinions on the technology claimed in, and the patentability or unpatentability of, claims 1-14 of the '941 patent ("the Challenged Claims"). This declaration is directed to the challenged claims of the '941 patent, and sets forth the opinions I have formed, the conclusions I have reached, and the bases for each. For purposes of this declaration, I was not asked to provide any opinions that are not expressed herein.

3. I am familiar with the technology described in the '941 patent as of its earliest possible priority date of February 13, 2004. I have been asked to provide my technical review, analysis, insights, and opinions regarding the '941 patent. I have used this experience and insight along with the references identified herein as the

Ford Motor Co.
Exhibit 1003
Page 011

basis for my opinions that support the grounds of unpatentability set forth in the Petition for *Inter Partes* Review of the ’941 patent.

4. I have reviewed and am familiar with the specification of the ’941 patent issued on September 11, 2018. I understand that the ’941 patent has been provided as EX1001. I will cite to the specification using the following formats: EX1001, ’941 patent, 1:1-10 (long form) and EX1001, 1:1-10 (short form). These example citations both point to the ’941 patent specification at column 1, lines 1-10.

5. I am being compensated by VWGoA at my standard hourly rate for the time I spend in connection with this proceeding. My compensation is not dependent in any way on the substance of my opinions or in the outcome of this proceeding.

II. GROUNDS OF UNPATENTABILITY

6. In forming my opinions about the ’941 patent, I have considered the following grounds of unpatentability. Based on my review of the prior art references that form the basis of these grounds, it is my opinion that claims 1-14 of the ’941 patent would have been obvious to a person of ordinary skill in the art (“POSITA”) as of February 13, 2004.

Ground	Basis	Claims	References
1.	§ 103	1-14	802.16a + Heath
2.	§ 103	1, 3-8, 10-14	Walton040 + Li017
3.	§ 103	2, 9	Walton040 + Li017 + Tufvesson

7. I have been asked to consider how a POSITA would have understood the challenged claims in light of the disclosures of the ’941 patent. I also have been asked to consider how a POSITA would have understood the prior art references 802.16a, Heath, Walton040, Li017, and Tufvesson. Further, I have been asked to consider and provide my technical review, analysis, insights, and opinions regarding whether a POSITA would have understood that the combinations of the prior art references listed in the table above render obvious claims 1-14 of the ’941 patent.

II. QUALIFICATIONS

8. In formulating my opinions, I have relied upon my training, knowledge, and experience in the relevant art. I have over 32 years of experience working with wireless communication systems, and 30 years specifically working with OFDM systems. As detailed below, I have worked on many projects that are highly relevant to the subject matter of the ’941 patent.

9. In particular, I have experience in the field of wireless communications through my education, my research work and my teaching. I earned a Bachelor of Arts in mathematics with honors from Bryn Mawr College in 1979. After working in industry as a programmer/analyst for the IIT Research Institute and SRI International, I went back to school at Stanford University and earned a Master’s in Electrical Engineering. I then worked for a medical electronics company as a signal

Ford Motor Co.
Exhibit 1003
Page 013

processing engineer and in 1989 returned to Stanford to pursue my Ph.D. in Electrical Engineering in wireless communications; my thesis was on Orthogonal Frequency Division Multiplexing (OFDM).

10. Since graduating from Stanford with my Ph.D., I have published over 60 journal and conference papers in digital communications, two book chapters, and edited one book on transmission techniques for wireless communications. My research has focused mainly on OFDM and has spanned the areas of cellular communications, wireless LANs, digital subscriber lines (DSL), LiFi and underwater communications. I am a joint inventor on three US Patents, one on smart antennas and two on DSL.

11. I have researched wireless communications and taught both undergraduate and graduate courses in digital and wireless communications at universities in the United States (Stanford University, Purdue University, and Santa Clara University) and Sweden (Lulea University of Technology and the Royal Institute of Technology). I also worked in industry at Agilent Laboratories, and ArrayComm, a smart antenna company. I have also consulted for companies. While a researcher at Lulea University of Technology in the late 90's I worked with my students on OFDM; we published papers that have been heavily cited including one on multiple access for OFDM in cellular system. During the period of 2005-2006, I consulted for Texas Instruments on the LTE standard, working on modeling the

physical layer and on handover schemes. Since 2006, I have been teaching at Santa Clara University in the Electrical and Computer Engineering Department where I am a full professor.

12. I have worked within my professional society, the IEEE Communications Society as an associate editor for top-tier journals. From 2009-2011, I was the Editor-in-Chief of IEEE Communications Letters. Then from 2012-2013, I was Director of Journals and from 2014-2015 I was the Vice-President for Publications for the IEEE Communications Society.

13. My community has acknowledged this work through awards. I became an IEEE Fellow in 2014 "for contributions to OFDM." I also received the Joseph LoCicero Award for Exemplary Service to Publications, "For sustained and innovative contributions to Publications" in 2017 from the IEEE Communications Society. In 2018, I was awarded the IEEE Education Society Harriett B. Rigas award for "for excellence in communications engineering, education and promoting equity."

14. A copy of my *curriculum vitae* is provided as EX10XX, which contains further details on my experience, technical expertise, and other qualifications.

III. MATERIALS CONSIDERED

15. In formulating my opinions, I have relied upon my training, knowledge, and experience that are relevant to the '941 patent. Furthermore, I have considered

specifically the following documents listed below in addition to any other documents cited in this declaration:

Exhibit	Description
1001	U.S. Patent No. 10,075,941 B2 to Li et al. ("the '941 patent")
1002	Prosecution History of U.S. Patent No. 10,075,941 ("Prosecution History")
1004	*Curriculum Vitae* of Sarah Kate Wilson, PhD
1005	IEEE Std 802.16-2001 "IEEE Standard for Local and metropolitan area networks Part 16: Air Interface for Fixed Broadband Wireless Access Systems" ("802.16a-2001")
1006	IEEE Std 802.16-2003 "IEEE Standard for Local and metropolitan area networks Part 16: Air Interface for Fixed Broadband Wireless Access Systems Amendment 2: Medium Access Control Modifications and Additional Physical Layer Specifications for 2-11 GHz" ("802.16a-2003")
1007	U.S. Patent No. 6,937,592 B1 to Heath, Jr. et al. ("Heath")
1008	U.S. Patent Application Publication 2003/0125040 to Walton et al. ("Walton040")
1009	U.S. Patent Application Publication 2002/0147017 to Li et al. ("Li017")
1010	F. Tufvesson, "Pilot Assisted Channel Estimation for OFDM in Mobile Cellular Systems," 1997 IEEE 47th Vehicular Technology Conference. Technology in Motion, May 4-7, 1997 ("Tufvesson")
1011	Carl Eklund, "IEEE Standard 802.16: A Technical Overview of the WirelessMAN™ Air Interface for Broadband Wireless Access," *IEEE Communications Magazine* June 2002
1012	E. Lawrey, "Multiuser OFDM," Fifth International Symposium on ignal Processing and its Applications, ISSPA '99, Brisbane, Australia, 22-25 August, 1999. ("Lawrey")

Exhibit	Description
1013	Declaration of Gordon MacPherson regarding "802.16-2001 - IEEE Standard for Local and Metropolitan Area Networks - Part 16: Air Interface for Fixed Broadband Wireless Access Systems, April 8, 2002."
1014	Declaration of Gordon MacPherson regarding "802.16a-2003 - Standard for Amendment to IEEE Standard for Local and Metropolitan Area Networks - Part 16: Air Interface for Fixed Broadband Wireless Access Systems - Medium Access Control Modifications and Additional Physical Layer Specifications for 2-11 GHz, April 1, 2003."
1015	U.S. Patent No. 7,436,757 B1 to Wilson ("Wilson")
1016	Petition for *Inter Partes* Review IPR2021-01468
1017	U.S. Patent No. 9,473,269 ("Walton269")
1018	U.S. Patent No. 6,947,748 ("Li748")
1019	U.S. Patent Apl. Pub No. 2004/0165683 ("Gupta")
1020	PCT Patent Apl. Pub No. WO 02/093819 ("PCT819")
1021	U.S. Patent No. 6,400,699 ("Airy")
1022	Decision Denying Institution of *Inter Partes* Review IPR2021-01468
1023	P. Monsen, "Theoretical and Measured Performance of a DFE Model on a Fading Multipath Channel," *IDDD Transactions on Communciations*, Vol. Com-25, No. 10, Oct. 1977, pp. 1144-1153.
1024	B. Salzberg, "Performance of an efficient parallel data transmission system," *IEEE Transactions on Communications Technology*. Vol. 15, No. 6, 1967 pp. 805-811.
1025	S. Weinstein, P. Ebert, "Data transmission by frequency-division multiplexing using the discrete Fourier Transform," *IEEE Transactions on Communications Technology*, Vol. 19, No. 4, 1971, pp. 628-634.

Exhibit	Description
1026	L. Cimini, "Analysis and Simulation of a Digital Mobile Channel Using Orthogonal Frequency Division Multiplexing," *IEEE Transactions on Communications*, vol. 33, no. 7, July 1985, pp. 665-675.
1027	J. Bingham, *Theory and Practice of Modem Design*, John Wiley and Sons, 1988.
1028	P. S. Chow, J. C. Tu and J. M. Cioffi, "A multichannel transceiver system for asymmetric digital subscriber line service," *IEEE Global Telecommunications Conference GLOBECOM '91: Countdown to the New Millennium. Conference Record*, 1991, pp. 1992.
1029	B. LeFloch, R. Halbert-Lassalle, D. Castelain, "Digital sound broadcasting to mobile receivers," *IEEE Transactions on Consumer Electronics,* Vol. 35, No. 3, 1989, pp. 493-503.
1030	M. Aldinger, "Multicarrier COFDM scheme in high bitrate radio local area networks," 5th IEEE International Symposium on Personal, Indoor and Mobile Radio Communications, Wireless Networks - Catching the Mobile Future., Vol. 3, 1994, pp. 969-973.
1031	C. Reiners and H. Rohling, "Multicarrier transmission technique in cellular mobile communications systems," *Proceedings of IEEE Vehicular Technology Conference (VTC)*, vol.3, 1994, pp. 1645-1649.
1032	M. Wahlquist, C. Östberg, J. van de Beek, O. Edfors, and P. O. Börjesson, "A conceptual study of OFDM-based multiple access schemes: Part 1: Air interface requirements," Telia research AB, Luleå University of Technology, 1996.
1033	Declaration of Gordon MacPherson regarding "F. Tufvesson and T. Maseng; 'Pilot assisted channel estimation for OFDM in mobile cellular systems', 1997 IEEE 47th Vehicular Technology Conference. Technology in Motion, May 4 – 7, 1997."

Exhibit	Description
1034	Declaration of LiMin H. Fields regarding "F. Tufvesson and T. Maseng; 'Pilot assisted channel estimation for OFDM in mobile cellular systems', 1997 IEEE 47th Vehicular Technology Conference. Technology in Motion, May 4 – 7, 1997."
1035	Carl Eklund, "WirelessMAN Inside the IEEE 802.16™ Standard for Wireless Metropolitan Networks," 2006

16. To the best of my knowledge, the above-mentioned documents and materials are true and accurate copies of what they purport to be. An expert in the field would reasonably rely on them to formulate opinions such as those set forth in this declaration.

17. I have also relied upon various legal principles (as explained to me by VWGoA's counsel) in formulating my opinions. My understanding of these principles is summarized below.

IV. LEGAL STANDARDS

A. My Understanding of Claim Construction

18. I understand that during an *inter partes* review proceeding, claims are to be construed in light of the specification as would be read by a person of ordinary skill in the relevant art at the time the application was filed. I understand that claim terms are given their ordinary and customary meaning as would be understood by a person of ordinary skill in the relevant art in the context of the entire disclosure. A claim term, however, will not receive its ordinary meaning if the patentee acted as

his own lexicographer and clearly set forth a definition of the claim term in the specification. In this case, the claim term will receive the definition set forth in the patent.

B. My Understanding of Obviousness

19. I understand that a patent claim is invalid if the claimed invention would have been obvious to a person of ordinary skill in the art at the time the application was filed. I understand that this means that even if all of the requirements of the claim cannot be found in a single prior art reference that would anticipate the claim, the claim can still be invalid.

20. To obtain a patent, a claimed invention must have been, as of its priority date, nonobvious in view of the prior art in the field. I understand that a patent claim is obvious when the differences between the subject matter sought to be patented and the prior art are such that the subject matter as a whole would have been obvious at the time the invention was made to a person having ordinary skill in the art.

21. I understand that to prove that prior art or a combination of prior art renders a patent obvious, it is necessary to: (1) identify the particular references that, singly or in combination, render the patent obvious; (2) specifically identify which elements of the patent claim appear in each of the asserted references; and (3) explain how the prior art references could have been combined in order to create the inventions claimed in the asserted claim.

22. I also understand that prior art references can be combined under several different circumstances. For example, it is my understanding that one such circumstance is when a proposed combination of prior art references results in a system that represents a predictable variation, which is achieved using prior art elements according to their established functions.

23. I also understand that when considering the obviousness of a patent claim, one should consider whether a teaching, suggestion, or motivation to combine the references exists so as to avoid impermissibly applying hindsight when considering the prior art. I understand this test should not be rigidly applied, but that the test can be important to avoiding such hindsight.

24. I understand that certain objective indicia can be important evidence as to whether a patent is obvious or nonobvious. Such indicia include:
(1) commercial success of products covered by the patent claims; (2) a long-felt need for the invention; (3) failed attempts by others to make the invention;
(4) copying of the invention by others in the field; (5) unexpected results achieved by the invention as compared to the closest prior art; (6) praise of the invention by the infringer or others in the field; (7) the taking of licenses under the patent by others; (8) expressions of surprise by experts and those skilled in the art at the making of the invention; and (9) the patentee proceeded contrary to the accepted wisdom of the prior art. At this point, I am not aware of any secondary indicia of

non-obviousness. But, I reserve the right to review and opine on any evidence of objective indicia of nonobvious that may be presented during this proceeding.

25. I also understand that "obviousness" is a legal conclusion based on the underlying factual issues of the scope and content of the prior art, the differences between the claimed invention and the prior art, the level of ordinary skill in the prior art, and any objective indicia of non-obviousness. For that reason, I am not rendering a legal opinion on the ultimate legal question of obviousness. Rather, my testimony addresses the underlying facts and factual analysis that would support a legal conclusion of obviousness or non-obviousness, and when I use the term obvious, I am referring to the perspective of one of ordinary skill at the time of invention.

C. My Understanding of a Person Having Ordinary Skill in the Art

26. I understand that a person of ordinary skill in the relevant art (herein "POSITA") is presumed to be aware of all pertinent art, thinks along conventional wisdom in the art, and is a person of ordinary creativity—not an automaton.

27. I have been asked to consider the level of ordinary skill in the field that someone would have had at the time the claimed invention was made. In deciding the level of ordinary skill, I considered the following:

- the levels of education and experience of persons working in the field;

- the types of problems encountered in the field; and
- the sophistication of the technology.

28. My opinion below explains how a person of ordinary skill in the art would have understood the technology described in the references I have identified herein around the February 2004 timeframe. I have been advised that the earliest possible effective filing date for some claims of the ’941 patent is February 13, 2004.

29. Regardless if I use “I” or a “POSITA” during my technical analysis below, all of my statements and opinions are always to be understood to be based on how a POSITA would have understood or read a document at the time of the invention.

V. OVERVIEW OF THE ’941 PATENT

30. Like the prior art techniques I discuss below, the ’941 patent generally relates to various “[m]ethods and apparatus for adaptive transmission of wireless communication signals are described, where MCS (modulation and coding scheme), coding rates, training pilot patterns, TPC (transmission power control) levels, and subchannel configurations are jointly adjusted to adapt to the channel conditions.” EX1001, ’941 patent, 2:33-38; *see also id.*, 1:34–48.

31. As an initial matter, I note that the ’941 patent does not purport to have invented the idea of multi-carrier (MC) communication system or Orthogonal Frequency Division Multiplexing (OFDM) systems. *Id.*, 1:56-58. The ’941 patent

instead describes "conventional OFDM systems, such as IEEE802.11a, 802.11g, 802.16, or DVB-T." *Id.*, 1:58-61.

32. I note that the '941 patent also does not purport to have invented the concept of adapting transmission parameters in a wireless communication system using OFDM according to the state of a communication channel, also referred to as a channel condition. *Id.*, 1:34-2:3. In particular, the "Background" of the '941 patent admits that "[a]daptive modulation and coding (AMC) has been used in wireless systems to improve spectral efficiency in a fading environment where signal quality varies significantly. By adjusting the modulation and coding scheme (MCS) in accordance with the varying signal-to-interference-plus-noise ratio (SINR), reliable communication link can be maintained between communicating devices." *Id*.

33. The "Background" of the '941 patent goes on to state that it was known that: "[t]o improve performance, in addition to the MCS, other system functions such as channel estimation, transmission power control (TPC), and subchannel configuration can be adjusted in accordance with the state of the communication channel. For example, channel estimation typically utilizes training symbols or pilot data, which are known to both the transmitter and the receiver. For coherent modulation, the channel information can be extracted at the receiver by comparing the pilots and their corresponding received versions. For non-coherent modulation, the received samples of the pilots are used as reference for the detection of the

transmitted data." *Id*. Describing "conventional" OFDM systems, in particular, the "Background" of the '941 patent states that "pilots are transmitted for channel estimation" and "form part of other functions such as MCS, TPC, and subchannel configuration in some wireless systems." *Id*.

34. But, according to the '941 patent, the alleged shortcoming of the prior art was that the "subchannel configuration is normally defined and fixed in an operation, and it is usually not considered an adjustable function of the system to be adapted to the user profile and/or operational environment." *Id.*, 2:4-7. The '941 patent purports to solve this alleged problem by using a subchannel configuration that "is designed to be configurable so that it can be adjusted statically or dynamically according to the user profiles or environmental conditions." *Id.*, 2:41-45. According to the '941 patent, "[t]his adaptation maximizes the overall system capacity and spectral efficiency without wasting radio resources or compromising error probability performance." *Id.*, 2:38-41.

35. In particular, the '941 patent states that:

> In a multi-carrier multi-cell communication system, when all subcarriers in one subchannel are adjacent or close to each other, they are more likely to fall in the coherent bandwidth of a fading channel; thus they can be allocated to users that are either fixed in location or are move slowly. On the other hand, when subcarriers and/or subchannels that belong to one user are scattered in the frequency domain, it results

> in higher diversity gains for the fast moving users, and a better interference averaging effect.

EX1001, 7:1-9.

> Given the fact that different configurations of subchannel compositions are suitable for different scenarios or user profiles, subchannel configuration is included in the transmission adaptation process. In one embodiment, the subchannel configuration information is broadcast on the common forward control channel to all users such that each user is informed of its subchannel configuration.

Id., 7:10-16.

36. This supposed point of novelty—a dynamic subchannel configuration—is also confirmed by the prosecution history. *See* EX1002, '941 Prosecution History, 0100 ("Applicant's system is different from Wilson in at least two respects. First, applicant has amended independent claims 26, 33, 35 and 42 to indicate that applicant's system transmits subchannel configuration information, including whether the subchannels are 'distributed subcarriers or localized subcarriers in the frequency domain.' As noted in one example provided in paragraph [0025] of applicant's specification, such configuration information might be useful when assigning subchannels to users moving at different speeds. In contrast, Wilson is silent as to the transmission of subchannel information as defined by the applicant. Instead, as noted previously, Wilson is solely directed to the transmission of pilot information.")

37. But I note that the ’941 patent appears to contradict itself, because as the “Background” of the ’941 patent admits, it was known that “[t]o improve performance,” a “subchannel configuration can be adjusted in accordance with the state of the communication channel.” EX1001, 1:44-48.

38. In any event, the concept of adjusting a subchannel configuration in an OFDM system as a function of an operational environment or channel condition was not new in February 2004. Rather, this concept was known and even disclosed by the inventors of the ’941 patent years before the ’941 patent. *See generally* EX1009.

39. I note that the ’941 patent is also directed to using different antenna techniques. *See* EX1001, claims 1, 6, 8, 13. In particular, the ’941 patent states that: “Some multiple antenna techniques, such as transmission diversity, are used to improve the transmission robustness against fading channel effects, whereas other multiple antenna techniques such as multiple-input multiple-output (MIMO) schemes are used to improve transmission throughput in favorable channel conditions. In one embodiment of the adaptive transmissions the antenna technique used for a transmission is determined by the adaptation process.” *Id*., 6:60-67.

40. I understand that the Applicant also relied on the concept of using different antenna techniques as a supposed point of novelty. *See* EX1002, 0100 (“Applicant’s system is different from [U.S. Patent No. 7,436,757] Wilson in at least two respects. … Second, Wilson specifically limits its teaching to a MIMO system.

In contrast, applicant has amended pending independent claims 26, 33, 35 and 42 to indicate that applicant's system further transmits an 'antenna transmission scheme,' wherein the antenna transmission scheme comprises 'a transmission diversity scheme or a multiple-input multiple-output (MIMO) scheme.' In other words, applicant's system allows for its use in systems that rely on transmission diversity schemes other than MIMO. By being exclusively directed to a MIMO system, Wilson has no need to transmit an antenna transmission scheme, and therefore fails to either disclose or suggest the use of the antenna transmission scheme as claimed by applicant.").

41. I note, however, that the '941 patent does not identify any supposed shortcoming regarding these antenna techniques or any purported novel antenna techniques. *See generally,* EX1001. This is not surprising because, as I describe below, transmission diversity scheme and multiple-input multiple-output (MIMO) schemes were well-known before February 2004.

42. Accordingly, as I discuss in the following section, it is my opinion that each of the technological aspects of the claims, including the purported point of novelty, were well-known in the art prior to the '941 patent.

A. Prosecution History of the '941 Patent

43. I understand that the application that ultimately issued as the '941 patent was filed on March 28, 2016. EX1002, 0001-0046.

44. I understand that the USPTO issued an Office Action on October 12, 2017. *Id*., 0077-0090. The Office Action rejected claim 27 on the ground of nonstatutory double patenting, rejected claims 29-32 and 38-41 under 35 U.S.C. 112, ¶2, and rejected claims 26-43 as being anticipated. *Id*.

45. In response, I understand that the applicant amended the independent claims by adding the limitation that "the antenna transmission scheme comprising a transmission diversity scheme or a multiple-input multiple-output (MIMO) scheme and the corresponding subchannel configuration characterized by distributed subcarriers or localized subcarriers in the frequency domain." *Id*., 0093-0097. The applicant argued that because [U.S. Patent No. 7,436,757] Wilson specifically limits its teaching to a MIMO system, Wilson did not disclose or suggest the use of the antenna transmission scheme as claimed. The applicant also amended the claims to overcome the 35 U.S.C. 112 rejection and presented arguments traversing the double patenting rejection. *Id.*, 0093-0102. The Examiner then issued a notice of allowance without providing any reason for allowance. *Id*., 0109-13.

46. As I explain below, however, the claimed concepts existed well before the earliest possible priority date of the '941 patent. Indeed, had any of the aforementioned references been before the examiner during prosecution, the '941 patent should not have been allowed.

B. IPR2021-01468 of the ’941 Patent

47. I understand that on September 1, 2021, Dell filed an IPR asserting that claims 1-14 of the ’941 patent were obvious over various combinations of US 9,473,269 (“Walton269”), US 6,947,748 (“Li748”), US 2004/0165683 (“Gupta”), WO 02/093819 (“PCT819”), and US 6,400,699 (“Airy”). EX1017, 3-4.

48. I understand that on March 14, 2022, the Board issued a decision denying institution. EX1023, IPR2021-01468 DI, 47. Regarding Ground A1, the Board stated that “the record describes no problem in Walton ’269 that one of ordinary skill in the art would have resolved with the techniques used in [Li748] to address intercell interference” and the Petition did not “establish a reason to combine their teachings.” *Id.*, 33. Regarding Ground B1, the Board stated that “we agree with Patent Owner that ‘[b]ecause Airy is not said to use any particular configuration of subcarriers, Petitioner has not shown that the combination of PCT819 and Airy has any need to transmit a subchannel configuration.’” *Id.*, 45.

49. I note that the opinions I present in this declaration are not directed to the same prior art as IPR2021-01468 and have key technical differences. For example, I note that the Board stated that Walton269 “is not directed to a cellular system but is instead directed to a MIMO WLAN system that ‘includes a number of access points (APs) 110 that support communication for a number of user terminals (UTs) 120.’” *Id.*, 30.

50. However, Walton040 is directed to a multi-cell cellular system, not a WLAN system. For example, Walton040 states that "An aspect of the invention provides techniques to increase the downlink capacity of a MIMO system (e.g., a multiple-access cellular system)." EX1008, Walton040, ¶462. Walton040 explains that multiple-access communication system 100 "supports a number of users and is capable of implementing various aspects and embodiments of the invention… [that] provides communication for a number of coverage areas 102a through 102g, each of which is serviced by a corresponding base station 104 (which may also be referred to as an access point, a node B, or some other terminology)." *Id.*, ¶43. "In FIG. 1, base station 104a communicates with terminal 106a, base station 104b communicates with terminals 106b, 106c, and 106d, base station 104c communicates with terminals 106e, 106f, and 106g, and so on." *Id.*, ¶44.

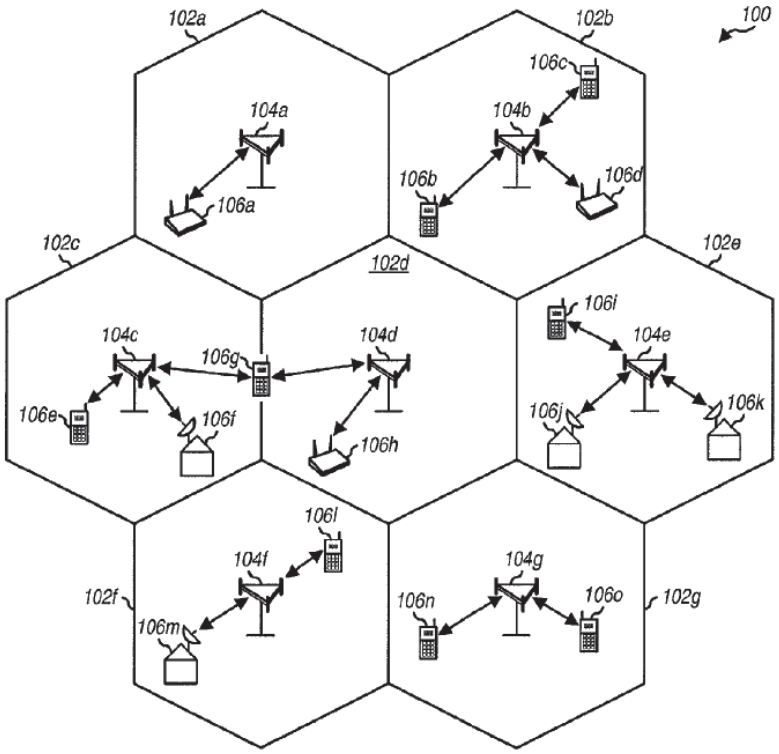

FIG. 1

EX1008, FIG. 1.

51. Walton040 further explains that the multi-cell system may employ OFDM, *id.*, ¶48, and "multiple antennas at both the transmitter unit and receiver unit (i.e., $N_R \times N_T$ MIMO) is an effective technique for enhancing the capacity of multiple-access systems (e.g., cellular, PCS, LAN, and so on)." *Id.*, ¶55. As a result, Walton040 and Li017 are directed to the same type of wireless communication system. *See Id.*, ¶43; EX1009, ¶2 ("The invention relates to the field of wireless communications; more particularly, the invention relates to multi-cell, multi-subscriber wireless systems using orthogonal frequency division multiplexing (OFDM).").

52. Walton040's multi-cell system would have also been susceptible to the specific problem of intercell interference that Li017 provides techniques to resolve. EX1009, ¶6 ("Within one cell, the subscribers can be coordinated to have different subcarriers in OFDMA. The signals for different subscribers can be made orthogonal and there is little intracell interference. However, with aggressive frequency reuse plan, e.g., the same spectrum is used for multiple neighboring cells, the problem of intercell interference arises. It is clear that the intercell interference in an OFDMA system is also frequency selective and it is advantageous to adaptively allocate the subcarriers so as to mitigate the effect of intercell interference.")

C. Level of Ordinary Skill in the Art

53. In my opinion, a person of ordinary skill in the art ("POSITA") in the context of the '941 patent as of February 13, 2004 (the earliest priority date of the '941 patent), would have a B.S. degree in electrical engineering, computer engineering, or computer science, or an equivalent field, as well as at least 3-5 years of academic or industry experience in mobile wireless communications, or comparable industry experience. A greater amount of education, i.e., a doctorate in electrical engineering, computer engineering, computer science, or an equivalent field would also qualify as a POSITA for the '941 patent in lieu of a B.S. degree. Experience could take the place of some formal training, as domain knowledge may

Ford Motor Co.
Exhibit 1003
Page 033

be learned on the job. This description is approximate, and a higher level of education or skill might make up for less experience and vice versa.

54. I am well qualified to determine the level of ordinary skill in the art. I am very familiar with the technology of the ’941 patent during the February 2004 timeframe. As mentioned above, by 2004, I had obtained both a Masters and a Ph.D. in Electrical Engineering from Stanford University and had acquired extensive experience relating to wireless communication systems. Specifically, by 2004 I had acquired experience in OFDM used in mobile and wireless communication systems. I thus also qualify as a POSITA for the ’941 patent.

D. Claim Construction

55. I have been instructed that the challenged claims of the ’941 patent are to be given their ordinary and customary meaning as understood by one of ordinary skill in the art at the time of the invention in light of the specification and the prosecution history pertaining to the patent. Based on my review of the challenged claims, it is my opinion that none of the claim terms require explicit constructions. Accordingly, all claim terms should receive their plain and ordinary meaning, in the context of the ’941 patent specification, which I understand is sometimes referred to as the *Phillips* standard.

56. I have also been informed that the Board has previously declined to construe any claim term of the ’941 patent. *See* EX1023, 10-19. However, I have

been informed that the Board previously stated "that while we do not provide an explicit construction of 'the mobile station-specific transmission parameters indicate . . . a corresponding subchannel configuration . . . the corresponding subchannel configuration characterized by distributed subcarriers or localized subcarriers in the frequency domain,' we determine that the correct construction requires, at a minimum, that the mobile station-specific transmission parameters are capable of indicating, as alternatives, both distributed subcarriers and localized subcarriers in the frequency domain as subchannel configurations." *Id*., 19. I agree that no construction is necessary for this term but have applied this understanding to my interpretation of the prior art discussed below.

VI. BACKGROUND OF THE TECHNOLOGY

57. I understand that analyzing the state of wireless or mobile communications during the years prior to the earliest possible priority date of February 2004 can provide valuable insight into what people of ordinary skill in the art were aware of at the time, and in what direction the industry was taking.

58. Prior to the priority date of the '941 patent, all of the technology at issue in the '941 patent was broadly applied and well-known by individuals working in the wireless or mobile communications industry in general. No individual elements of the '941 claims were new or novel by February 2004, and there was nothing new

or novel about the way in which those elements were combined in the claims of the ’941 patent.

59. Further, there were no technological barriers to combining these elements to form the claimed invention. Indeed, combining these elements would have yielded predictable results. Thus, the concept of adjusting a subchannel configuration and antenna scheme was well-known prior to February 2004. Below, I discuss this, and the other claimed technological aspects, in the prior art.

A. Orthogonal Frequency Division Multiplexing (OFDM) Communication Systems Were Well-known

60. As I noted above, the ’941 patent recognized that Orthogonal Frequency Division Multiplexing (OFDM) communication systems were known before February 2004 and even identified certain “conventional OFDM” systems, including IEEE802.11a, 802.11g, 802.16, and DVB-T. EX1001, 1:56-61.

61. This is not surprising because OFDM, which allows for the transmission of multiple signals simultaneously, was first proposed in the 1960’s as an analog technique, employing Frequency Division Multiple Access (FDMA). EX1024. FDMA is a way to separate signals in the radio spectrum; an example of this is commercial radio. The radio station, 91.7 FM is a frequency-modulated signal of bandwidth 200 kHz centered at 91.7 MHz. The other radio stations are separated in frequency, each one is centered at carrier frequency ideally 400 kHz away from other stations. A radio receiver uses a bandpass filter (filters out all frequencies

except for the radio station of interest) to separate the desired radio station from all others. Each of the subcarriers in these early systems required additional bandwidth as guardbands to ensure that the signals could be separated at the receiver.

62. In the 1970's the use of the discrete Fast Fourier Transform (FFT) for OFDM allowed the transmission of multiple subcarriers that were orthogonal without the use of guardbands. *See generally* EX1025. Here, the bandwidth for the signal is divided into narrow bandwidths called subcarriers or tones; each tone sends separate information. For example, if the bandwidth of the signal is 5 MHz, one can divide the bandwidth into 100 subcarriers, each of bandwidth approximately 500 kHz. Because the signals are separable in frequency (orthogonal) the receiver can recover the data from each subcarrier. OFDM can be thought of as a set of chords, each tone can be separated (hence orthogonal) at the receiver so the multiple messages can be recovered. The number of subcarriers or tones is related to the size of the FFT. Because FFTs depend on an algorithm based on powers of 2, the number of tones in an OFDM symbol is based on a power of 2. Each tone carries a modulated symbol, e.g. QPSK modulation.

63. Starting in the 1980's OFDM was used in telephone modems and later digital subscriber lines (DSL). *See generally* EX1027; EX1028. Also in the 1980's OFDM was proposed for use in a fast-fading wireless channel. *See generally* EX1026. OFDM would provide better diversity in fast-fading channel than a single-

carrier system. In the 1990's OFDM with forward error control coding across the subcarriers was proposed and adapted for the European Digital Audio Broadcast system, EX1029, as well as the Wireless LANs, EX1030. By the late 1990's a few companies and universities were investigating using OFDM for cellular standards. EX1031; EX1032.

64. In a single-carrier system, the time period, T, of each signal is proportional to the inverse of the bandwidth B, i.e. T approximately 1/B. If you divide the bandwidth into several narrow-band signals, each signal will have a wider time period; if the bandwidth B is divided into N subcarriers, the time period of each narrow band signal is proportional to N/B. This is illustrated in Figure A of my declaration below. Because and OFDM signal is comprised of several independent subsignals, the time-domain OFDM signal looks like a Gaussian random process (due to the Central Limit Theorem).

Ford Motor Co.
Exhibit 1003
Page 038

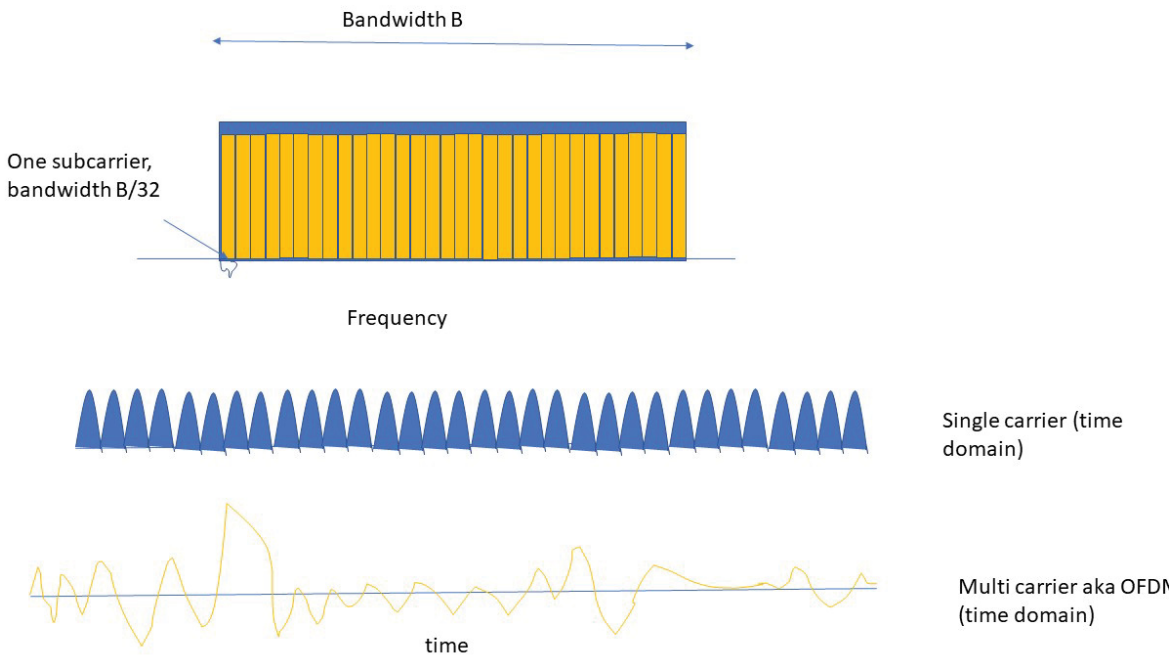

Figure A (annotated).

65. In this figure, a given bandwidth B is divided into 32 subcarriers. In time, a single-carrier system occupying the entire bandwidth will have a width, T. An OFDM symbol, comprised of the 32 carriers, will transmit 32 symbols worth of data over a period of 32T seconds. It should look like a Gaussian noise process due adding up several random independent signals.

66. When a radio signal travels from the transmitter to the receiver, the channel—the path between the two—can subject the received signal to changes in amplitude, phase, and delay. For example, in a wireless system, the signal can bounce off radio-reflective surfaces, causing the signal to arrive at different times. This is called multipath. In a single-carrier system, multipath can cause the

information signals to bleed into each other, requiring complex receiver algorithms to separate them. This is especially true if the time period, T, is less than the time period of the echo, as is illustrated in Figure B below. The equalizer adds complexity but does have the advantage of diversity enhancements to the received signal.

67. Note that as the distance between the transmitter and receiver changes, as in a wireless system, the channel response will change. This is referred to as fading. If the change can be seen within one symbol period, that is a fast-fading channel. If the channel is relatively stable within a symbol period that is a slow-fading channel. Multipath affects the frequency selectivity of the channel; the fading of the channel due to movement between the transmitter and receiver affects the time-selectivity of the channel.

68. In addition, fading can affect how one uses the channel. Some techniques require channel knowledge at the receiver. The channel may be relatively static for one symbol period or frame but have significant change in the next frame. If a mobile device is moving slowly enough so that it can send timely channel state information to the transmitter, the transmitter can use that information to improve reception. This includes but is not limited to: assigning power and modulation to a subcarrier based on its signal strength, MIMO techniques such as beamforming, and spatial channels, When a mobile device is moving too fast for it to send timely channel state information to the transmitter, diversity techniques, such as space-time

coding, are used instead. In summary, an OFDM signal in a wireless channel can experience multipath delay that leads to frequency variation among the subcarriers. In addition, due to the movement of a mobile receiver, the OFDM symbol may experience adjacent carrier interference due to fast fading or it may be in a situation where the channel is relatively static during one OFDM symbol, but changing too fast to allow accurate channel state information at the transmitter. *See generally* EX1007.

69. In a well-designed OFDM system, the symbol period is wider than the echo. Accordingly, the narrowband tones are relatively free of the frequency selectivity shown below in Figure C. Unlike a single-carrier system that requires complex equalization, an OFDM signal only requires one-tap equalizers on each subcarrier, greatly reducing the complexity of the receiver. However, equalization in a single-carrier provides frequency diversity while OFDM can suffer from high probability of error due to deep fading in the frequency domain as in Monsen. *See generally* EX1023, Monsen.

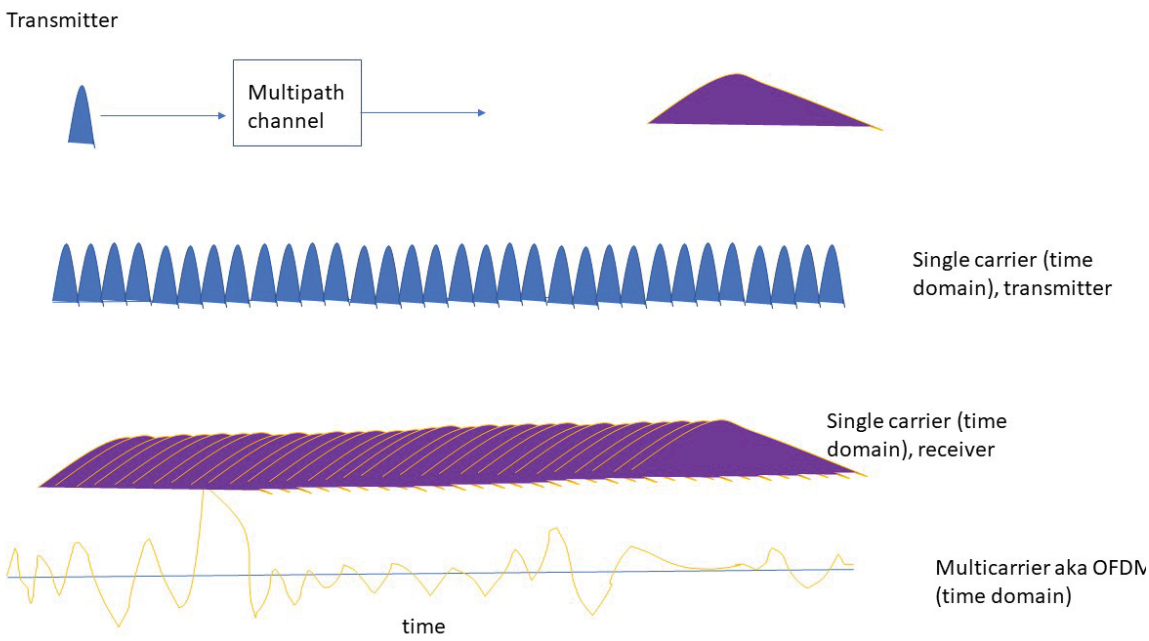

Figure B (annotated). In this figure, multipath leads to the signal stretching in time, causing overlap of single-carrier signals, a phenomenon called intersymbol interference. OFDM is also affected; however, the delay into the next OFDM signal is a small percentage of the entire signal and can be mitigated with a guard period. In addition, the overlap of an OFDM signal with a delayed and attenuated signal of itself can be mitigated through low-complexity equalization in the frequency band.

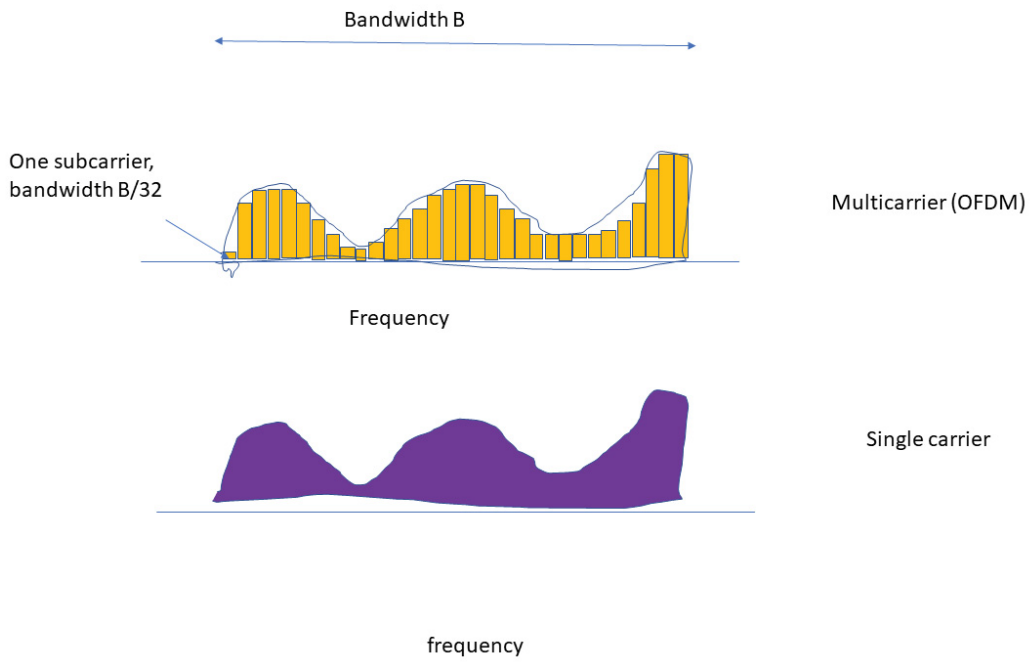

Figure C (annotated). As shown in this figure, in the frequency domain, the narrow subcarriers are relatively flat with respect to the frequency-domain variability, frequency selectivity, caused by multipath. Unlike multicarrier, the single-carrier spectrum is greatly affected by the frequency selectivity and results in the intersymbol interference shown in Figure B.

70. As OFDM is subject to deep fades in the frequency domain as shown in Figure 3, some subcarrier data will suffer from low SNR and hence higher probability of error. In Leonard J. Cimini's 1985 article, "Analysis and Simulation of a Digital Mobile Channel Using Orthogonal Frequency Division Multiplexing," EX1026, OFDM in a fast-fading environment was proposed to mitigate the effect of deep fades. *Id.*, 665. In a fast-fading environment, the frequency subcarriers would

have intercarrier interference requiring an equalizer. The equalizer would increase the diversity of the channel. *Id.* In 1989, Bernard LeFloch et al. proposed Coded OFDM, COFDM, forward error control coding across the frequency carriers in a slow-fading channel for Digital Audio Broadcast in his paper "Digital Sound Broadcasting to Mobile Receivers." *See generally* EX1029. This opened the use of OFDM for a slow-fading channels in a wireless environment, where it was then proposed for Wireless LAN, *see generally* EX1030, and cellular systems, *see generally* EX1031; *see generally* EX1032. Given a set bandwidth B for an OFDM signal, that time period of the OFDM signal can be chosen as N/B, where N is the number of subcarriers. By applying error-control coding across the tones, the strong SNR tones help the weak ones and smooth out excessive errors due to frequency selective fades. This opened the door for OFDM as a viable technique in wireless systems.

71. The original COFDM system was proposed for wireless broadcast, one set of messages to multiple users. In the 90's OFDM was proposed for wireless LAN, e.g. EX1030 and cellular systems; EX1031; EX1032. In the 90's engineers debated the 3rd generation standard and one of the issues was CDMA versus OFDM. While the 2nd generation was the first digital voice standard, the 3rd generation cellular system was designed to allow voice, data and video.

72. This required techniques that allow different data rates and different delays. This is also referred to as Quality-of-Service, QoS. Allowing different QoS for different users required a flexibility in the system. CDMA provides flexibility in rate through changing the number of chips per bit. OFDM can be divided into a time-frequency grid as shown in Figure 4, a figure from Wahlquist, EX1032. This flexibility can be used to assign different QoS resources to multiple users from the time-frequency grid. As expressed in EX1032, there is a push and pull between diversity and channel estimation. (Channel estimation is needed to compensate for different amplitudes and phases on each subcarrier.)

73. As stated in EX1032:

> To utilize diversity and achieve good performance the information should be transmitted on different places in the time/frequency grid so that not all information is lost in a fading dip. This method utilises the channel diversity. Unfortunately this is in contradiction of keeping the information together so that channel estimation can be performed (as discussed in the previous section). The result must therefore be a trade-off. The principle of the structure is illustrated in Figure 3.

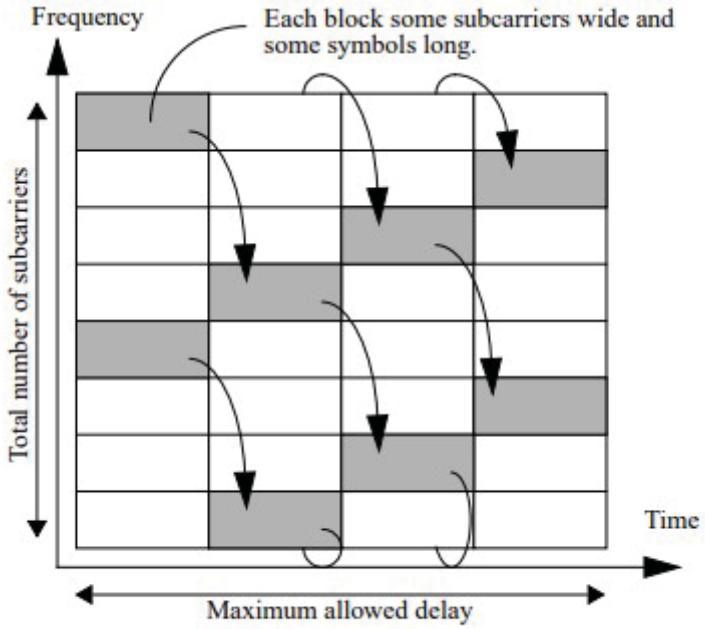

Figure 3: Example of block structure.

EX1032, FIG. 3.

74. 802.16a, Heath, Walton040, and Li are also just a few of the many prior art references that specifically describe OFDM communication systems.

B. Adapting to Channel Conditions Was Well-known

75. As an initial matter, I note that the ’941 patent admits that adapting to channel conditions in a wireless communication system was known before February 2004. For example, the Background of the ’941 patent states that “[a]daptive modulation and coding (AMC) has been used in wireless systems to improve spectral efficiency in a fading environment where signal quality varies significantly.” EX1001, 1:34-40. Specifically, “[b]y adjusting the modulation and coding scheme (MCS) in accordance with the varying signal-to-interference-plus-noise ratio

(SINR), reliable communication link can be maintained between communicating devices."

76. The Background of the '941 patent goes on to state that it was known:

> To improve performance, in addition to the MCS, other system functions such as channel estimation, transmission power control (TPC), and subchannel configuration can be adjusted in accordance with the state of the communication channel. For example, channel estimation typically utilizes training symbols or pilot data, which are known to both the transmitter and the receiver. For coherent modulation, the channel information can be extracted at the receiver by comparing the pilots and their corresponding received versions. For non-coherent modulation, the received samples of the pilots are used as reference for the detection of the transmitted data.

EX1001, 1:44-55.

77. Moreover, the Background of the '941 patent states that it was known that:

> Fast TPC can compensate for fast fading. In a multi-cell multiple-access system, TPC is also used to reduce intra-cell and inter-cell interference and to conserve battery life for the mobile station by transmitting with only necessary power. TPC is one of many functions in some wireless systems, along with MCS, pilot attributes, subchannel configuration, etc.

EX1001, 1:64-2:3.

78. Similarly, Walton040 (Exhibit 1008) describes adapting transmission parameters to channel conditions, specifically describing techniques "to adaptively process data prior to transmission, based on channel state information, to more closely match the data transmission to the capacity of the channel." EX1008, Abstract.

79. "For both the downlink and uplink, the base station may control access to the system by allocating and de-allocating resources to users (e.g., on a demand basis). When users are allocated resources, information may be provided to the users via a control channel to indicate the particular operating mode to use. Moreover, the system may adjust various operating parameters (e.g., the operating mode, channel, data rate, antenna(s) to transmit from, transmit power, and so on) in an adaptive manner based on system loading and/or some combination of performance metrics, as described below." *Id.*, ¶74

80. In particular, Walton040 explains that the base station may select a coding and modulation scheme for data streams to be transmitted to terminals based on signal-to-noise-plus-interference ratios (SNRs) and convey the "schedule, antenna assignments, coding and modulation schemes, other information, or any combination thereof" to the scheduled terminals via a control channel (step 928). *Id.*, ¶482.

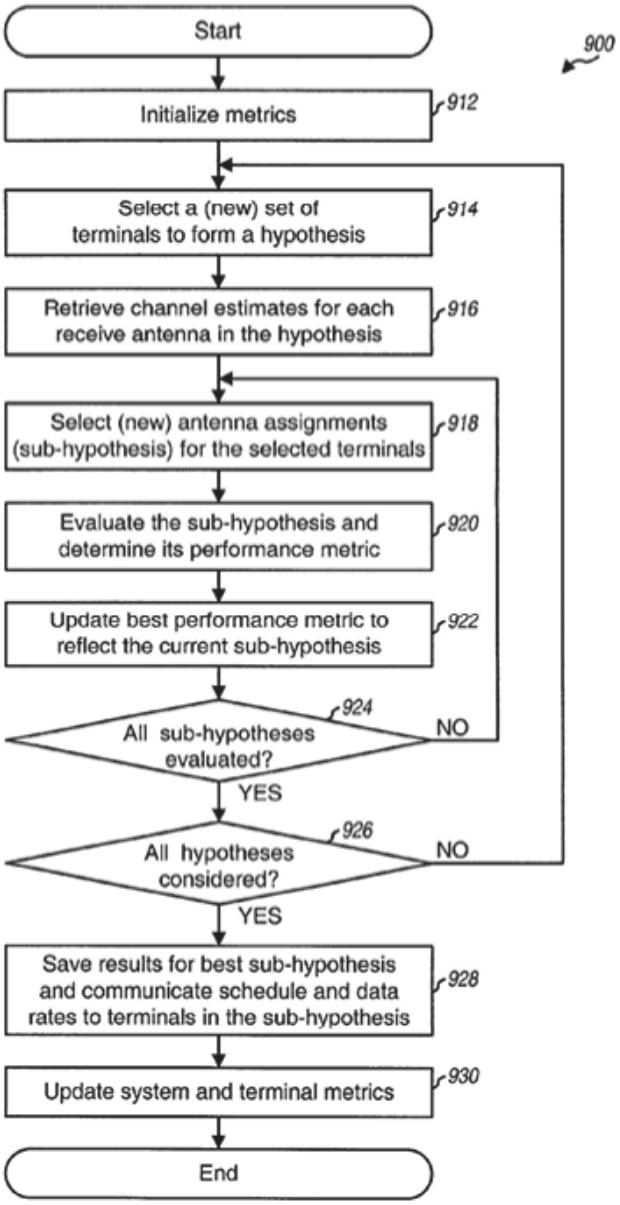

FIG. 9A

EX1008, FIG. 9A.

81. Additionally, 802.16a, Heath, and Li017 are few among many prior art references that disclose adapting transmission parameters to channel conditions.

C. Transmitting a Control Message over a Control Channel Was Well-known

82. To effectively adapt to channel conditions in a wireless communication system, it was well-known to transmit a control message from a base station to a mobile station over a control channel.

83. For example, 802.16a provides a frame control header (FCH) in the downlink from a base station to provide downlink parameters to a subscriber. This FCH is "transmitted at the beginning of each frame" from the base station to the mobile station and "contains the DL-MAP message and may additionally include the UL-MAP, DCD or UCD messages." EX1006, 184, 67 ("[A] SS attempts to obtain the downlink parameters by decoding the DL-MAP and DCD messages."). "The DL-MAP message defines the access to the downlink information" and can include a number of information elements depending on the physical layer (PHY) specification implemented. EX1005, 46.

84. Walton040 explained that "[f]or both the downlink and uplink, the base station may control access to the system by allocating and de-allocating resources to users (e.g., on a demand basis). When users are allocated resources, information may be provided to the users via a control channel to indicate the particular operating mode to use. Moreover, the system may adjust various operating parameters (e.g., the operating mode, channel, data rate, antenna(s) to transmit from, transmit power,

and so on) in an adaptive manner based on system loading and/or some combination of performance metrics, as described below." EX1008, ¶74

85. Heath similarly explains that "the base transceiver stations and subscriber units communicate information related to the operation mode over a control channel." EX1007, 8:48-50. "FIG. 3D represents the packets described above with reference to FIG. 2. Each of the packets (b1, b2, b3, and b4) includes a header 324 and a payload 322 as is known in the field of packet based networks. The packets also include a control channel 326, or field, which contains bits that are dedicated to communicating information related to the mode of operation between the base transceiver stations and the subscriber unit." *Id*., 8:63-60.

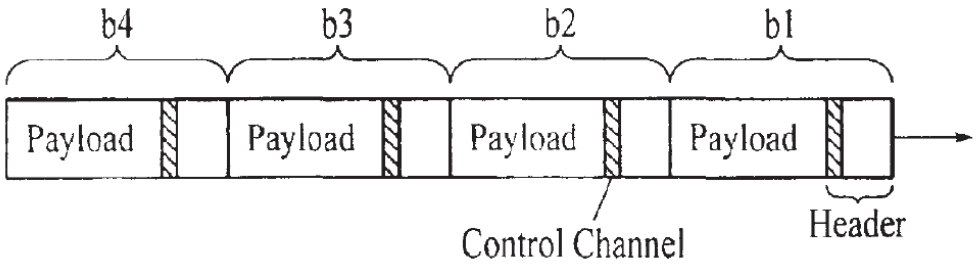

FIG. 3D

EX1007, FIG. 3D

86. Heath's "control channel may be located in the header or the payload portion of each packet, however it is preferably located in the header" and that "a control channel may involve a dedicated transmission frequency a dedicated time slot or some other identified communications channel." EX1007, 8:60-65.

87. As one example, Heath explains that the "mode determination logic is located within the base transceiver station[]," *id.*, 11:67-12:2, such that the "mode determination logic 854 considers at least one of the measured transmission characteristics from the channel analyzer 834 and optionally information from the system database 836 to determine whether the next mode of operation should be spatial multiplexing or non-spatial multiplexing. Determining the mode of operation preferably involves comparing a measured transmission characteristic to a transmission characteristic threshold as described above. A signal indicating the mode determination from the mode determination logic is transmitted over a control channel to the mode switch 810 as represented by feedback loop 860." *Id.*, 14:48-58.

88. Li also discloses transmitting a control message from a base station to a mobile station over a control channel.

D. Transmission Diversity and Multiple-Input Multiple-Output (MIMO) Antenna Schemes Were Well-known

89. Various antenna schemes, including transmission diversity scheme and multiple-input multiple-output (MIMO) schemes were well-known by February 2004. As just one example, Walton040 noted that to "provide diversity against deleterious path effects and improve performance, multiple transmit and receive antennas may be used" and that generally, "diversity increases and performance improves as the number of transmit and receive antennas increases." EX1008, ¶6.

90. In particular, Walton040 explained that "[t]he use of multiple antennas at both the transmitter unit and receiver unit (i.e., $N_R \times N_T$ MIMO) is an effective technique for enhancing the capacity of multiple-access systems (e.g., cellular, PCS, LAN, and so on). Using MIMO, a transmitter unit may send multiple independent data streams on the same communication channel to a single or multiple receiver units by exploiting the spatial dimensionality of the communication channel coupling the transmit and receive antennas." *Id*., ¶55.

91. Walton040's wireless communication system was designed to leverage the multiple antennas at the transmitter and receiver to support a number of operating modes. *Id*., ¶56. "In the system, each base station may be equipped with both multiple transmit and receive antennas for data transmission and reception, and each terminal may be equipped with a single transmit/receive antenna or multiple transmit/receive antennas for data transmission and reception. The number of antennas used for each terminal type may be dependent on various factors such as, for example, the services to be supported by the terminal (e.g., voice, data, or both), cost constraints, regulatory constraints, safety issues, and so on. Table 1 summarizes a matrix of operating modes that may be supported by system 100." *Id*., ¶56.

TABLE 1

Transmit	Receive Antennas	
Antennas	1	N_R
1	SISO	SIMO
N_T	MISO	MIMO

EX1008, Table 1.

92. "SIMO (Single-Input, Multiple-Output)—the RF link is characterized by a single transmit antenna and multiple receive antennas. This operating mode may be used for receive diversity." EX1008, ¶59. "MISO (Multiple-Input, Single-Output)—the RF link is characterized by multiple transmit antennas and a single receive antenna. This operating mode may be used for transmit diversity." *Id*., ¶60. "MIMO (Multiple-Input, Multiple-Output)—the RF link is characterized by multiple transmit antennas and multiple receive antennas." *Id*., ¶61.

93. Walton040 also described specific modes that can be employed to achieve different advantages, including: "Diversity only—the use of both multiple transmit and receive antennas (i.e., both transmit and receive diversity) **to achieve highly reliable transmission of a single data stream,**" *id*., ¶63 (emphasis added); "Spatial multiplexing, single-user (single-user MIMO mode)—the use of both multiple transmit and receive antennas to a**chieve high data rates for a single terminal by creating multiple parallel transmission channels by exploiting the spatial dimensionality of the communication channel**" *id*., ¶64 (emphasis added); and "Spatial multiplexing, multi-user (multi-user MIMO mode)—the use of multiple transmit and receive antennas to **accommodate communication with multiple terminals concurrently on the same channel**," *id*., ¶65 (emphasis added).

94. In particular, Walton040 noted that in transmit diversity, the "use of multiple transmit antennas for a given data stream increases diversity and improves reliability against deleterious path effects." *Id*., ¶103. And the "spatial multiplexing modes associated with MIMO provide a great deal of system flexibility and further support a mixture of terminal types." *Id*., ¶70. As an example, Walton040 illustrated a simulation of downlink throughput of single-user MIMO mode and multi-user MIMO mode in Figure 11A:

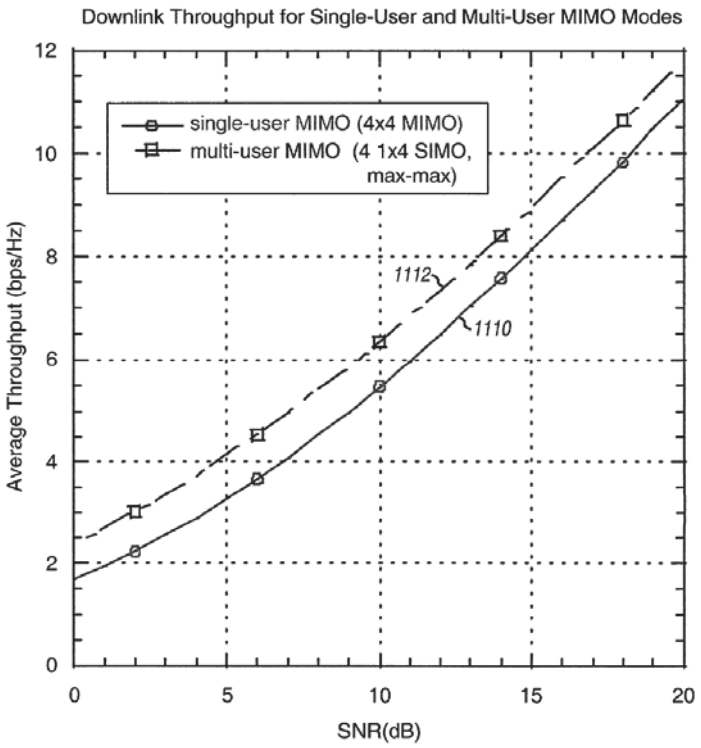

FIG. 11A

EX1008, FIG. 11A.

95. "The average throughput for the single-user MIMO mode is shown as plot 1110, and the average throughput for the multi-user MIMO mode is shown as plot 1112." EX1008, ¶542.

96. Walton040 noted that the simulated throughput associated with multi-user MIMO mode showed better performance than that achieved for the single-user MIMO mode. *Id*., ¶543. Specifically, "[i]n the multi-user MIMO mode, the scheduling schemes are able to exploit multi-user selection diversity to achieve improved performance (i.e., higher throughput) even though each terminal uses linear spatial (e.g., MMSE) processing technique. In fact, the multi-user diversity in the multi-user MIMO mode results in an average downlink throughput that exceeds the throughput achieved by dividing a transmission interval into four equal-duration sub-slots and assigning each MIMO terminal to a respective sub-slot." *Id*. Walton040 thus recognized that "the ability to accommodate both single-user and multi-user MIMO modes provides added flexibility in the provisioning of wireless data services." *Id*., ¶544.

97. 802.16a also disclosed a multiple-input multiple-output (MIMO) scheme referred to as an advanced antenna scheme (AAS). AAS uses more than one antenna element to "improve range and system capacity, by adapting the antenna pattern and concentrating its radiation to each individual subscriber." EX1006, 66. According to 802.16a, "[t]he spectral efficiency can be increased linearly with the

number of antenna elements. This is achieved by steering beams to multiple users simultaneously to realize an inter-cell frequency reuse of one and an in-cell reuse factor proportional to the number of antenna elements." *Id*. 802.16a also explains that "[a]n additional benefit is the SNR gain realized by coherently combining multiple signals, and the ability to direct this gain to particular users." *Id*.

98. Moreover, Heath disclosed a wireless communication system that supports wireless transmissions with and without spatial multiplexing. EX1007, Abstract.

99. Heath explained years before the '941 patent that "wireless communications system have been developed which utilize multiple spatially separated antennas at the base transceiver station and/or the subscriber unit to transmit a subscriber datastream over multiple paths. Transmitting a subscriber datastream between a base transceiver station and a subscriber unit over multiple paths is referred to as transmission diversity. Because the transmission antennas are spatially separated, the receiving device receives diverse signals that can be processed to reduce multipath fading and to suppress interfering signals." EX007, 1:33-43. "While transmission diversity involves transmitting a subscriber datastream over multiple paths, each of the transmitted datastreams carries the same information." *Id.*, 1:44-46.

100. "Transmitter diversity can be obtained by providing a transmitter with two or more (N) antennas. The N antennas imply N channels that suffer from fading in a statistically independent manner. Therefore, when one channel is fading due to the destructive effects of multipath interference, another of the channels is unlikely to be simultaneously suffering from fading. By virtue of the redundancy provided by the N independent channels, a diversity receiver can often reduce the detrimental effects of fading." *Id.*, 7:55-63.

101. Moreover, before the '941 patent, "wireless communications systems have been developed that utilize multiple spatially separated antennas at the base transceiver stations and the subscriber units to multiplex transmissions in order to increase the bit rates between the base transceiver stations and the subscriber units." *Id.*, 1:46-51. Heath explains that "[a]lthough spatial multiplexing works well to increase the bit rate between base transceiver stations and subscriber units that support spatial multiplexing, not all base transceiver stations and subscriber units support spatial multiplexing. In addition, even when a base transceiver station and a subscriber unit both support spatial multiplexing, it may not be appropriate to utilize spatial multiplexing for every transmission. For example, transmission conditions may be such that spatial multiplexing provides poor results, thereby eliminating the possibility of an increased bit rate that is provided by spatial multiplexing." *Id.*, 1:56-65.

102. Heath thus disclosed a system using "multiple spatially separated antennas at the base transceiver stations and the subscriber units to multiplex transmissions in order to increase the bit rates between the base transceiver stations and the subscriber units." *Id.*, 1:46-51. Figure 2 illustrates a spatially multiplexed transmission between a base transceiver station and subscriber unit:

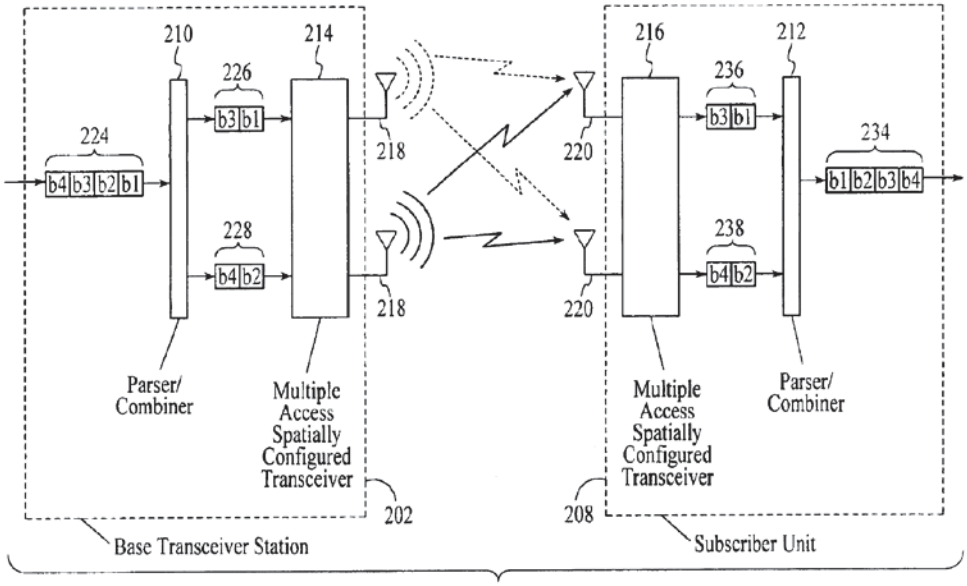

FIG. 2

EX1007, FIG. 2.

E. Distributed and Localized Subchannel Configurations Were Well-known

103. Subchannel configurations with distributed or localized subcarriers were well-known by February 2004. For example, Lawrey explained in 1999 that for an OFDM system "[t]here are several methods for allocating carriers to users," including "grouped carriers" or "spread out carriers." EX1013, 762.

104. Lawrey explained, "[t]he simplest scheme is to group the carriers allocated to each user. Grouping carriers minimises inter-user interference due to distortion, power level variation and frequency errors. However, grouping the carrier makes the transmission susceptible to fading, as the whole group of carriers can be lost in a null in the spectrum. This problem can be partly overcome by frequency hopping the carriers." *Id.* Alternatively, the "[c]arriers can be allocated in a comb pattern, spreading them over the entire system bandwidth. This improves the frequency diversity, preventing all the carriers used by a user being lost in a null in the spectrum. However, this allocation scheme may be susceptible to inter-user interference." *Id.*, 763.

105. As 802.16a explained, the "transmission of the DL is performed on the subchannels of the OFDMA symbol. The number of subchannels needed for the different transmissions (modulation and coding) and their mapping is defined in the DL-MAP message. The mapping of the subchannels is performed in a two-dimensional grid, involving the subchannels in the frequency domain and OFDMA symbols in the time domain, as explained in 8.5.3.2." EX1006, 186,

106. "In the OFDMA mode, the active carriers are divided into subsets of [sub]carriers, each subset is termed a subchannel. In the DL, a subchannel may be intended for different (groups of) receivers… The [sub]carriers forming one

subchannel may, but need not be adjacent. The concept is shown in Figure 128as." *Id*., 180.

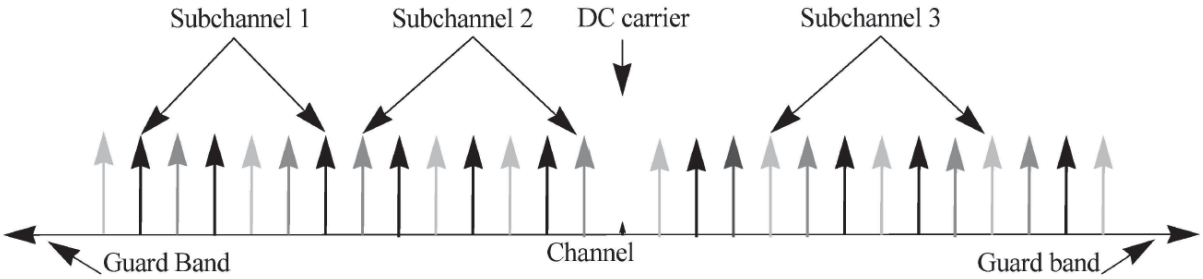

Figure 128as—OFDMA frequency description (3 channel schematic example)

EX1006, FIG. 128as.

107. For the "distributed carrier permutation," data subcarriers are partitioned into groups of contiguous carriers such that each subchannel consists of one carrier from each of these groups according to a specific equation (69). *Id.*, 199-200. For the "adjacent carrier permutation," "symbol data within a subchannel is assigned to adjacent carriers and the pilot and data carriers are assigned fixed positions in the frequency domain within an OFDM symbol." EX1006, 201.

108. Indeed, certain inventors of the '941 patent disclosed this concept of distributed and localized subcarrier configurations in Li017 years before the '941 patent was filed. Li017, in particular, explained that "there are two categories of clusters: coherence clusters, containing multiple subcarriers close to each other and diversity clusters, containing multiple subcarriers with at least some of the subcarriers spread far apart over the spectrum. The closeness of the multiple subcarriers in coherence clusters is preferably within the channel coherence

bandwidth, i.e. the bandwidth within which the channel response remains roughly the same, which is typically within 100 kHz for many cellular systems. On the other hand, the spread of subcarriers in diversity clusters is preferably larger than the channel coherence bandwidth, typically within 100 kHz for many cellular systems. Of course, the larger the spread, the better the diversity. Therefore, a general goal in such cases is to maximize the spread." *Id.*, ¶111.

109. Li017 Figure 9 "illustrates exemplary cluster formats for coherence clusters and diversity clusters for Cells A-C. Referring to Figure 9, for cells A-C, the labeling of frequencies (subcarriers) indicates whether the frequencies are part of coherence or diversity clusters. For example, those frequencies labeled 1-8 are diversity clusters and those labeled 9-16 are coherence clusters. For example, all frequencies labeled 1 in a cell are part of one diversity cluster, all frequencies labeled 2 in a cell are part of another diversity cluster, etc., while the group of frequencies labeled 9 are one coherence cluster, the group of frequencies labeled 10 are another coherence cluster, etc." *Id.*, ¶112.

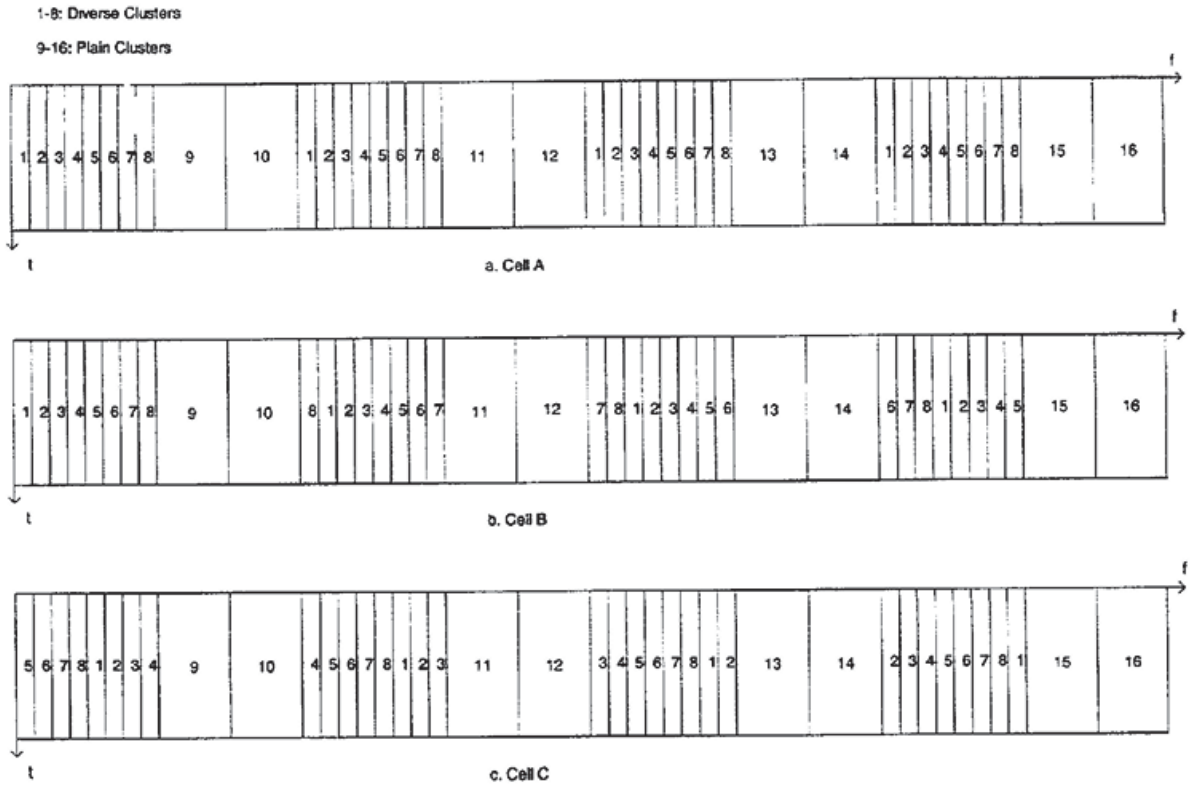

Figure 9

EX1006, FIG. 9.

110. Furthermore, selecting a subchannel configuration—distributed or localized subcarriers—based on a channel condition was also well-known by February 2004.

111. I note, as an initial matter, that the Background of the '941 patent admits that it was known that "[t]o improve performance," a "subchannel configuration can be adjusted in accordance with the state of the communication channel." EX1001, 1:44-48. But the '941 patent then appears to contradict itself, contending that the shortcoming of the prior art is somehow that the "subchannel configuration is normally defined and fixed in an operation, and it is usually not considered an

adjustable function of the system to be adapted to the user profile and/or operational environment." *Id*., 2:4-7.

112. I disagree because the inventors of the '941 patent themselves disclosed, years before the '941 patent, the concept of adjusting a subchannel configuration in an OFDM system as a function of an operational environment or channel condition. *See generally*, Li017. As one example, Li017 explained that "each subscriber measures the SINR of each subcarrier cluster and reports these SINR measurements to their base station through an access channel. The SINR value may comprise the average of the SINR values of each of the subcarriers in the cluster. Alternatively, the SINR value for the cluster may be the worst SINR among the SINR values of the subcarriers in the cluster. In still another embodiment, a weighted averaging of SINR values of the subcarriers in the cluster is used to generate an SINR value for the cluster. This may be particularly useful in diversity clusters where the weighting applied to the subcarriers may be different." EX1009, 45

113. "Upon receiving the feedback from a subscriber, the base station further selects one or more clusters for the subscriber among the candidates (processing block 104). The base station may utilize additional information available at the base station, e.g., the traffic load information on each subcarrier, amount of traffic requests queued at the base station for each frequency band, whether frequency

bands are overused, and how long a subscriber has been waiting to send information. The subcarrier loading information of neighboring cells can also be exchanged between base stations. The base stations can use this information in subcarrier allocation to reduce inter-cell interference." *Id*., 47

114. "After cluster selection, the base station notifies the subscriber about the cluster allocation through a downlink common control channel or through a dedicated downlink traffic channel if the connection to the subscriber has already been established (processing block 105). In one embodiment, the base station also informs the subscriber about the appropriate modulation/coding rates." *Id*., 48

115. "Referring to FIG. 11, processing logic in the base station performs channel/interference variation detection (processing block 1101). Processing logic then tests whether the results of the channel/interference variation detection indicate that the user is mobile or in a fixed position close to the edge of the cell (processing block 1102). If the user is not mobile or is not in a fixed position close to the edge of the cell, processing transitions to processing block 1103 where processing logic in the base station selects coherence clusters; otherwise, processing transitions to processing block 1104 in which processing logic in the base station selects diversity clusters." *Id*., ¶121.

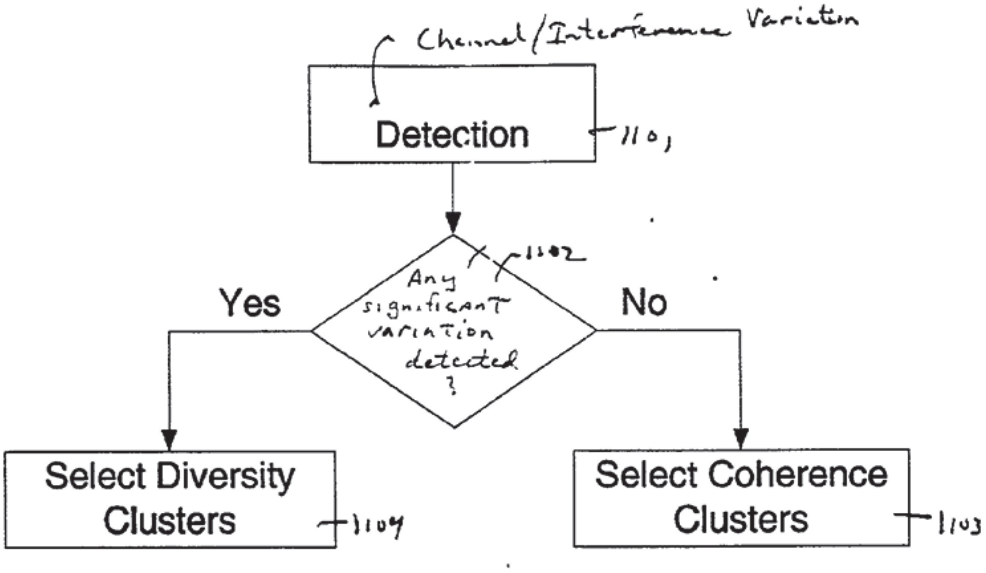

Figure 11

EX1009, FIG. 11.

VII. OVERVIEW OF THE APPLIED REFERENCES.

116. I provide an overview of each of the applied references below.

A. 802.16a

117. 802.16a is a standard that specifies the air interface of a fixed (stationary) point-to-multipoint broadband wireless access system providing multiple services in a wireless metropolitan area network (MAN). EX1005, iv.

118. This standard is defined in two documents: 802.16a-2001 and 802.16a-2003. As 802.16a-2003 explains:

> This document amends IEEE Std 802.16-2001 by enhancing the medium access control layer and providing additional physical layer specifications in support of broadband wireless access at frequencies from 2-11 GHz. The resulting standard specifies the air interface

Ford Motor Co.
Exhibit 1003
Page 066

> affixed (stationary) broadband wireless access systems providing multiple services. The medium access control layer is capable of supporting multiple physical layer specifications optimized for the frequency bands of application. The standard includes particular physical layer specifications applicable to systems operating between 2 and 66 GHz. It supports point-to-multipoint and optional mesh topologies.

EX1006, cover. 802.16a-2003 further provides specific "editing instructions contained in this amendment [that] define how to merge the material contained herein into the existing base standard (IEEE Std 802.l™-2001) to form the comprehensive standard." *Id*., 1. In my opinion, a POSITA would have thus read 802.16a-2001 and 802.16a-2003 together as describing a single wireless communication standard, which I refer to in my declaration as 802.16a.

119. I understand that 802.16a-2001, on its face, indicates that it was published by the IEEE in 2002. EX1005, cover. In addition, EX1005 is a printout from IEEE Xplore (https://ieeexplore.ieee.org/document/997967). The copy of 802.16a-2001 was obtained from the IEEE and attached as Exhibit A to the Declaration of Gordon MacPherson regarding "802.16-2001 - IEEE Standard for Local and Metropolitan Area Networks - Part 16: Air Interface for Fixed Broadband Wireless Access Systems, April 8, 2002." EX1013.

120. I note that as indicated by IEEE Xplore for 802.16a-2001, it was made available to the public for download at least as early as April 8, 2002. EX1013, 2

("Date of Publication: 08 April 2002). IEEE Xplore also identifies "IEEE" as the "Publisher" and provides an Electronic ISBN of 978-0-7381-3070-5. *Id*.

121. I understand that 802.16a-2003, on its face, indicates that it was published by the IEEE in 2003. EX1005, cover. In addition, EX1006 is a printout from IEEE Xplore (https://ieeexplore.ieee.org/document/1195640). The copy of 802.16a-2003 was obtained from the IEEE and attached as Exhibit A to the Declaration of Gordon MacPherson regarding "802.16a-2003 - Standard for Amendment to IEEE Standard for Local and Metropolitan Area Networks - Part 16: Air Interface for Fixed Broadband Wireless Access Systems - Medium Access Control Modifications and Additional Physical Layer Specifications for 2-11 GHz, April 1, 2003." EX1014.

122. I note that as indicated by IEEE Xplore for 802.16a-2003, it was made available to the public for download at least as early as April 1, 2003. EX1014, 2 ("Date of Publication: 01 April 2003). IEEE Xplore also identifies "IEEE" as the "Publisher" and provides an Electronic ISBN of 978-0-7381-3567-0. *Id*.

123. In my opinion, prior to February 2004, IEEE Xplore was well-known to a POSITA, and a POSITA would have been familiar with using IEEE Xplore to discover and obtain publications of interest, including 802.16a-2001 and 802.16a-2003. Indeed, IEEE is a well-known, reputable publisher of scientific and technical publications relied on by professionals from all over the world as a trustworthy

source. Members in the scientific and technical communities who publish or engage in research, including myself, rely on the information provided by IEEE publications.

124. 802.16a discloses an Orthogonal Frequency Division Multiplexing (OFDM) communication system having at least one base station serving multiple mobile stations ("subscriber stations"/"subscribers"/"SS"). *See generally* EX1006, Chapter 8.5; EX1011, 100; EX1035, Chapter 12. 802.16a's WirelessMAN-OFDMA is based on OFDM modulation utilizing a transmission structure with time slots in the time domain (TDD) and frequency subchannels in the frequency domain. Figures 128av and 128ax illustrate frame structures for BS to SS transmissions:

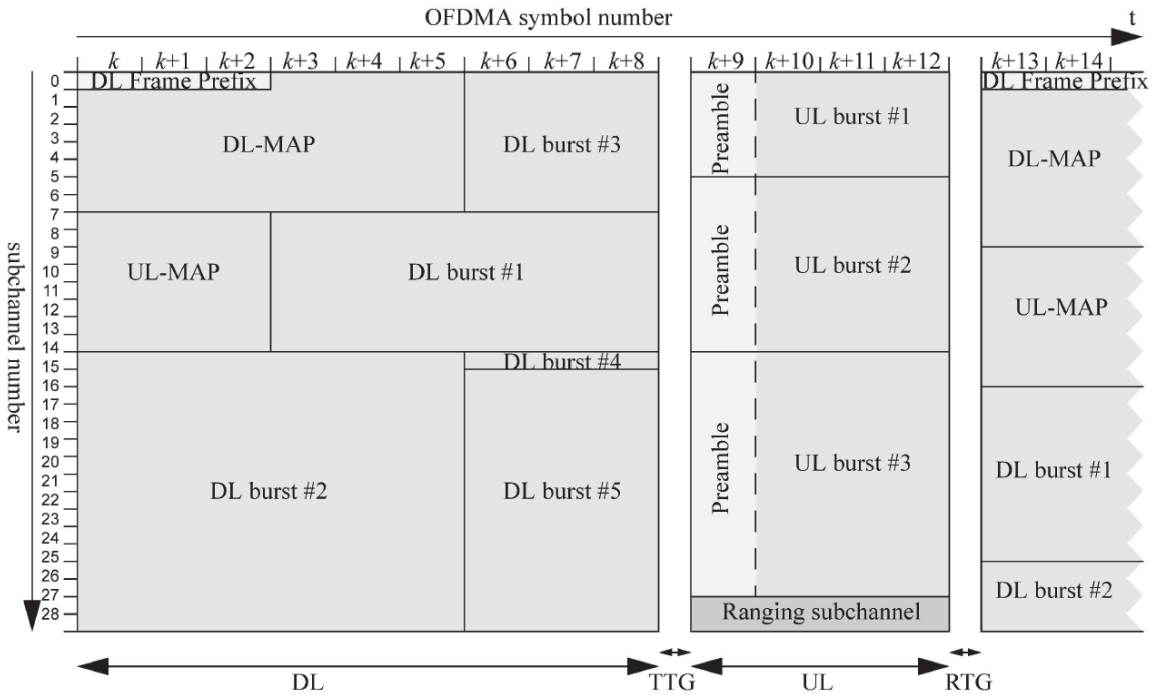

Figure 128av—Time plan - one TDD time frame

EX1006, FIG. 128av

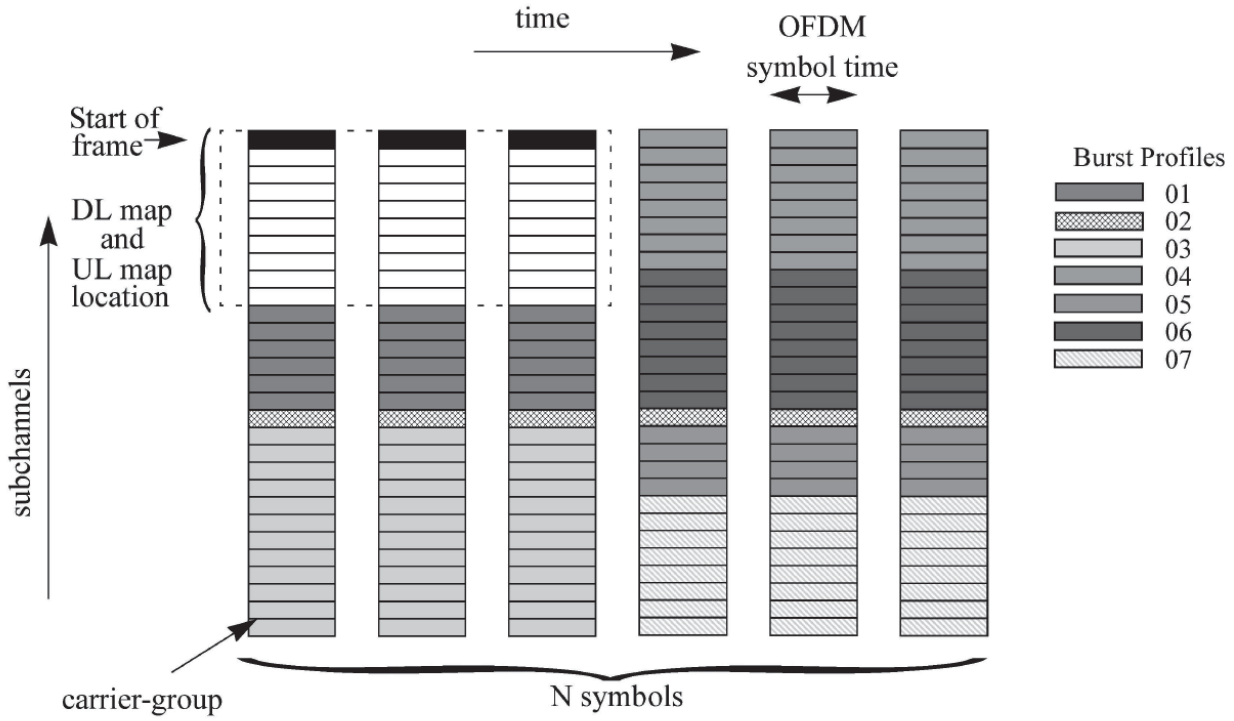

Figure 128ax—Example of OFDMA DL and UL map location

EX1006, FIG. 128ax

125. 802.16a's communication system is configured to adapt its transmission parameters based on the capabilities of the base station and subscribes as well as the state of the channel. EX1006, 4 ("adaptive modulation: A system's ability to communicate with another system using multiple burst profiles and a system's ability to subsequently communicate with multiple systems using different burst profiles,"), 83 ("The downlink burst profile is determined by the BS according to the quality of the signal that is received by each SS.").

126. 802.16a provides a frame control header (FCH) in the downlink from a base station to provide downlink parameters to a subscriber. This FCH is

"transmitted at the beginning of each frame" from the base station to the mobile station and "contains the DL-MAP message and may additionally include the UL-MAP, DCD or UCD messages." EX1006, 184; EX1005, 67 ("[A] SS attempts to obtain the downlink parameters by decoding the DL-MAP and DCD messages.").

127. "The DL-MAP message defines the access to the downlink information" and can include a number of information elements depending on the physical layer (PHY) specification implemented. EX1005, 46. Table 15 illustrates the DL-Map message format:

Table 15—DL-MAP message format

Syntax	Size	Notes
DL-MAP_Message_Format() {		
Management Message Type = 2	8 bits	
PHY Synchronization Field	Variable	See appropriate PHY specification.
DCD Count	8 bits	
Base Station ID	48 bits	
Number of DL-MAP Elements *n*	16 bits	
Begin PHY Specific Section {		See applicable PHY section.
for (i = 1; i <= n; i++) {		For each DL-MAP element 1 to n.
DL_MAP_Information_Element()	Variable	See corresponding PHY specification.
if !(byte boundary) {		
Padding Nibble	4 bits	Padding to reach byte boundary.
}		
}		
}		
}		

EX1005, Table 15.

128. In particular, DL-MAP specifies a burst profile (using a DIUC value), OFDM Symbol offset, subchannel offset, number of OFDM symbols and the number of subchannels for a specific DL burst. EX1006, 193 ("The DIUC value is used in the DL-MAP message to specify the Burst Profile to be used for a specific downlink burst."); EX1005, 5 ("burst profile: Set of parameters that describe the uplink or downlink transmission properties associated with an interval usage code. Each profile contains parameters such as modulation type, forward error correction type, preamble length, guard times, etc.").

129. Table 116bp illustrates the OFDMA DL-MAP Information Element:

Table 116bp—OFDMA DL-MAP_Information_Element format

Syntax	Size	Notes
DL-MAP_Information_Element() {		
DIUC	4 bits	
if (UIUC == 15) {		
Extended DIUC dependent IE	variable	AAS_DL_IE()
} else {		
OFDM Symbol offset	10 bits	
Subchannel offset	6 bits	
No. OFDM Symbols	10 bits	
No. Subchannels	6 bits	
}		
}		

EX1006, Table 116bp

130. 802.16 explains that the DIUC is the "Downlink interval usage code used for the burst," the OFDM Symbol offset is the "offset of the OFDM symbol in which the burst starts, measured in OFDM symbols from the allocation start time specified by the Allocation_Start_time field in the DL-MAP," the Subchannel offset is the "lowest index OFDM subchannel used for carrying the burst, starting from subchannel 0," the No. OFDM Symbols is the "number of OFDM symbols that are used (fully or partially) to carry the DL PHY Burst," and the No. of subchannels the the "number OFDMA subchannels with subsequent indexes, used to carry the burst." EX1006, 188.

131. 802.16a's BSs and SSs can communicate using different antenna schemes with multiple antennas, including transmit diversity (space time coding (STC)) and adaptive antenna systems (AAS). *Id*., 203-205 (describing STC), 66-68 (describing AAS).

132. "Space-Time Coding (STC) (see [B26]) may be used on the downlink to provide 2nd order (Space) transmit diversity" using "two transmit antennas on the BS side." *Id*., 203 ("8.5.8 Transmit diversity: Space-Time Coding").

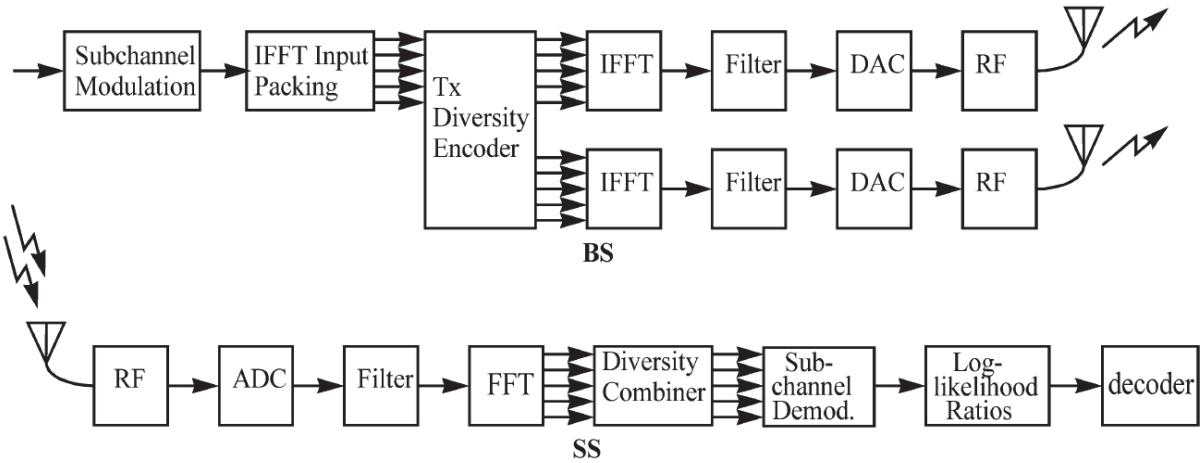

Figure 128bf—Illustration of STC

EX1006, FIG. 128bf.

133. AAS "through the use of more than one antenna element, can improve range and system capacity, by adapting the antenna pattern and concentrating its radiation to each individual subscriber. The spectral efficiency can be increased linearly with the number of antenna elements. This is achieved by steering beams to multiple users simultaneously to realize an inter-cell frequency reuse of one and an in-cell reuse factor proportional to the number of antenna elements." EX1006, 66. 802.16a also explains that "[a]n additional benefit is the SNR gain realized by coherently combining multiple signals, and the ability to direct this gain to particular users." *Id*.

134. Table 0a illustrates the STC and AAS options for OFDMA:

Table 0a—Air interface nomenclature

Designation	Applicability	PHY specification	Additional MAC requirements	Options	Duplexing alternative
WirelessMAN-SC	10–66 GHz	8.2			TDD FDD
WirelessMAN-SCa	2–11 GHz licensed bands	8.3		AAS (6.2.7.7) ARQ (6.2.4) STC (8.3.3)	TDD FDD
WirelessMAN-OFDM	2–11 GHz licensed bands	8.4		AAS (6.2.7.7) ARQ (6.2.4) Mesh (6.2.6.7) STC (8.4.7)	TDD FDD
WirelessMAN-OFDMA	2–11 GHz licensed bands	8.5		AAS (6.2.7.7) ARQ (6.2.4) STC (8.5.8)	TDD FDD
WirelessHUMAN	2–11 GHz license-exempt bands	[8.3, 8.4 or 8.5] and 8.6	DFS (6.2.14)	AAS (6.2.7.7) ARQ (6.2.4) Mesh (6.2.6.7) (with 8.4 only) STC (8.3.3/8.4.7/8.5.8)	TDD

EX1006, Table 0a (annotated).

135. 802.16a further explains that the "transmission of the DL is performed on the subchannels of the OFDMA symbol. The number of subchannels needed for the different transmissions (modulation and coding) and their mapping is defined in the DL-MAP message. The mapping of the subchannels is performed in a two-dimensional grid, involving the subchannels in the frequency domain and OFDMA symbols in the time domain, as explained in 8.5.3.2." EX1006, 186, 180 ("In the OFDMA mode, the active carriers are divided into subsets of carriers, each subset is termed a subchannel. In the DL, a subchannel may be intended for different (groups of) receivers…").

136. That is, in 802.16a each subchannel is a collection of subcarriers that may or may not be adjacent in the frequency domain. *Id.* ("The carriers forming one subchannel may, but need not be adjacent. The concept is shown in Figure 128as.").[1]

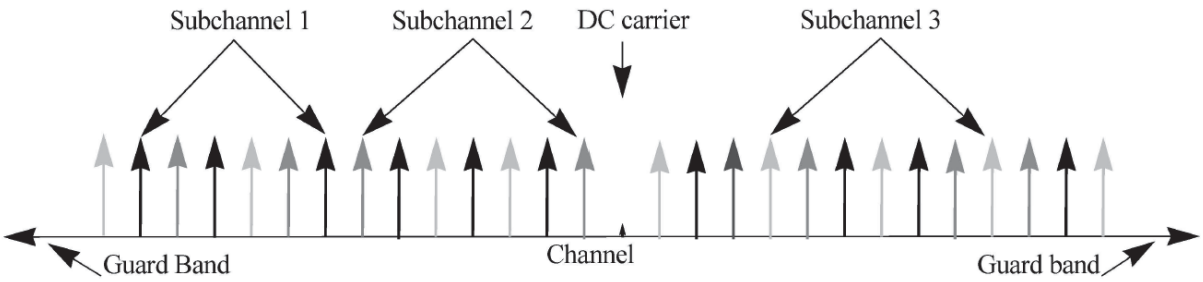

Figure 128as—OFDMA frequency description (3 channel schematic example)

EX1006, FIG. 128as

137. For the "distributed carrier permutation" in 802.16a, subchannels consist of non-contiguous subcarriers distributed across the OFDM frequency spectrum. This is done in the following way—data carriers are partitioned into groups of contiguous carriers such that each subchannel consists of one carrier from each of these groups according to Equation (69). EX1006, 199-200.

---

[1] I note that the 802.16a sometimes refers to "subcarriers" simply as "carriers." However, a POSITA would have understood these terms to be synonymous. I also note that 802.16a's use of the terms "subchannel" and "subcarrier" (or "carrier") is consistent with the use of these terms in the '941 patent.

138. For the "adjacent carrier permutation" in 802.16a, "symbol data within a subchannel is assigned to adjacent carriers and the pilot and data carriers are assigned fixed positions in the frequency domain within an OFDM symbol." *Id*., 201

139. The parameters in DL-Map are then used by the BS to transmit a DL burst. EX1005, 24 ("stations check the address in the received messages and retain only those addressed to them"), 46 ("The DL-MAP message defines the access to the downlink information."), 97 ("The information in the DL-MAP pertains to the current frame (i.e., the frame in which it was received)."), 220 ("Each SS receives and decodes the control information of the downlink and looks for MAC headers indicating data for that SS in the remainder of the downlink subframe."); EX1006, 67 ("[A] SS attempts to obtain the downlink parameters by decoding the DL-MAP and DCD messages.").

B. Heath

140. Heath is directed to a wireless communication system that supports wireless transmissions with and without spatial multiplexing. EX1007, Abstract. "FIG. 1 depicts a multiple access wireless communications system that includes base transceiver stations (BTSs) 102 and 104 and subscriber units (SUs) 106, 108, and 110. The base transceiver stations include spatially separated antennas 114 and spatial multiplexing logic 118. The base transceiver stations also include mode determination logic 122 that enables the system to adapt its mode of operation

between spatial multiplexing and non-spatial multiplexing in response to transmission-specific variables." *Id.*, 5:7-16. In at least one embodiment, the wireless communication system of Heath utilizes orthogonal frequency division multiple access (OFDMA). *Id.*, 5:17-23.

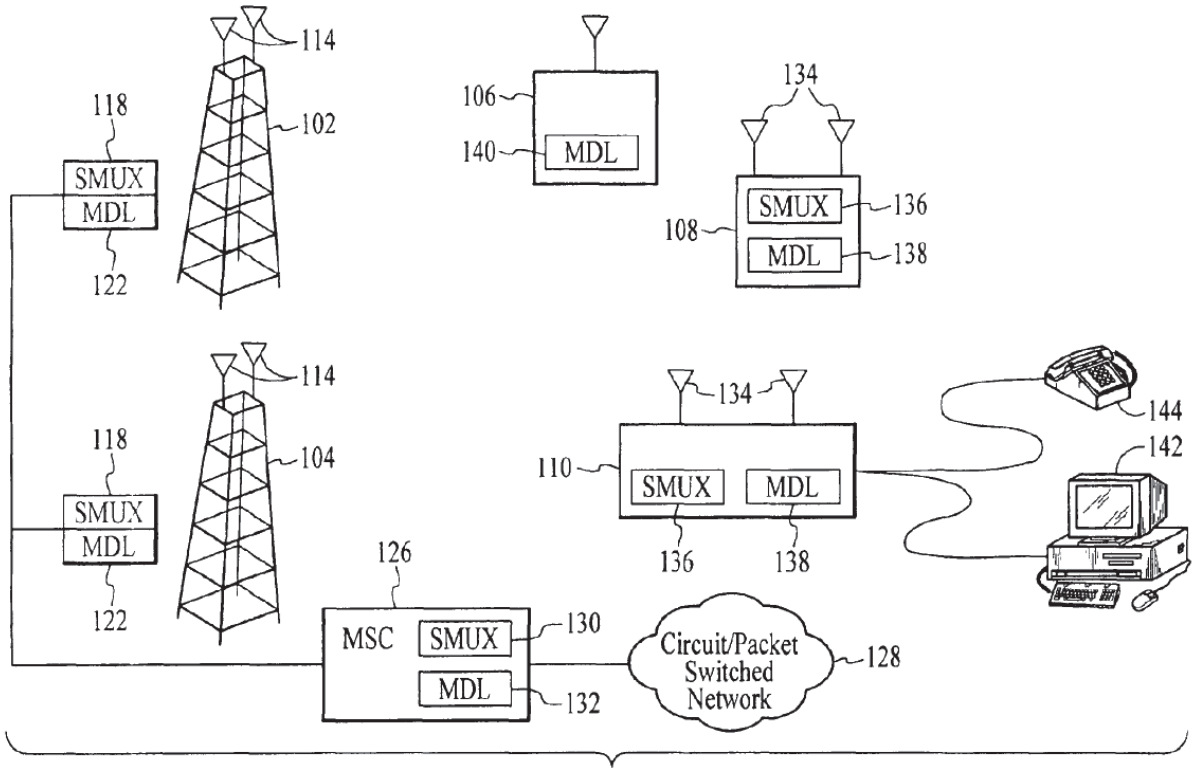

FIG. 1

EX1007, FIG. 1.

141. Heath explains that years before the '941 patent, "wireless communications system have been developed which utilize multiple spatially separated antennas at the base transceiver station and/or the subscriber unit to transmit a subscriber datastream over multiple paths. Transmitting a subscriber datastream between a base transceiver station and a subscriber unit over multiple

paths is referred to as transmission diversity. Because the transmission antennas are spatially separated, the receiving device receives diverse signals that can be processed to reduce multipath fading and to suppress interfering signals." EX1007, 1:33-43. "While transmission diversity involves transmitting a subscriber datastream over multiple paths, each of the transmitted datastreams carries the same information." *Id.*, 1:44-48.

142. Moreover, before the '941 patent, "wireless communications systems have been developed that utilize multiple spatially separated antennas at the base transceiver stations and the subscriber units to multiplex transmissions in order to increase the bit rates between the base transceiver stations and the subscriber units." *Id.*, 1:44-53. Heath explains that "[a]lthough spatial multiplexing works well to increase the bit rate between base transceiver stations and subscriber units that support spatial multiplexing, not all base transceiver stations and subscriber units support spatial multiplexing. In addition, even when a base transceiver station and a subscriber unit both support spatial multiplexing, it may not be appropriate to utilize spatial multiplexing for every transmission. For example, transmission conditions may be such that spatial multiplexing provides poor results, thereby eliminating the possibility of an increased bit rate that is provided by spatial multiplexing." *Id.*, 1:56-67.

143. Heath thus disclosed a "wireless communications system and method that adapts its mode of operation between spatial multiplexing and non-spatial multiplexing in response to various transmission-specific variables." *Id.*, 1:66-2:8.

144. Figure 2 of Heath illustrates "a base transceiver station 202 and a subscriber unit 208 that support spatial multiplexing." *Id.*, 6:35-37. Heath explains that in one example, a parser 210 "divides the subscriber datastream into one substream that includes packets b1 and b3 and into another substream that includes packets b2 and b4." *Id.*, 6:50-53.

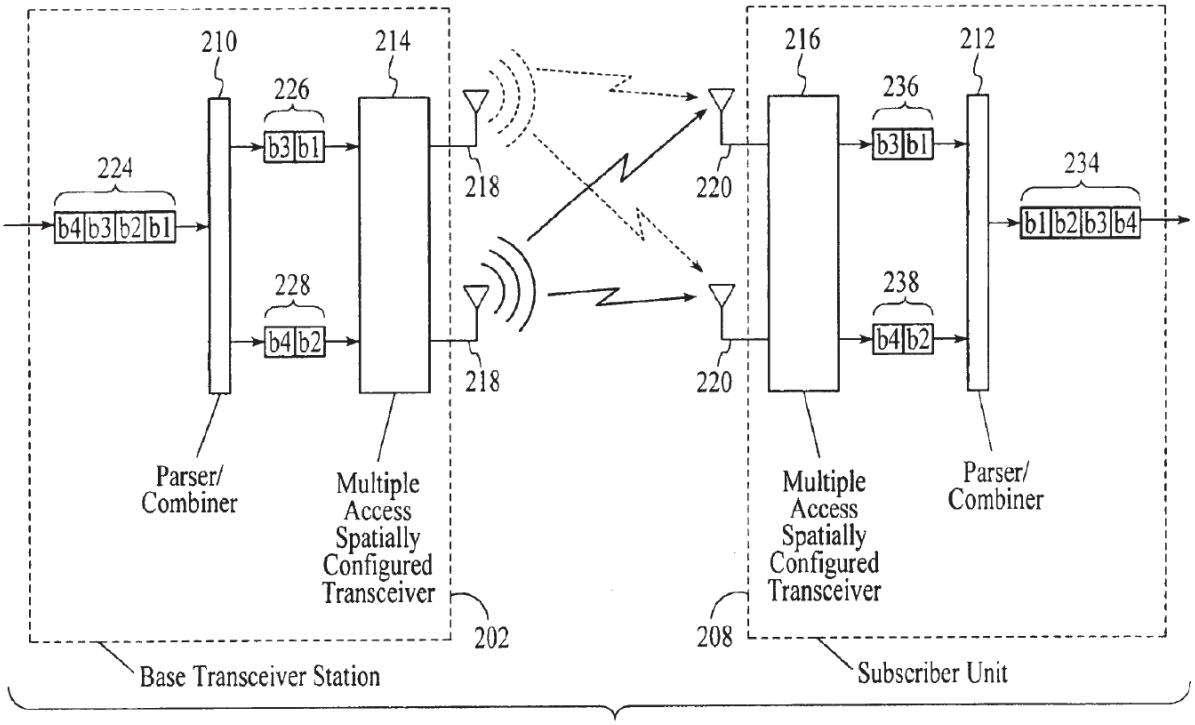

FIG. 2

EX1007, FIG. 2.

145. As Heath explains, the focus on the wireless communications system is to adapt its mode of operation between spatial multiplexing and non-spatial multiplexing in response to transmission-specific variables. EX1007, 8:22-25. As shown in Figure 3D, "the base transceiver stations and subscriber units communicate information related to the operation mode over a control channel. For example, a control channel may include a specified field of bits in a transmitted bitstream that are dedicated to communicating mode determination information." *Id.*, 8:48-54.

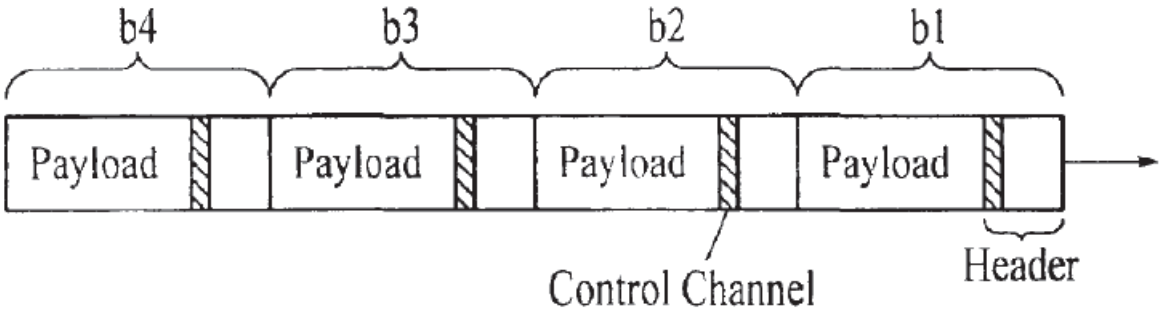

FIG. 3D

EX1007, FIG. 3D

146. "Each of the packets (b1, b2, b3, and b4) includes a header 324 and a payload 322 as is known in the field of packet based networks. The packets also include a control channel 326, or field, which contains bits that are dedicated to communicating information related to the mode of operation between the base transceiver stations and the subscriber unit." EX1007, 8:54-60.

147. As Heath explains, the "control channel may be located in the header or the payload portion of each packet, however it is preferably located in the header. In another embodiment, a control channel may involve a dedicated transmission frequency a dedicated time slot or some other identified communications channel." *Id*., 8:60-65. "In an embodiment, the information 314 (shown in FIG. 3B), indicating that spatial multiplexing is preferred, is transmitted to the base transceiver station over the control channel and the information 316 (shown in FIG. 3C), indicating that non-spatial multiplexing is preferred, is transmitted to the base transceiver station over the control channel." *Id.*, 8:65-9:4.

148. Figure 4 of Heath illustrates "transmission-specific inputs 450 and 452 that are considered by the mode determination logic 454 to determine the appropriate mode of operation for subsequent datastream transmissions." *Id.*, 9:15-18. "As shown in FIG. 4, the transmission-specific variables can be generally categorized as transmission characteristics and system specifications. Although the identified variables are not meant to be exhaustive, the transmission characteristics that may be considered in the mode determination process relate to a characteristic of a received signal and include delay spread, post-processing signal-to-noise ratio, cyclical redundancy check (CRC) failures, residual inter-symbol interference (ISI), mean square error, coherence time, and path loss. The transmission characteristics

of a received signal will typically vary over time as transmission conditions change." *Id.*, 9:21-32.

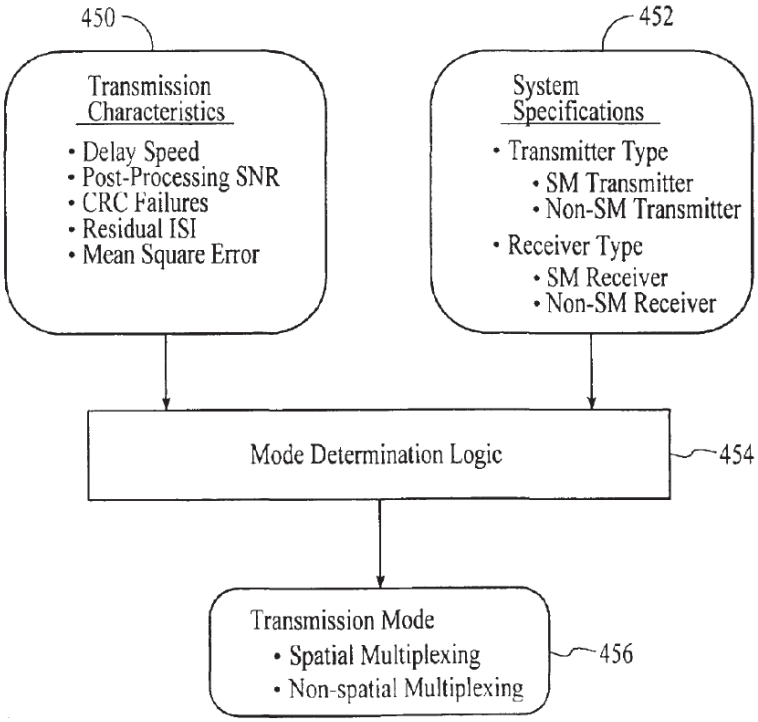

FIG. 4

EX1007, FIG. 4.

149. "Upon consideration of one, or a combination, of the transmission-specific variables, the mode determination logic outputs 456 an indication of the operation mode (either spatial multiplexing or non-spatial multiplexing) for a subsequent transmission. Because the mode determination logic determines the mode of operation in response to a measured transmission characteristic, or characteristics, the system adapts to utilize a mode of operation that is preferred for the current set of conditions." *Id.*, 9:60-10:1.

150. Figure 7 of Heath illustrates "a process flow diagram of a method for link initialization between a base transceiver station and a subscriber unit that adapts its mode of operation between spatial multiplexing and non-spatial multiplexing in response to transmission-specific variables." *Id.*, 4:46-51.

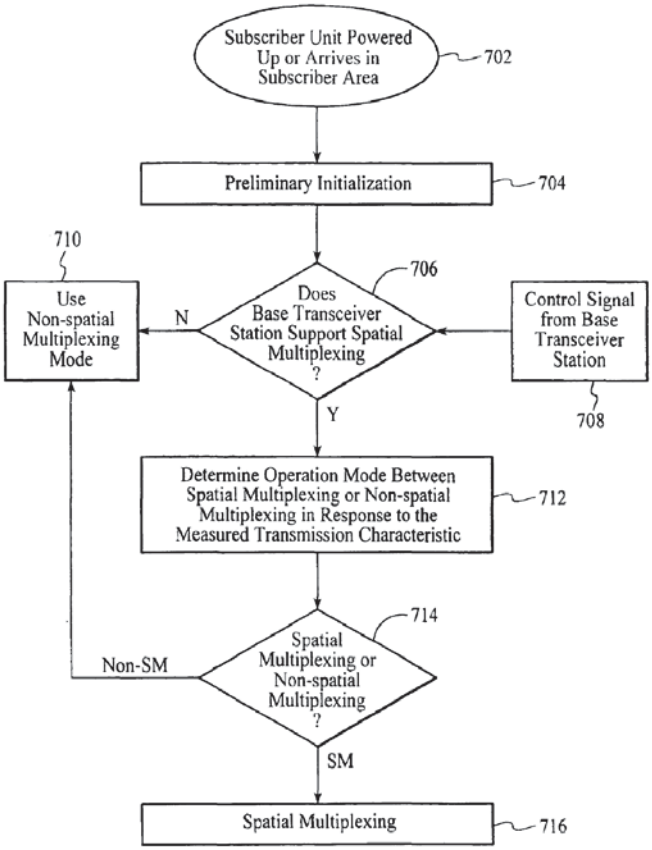

FIG. 7

EX1007, FIG. 7.

C. Walton040

151. Walton040 is directed to "a multiple-access communication system 100 that supports a number of users and is capable of implementing various aspects and embodiments of the invention… [that] provides communication for a number of

coverage areas 102a through 102g, each of which is serviced by a corresponding base station 104 (which may also be referred to as an access point, a node B, or some other terminology)." EX1007, ¶43

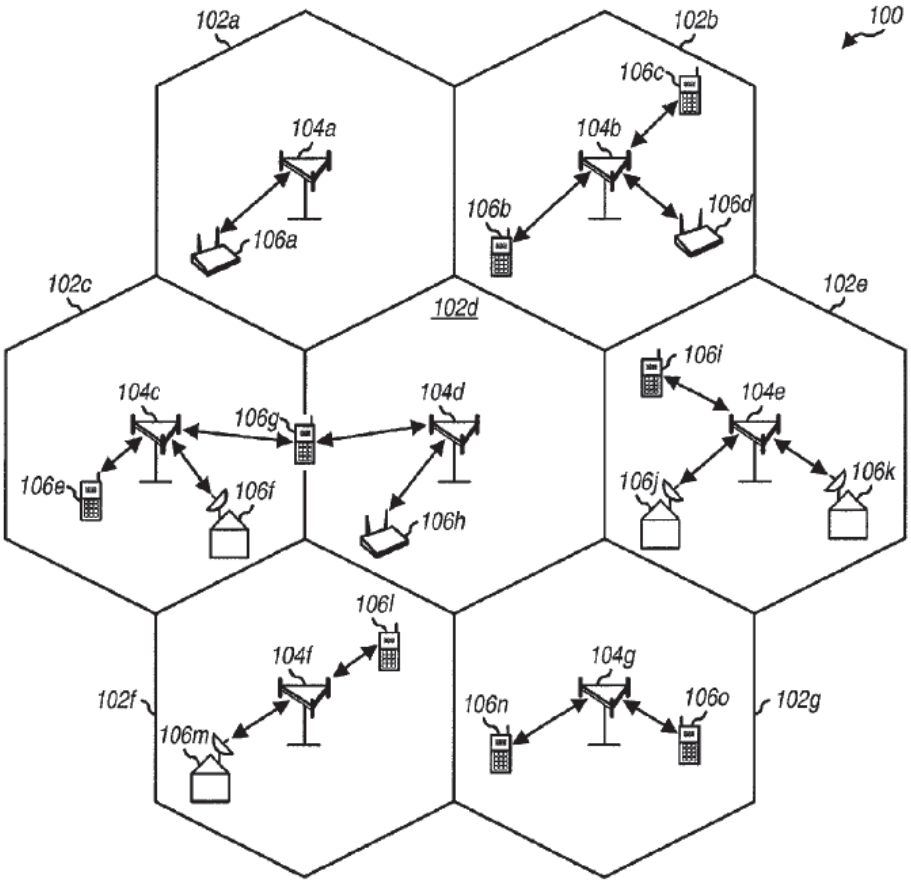

FIG. 1

EX1007, FIG. 1.

152. Walton040 discloses "techniques that may be used to achieve better utilization of the available resources (e.g., transmit power and bandwidth) and robust performance for the downlink and uplink in a wireless communication system. These techniques may be advantageously employed in a MIMO system, a multiple-access

system …, an OFDM system, or a communication system that employs any combination of the above (e.g., a multiple-access MIMO system, a MIMO system that employs OFDM, and so on)." EX1007, ¶10.

153. Walton040 Figure 2A "is a block diagram of a base station 104 and two terminals 106 within system 100 for downlink data transmission." *Id.*, ¶76.

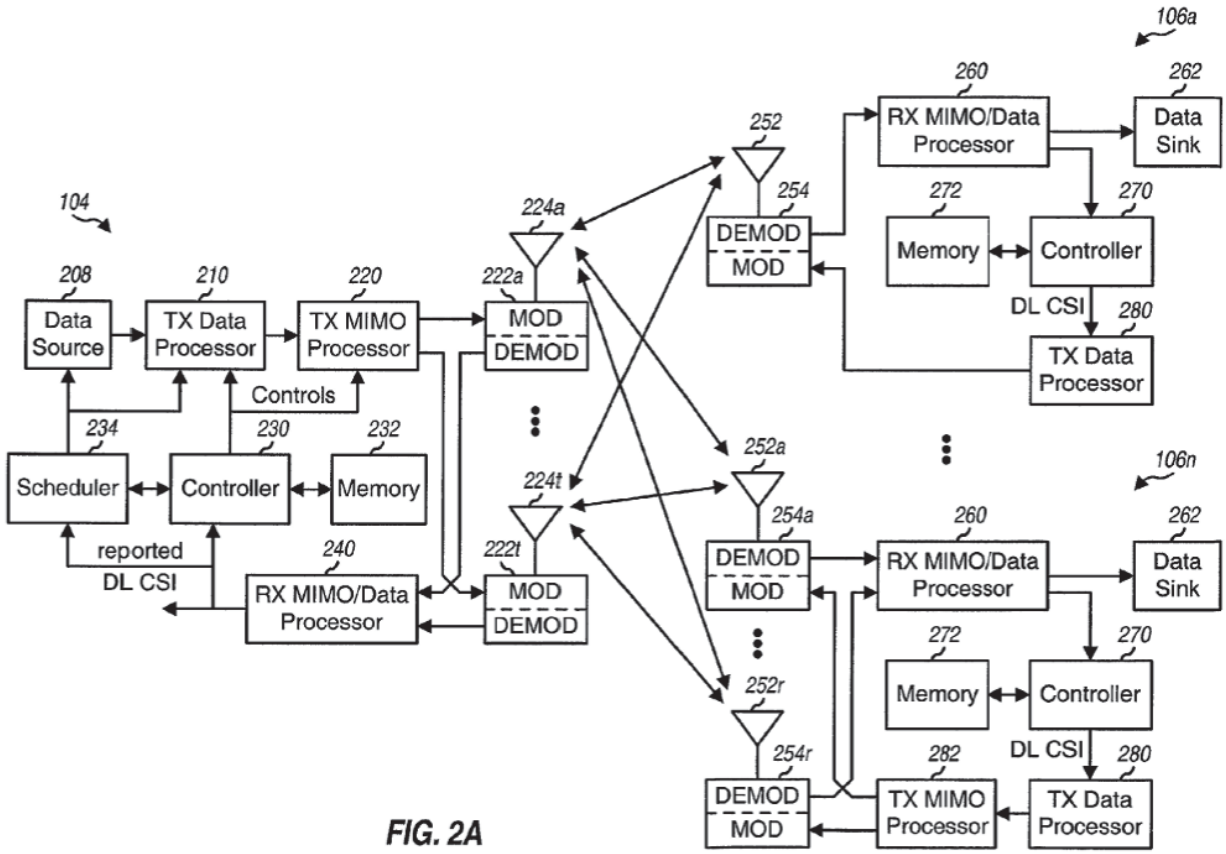

FIG. 2A

EX1007, FIG. 2A.

154. Walton040 explains that "[t]he use of multiple antennas at both the transmitter unit and receiver unit (i.e., $N_R \times N_T$ MIMO) is an effective technique for enhancing the capacity of multiple-access systems (e.g., cellular, PCS, LAN, and so

Ford Motor Co.
Exhibit 1003
Page 086

on). Using MIMO, a transmitter unit may send multiple independent data streams on the same communication channel to a single or multiple receiver units by exploiting the spatial dimensionality of the communication channel coupling the transmit and receive antennas." EX1007, ¶55.

TABLE 1

Transmit Antennas	Receive Antennas 1	Receive Antennas N_R
1	SISO	SIMO
N_T	MISO	MIMO

EX1007, Table 1.

155. Walton040 also describes techniques to adaptively process data prior to transmission, based on channel state information, to match the data transmission more closely to the capacity of the channel. EX1007, Abstract. For example, Walton040 discloses that "[f]or both the downlink and uplink, the base station may control access to the system by allocating and de-allocating resources to users (e.g., on a demand basis). When users are allocated resources, information may be provided to the users via a control channel to indicate the particular operating mode to use. Moreover, the system may adjust various operating parameters (e.g., the operating mode, channel, data rate, antenna(s) to transmit from, transmit power, and so on) in an adaptive manner based on system loading and/or some combination of performance metrics, as described below." *Id.*, ¶74

156. Moreover, Walton040 explains that the base station may select a coding and modulation scheme for data streams to be transmitted to terminals based on signal-to-noise-plus-interference ratios (SNRs) and convey the "schedule, antenna assignments, coding and modulation schemes, other information, or any combination thereof" to the scheduled terminals via a control channel (step 928). *Id.*, ¶482.

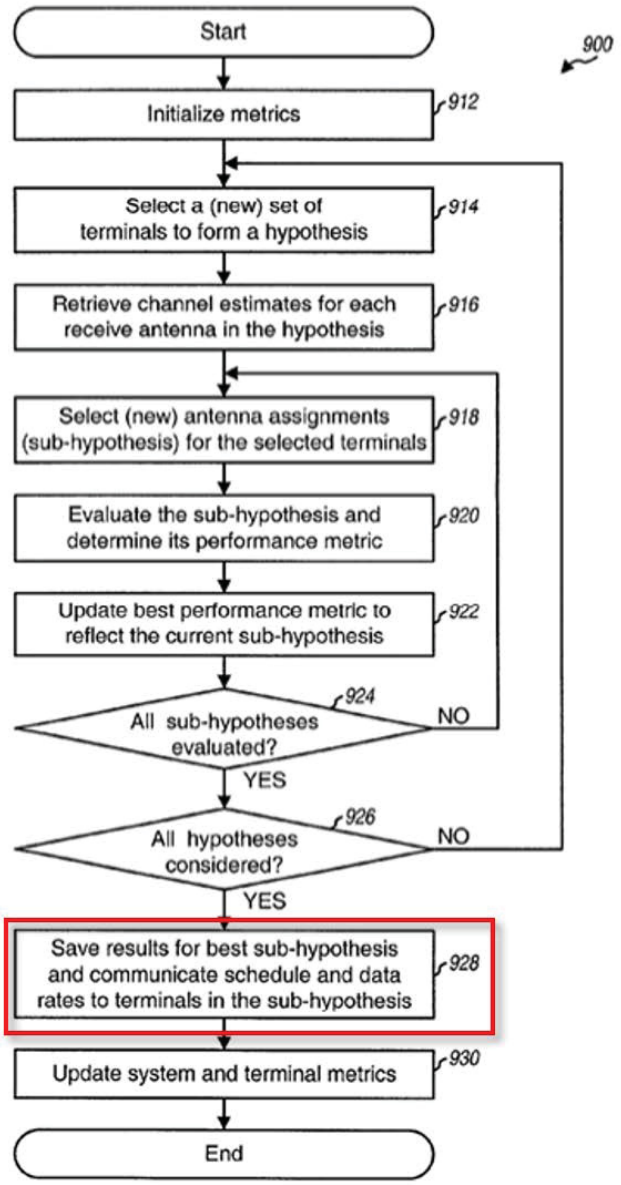

FIG. 9A

EX1007, FIG. 9A.

D. Li017

157. Li017 is directed to "multi-cell, multi-subscriber wireless systems using orthogonal frequency division multiplexing (OFDM)." EX1009, ¶2.

158. Like Walton040, Li017 explains that "[i]n one embodiment, each subscriber measures the SINR of each subcarrier cluster and reports these SINR measurements to their base station through an access channel. The SINR value may comprise the average of the SINR values of each of the subcarriers in the cluster." *Id*., ¶45.

159. "Upon receiving the feedback from a subscriber, the base station further selects one or more clusters for the subscriber among the candidates (processing block 104). The base station may utilize additional information available at the base station, e.g., the traffic load information on each subcarrier, amount of traffic requests queued at the base station for each frequency band, whether frequency bands are overused, and how long a subscriber has been waiting to send information. The subcarrier loading information of neighboring cells can also be exchanged between base stations. The base stations can use this information in subcarrier allocation to reduce inter-cell interference." *Id*., ¶47.

160. For example, Li017 explains that "there are two categories of clusters: coherence clusters, containing multiple subcarriers close to each other and diversity clusters, containing multiple subcarriers with at least some of the subcarriers spread far apart over the spectrum. The closeness of the multiple subcarriers in coherence clusters is preferably within the channel coherence bandwidth, i.e. the bandwidth within which the channel response remains roughly the same, which is typically

within 100 kHz for many cellular systems. On the other hand, the spread of subcarriers in diversity clusters is preferably larger than the channel coherence bandwidth, typically within 100 kHz for many cellular systems. Of course, the larger the spread, the better the diversity. Therefore, a general goal in such cases is to maximize the spread." *Id*., ¶111.

161. Li017's Figure 9 "illustrates exemplary cluster formats for coherence clusters and diversity clusters for Cells A-C. Referring to FIG. 9, for cells A-C, the labeling of frequencies (subcarriers) indicates whether the frequencies are part of coherence or diversity clusters. For example, those frequencies labeled 1-8 are diversity clusters and those labeled 9-16 are coherence clusters. For example, all frequencies labeled 1 in a cell are part of one diversity cluster, all frequencies labeled 2 in a cell are part of another diversity cluster, etc., while the group of frequencies labeled 9 are one coherence cluster, the group of frequencies labeled 10 are another coherence cluster, etc. The diversity clusters can be configured differently for different cells to reduce the effect of inter-cell interference through interference averaging." *Id*., ¶112.

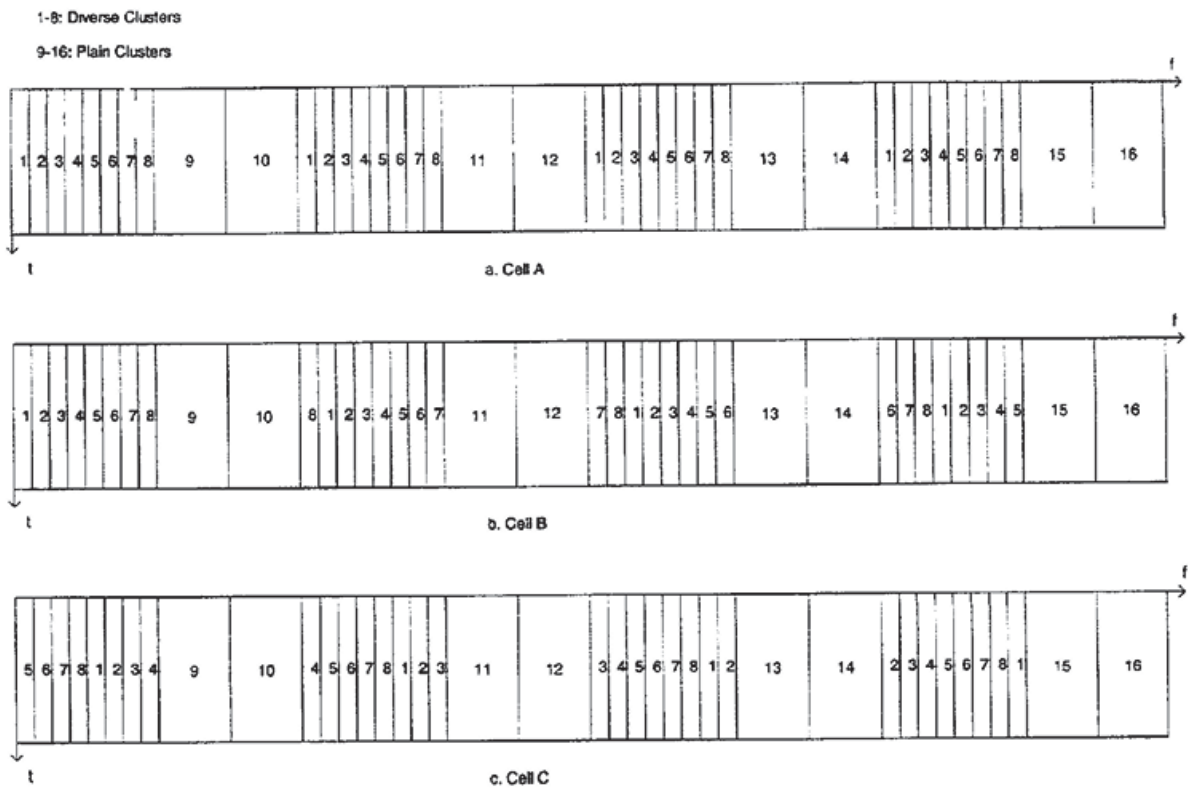

Figure 9

EX1009, FIG. 9.

162. "Referring to FIG. 11, processing logic in the base station performs channel/interference variation detection (processing block 1101). Processing logic then tests whether the results of the channel/interference variation detection indicate that the user is mobile or in a fixed position close to the edge of the cell (processing block 1102). If the user is not mobile or is not in a fixed position close to the edge of the cell, processing transitions to processing block 1103 where processing logic in the base station selects coherence clusters; otherwise, processing transitions to processing block 1104 in which processing logic in the base station selects diversity clusters." EX1009, ¶121.

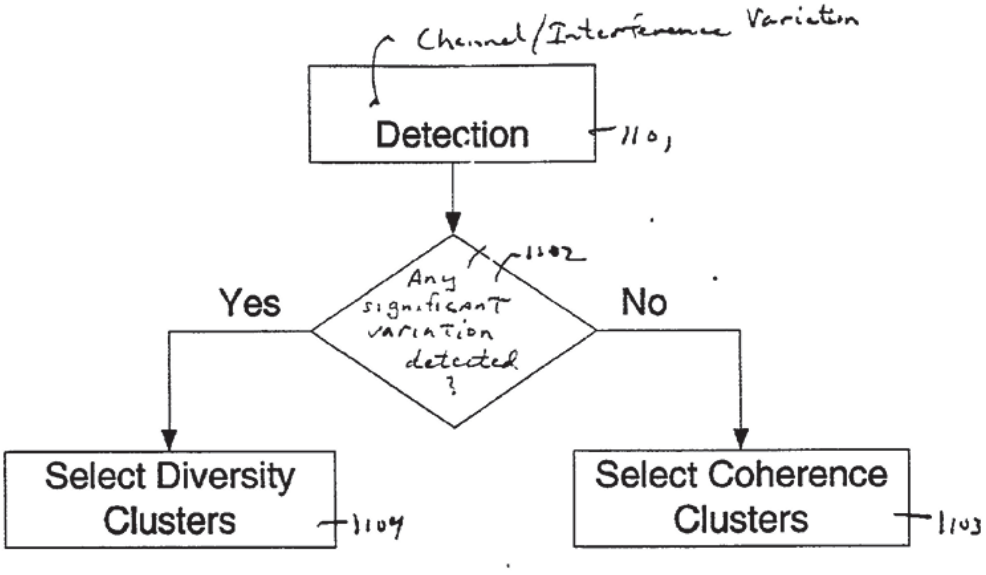

Figure 11

EX1009, Fig. 11.

163. "After cluster selection, the base station notifies the subscriber about the cluster allocation through a downlink common control channel or through a dedicated downlink traffic channel if the connection to the subscriber has already been established (processing block 105). In one embodiment, the base station also informs the subscriber about the appropriate modulation/coding rates." *Id.*, ¶48.

E. Tufvesson

164. As an initial matter, I understand that Tufvesson, on its face, indicates that it was published by the IEEE in 1997. EX1010, 1639. In addition, EX1010 is a printout from IEEE Xplore (https://ieeexplore.ieee.org/document/605836). The copy of Tufvesson was obtained from the IEEE and attached as Exhibit A to the Declaration of Gordon MacPherson regarding "F. Tufvesson and T. Maseng; 'Pilot

assisted channel estimation for OFDM in mobile cellular systems', 1997 IEEE 47th Vehicular Technology Conference. Technology in Motion, May 4 – 7, 1997." EX1033.

165. It is my understanding that Tufvesson was published in the 1997 IEEE 47th Vehicular Technology Conference. Technology in Motion. The 1997 IEEE 47th Vehicular Technology Conference. Technology in Motion was held from May 4 – 7, 1997 and copies of the conference proceedings were made available no later than the last day of the conference. EX1033, 2.

166. I note that as indicated by IEEE Xplore for Tufvesson, it was made available to the public for download at least as early as August 6, 2002. EX1033, Exhibit A, 2 ("Date Added to IEEE *Xplore*: 06 August 2002). IEEE Xplore also identifies "IEEE" as the "Publisher" and provides a Print ISBN of 0-7803-3659-3 and a Print ISSN of 1090-3038. *Id*; *see also* EX1034.

167. As I noted above, prior to February 2004, IEEE Xplore was well-known to a POSITA, and a POSITA would have been familiar with using IEEE Xplore to discover and obtain publications of interest, including Tufvesson. Indeed, IEEE is a well-known, reputable publisher of scientific and technical publications relied on by professionals from all over the world as a trustworthy source. Members in the scientific and technical communities who publish or engage in research, including myself, rely on the information provided by IEEE publications.

168. Tufvesson is directed to pilot-assisted channel estimation for OFDM in mobile cellular systems. EX1010, Tufvesson, 1639. In particular, Tufvesson explains that the "mobile channel introduces multipath distortion of the signalling waveforms. Both the amplitude and phase are corrupted and the channel characteristics changes because of movements of the mobile. In order to perform coherent detection, reliable channel estimates are required. These can be obtained by occasionally transmitting known data or so called 'pilot symbols'. The receiver interpolates the channel information derived from the pilots to obtain the channel estimate for the data signal, see Fig. 1." *Id.*

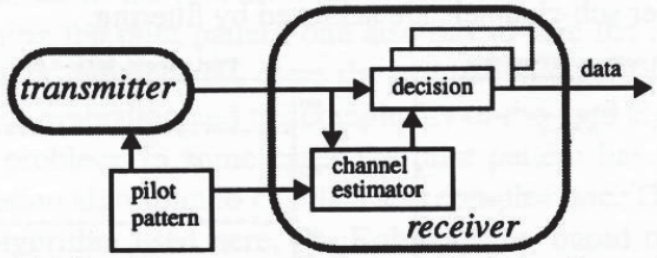

Fig. 1 The pilot pattern is known both by the receiver and the transmitter. The purpose is to minimize the number of transmitted pilot symbols without increasing the bit error rate.

EX1010, Fig. 1.

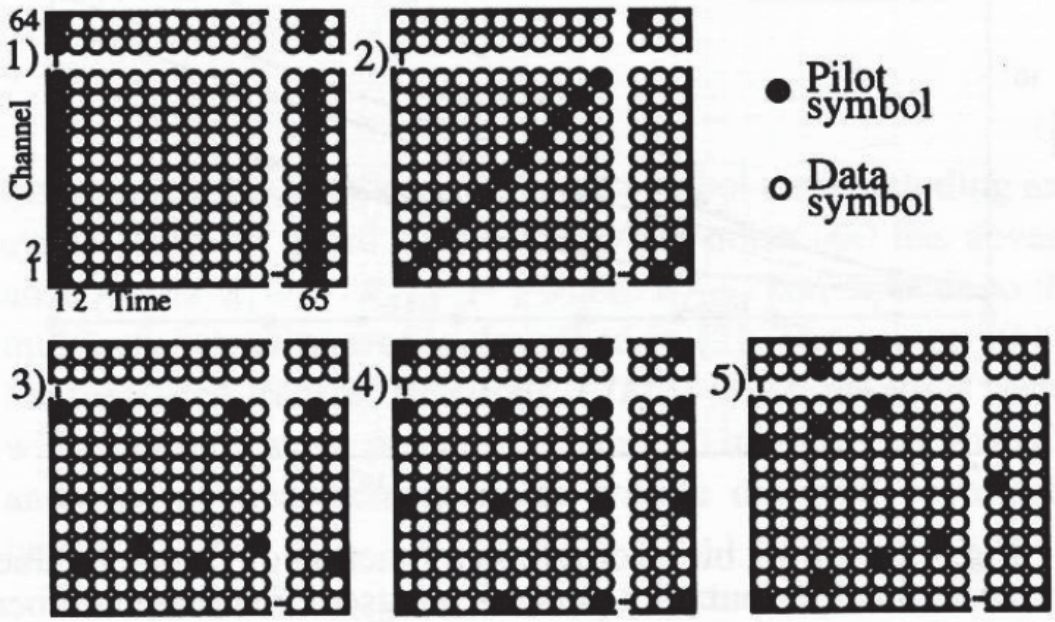

Fig. 2 Examples of pilot patterns analyzed.

EX1010, Fig. 2.

169. Tufvesson notes that "[t]o minimize the bit error rate it is desirable to spread the pilot symbols both in time and in frequency, as seen in Fig. 4 and Fig. 5. Normally a worst case design is made for the channel estimation system and then we suggest to tailor the pilot pattern to each base station site. A suitable pilot pattern can be calculated once the propagation environment and maximum expected speed in the particular cell is known." *Id.*, 1641. Thus, the pilot pattern used is among the information transferred to a mobile station when it logs into a new cell and then, once known, is used for channel estimation. *Id.*, 1639, 1641.

VIII. GROUND 1: Claims 1-14 are unpatentable under 35 U.S.C. § 103 as obvious over 802.16a, alone or in combination with Heath

A. A POSITA would have been motivated to combine 802.16a-2001 and 802.16a-2003

170. In my opinion, a POSITA would have found it at least obvious to combine 802.16a-2001 and 802.16a-2003. But more specifically, a POSITA would have understood 802.16a-2001 and 802.16a-2003 to be considered as a single document based on the explicit statements in 802.16a-2003.

171. For example, 802.16a-2003 explains that it "amends IEEE Std 802.16-2001 by enhancing the medium access control layer and providing additional physical layer specifications in support of broadband wireless access at frequencies from 2-11 GHz." EX1006, cover, iii ("This amendment expands the scope of IEEE Std 802.16-2001 by extending the WirelessMAN air interface to address operational frequencies from 2-11 GHz."). 802.16a-2003 also contains specific editing instructions that "define how to merge the material contained herein into the existing base standard (IEEE Std 802.l6™-2001) to form the comprehensive standard." 802.16a-2003, 1.

172. In my opinion, these explicit statements would have motivated a POSITA to combine 802.16a-2003 with 802.16-2001 to form a single document/standard, which I refer to above and below as "802.16a."

B. A POSITA would have been motivated to combine 802.16a and Heath

173. As I described above, 802.16a is directed to an OFDM communication system having a BS and SS with multiple antennas. *See*, *e.g.*, EX1006, 66-68, 179, 203-205; *see supra* VII.A.

174. For example, Figure 128bf illustrates a BS having multiple transmit antennas. I note that while Figure 128bf illustrates an SS with a single antenna, 802.16a discloses that SSs may have multiple antennas. *See id.*, 131 (describing "receive diversity"), 204 (describing two receive antennas "2Rx").

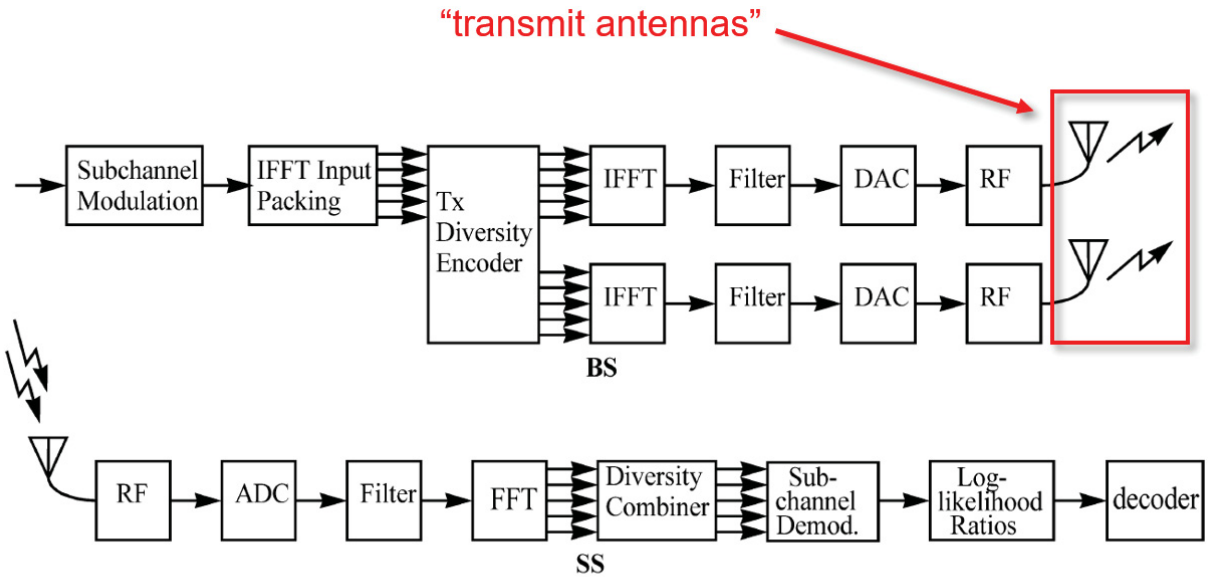

Figure 128bf—Illustration of STC

EX1006, FIG. 128bf (annotated).

175. 802.16a also explains that the BS can communicate with subscribers with the multiple antennas using different antenna schemes, including transmit

diversity (space time coding (STC)) and adaptive antenna systems (AAS). *Id*., 203-205 (describing STC), 66-68 (describing AAS).

176. 802.16a's AAS uses more than one antenna element to "improve range and system capacity, by adapting the antenna pattern and concentrating its radiation to each individual subscriber." EX1005, 66. According to 802.16a, "[t]he spectral efficiency can be increased linearly with the number of antenna elements. This is achieved by steering beams to multiple users simultaneously to realize an in-cell frequency reuse of one and an in-cell reuse factor proportional to the number of antenna elements." *Id*. In my opinion, a POSITA would have readily understood 802.16a's AAS to be a "multiple-input multiple-output (MIMO) scheme" because it uses multiple transmit antennas to steer different beams to multiple users simultaneously so as to increase spectral efficiency.

177. I note that 802.16a's description of AAS is consistent the '941 patent, which does not define or describe the claimed "multiple-input multiple-output (MIMO) scheme" in any detail. Instead, the '941 patent simply states that "multiple antenna techniques such as multiple-input multiple-output (MIMO) schemes are used to improve transmission throughput in favorable channel conditions." EX1001, 6:60-65. In my opinion, a POSITA would have readily understood that 802.16a's AAS scheme is similarly "a multiple-input multiple-output (MIMO) scheme"

because it is used to improve transmission throughput in favorable channel conditions.

178. In particular, a POSITA would have understood 802.16a's AAS to be a multi-user MIMO scheme. For example, Walton040 describes what a POSITA would have understood at the time, stating that for "MIMO (Multiple-Input, Multiple-Output)—the RF link is characterized by multiple transmit antennas and multiple receive antennas." EX1007, ¶61. And specifically, in "[s]patial multiplexing, multi-user (multi-user MIMO mode)," like 802.16a's AAS, "multiple transmit and receive antennas [] accommodate communication with multiple terminals concurrently on the same channel." *Id.*, ¶65.

179. I note, however, that 802.16a does not explicitly disclose details of how to select the appropriate antenna scheme—STC or AAS. In my opinion, a POSITA would have thus been motivated to look at the prior art, e.g. Heath, for techniques for selecting the appropriate antenna scheme. EX1007, 1:46-51.

180. Like 802.16a, Heath discloses the use of a transmit diversity scheme. Heath, 1:33-43 ("Because the transmission antennas are spatially separated, the receiving device receives diverse signals that can be processed to reduce multipath fading and to suppress interfering signals."). Heath also discloses use of a MIMO scheme (spatial multiplexing). EX1007, Abstract, 2:11-22 ("A system and method for wireless communications adapts its mode of operation between spatial

multiplexing and non-spatial multiplexing in response to transmission-specific variables. ….”).

181. Moreover, Heath emphasized the importance of selecting the appropriate antenna scheme depending on transmission conditions. EX1007, Abstract. For example, Heath states that “[a]lthough diversity communication may reduce the effects of multipath fading, diversity does not enable the increased bit rates that are enabled by spatial multiplexing.” EX1007, 8:18-21. However, using “multiple spatially separated antennas at the base transceiver stations and the subscriber units to multiplex transmissions” “**increase[s] the bit rates between the base transceiver stations and the subscriber units**.” *Id*., 1:46-51 (emphasis added), 1:55-59 (“[S]patial multiplexing works well to increase the bit rate between base transceiver stations and subscriber units that support spatial multiplexing….”). Heath further explains that “[a]lthough spatial multiplexing [MIMO] works well to increase the bit rate between base transceiver stations and subscriber units that support spatial multiplexing …, it may not be appropriate to utilize spatial multiplexing for every transmission. For example, transmission conditions may be such that spatial multiplexing provides poor results, thereby eliminating the possibility of an increased bit rate that is provided by spatial multiplexing.” *Id.*, 1:55-65.

182. In view of the importance of selecting the appropriate antenna scheme depending on transmission conditions, Heath's base station utilizes mode determination logic 454 to determine whether to use a transmit diversity (non-spatial multiplexing) or MIMO (spatial multiplexing) scheme based on transmission characteristics 450. EX1007, 9:60-10:1 ("Upon consideration of one, or a combination, of the transmission-specific variables, the mode determination logic outputs 456 an indication of the operation mode (either spatial multiplexing or non-spatial multiplexing) for a subsequent transmission. Because the mode determination logic determines the mode of operation in response to a measured transmission characteristic, or characteristics, the system adapts to utilize a mode of operation that is preferred for the current set of conditions.").

183. Figure 4 of Heath illustrates "transmission-specific inputs 450 and 452 that are considered by the mode determination logic 454 to determine the appropriate mode of operation for subsequent datastream transmissions." *Id.*, 9:15-18.

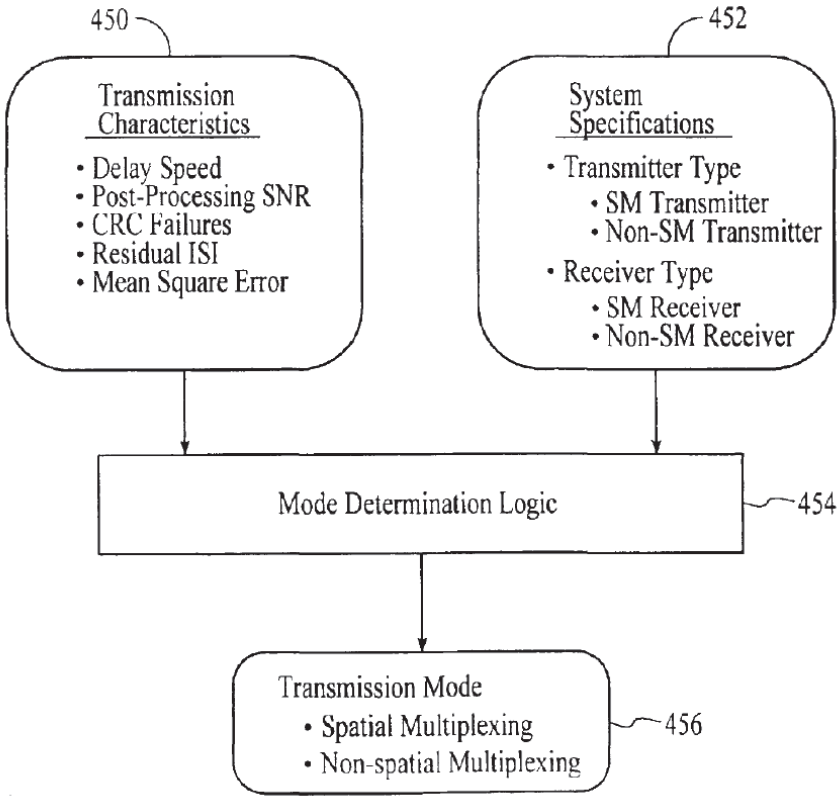

FIG. 4

EX1007, FIG. 4.

184. Heath's base station also includes a mode switch that dictates the mode of operation for subsequent subscriber data transmissions in accordance with the mode determination logic and conveys the selected transmission mode to the mobile station via the control channel. EX1007, 11:67-12:38, 14:55-63, 2:58-61 ("[M]ode determination information is communicated between the base transceiver station and the subscriber unit over a control channel that includes a dedicated mode identification field."), 3:60-62 ("the control channel is used to indicate a change in the mode of operation between spatial multiplexing and non-spatial multiplexing.").

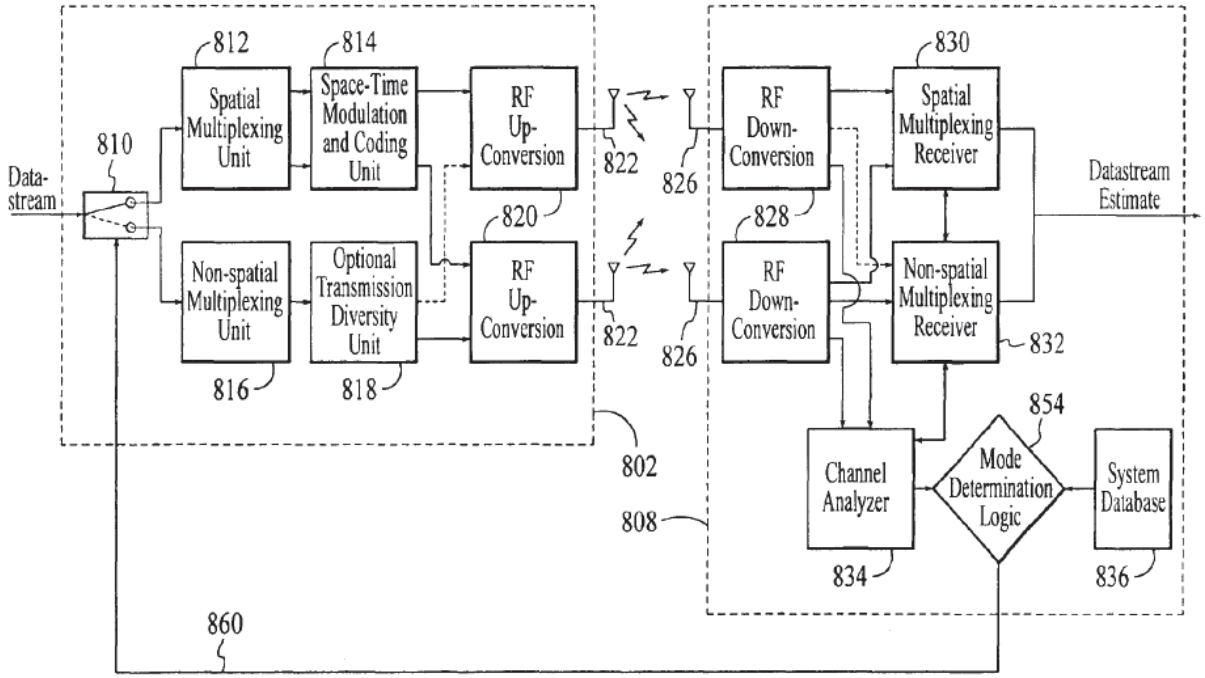

FIG. 8

EX1007, Fig. 8.

185. 802.16a and Heath thus both disclose a BS having multiple antennas that can operate in a transmit diversity scheme or MIMO scheme, and inform the mobile station of the selected scheme via a control channel.

186. In my opinion, a POSITA would have been motivated to modify 802.16a so as to incorporate Heath's mode determination logic based on the teachings of Heath. Doing so would have required minimal modifications. In particular, it would have been obvious to modify 802.16a's BS to incorporate the mode determination logic and switch to select the appropriate antenna scheme based on existing CSI, and to inform the SS of the selected antenna transmission scheme

in the existing FCH using DL-Map. EX1007, 2:58-61 ("[E]ven when a base transceiver station and a subscriber unit both support spatial multiplexing, it may not be appropriate to utilize spatial multiplexing for every transmission."), 3:60-62 ("In an embodiment, the control channel is used to indicate a change in the mode of operation between spatial multiplexing and non-spatial multiplexing."); *see supra* VII.B.

187. In my opinion, modifying 802.16a with Heath's mode determination logic and communicating the selected mode over the control channel would have required minimal modifications. For example, by incorporating Heath's mode determination logic to select the appropriate antenna transmission scheme already present—STC or AAS—using the existing CSI, and indicating which scheme to use via DL-Map as 802.16a teaches. *See supra* VII.A.

188. As an example, a POSITA would have readily understood that in 802.16a's communication system, it would be preferable to utilize transmit diversity (STC) when the transmission conditions are susceptible to fading and/or multipath or when CSI is not available to the BS. EX1007 1:33-43 ("…Because the transmission antennas are spatially separated, the receiving device receives diverse signals that can be processed to reduce multipath fading and to suppress interfering signals."); *see also* EX1008, ¶103 ("The use of multiple transmit antennas for a

given data stream increases diversity and improves reliability against deleterious path effects.”).

189. A POSITA would have also known that it would have been preferable to utilize AAS, for example, when 802.16a’s BS is in communication with multiple SSs and CSI is available to the BS. By utilizing AAS, 802.16a’s BS is able to “improve range and system capacity.” EX1006, 66; *see also* EX1008, ¶543 (“In the multi-user MIMO mode, the scheduling schemes are able to exploit multi-user selection diversity to achieve improved performance (i.e., higher throughput) even though each terminal uses linear spatial (e.g., MMSE) processing technique. In fact, the multi-user diversity in the multi-user MIMO mode results in an average downlink throughput that exceeds the throughput achieved by dividing a transmission interval into four equal-duration sub-slots and assigning each MIMO terminal to a respective sub-slot.”).

190. Should Patent Owner argue that the claimed “multiple-input multiple-output (MIMO) scheme” requires something different from the AAS MIMO scheme taught by 802.16a, I disagree for the reasons noted above. But regardless, Heath also discloses the claimed “multiple-input multiple-output (MIMO) scheme” and, in my opinion, it would have been obvious to a POSITA to modify 802.16a in view of Heath.

191. Heath, in particular, discloses use of spatial multiplexing. *Id.*, Abstract, 2:11-22. A POSITA would have understood that Heath's spatial multiplexing is a type of multi-input multi-output (MIMO) scheme referred to as a single-user MIMO scheme. *See* EX1008, ¶64 ("Spatial multiplexing, single-user (single-user MIMO mode)—the use of both multiple transmit and receive antennas to achieve high data rates for a single terminal by creating multiple parallel transmission channels by exploiting the spatial dimensionality of the communication channel.").

192. Figure 2 of Heath illustrates a spatially multiplexed transmission between a base transceiver station and subscriber unit:

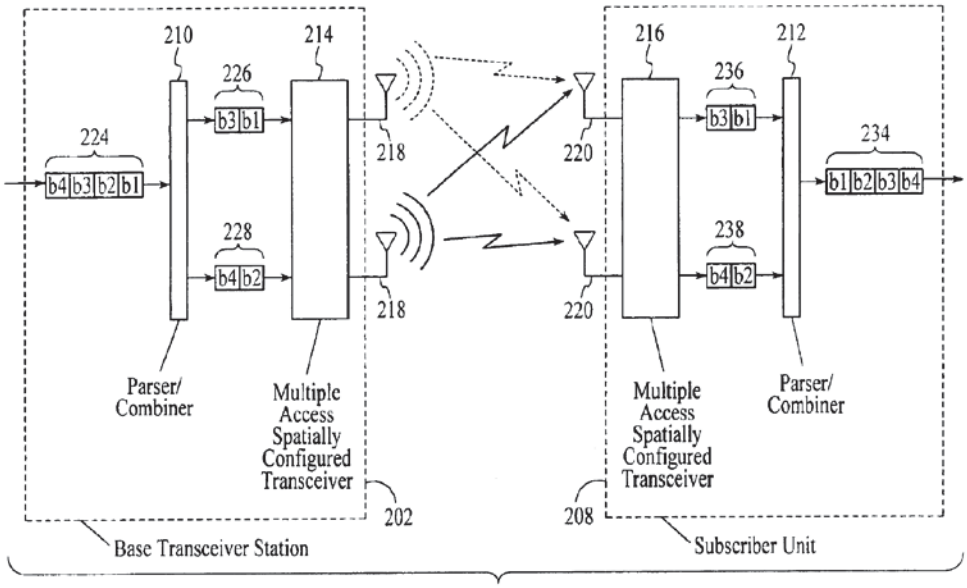

FIG. 2

EX1007, FIG. 2.

193. In my opinion, a POSITA would have also been motivated to modify 802.16a so as to incorporate Heath's spatial multiplexing, single-user MIMO,

scheme at least for the ability to increase the bit rate between a base transceiver station and a single SS, based on the teachings of Heath. EX1007, 1:55-65. Such a modification would have also incorporated Heath's teaching of informing the SS of the switch to single-user MIMO via the existing FCH using DL-Map so that the SS may properly receive and decode the data. *Id.*, 2:58-61, 3:60-62.

194. In my opinion, modifying 802.16a to also include Heath's spatial multiplexing ("single-user MIMO") mode would have required minimal modifications. For example, by incorporating Heath's spatial multiplexing unit to output data for transmission over 802.16a's existing antennas and indicating the use of spatial multiplexing to the SS via DL-Map (e.g., with a spatial multiplexing information element). Using the example above, a POSITA would have known that it would have been preferable to utilize a single-user MIMO scheme as taught by Heath when 802.16a's BS is in communication with a single SS and CSI is available to the BS to achieve an increased bit rate. EX1007, 1:46-51; *see also* EX1008, ¶544 ("[T]he ability to accommodate both single-user and multi-user MIMO modes provides added flexibility in the provisioning of wireless data services.").

195. In addition to the motivations I described above, a POSITA would have been further motivated to combine 802.16a and Heath because both are in the same general field of mobile communications, and address the same problem—improving the performance of wireless communication systems. Moreover, as evident from the

above discussion, a POSITA would have combined the system of 802.16a with the teachings of Heath by using known methods, and the results of the combination would have been predictable to a POSITA (e.g., by including Heath's antenna transmission scheme selection logic and communication of the selected scheme over the control channel with or without the spatial multiplexing unit).

196. Lastly, the proposed combination of 802.16a and Heath would involve nothing more than incorporating a well-known concept (i.e., Heath's antenna transmission scheme selection logic and communication of the selected scheme over the control channel with or without the spatial multiplexing unit) into a well-known system (i.e., 802.16a's wireless communication system).

C. 802.16a, alone or in view of Heath, renders obvious claim 1

197. Claim 1 is an independent claim. For purposes of my analysis, and ease of review, I have separated claim 1 into component parts, which I identify in brackets for reference:

> [1A] A link adaptation method by a base station serving a plurality of mobile stations in an Orthogonal Frequency Division Multiplexing (OFDM) communication system, the communication system utilizing a transmission structure with time slots in the time domain and frequency subchannels in the frequency domain, the method comprising:
>
> [1B] transmitting a control message to a mobile station over a control channel, wherein:

[1C] the control message contains transmission parameters allocated to the mobile station for a subsequent transmission of data by the base station over a frequency subchannel to the mobile station in a time slot; and

[1D] the mobile station-specific transmission parameters indicate an antenna transmission scheme and

[1E] *the mobile station-specific transmission parameters indicate* … a corresponding subchannel configuration,

[1F] the antenna transmission scheme comprising a transmission diversity scheme or a multiple-input multiple-output (MIMO) scheme and

[1G] the corresponding subchannel configuration characterized by distributed subcarriers or localized subcarriers in the frequency domain; and

[1H] transmitting a data packet to the mobile station over the frequency subchannel in accordance with the mobile station-specific transmission parameters.

198. As I demonstrate below, it is my opinion that each and every element of independent claim 1 was well-known in the art prior to the ’941 patent, and that claim 1 would have been obvious over the art.

1. Claim 1 Preamble (Element [1A]): A link adaptation method by a base station serving a plurality of mobile stations in an Orthogonal Frequency Division Multiplexing (OFDM) communication system, the communication system utilizing a transmission structure with time slots in the time domain and frequency subchannels in the frequency domain, the method comprising:

199. In my opinion, 802.16a discloses this preamble.

200. 802.16a discloses a base station serving multiple mobile stations ("subscriber stations"/"subscribers"/"SS") in an Orthogonal Frequency Division Multiplexing (OFDM) communication system utilizing a transmission structure with time slots (*k*) in the time domain and frequency subchannels in the frequency domain. For example, 802.16a's WirelessMAN-OFDMA is based on OFDM modulation utilizing a transmission structure with time slots in the time domain and frequency subchannels in the frequency domain. *See generally* EX1006, 179-226 (Chapter 8.5).

201. Figures 128av and 128ax illustrate frame structures for BS to SS transmissions:

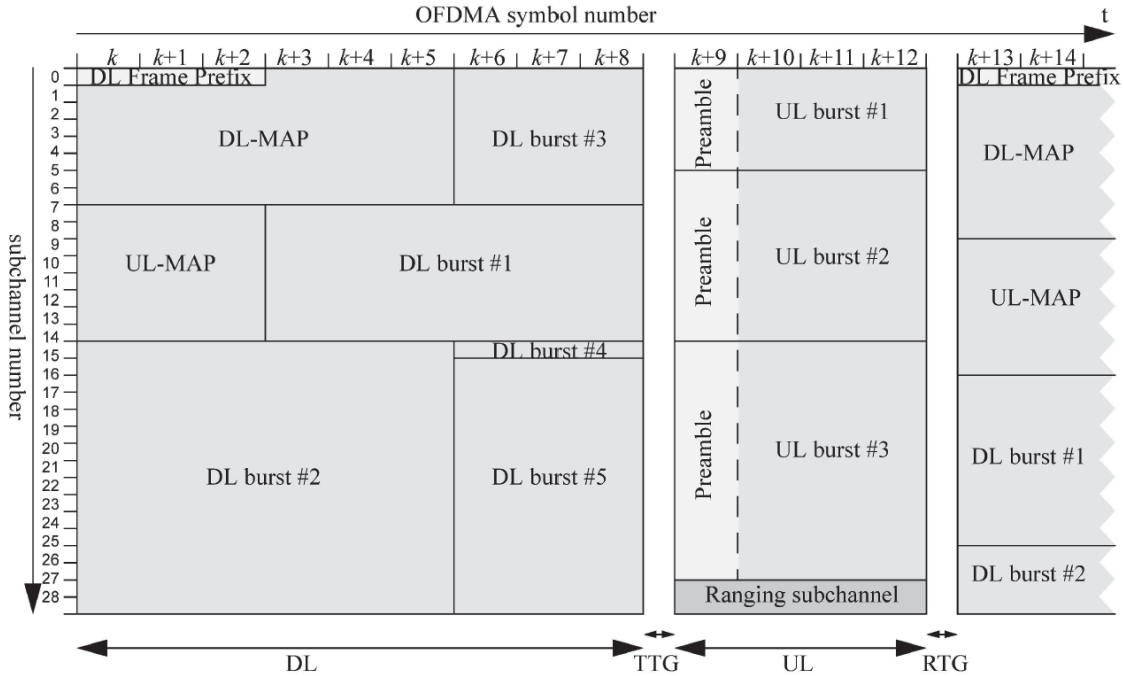

Figure 128av—Time plan - one TDD time frame

EX1005, FIG. 128av.

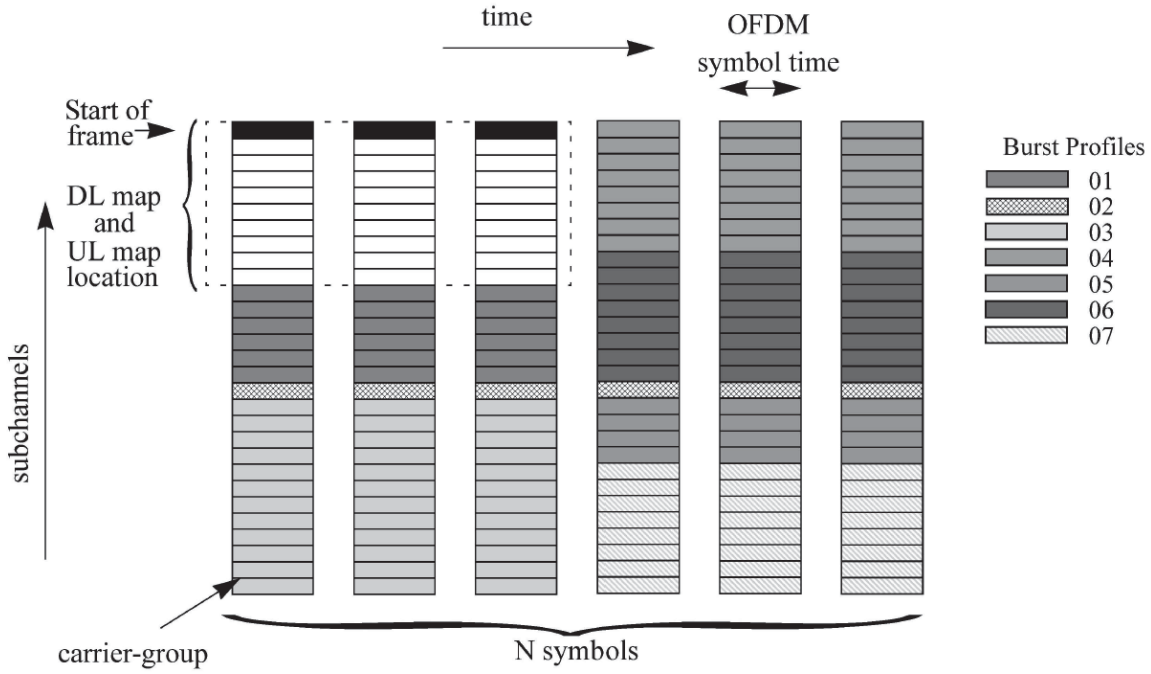

Figure 128ax—Example of OFDMA DL and UL map location

EX1005, FIG. 128ax.

202. 802.16a also discloses a link adaptation method performed by the base station according to its capabilities, mobile station capabilities, and channel state information (CSI). EX1005, 4 ("adaptive modulation: A system's ability to communicate with another system using multiple burst profiles and a system's ability to subsequently communicate with multiple systems using different burst profiles") ("adaptive antenna system (AAS): A system adaptively exploiting more than one antenna to improve the coverage and the system capacity"), 42 ("The AAS Channel Feedback Request message shall be used by a system supporting AAS and operating in FDD mode. It may also be used by a system supporting AAS and operating in TDD mode. This message serves to request channel measurement that will help in adjusting the direction of the adaptive array"), 67 ("Adaptive Arrays use channel state information in the PHY at both downlink and uplink"), 83 ("The downlink burst profile is determined by the BS according to the quality of the signal that is received by each SS"), 189 ("an STC enabled BS"), 197 ("AAS-enabled SS"), 200-221 (describing channel quality measurements).

203. Therefore, 802.16a discloses a "link adaptation method by a base station serving a plurality of mobile stations in an Orthogonal Frequency Division Multiplexing (OFDM) communication system, the communication system utilizing a transmission structure with time slots in the time domain and frequency subchannels in the frequency domain."

2. Element [1B]: transmitting a control message to a mobile station over a control channel, wherein:

204. In my opinion, 802.16a discloses [1B].

205. For example, 802.16a discloses that the downlink from the base station to a mobile station "includes the transmission of a FCH [frame control header], which is transmitted in the most robust burst profile of the system followed by transmission using burst profiles as defined in the FCH." EX1006, 183. This FCH is "transmitted at the beginning of each frame" from the base station to the mobile station and "contains the DL-MAP message and may additionally include the UL-MAP, DCD or UCD messages." *Id*., 184, 67 ("[A] SS attempts to obtain the downlink parameters by decoding the DL-MAP and DCD messages.").

206. "The DL-MAP message defines the access to the downlink information" and can include a number of information elements depending on the physical layer (PHY) specification implemented. EX1005, 46. Table 15 illustrates the DL-Map message format:

Table 15—DL-MAP message format

Syntax	Size	Notes
DL-MAP_Message_Format() {		
Management Message Type = 2	8 bits	
PHY Synchronization Field	Variable	See appropriate PHY specification.
DCD Count	8 bits	
Base Station ID	48 bits	
Number of DL-MAP Elements *n*	16 bits	
Begin PHY Specific Section {		See applicable PHY section.
for (i = 1; i <= n; i++) {		For each DL-MAP element 1 to n.
DL_MAP_Information_Element()	Variable	See corresponding PHY specification.
if !(byte boundary) {		
Padding Nibble	4 bits	Padding to reach byte boundary.
}		
}		
}		
}		

EX1005, Table 15.

207. Figures 128av and 128ax illustrate frame structures for BS to SS transmissions, including DL-Map at the start of the frame:

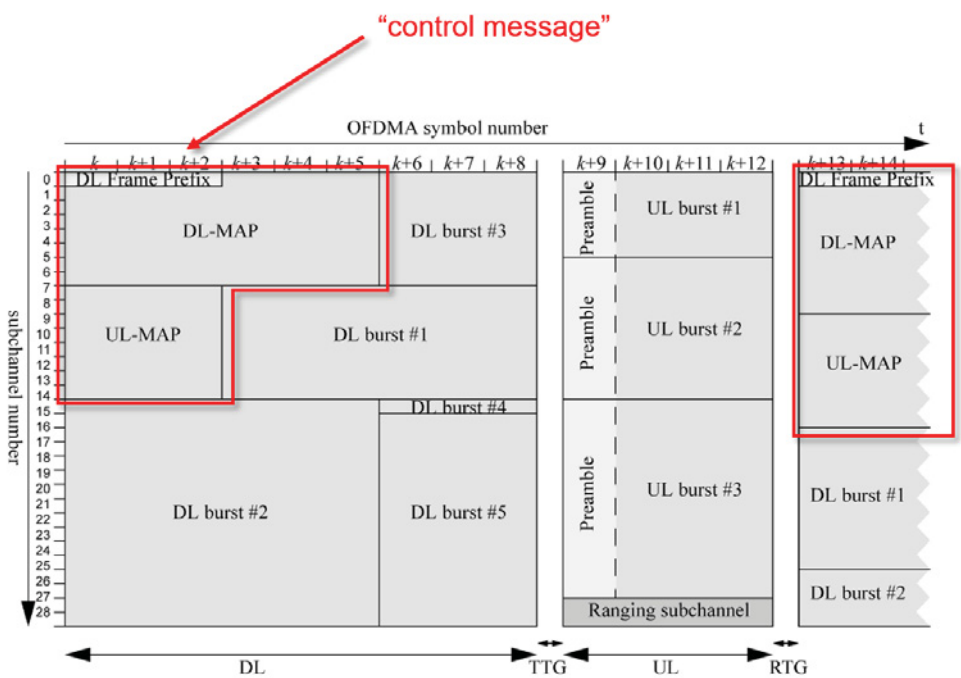

Figure 128av—Time plan - one TDD time frame

EX1006, FIG. 128av.

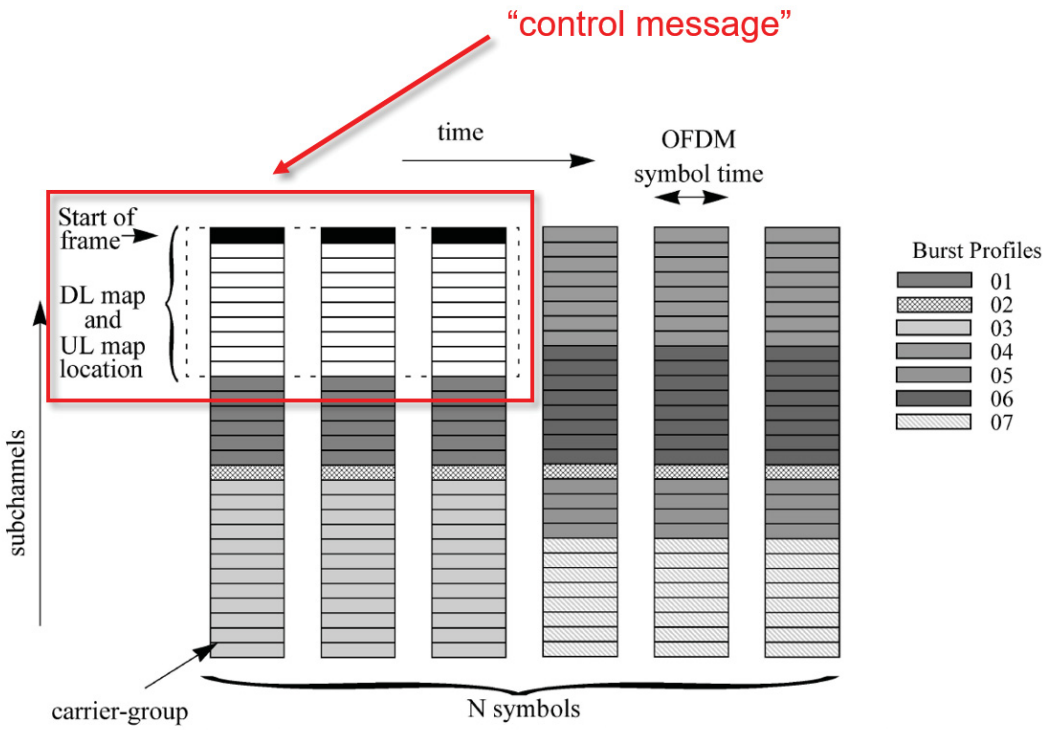

Figure 128ax—Example of OFDMA DL and UL map location

EX1006, FIG. 128ax.

208. In my opinion, a POSITA would have understood that the FCH of 802.16a is transmitted over a "control channel."

209. First, the 802.16a's description of transmitting the FCH is consistent with the description in the '941 patent of a control channel. In particular, I note that the '941 patent does not define the claimed "control channel." The '941 patent instead simply explains that when "transmitting the control message between the transmitter and receiver," the "**forward control link** is defined here as the transmission of the AMCTP indicator from the transmitter to the receiver, and a return control channel is defined as the transmission of CQI, as the feedback

information, from the receiver to the transmitter, as shown in FIG. 4." EX1001, 7:25-38 (emphasis added). And that the "AMCTP indicator on the forward link can be sent either separately or jointly"—it "can be embedded in the data transmission" or it "is transmitted on a separate control channel with stronger error protection." *Id*.

210. Figure 6 of the '941 patent shows an example of the AMCTP indicator 602 and associated data transmission 406 "on a forward link from the transmitter to the receiver, and CQI 606 … on a return channel." *Id*., 4:41-45.

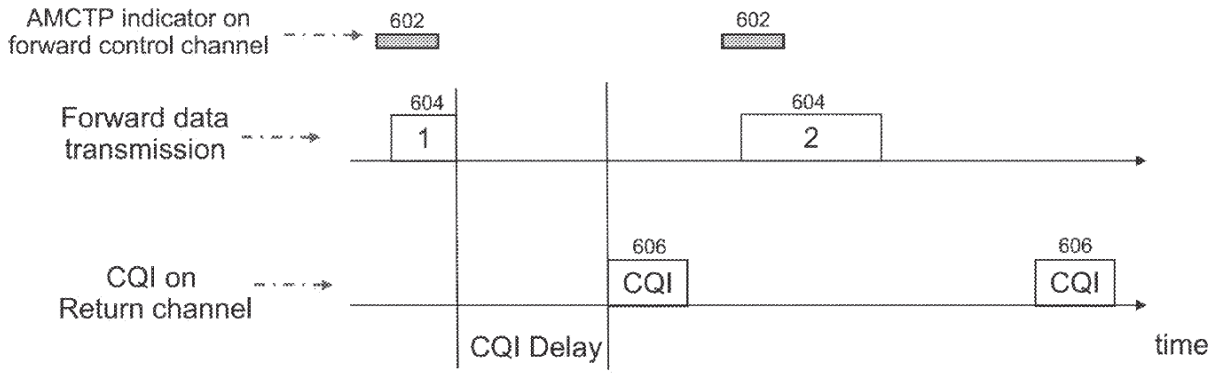

FIG. 6

EX1001, FIG. 6.

211. The 802.16a's transmission of the FCH at the beginning of each downlink frame using a more robust burst profile (i.e., with stronger error protection) is just link the transmission of the AMCTP indicator. EX1006, 183. I note that 802.16a's Figure 40 looks like Figure 6 of the '941 patent:

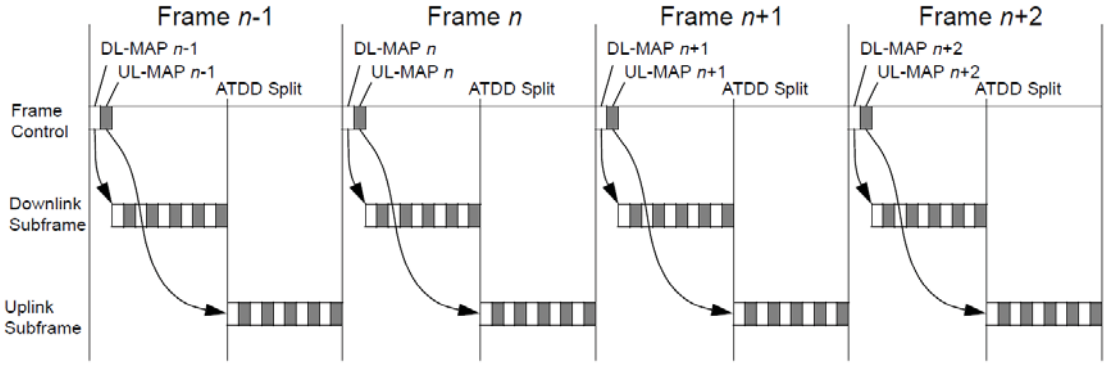

Figure 40—Minimum time relevance of PHY and MAC control information (TDD)

EX1005, FIG. 40

See EX1005, 239 ("The frame control section of the downlink frame (as defined in 8.2.5.1) shall be encoded with a fixed set of parameters known to the SS at initialization in order to ensure that all subscriber stations can read the information. The modulation shall be QPSK, and the data shall be encoded with an outer (46,26) Reed–Solomon code and an inner (24,16) convolutional code."); EX1006, 59 ("The first portion of a downlink (MAC) frame shall bear frame control information destined for all SSs. This control information shall not be encrypted. This control section shall contain a DL-MAP message for the downlink channel followed by one UL-MAP message for each associated uplink channel. In addition the control section may contain DCD and UCD messages following the last UL-MAP message."); EX1005, 97 ("The information in the DL-MAP pertains to the current frame (i.e., the frame in which it was received)."

212. Second, Heath confirms that 802.16a discloses the claimed "control channel." For example, Heath explains that "the base transceiver stations and subscriber units communicate information related to the operation mode over a control channel." EX1007, 8:48-50. And just like 802.16a, Heath explains that a "control channel may be located in the header or the payload portion of each packet, however it is preferably located in the header" and that "a control channel may involve a dedicated transmission frequency a dedicated time slot or some other identified communications channel." *Id*., 8:60-63. As such, a POSITA would have understood 802.16a transmission of the FCH at the beginning of each downlink frame to be "transmitting a control message to a mobile station over a control channel."

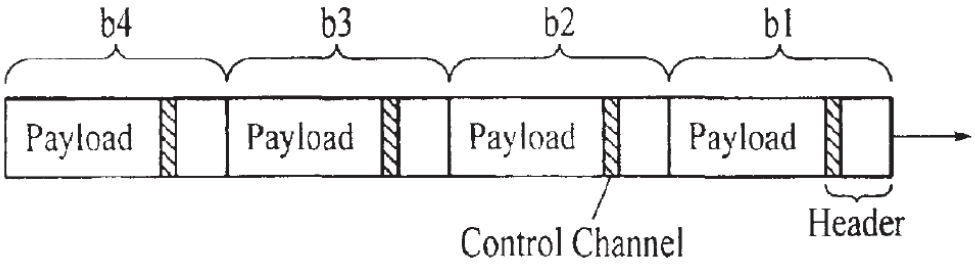

FIG. 3D

EX1007, FIG. 3D

213. Therefore, 802.16a discloses "transmitting a control message to a mobile station over a control channel."

3. Element [1C]: the control message contains transmission parameters allocated to the mobile station for a subsequent transmission of data by the base station over a frequency subchannel to the mobile station in a time slot; and

214. In my opinion, 802.16a discloses [1C].

215. In particular, 802.16a discloses that the FCH ("control message") contains transmission parameters allocated to the SS ("mobile station") for a subsequent transmission of data (e.g., DL burst 3) by the base station over a frequency subchannel (e.g., subchannel 3) to the mobile station in a time slot (e.g., *k+6 to k+8*).

216. As 802.16a explains, the "transmission of the DL is performed on the subchannels of the OFDMA symbol" and that the "number of subchannels needed for the different transmissions (modulation and coding) and their mapping is defined in the DL-MAP message," using "the subchannels in the frequency domain and OFDMA symbols in the time domain." EX1006, 186.

217. In particular, DL-MAP specifies a burst profile (using a DIUC value), OFDM Symbol offset, subchannel offset, number of OFDM symbols and the number of subchannels for a specific DL burst. *Id*., 193 (The "DIUC value is used in the DL-MAP message to specify the Burst Profile to be used for a specific downlink burst."); EX1005, 5 ("burst profile: Set of parameters that describe the uplink or downlink transmission properties associated with an interval usage code. Each profile contains parameters such as modulation type, forward error correction

type, preamble length, guard times, etc.”), 46 (“The DL-MAP message defines the access to the downlink information. …”).

218. Table 116bp illustrates the OFDMA DL-MAP Information Element:

Table 116bp—OFDMA DL-MAP_Information_Element format

Syntax	Size	Notes
DL-MAP_Information_Element() {		
DIUC	4 bits	
if (UIUC == 15) {		
Extended DIUC dependent IE	variable	AAS_DL_IE()
} else {		
OFDM Symbol offset	10 bits	
Subchannel offset	6 bits	
No. OFDM Symbols	10 bits	
No. Subchannels	6 bits	
}		
}		

EX1006, Table 116bp.

EX1006, 188 (“**DIUC** Downlink interval usage code used for the burst. **OFDM Symbol offset** The offset of the OFDM symbol in which the burst starts, measured in OFDM symbols from the allocation start time specified by the Allocation_Start_time field in the DL-MAP. **Subchannel offset** The lowest index OFDM subchannel used for carrying the burst, starting from subchannel 0. **No. OFDM Symbols** The number of OFDM symbols that are used (fully or partially)

to carry the DL PHY Burst. **No. of subchannels** The number [of] OFDMA subchannels with subsequent indexes, used to carry the burst.”);

219. The parameters in DL-Map are used by the BS for a subsequent transmission of data by the base station over a frequency subchannel to the mobile station in a time slot (e.g., DL burst #3 on subchannels 0-6 in the downlink time slot after the DL-Map, *k+6 to k+8*). EX1006, 193 (The “DIUC value is used in the DL-MAP message to specify the Burst Profile to be used for a specific downlink burst.”), 67 (“[A] SS attempts to obtain the downlink parameters by decoding the DL-MAP and DCD messages.”); EX1005, 5 (“burst profile: Set of parameters that describe the uplink or downlink transmission properties associated with an interval usage code. Each profile contains parameters such as modulation type, forward error correction type, preamble length, guard times, etc.”), 24 (“stations check the address in the received messages and retain only those addressed to them”), 46 (“The DL-MAP message defines the access to the downlink information.”), 97 (“The information in the DL-MAP pertains to the current frame (i.e., the frame in which it was received).”), 220 (“Each SS receives and decodes the control information of the downlink and looks for MAC headers indicating data for that SS in the remainder of the downlink subframe.”).

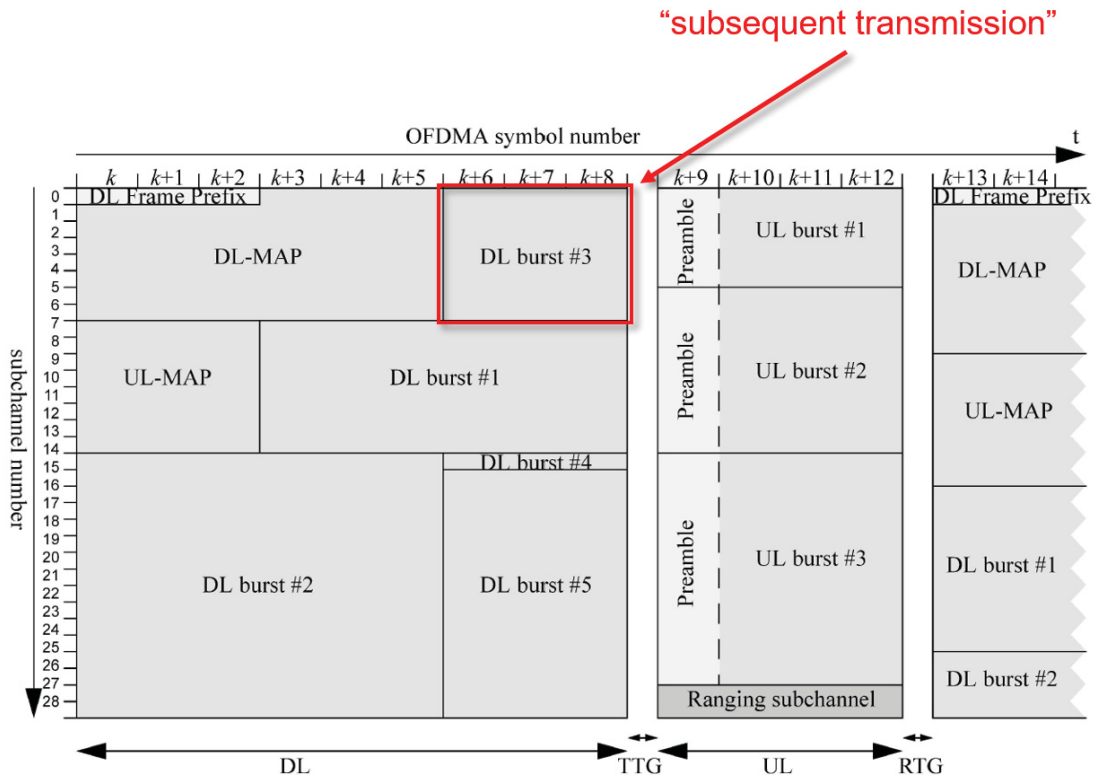

Figure 128av—Time plan - one TDD time frame

EX1006, FIG. 128av (annotated).

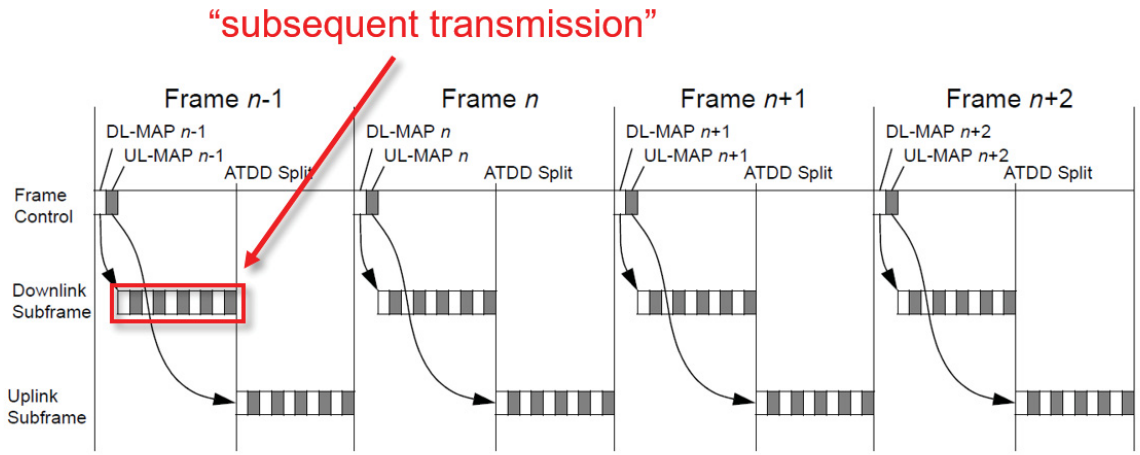

Figure 40—Minimum time relevance of PHY and MAC control information (TDD)

EX1005, FIG. 40 (annotated).

220. Therefore, 802.16a discloses "the control message contains transmission parameters allocated to the mobile station for a subsequent transmission of data by the base station over a frequency subchannel to the mobile station in a time slot."

4. Element [1D]: the mobile station-specific transmission parameters indicate an antenna transmission scheme

221. In my opinion, 802.16a discloses [1D]. In particular, 802.16a discloses that the SS-specific transmission parameters in the FCH indicate an antenna transmission scheme.

222. As I explained above, 802.16a's BS and SS can communicate using different antenna schemes with multiple antennas, including transmit diversity (space time coding (STC)) and adaptive antenna systems (AAS). EX1006, 203-205 (describing STC), 66-68 (describing AAS); *see supra* VIII.B.

223. "Space-Time Coding (STC) (see [B26]) may be used on the downlink to provide 2nd order (Space) transmit diversity" using "two transmit antennas on the BS side." 802.16a-2003, 203 ("8.5.8 Transmit diversity: Space-Time Coding").

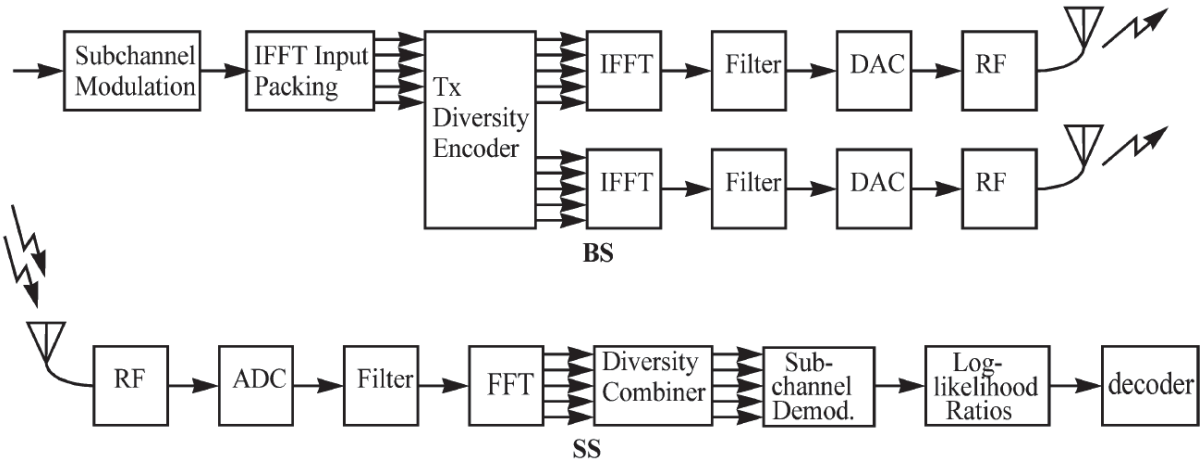

Figure 128bf—Illustration of STC

EX1006, 204.

224. AAS "through the use of more than one antenna element, can improve range and system capacity, by adapting the antenna pattern and concentrating its radiation to each individual subscriber. The spectral efficiency can be increased linearly with the number of antenna elements. This is achieved by steering beams to multiple users simultaneously so as to realize an inter-cell frequency reuse of one and an in-cell reuse factor proportional to the number of antenna elements." EX1006, 66. 802.16a also explains that "[a]n additional benefit is the SNR gain realized by coherently combining multiple signals, and the ability to direct this gain to particular users." *Id*.

225. Table 0a illustrates the STC and AAS options for OFDMA:

Table 0a—Air interface nomenclature

Designation	Applicability	PHY specification	Additional MAC requirements	Options	Duplexing alternative
WirelessMAN-SC	10–66 GHz	8.2			TDD FDD
WirelessMAN-SCa	2–11 GHz licensed bands	8.3		AAS (6.2.7.7) ARQ (6.2.4) STC (8.3.3)	TDD FDD
WirelessMAN-OFDM	2–11 GHz licensed bands	8.4		AAS (6.2.7.7) ARQ (6.2.4) Mesh (6.2.6.7) STC (8.4.7)	TDD FDD
WirelessMAN-OFDMA	2–11 GHz licensed bands	8.5		AAS (6.2.7.7) ARQ (6.2.4) STC (8.5.8)	TDD FDD
WirelessHUMAN	2–11 GHz license-exempt bands	[8.3, 8.4 or 8.5] and 8.6	DFS (6.2.14)	AAS (6.2.7.7) ARQ (6.2.4) Mesh (6.2.6.7) (with 8.4 only) STC (8.3.3/8.4.7/8.5.8)	TDD

EX1006, Table 0a (annotated).

226. 802.16a's SS-specific transmission parameters in the FCH indicate which antenna scheme to use via DL-MAP with the STC_IE() and AAS_ DL_IE() information elements. EX1006, 188.

Table 116bp—OFDMA DL-MAP_Information_Element format

Syntax	Size	Notes
DL-MAP_Information_Element() {		
DIUC	4 bits	
if (UIUC == 15) {		
Extended DIUC dependent IE	variable	AAS_DL_IE()
} else {		
OFDM Symbol offset	10 bits	
Subchannel offset	6 bits	
No. OFDM Symbols	10 bits	
No. Subchannels	6 bits	
}		
}		

EX1006, Table 116bp (annotated).

227. "In the DL-MAP, an STC enabled BS (see 8.5.8) may transmit DIUC=l 5 with the STC IE() to indicate that the subsequent allocations shall be STC encoded." EX1006, 189.

Table 116bs—OFDMA DL STC Information Element

Syntax	Size	Notes
STC_IE() {		
extended DIUC	4 bits	AAS = 0x01
OFDMA symbol offset	10 bits	
}		

EX1006, Table 116bs.

228. "Within a frame, the switch from non-AAS to AAS-enabled traffic is marked by using the extended DIUC = 15 with the AAS_DL_IE() to indicate that the subsequent allocations…shall be for ASS traffic." 802.16a-2003, 189.

Table 116br—OFDMA DL AAS information element

Syntax	Size	Notes
AAS_DL_IE() {		
extended DIUC	4 bits	AAS = 0x02
Permutation	2 bits	0 = distributed-carrier permutation 1 = adjacent-carrier permutation
OFDMA symbol offset	10 bits	
}		

EX1006, Table 116br.

229. Therefore, 802.16a discloses "the mobile station-specific transmission parameters indicate an antenna transmission scheme."

5. Element [1E]: the mobile station-specific transmission parameters indicate … a corresponding subchannel configuration

230. In my opinion, 802.16a discloses [1E]. In particular, 802.16a discloses that the SS-specific transmission parameters indicate a corresponding subchannel configuration.

231. 802.16a explains that the "transmission of the DL is performed on the subchannels of the OFDMA symbol. The number of subchannels needed for the different transmissions (modulation and coding) and their mapping is defined in the

DL-MAP message. The mapping of the subchannels is performed in a two-dimensional grid, involving the subchannels in the frequency domain and OFDMA symbols in the time domain, as explained in 8.5.3.2." EX1006, 186, 180 ("In the OFDMA mode, the active carriers are divided into subsets of carriers, each subset is termed a subchannel. In the DL, a subchannel may be intended for different (groups of) receivers… The carriers forming one subchannel may, but need not be adjacent. The concept is shown in Figure 128as.")

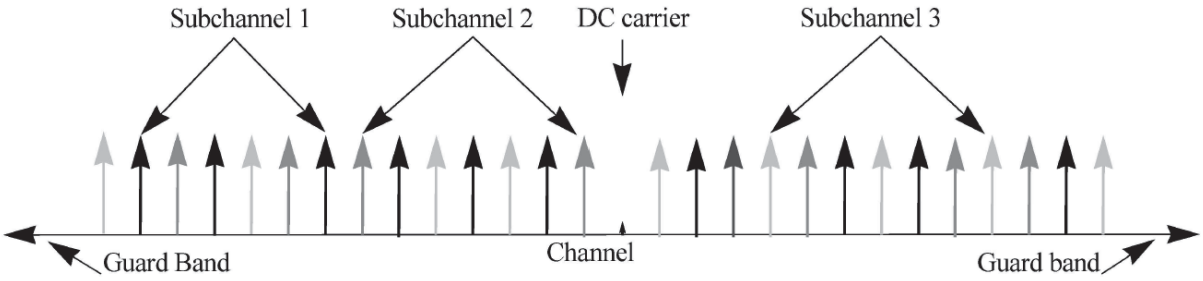

Figure 128as—OFDMA frequency description (3 channel schematic example)

EX1006, FIG. 128as.

232. Table 116bp illustrates the OFDMA DL-MAP Information Element:

Table 116bp—OFDMA DL-MAP_Information_Element format

Syntax	Size	Notes
DL-MAP_Information_Element() {		
DIUC	4 bits	
if (UIUC == 15) {		
Extended DIUC dependent IE	variable	AAS_DL_IE()
} else {		
OFDM Symbol offset	10 bits	
Subchannel offset	6 bits	
No. OFDM Symbols	10 bits	
No. Subchannels	6 bits	
}		
}		

EX1006, Table 116bp (annotated).

EX1006, 188 ("**DIUC** Downlink interval usage code used for the burst. **OFDM Symbol offset** The offset of the OFDM symbol in which the burst starts, measured in OFDM symbols from the allocation start time specified by the Allocation_Start_time field in the DL-MAP. **Subchannel offset** The lowest index OFDM subchannel used for carrying the burst, starting from subchannel 0. **No. OFDM Symbols** The number of OFDM symbols that are used (fully or partially) to carry the DL PHY Burst. **No. of subchannels** The number OFDMA subchannels with subsequent indexes, used to carry the burst.") (emphasis added).

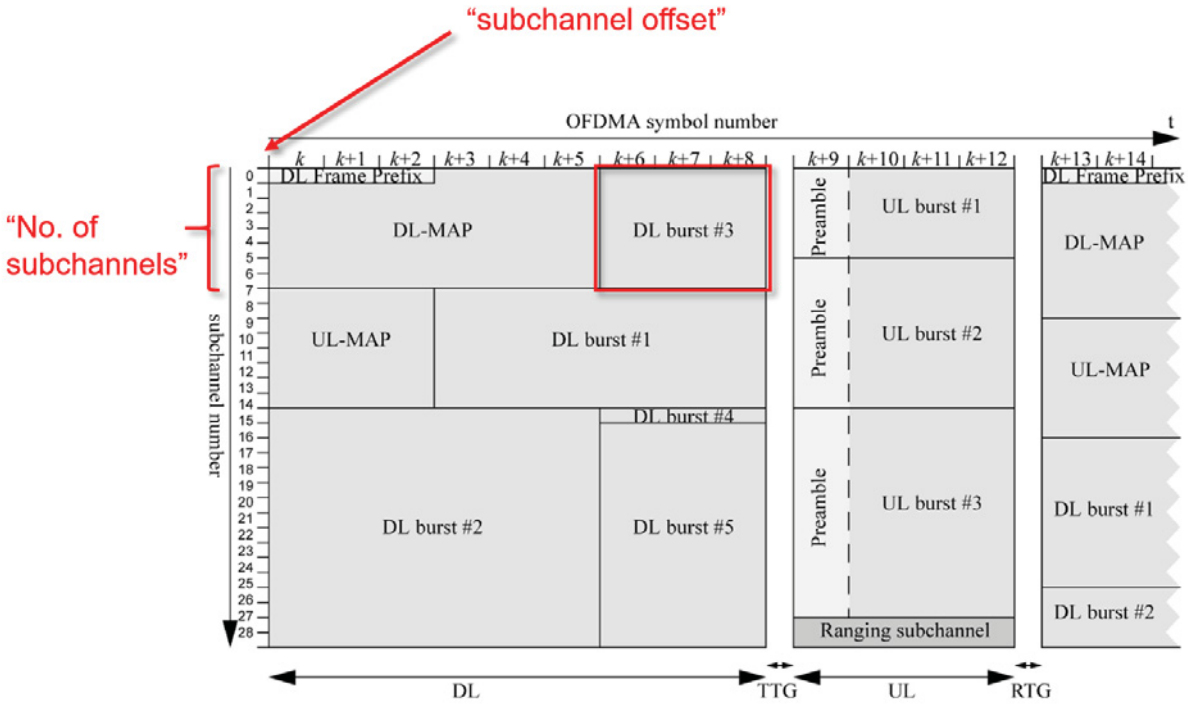

Figure 128av—Time plan - one TDD time frame

EX1006, FIG. 128av (annotated).

233. At least the subchannel offset and no. of subchannels in DL-Map of 802.16a "indicate…a corresponding subchannel configuration." 802.16a therefore discloses "*the mobile station-specific transmission parameters indicate … a corresponding subchannel configuration*."

234. In my opinion, 802.16a also discloses that "the mobile station-specific transmission parameters indicate … a corresponding subchannel configuration" for the reasons I explain below for [1G]. *See infra* VIII.C.7.

6. Element [1F]: the antenna transmission scheme comprising a transmission diversity scheme or a multiple-input multiple-output (MIMO) scheme

235. In my opinion, 802.16a, alone or in combination with Heath, discloses [1F].

236. As I explained above for [1D], 802.16a, alone or in combination with Heath, discloses the "antenna transmission scheme." *See supra* VIII.C.4. In particular, 802.16a's antenna transmission schemes indicated in the FCH include a transmission diversity scheme (STC) and a multiple-input multiple-output (MIMO) scheme (AAS).

237. "Space-Time Coding (STC) (see [B26]) may be used on the downlink to provide 2nd order (Space) **transmit diversity**" using "two transmit antennas on the BS side." EX1006, 203 ("8.5.8 **Transmit diversity**: Space-Time Coding"). STC is thus a "transmission diversity scheme."

238. AAS "through the use of more than one antenna element, can improve range and system capacity, by adapting the antenna pattern and concentrating its radiation to each individual subscriber. The spectral efficiency can be increased linearly with the number of antenna elements. This is achieved by steering beams to multiple users simultaneously so as to realize an inter-cell frequency reuse of one and an in-cell reuse factor proportional to the number of antenna elements." EX1006, 66 (emphasis added). 802.16a also explains that "[a]n additional benefit is the SNR

gain realized by coherently combining multiple signals, and the ability to direct this gain to particular users." *Id*.

239. As I explained above, because AAS uses multiple transmit antennas to steer different beams to multiple users simultaneously so as to increase spectral efficiency, a POSITA would have readily understood 802.16a's AAS to be a "multiple-input multiple-output (MIMO) scheme." *See supra* VIII.B.

240. In particular, a POSITA would have understood 802.16a's AAS to be a multi-user MIMO scheme. *See, e.g.,* EX1008, ¶¶61 ("MIMO (Multiple-Input, Multiple-Output)—the RF link is characterized by multiple transmit antennas and multiple receive antennas"), 65 ("Spatial multiplexing, multi-user (multi-user MIMO mode)—the use of multiple transmit and receive antennas to accommodate communication with multiple terminals concurrently on the same channel.")

241. Accordingly, 802.16a's "antenna transmission scheme" indicated in DL-MAP comprises STC ("a transmission diversity scheme") or AAS ("a multiple-input multiple-output (MIMO) scheme").

242. Should Patent Owner argue that the claimed "multiple-input multiple-output (MIMO) scheme" requires something different from multi-user MIMO scheme taught by 802.16a, I disagree.

243. As an initial matter, I note that '941 patent does not define or describe the claimed "multiple-input multiple-output (MIMO) scheme" in any detail. Instead,

the ’941 patent simply states that “multiple antenna techniques such as multiple-input multiple-output (MIMO) schemes are used to improve transmission throughput in favorable channel conditions.” EX1001, 6:60-65. Based on this description, a POSITA would have readily appreciated that 802.16a’s AAS scheme is a multiple-input multiple-output (MIMO) scheme because it is used to improve transmission throughput in favorable channel conditions.

244. But regardless, Heath also discloses the claimed “multiple-input multiple-output (MIMO) scheme.” For example, Heath describes using “multiple spatially separated antennas at the base transceiver stations and the subscriber units to multiplex transmissions in order to increase the bit rates between the base transceiver stations and the subscriber units.” EX1007, 1:46-51. Heath explains that in one example, the base station “divides the subscriber datastream into one substream that includes packets b1 and b3 and into another substream that includes packets b2 and b4,” which are then transmitted to the subscriber unit 208 using two spatially separate antennas 218. *Id*., 6:50-64. “The signals transmitted from the two base transceiver station antennas 218 are transmitted over the same frequency and are received by the two subscriber unit antennas 220.” *Id.*, 6:64-67.

245. As I noted above, a POSITA would have thus understood that Heath is implementing a specific type of MIMO referred to as single-user MIMO mode. *See* EX1008, ¶64 (“Spatial multiplexing, single-user (single-user MIMO mode)—the

use of both multiple transmit and receive antennas to achieve high data rates for a single terminal by creating multiple parallel transmission channels by exploiting the spatial dimensionality of the communication channel."); *see supra* VIII.B.

246. Figure 2 of Heath illustrates a spatially multiplexed transmission between a base transceiver station and subscriber unit:

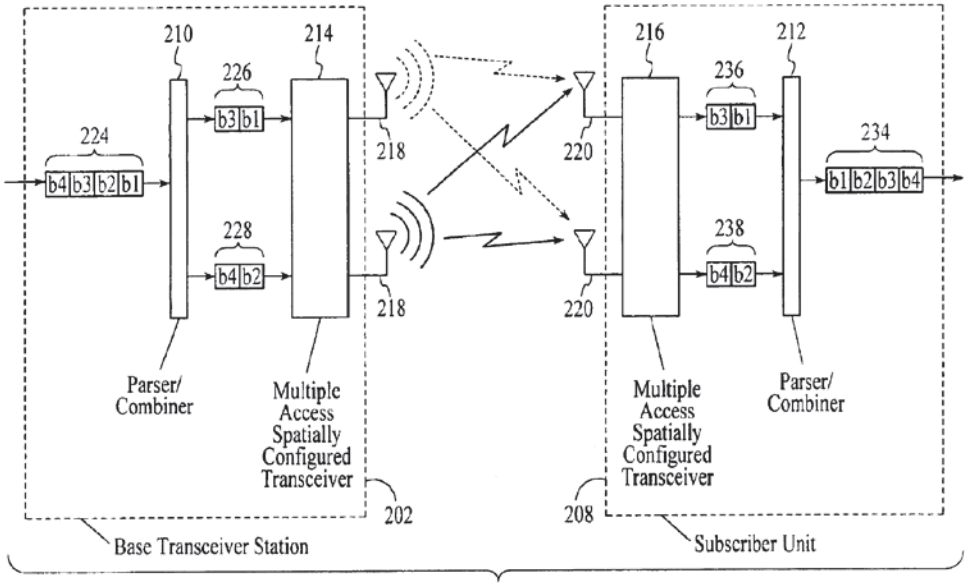

FIG. 2

EX1007, FIG. 2.

247. As I described in section VIII.B, a POSITA would have been motivated to modify to employ Heath's spatial multiplexing scheme, single-user MIMO scheme utilizing the existing transmit antennas of 802.16a's BS, at least for the reasons of increasing the bit rates between the base transceiver stations and the subscriber units. When combined, 802.16a's two transmit antennas would transmit different data streams to the mobile station when transmission conditions were

favorable (e.g., BS is in communication with a single SS and CSI is available to the BS), resulting in "increased bit rates that are enabled by spatial multiplexing." EX1007, 8:18-21; *see supra* VIII.B.

248. Accordingly, 802.16a, alone or in combination with Heath, discloses the FCH indicating "the antenna transmission scheme comprising a transmission diversity scheme or a multiple-input multiple-output (MIMO) scheme."

7. Element [1G]: the corresponding subchannel configuration characterized by distributed subcarriers or localized subcarriers in the frequency domain

249. In my opinion, 802.16a discloses [1G].

250. As I explained above for [1E], 802.16a discloses "the corresponding subchannel configuration." *See supra* VIII.C.5. 802.16a further discloses that the corresponding subchannel configuration is characterized by distributed subcarriers (distributed-carrier permutation) or localized subcarriers (adjacent-carrier permutation) in the frequency domain.

251. As an initial matter, I note that the '941 patent does not define "distributed subcarriers" or "localized subcarriers." Instead, the '941 patent simply states that "[i]n a multi-carrier multi-cell communication system, when all subcarriers in one subchannel are adjacent or close to each other, they are more likely to fall in the coherent bandwidth of a fading channel; thus they can be allocated to users that are either fixed in location or are move slowly. On the other hand, when

subcarriers and/or subchannels that belong to one user are scattered in the frequency domain, it results in higher diversity gains for the fast moving users, and a better interference averaging effect." EX1001, 7:1-9.

252. Likewise, 802.16a explains that the "[sub]carriers forming one subchannel may, but need not be adjacent." EX1006, 180. Figure 128as illustrates distributed subcarriers in the frequency domain:

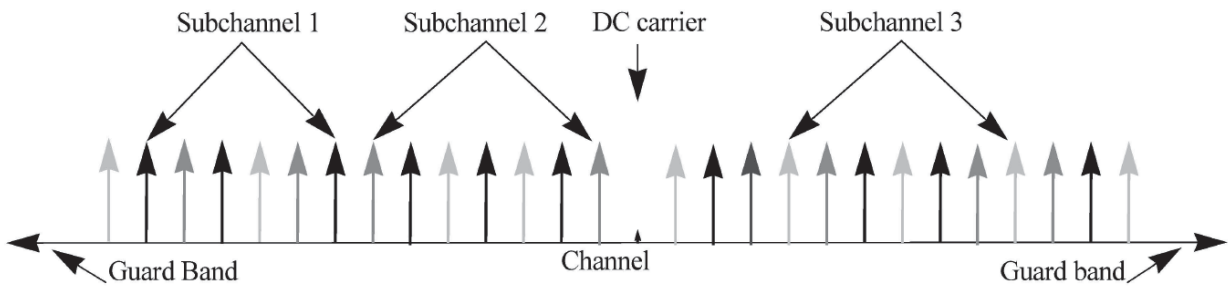

Figure 128as—OFDMA frequency description (3 channel schematic example)

EX1006, FIG. 128as

253. For the "distributed carrier permutation," data carriers are partitioned into groups of contiguous carriers such that "**each subchannel consists of one carrier from each of these groups**," EX1006, 196, according to Equation (69):"

$$carrier(n,\ s) = N_{subchannels} \cdot\ n + \{p_s[n_{mod(N_{subchannels})}] + ID_{cell} \cdot\ ceil[(n+1)/\ N_{subchannels}]\}_{mod(N_{subchannels})} \quad (69)$$

EX1006, 196.

where

$carrier(n,\ s)$ is the carrier index of carrier *n* in subchannel *s*

s is the index number of a subchannel, from the set $[0..N_{(subchannel)s}-1]$

n is the carrier-in-subchannel index from the set $[0..N_{subcarriers}-1]$

$N_{(subchannel)s}$ is the number of subchannels

$p_s[j]$ is the series obtained by rotating $\{PermutationBase_0\}$ cyclically to the left *s* times

ceil[ ] is the function that rounds its argument up to the next integer

ID_{cell} is a positive integer assigned by the MAC to identify this particular BS sector

$X_{mod(k)}$ is the remainder of the quotient X/k (which is at most *k*–1)

and the numerical parameters are given in Table 116ca.

EX1006, 197.

Table 116ca—OFDMA DL carrier allocations

Parameter	Value
Number of dc carriers	1
Number of guard carriers, left	173
Number of guard carriers, right	172
N_{used}, Number of used carriers	1702
Total number of carriers	2048
$N_{varLocPilots}$	142
Number of fixed-location pilots	32
Number of variable-location pilots which coincide with fixed-location pilots	8
Total number of pilots[a]	166
Number of data carriers	1536
$N_{subchannels}$	32
$N_{subcarriers}$	48
Number of data carriers per subchannel	48
BasicFixedLocationPilots	{0,39, 261, 330, 342, 351, 522, 636, 645, 651, 708, 726, 756, 792, 849, 855, 918, 1017, 1143, 1155, 1158, 1185, 1206, 1260, 1407, 1419,1428, 1461, 1530,1545, 1572, 1701}
$\{PermutationBase_0\}$	{3, 18, 2, 8, 16, 10, 11, 15, 26, 22, 6, 9, 27, 20, 25, 1, 29, 7, 21, 5, 28, 31, 23, 17, 4, 24, 0, 13, 12, 19, 14, 30}

[a]Variable Location Pilots which coincide with Fixed-location Pilots are counted only once in this value.

EX1006, Table 116ca.

802.16a provides an example of using Equation (69) in section 8.5.6.2.1. EX1006, 199-200.

254. In that example:

The carriers for subchannel s=1 in cell $ID_{cell} = 2$ are computed.

The relevant parameters characterizing the UL are therefore taken from Table 116cb.

— Number of subchannels: $N_{subchannels} = 32$

— Number of carriers in each subchannel: $N_{subcarriers} = 53$

— Number of data carriers in each subchannel = 48.

— $\{PermutationBase_0\}$ = {3, 18, 2, 8, 16, 10, 11, 15, 26, 22, 6, 9, 27, 20, 25, 1, 29, 7, 21, 5, 28, 31, 23, 17, 4, 24, 0, 13, 12, 19, 14, 30}

EX1006, 199.

Using Equation (69),

1) The basic series of 32 numbers is {3, 18, 2, 8, 16, 10, 11, 15, 26, 22, 6, 9, 27, 20, 25, 1, 29, 7, 21, 5, 28, 31, 23, 17, 4, 24, 0, 13, 12, 19, 14, 30}

2) In order to get 32 different permutation the series is rotated to the left (from no rotation at all up to 31 rotations). Since it is assumed s=1, ($permutationbase_{s=1}$) is: {18, 2, 8, 16, 10, 11, 15, 26, 22, 6, 9, 27, 20, 25, 1, 29, 7, 21, 5, 28, 31, 23, 17, 4, 24, 0, 13, 12, 19, 14, 30, 3}

3) Repeat the permuted series 2 times and take the first 53 numbers only: {18, 2, 8, 16, 10, 11, 15, 26, 22, 6, 9, 27, 20, 25, 1, 29, 7, 21, 5, 28, 31, 23, 17, 4, 24, 0, 13, 12, 19, 14, 30, 3, 18, 2, 8, 16, 10, 11, 15, 26, 22, 6, 9, 27, 20, 25, 1, 29, 7, 21, 5, 28, 31, 23, 17, 4, 24, 0, 13, 12, 19, 14, 30, 3}.

4) The concatenation depends on the ID_{cell} (which characterizes the working cell and can range from 0 to 31). It is assumed s=1 and $ID_{cell} = 2$, the last term in the equation becomes

$\{p_s[n_{mod(32)}] + 2 \cdot ceil[(n+1)/32]\}_{mod(32)}$ with $n = 0, 1, \ldots, 52$

= {20, 4, 10, 18, 12, 13, 17, 28, 24, 8, 11, 29, 22, 27, 3, 31, 9, 23, 7, 30, 1, 25, 19, 6, 26, 2, 15, 14, 21, 16, 0, 5, 22, 6, 12, 20, 14, 15, 19, 30, 26, 10, 13, 31, 24, 29, 5, 1, 11, 25, 9, 0, 3}

5) Finally adding in the first term, the set of carriers is found: *carrier(n,1)* = {20, 36, 74, 114, 140, 173, 209, 252, 280, 296, 331, 381, 406, 443, 451, 511, 521, 567, 583, 638, 641, 697, 723, 742, 794, 802, 847, 878, 917, 944, 960, 997, 1046, 1062, 1100, 1140, 1166, 1199, 1235, 1278, 1306, 1322, 1357, 1407, 1432, 1469, 1477, 1505, 1547, 1593, 1609, 1632, 1667}.

EX1006, 200.

255. As you can see in this example, subchannel *s*=1 consists of distributed subcarriers *n* in the frequency domain:

> 5) Finally adding in the first term, the set of carriers is found: *carrier(n,1)* = {20, 36, 74, 114, 140, 173, 209, 252, 280, 296, 331, 381, 406, 443, 451, 511, 521, 567, 583, 638, 641, 697, 723, 742, 794, 802, 847, 878, 917, 944, 960, 997, 1046, 1062, 1100, 1140, 1166, 1199, 1235, 1278, 1306, 1322, 1357, 1407, 1432, 1469, 1477, 1505, 1547, 1593, 1609, 1632, 1667}.

EX1006, 200.

256. I note that this is consistent with the '941 patent, which refers to subcarriers being "**scattered in the frequency domain**." EX1001, 7:5-9.

257. For the "adjacent carrier permutation," "symbol data within a subchannel is assigned to **adjacent carriers** and the pilot and data carriers are assigned fixed positions in the frequency domain within an OFDM symbol." EX1006, 201. Table 116cc illustrates these subcarrier allocations:

Table 116cc—OFDMA AAS carrier allocations

Parameter	Value
Number of dc carriers	1
Number of guard carriers, left	176
Number of guard carriers, right	175
N_{used}, Number of used carriers	1696
Total number of carriers	2048
$N_{varLocPilots}$	0
Number of fixed-location pilots	160
Number of variable-location pilots which coincide with fixed-location pilots	0
Total number of pilots (*)	160
Number of data carriers	1536
$N_{subchannels}$	32
$N_{subcarriers}$	48
Number of data carriers per subchannel	48
BasicFixedLocationPilots	{5,16,27,38,49}within each subchannel

EX1006, Table 116cc.

258. I note that this is consistent with the '941 patent, which refers to "subcarriers in one subchannel" being "adjacent or close to each other." EX1001, 7:1-5.

259. 802.16a's BS may change from the "distributed carrier permutation" to the "adjacent carrier permutation" and indicate the switch to the mobile station in the AAS_DL_IE() in DL-MAP. EX1006, 188-189 ("Within a frame, the switch from non-AAS to AAS-enabled traffic is marked by using the extended DIUC =15 with the AAS_ DL_IE() to indicate that the subsequent allocations, until the start of the

first UL-MAP allocation using TDD, and until the end of the frame using FDD, shall be for AAS traffic."), 200-201 ("With the adjacent carrier permutation, symbol data within a subchannel is assigned to adjacent carriers and the pilot and data carriers are assigned fixed positions in the frequency domain within an OFDM symbol. This permutation is the same for both UL and DL. Within each frame, the BS shall indicate the switch to the optional permutation in the AAS_DL_IE() and AAS_UL_IE() when switching to AAS traffic. (see 8.5.5.2 and 8.5.5.3).").

260. "After this change, the BS shall only transmit / receive AAS-enabled traffic using the adjacent carrier permutation until the end of the frame." *Id*., 200 ("A BS using the AAS option may change from the 'distributed carrier permutation' described in 8.5.6.1 and 8.5.6.2 to the 'adjacent carrier permutation' 'when changing from non-AAS to AAS-enabled traffic to support AAS adjacent carrier user traffic in the cell. After this change, the BS shall only transmit / receive AAS-enabled traffic using the adjacent carrier permutation until the end of the frame. The BS shall always return to the distributed carrier permutation for the broadcast (non-AAS) traffic.").

261. Table 116br illustrates AAS_DL_IE() indicating the subchannel configuration:

Table 116br—OFDMA DL AAS information element

Syntax	Size	Notes
AAS_DL_IE() {		
extended DIUC	4 bits	AAS = 0x02
Permutation	2 bits	0 = distributed-carrier permutation 1 = adjacent-carrier permutation
OFDMA symbol offset	10 bits	
}		

"distributed subcarriers"

"localized subcarriers"

EX1006, Table 116br.

262. A POSITA would have thus recognized that 802.16a discloses a mobile station-specific transmission parameter capable of indicating, as alternatives, both distributed subcarriers and localized subcarriers in the frequency domain as subchannel configurations.

263. Therefore, 802.16a discloses "the corresponding subchannel configuration characterized by distributed subcarriers or localized subcarriers in the frequency domain."

8. Element [1H]: transmitting a data packet to the mobile station over the frequency subchannel in accordance with the mobile station-specific transmission parameters.

264. In my opinion, 802.16a, alone or in combination with Heath, discloses [1H]. In particular, 802.16a, alone or in combination with Heath, discloses transmitting a DL burst (data packet) to the mobile station over the frequency subchannel in accordance with the mobile station-specific transmission parameters (e.g., subchannel offset, no. of subchannels) specified in DL-MAP. *See supra* VIII.C.3; *see also* EX1005, 15-24 (describing data packet format)

Table 116bp—OFDMA DL-MAP_Information_Element format

Syntax	Size	Notes
DL-MAP_Information_Element() {		
DIUC	4 bits	
if (UIUC == 15) {		
Extended DIUC dependent IE	variable	AAS_DL_IE()
} else {		
OFDM Symbol offset	10 bits	
Subchannel offset	6 bits	
No. OFDM Symbols	10 bits	
No. Subchannels	6 bits	
}		
}		

EX1006, Table 116bp.

EX1006, 188 ("**DIUC** Downlink interval usage code used for the burst. **OFDM Symbol offset** The offset of the OFDM symbol in which the burst starts, measured in OFDM symbols from the allocation start time specified by the Allocation_Start_time field in the DL-MAP. **Subchannel offset** The lowest index OFDM subchannel used for carrying the burst, starting from subchannel 0. **No. OFDM Symbols** The number of OFDM symbols that are used (fully or partially) to carry the DL PHY Burst. **No. of subchannels** The number OFDMA subchannels with subsequent indexes, used to carry the burst."). In other words, the BS will transmit a data packet to the mobile station over the subchannel specified in DL-Map.

265. Moreover, 802.16a explains that the BS shall transmit traffic/a data packet "using the adjacent carrier permutation until the end of the frame" after informing the mobile station of the switch in DL-MAP. EX1006, 200 ("A BS using the AAS option may change from the 'distributed carrier permutation' described in 8.5.6.1 and 8.5.6.2 to the 'adjacent carrier permutation' 'when changing from non-AAS to AAS-enabled traffic to support AAS adjacent carrier user traffic in the cell. After this change, the BS shall only transmit / receive AAS-enabled traffic using the adjacent carrier permutation until the end of the frame. The BS shall always return to the distributed carrier permutation for the broadcast (non-AAS) traffic.").

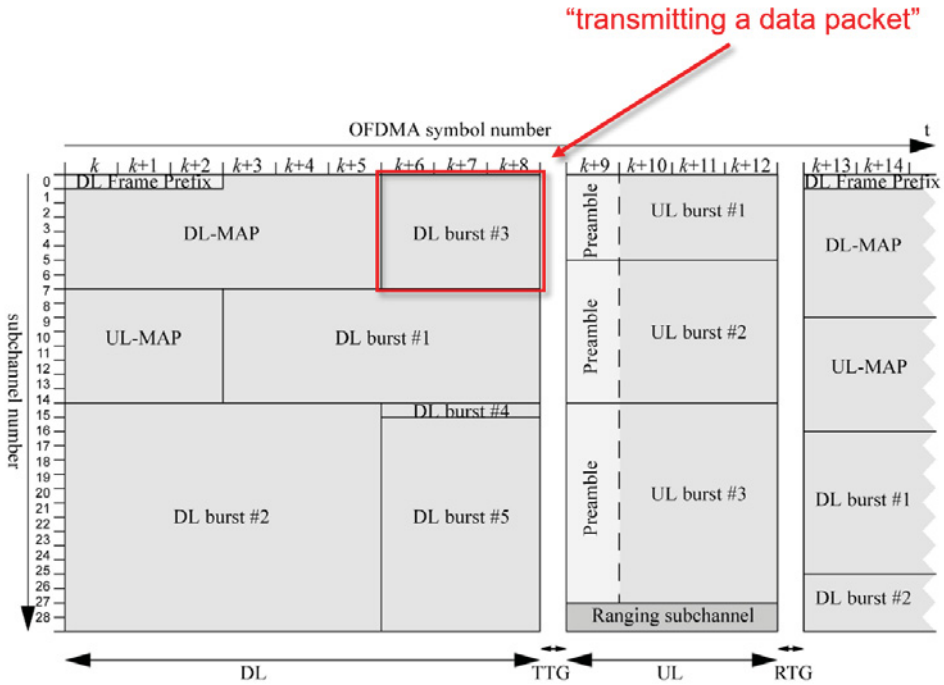

Figure 128av—Time plan - one TDD time frame

EX1006, FIG. 128av (annotated).

266. 802.16a, as modified in view of Heath, would have also taught "transmitting a data packet to the mobile station over the frequency subchannel in accordance with the mobile station-specific transmission parameters" using Heath's spatial multiplexing scheme as described above. *See supra* VIII.B.

267. Therefore, 802.16a, alone or in combination with Heath, discloses "transmitting a data packet to the mobile station over the frequency subchannel in accordance with the mobile station-specific transmission parameters."

D. 802.16a in view of Heath renders obvious claim 6

268. Claim 6 is an independent claim that recites similar limitations to method claim 6 in the form of an apparatus claims—a "base station serving a plurality of mobile stations."

269. For purposes of my analysis, and ease of review, I have separated claim 1 into component parts, which I identify in brackets for reference:

> [6A] A base station serving a plurality of mobile stations in an Orthogonal Frequency Division Multiplexing (OFDM) communication system, the communication system utilizing a transmission structure with time slots in the time domain and frequency subchannels in the frequency domain, the base station comprising a transmitter configured to:
>
> [6B] transmit a control message to a mobile station over a control channel, wherein:

[6C] the control message contains transmission parameters allocated to the mobile station for a subsequent transmission of data by the base station over a frequency subchannel to the mobile station in a time slot; and

[6D] the mobile station-specific transmission parameters indicate an antenna transmission scheme and

[6E] *the mobile station-specific transmission parameters indicate* … a corresponding subchannel configuration,

[6F] the antenna transmission scheme comprising a transmission diversity scheme or a multiple-input multiple-output (MIMO) scheme and

[6G] the corresponding subchannel configuration characterized by distributed subcarriers or localized subcarriers in the frequency domain; and

[6H] transmitting a data packet to the mobile station over the frequency subchannel in accordance with the mobile station-specific transmission parameters.

270. For similar reasons as I discussed with respect to claim 1, and below, it is my opinion that each and every element of independent claim 6 was well-known in the art prior to the ’941 patent, and that claim 6 would have been obvious over the art.

1. Claim 6 Preamble (Element [6A]): A base station serving a plurality of mobile stations in an Orthogonal Frequency Division Multiplexing (OFDM) communication system, the communication system utilizing a transmission structure with time slots in the time domain and frequency subchannels in the frequency domain, the base station comprising a transmitter configured to:

271. For similar reasons I explained above with respect to [1A], it is my opinion that 802.16a discloses [6A]. *See supra*, VIII.C.1.

2. Element [6B]: transmit a control message to a mobile station over a control channel, wherein:

272. For similar reasons I explained above with respect to [1B], it is my opinion that 802.16a discloses [6B]. *See supra*, VIII.C.2.

3. Element [6C]: the control message contains transmission parameters allocated to the mobile station for a subsequent transmission of data by the base station over a frequency subchannel to the mobile station in a time slot; and

273. For similar reasons I explained above with respect to [1C], it is my opinion that 802.16a discloses [6C]. *See supra*, VIII.C.3.

4. Element [6D]: the mobile station-specific transmission parameters indicate an antenna transmission scheme

274. For similar reasons I explained above with respect to [1D], it is my opinion that 802.16a discloses [6D]. *See supra*, VIII.C.4.

5. Element [6E]: the mobile station-specific transmission parameters indicate … a corresponding subchannel configuration

275. For similar reasons I explained above with respect to [1E], it is my opinion that 802.16a discloses [6E]. *See supra*, VIII.C.5.

6. Element [6F]: the antenna transmission scheme comprising a transmission diversity scheme or a multiple-input multiple-output (MIMO) scheme

276. For similar reasons I explained above with respect to [1F], it is my opinion that 802.16a, alone or in combination with Heath, discloses [6E]. *See supra*, VIII.C.6.

7. Element [6G]: the corresponding subchannel configuration characterized by distributed subcarriers or localized subcarriers in the frequency domain

277. For similar reasons I explained above with respect to [1G], it is my opinion that 802.16a discloses [6G]. *See supra*, VIII.C.7.

8. Element [6H]: transmitting a data packet to the mobile station over the frequency subchannel in accordance with the mobile station-specific transmission parameters.

278. For similar reasons I explained above with respect to [1H], it is my opinion that 802.16a, alone or in combination with Heath, discloses [6H]. *See supra*, VIII.C.8.

E. 802.16a in view of Heath renders obvious claim 8

279. Claim 8 is an independent claim that recites similar limitations to method claim 1 in the form of a method from the prospective of a "mobile station served by a base station."

280. For purposes of my analysis, and ease of review, I have separated claim 8 into component parts, which I identify in brackets for reference:

[8A] A link adaptation method by a mobile station served by a serving base station in an Orthogonal Frequency Division Multiplexing (OFDM) communication system, the communication system utilizing a transmission structure with time slots in the time domain and frequency subchannels in the frequency domain, the method comprising:

[8B] receiving a control message from the serving base station over a control channel, wherein

[8C] the control message contains transmission parameters specific to the mobile station for a subsequent transmission by the serving base station over a frequency subchannel to the mobile station in a time slot; and

[8D] the mobile station-specific transmission parameters indicate an antenna transmission scheme and

[8E] *the mobile station-specific transmission parameters indicate* … a corresponding subchannel configuration,

[8F] the antenna transmission scheme comprising a transmission diversity scheme or a multiple-input multiple-output (MIMO) scheme and

[8G] the corresponding subchannel configuration characterized by distributed subcarriers or localized subcarriers in the frequency domain; and

[8H] receiving a data packet transmitted by the serving base station using the mobile station-specific transmission parameters over the frequency subchannel.

281. For similar reasons as I discussed with respect to claims 1 and 6, and below, it is my opinion that each and every element of independent claim 8 was well-known in the art prior to the ’941 patent, and that claim 8 would have been obvious over the art.

1. Claim 8 Preamble (Element [8A]): A link adaptation method by a mobile station served by a serving base station in an Orthogonal Frequency Division Multiplexing (OFDM) communication system, the communication system utilizing a transmission structure with time slots in the time domain and frequency subchannels in the frequency domain, the method comprising:

282. For similar reasons I explained above with respect to [1A], it is my opinion that 802.16a discloses [8A]. *See supra*, VIII.C.1.

283. In particular, 802.16a discloses a link adaption method in an OFDM communication system having at least one mobile station (SS) served by a base station (BS). *See generally* EX1006, 179-226 (Chapter 8.5).

2. Element [8B]: receiving a control message from the serving base station over a control channel, wherein:

284. For similar reasons I explained above with respect to [1B], it is my opinion that 802.16a discloses [8B]. *See supra*, VIII.C.2.

285. In particular, 802.16a discloses the SS receiving the FCH including DL-Map from the serving base station over a control channel. *See* EX1006, 184.

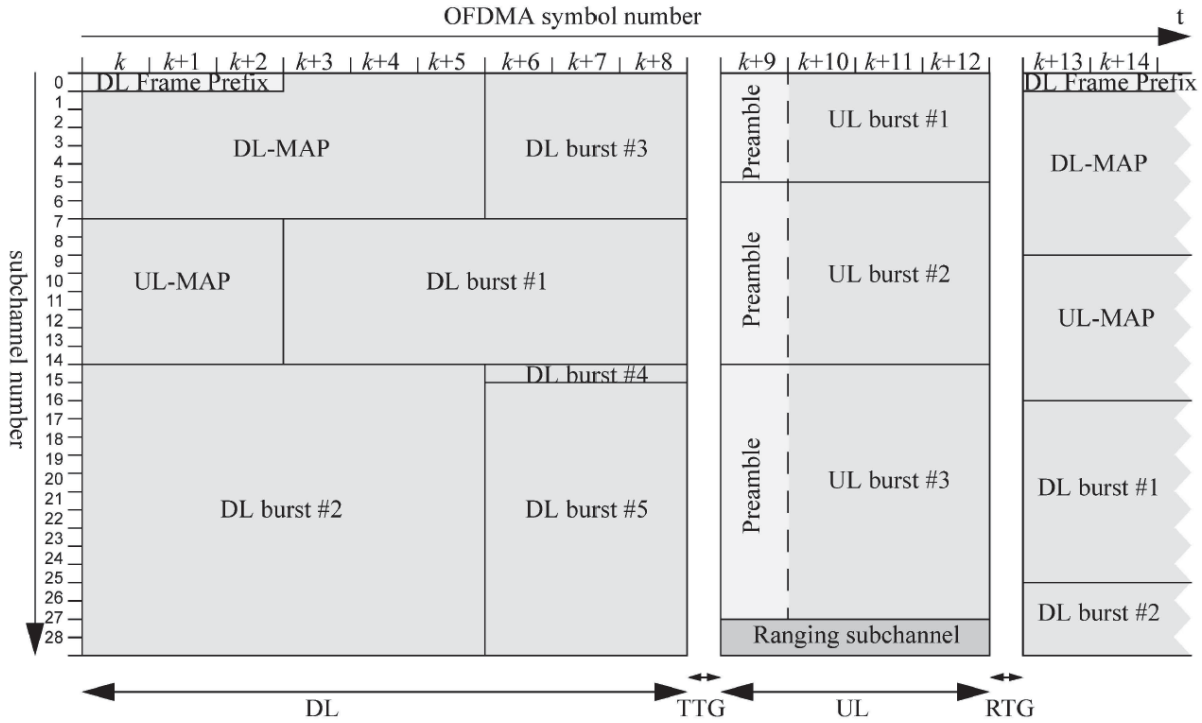

Figure 128av—Time plan - one TDD time frame

EX1006, FIG. 128av.

EX1005, 24 ("stations check the address in the received messages and retain only those addressed to them"), 46 ("The DL-MAP message defines the access to the downlink information."), 97 ("The information in the DL-MAP pertains to the current frame (i.e., the frame in which it was received)."), 220 ("Each SS receives

and decodes the control information of the downlink and looks for MAC headers indicating data for that SS in the remainder of the downlink subframe."); EX1006, 67 ("[A] SS attempts to obtain the downlink parameters by decoding the DL-MAP and DCD messages."), 183 (describing "transmission of a FCH [frame control header], which is transmitted in the most robust burst profile of the system followed by transmission using burst profiles as defined in the FCH").

3. Element [8C]: the control message contains transmission parameters specific to the mobile station for a subsequent transmission by the serving base station over a frequency subchannel to the mobile station in a time slot; and

286. For similar reasons I explained above with respect to [1C], it is my opinion that 802.16a discloses [8C]. *See supra*, VIII.C.3.

4. Element [8D]: the mobile station-specific transmission parameters indicate an antenna transmission scheme

287. For similar reasons I explained above with respect to [1D], it is my opinion that 802.16a discloses [8D]. *See supra*, VIII.C.4.

5. Element [8E]: the mobile station-specific transmission parameters indicate … a corresponding subchannel configuration

288. For similar reasons I explained above with respect to [1E], it is my opinion that 802.16a discloses [8E]. *See supra*, VIII.C.5.

6. Element [8F]: the antenna transmission scheme comprising a transmission diversity scheme or a multiple-input multiple-output (MIMO) scheme

289. For similar reasons I explained above with respect to [1F], it is my opinion that 802.16a, alone or in combination with Heath, discloses [8F]. *See supra*, VIII.C.6.

7. Element [8G]: the corresponding subchannel configuration characterized by distributed subcarriers or localized subcarriers in the frequency domain

290. For similar reasons I explained above with respect to [1G], it is my opinion that 802.16a, discloses [8G]. *See supra*, VIII.C.7.

8. Element [8H]: receiving a data packet transmitted by the serving base station using the mobile station-specific transmission parameters over the frequency subchannel.

291. For similar reasons I explained above with respect to [1H], it is my opinion that 802.16a, alone or in combination with Heath, discloses [8H]. *See supra*, VIII.C.8.

F. 802.16a in view of Heath renders obvious claim 13

292. Claim 13 is an independent claim that recites similar limitations to method claims 1 and 8 in the form of an apparatus claims—a "mobile station served by a base station."

293. For purposes of my analysis, and ease of review, I have separated claim 1 into component parts, which I identify in brackets for reference:

[13A] A mobile station served by a serving base station in an Orthogonal Frequency Division Multiplexing (OFDM) communication system, the communication system utilizing a transmission structure with time slots in the time domain and frequency subchannels in the frequency domain, the mobile station comprising a receiver configured to:

[13B] receive a control message from the serving base station over a control channel, wherein

[13C] the control message contains transmission parameters specific to the mobile station for a subsequent transmission by the serving base station over a frequency subchannel to the mobile station in a time slot; and

[13D] the mobile station-specific transmission parameters indicate an antenna transmission scheme and

[13E] *the mobile station-specific transmission parameters indicate* … a corresponding subchannel configuration,

[13F] the antenna transmission scheme comprising a transmission diversity scheme or a multiple-input multiple-output (MIMO) scheme and

[13G] the corresponding subchannel configuration characterized by distributed subcarriers or localized subcarriers in the frequency domain; and

[13H] receive a data packet transmitted by the serving base station using the mobile station-specific transmission parameters over the frequency subchannel.

294. For similar reasons as I discussed with respect to claims 1 and 8, and below, it is my opinion that each and every element of independent claim 13 was well-known in the art prior to the '941 patent, and that claim 13 would have been obvious over the art.

1. Claim 13 Preamble (Element [13A]): A mobile station served by a serving base station in an Orthogonal Frequency Division Multiplexing (OFDM) communication system, the communication system utilizing a transmission structure with time slots in the time domain and frequency subchannels in the frequency domain, the mobile station comprising a receiver configured to:

295. For similar reasons I explained above with respect to [1A] and [8A], it is my opinion that 802.16a discloses [13A]. *See supra*, VIII.C.1, VIII.D.1.

2. Element [13B]: receive a control message from the serving base station over a control channel, wherein:

296. For similar reasons I explained above with respect to [1B] and [8B], it is my opinion that 802.16a discloses [13D]. *See supra*, VIII.C.2, VIII.D.2.

3. Element [13C]: the control message contains transmission parameters specific to the mobile station for a subsequent transmission by the serving base station over a frequency subchannel to the mobile station in a time slot; and

297. For similar reasons I explained above with respect to [1C] and [8C], it is my opinion that 802.16a discloses [13D]. *See supra*, VIII.C.3, VIII.D.3.

4. Element [13D]: the mobile station-specific transmission parameters indicate an antenna transmission scheme

298. For similar reasons I explained above with respect to [1D] and [8D], it is my opinion that 802.16a discloses [13D]. *See supra*, VIII.C.4, VIII.D.4.

5. Element [13E]: the mobile station-specific transmission parameters indicate … a corresponding subchannel configuration

299. For similar reasons I explained above with respect to [1E] and [8E], it is my opinion that 802.16a discloses [13E]. *See supra*, VIII.C.5, VIII.D.5.

6. Element [13F]: the antenna transmission scheme comprising a transmission diversity scheme or a multiple-input multiple-output (MIMO) scheme

300. For similar reasons I explained above with respect to [1F] and [8F], it is my opinion that 802.16a, alone or in combination with Heath, discloses [13F]. *See supra*, VIII.C.6, VIII.D.6.

7. Element [13G]: the corresponding subchannel configuration characterized by distributed subcarriers or localized subcarriers in the frequency domain

301. For similar reasons I explained above with respect to [1G] and [8G], it is my opinion that 802.16a discloses [13G]. *See supra*, VIII.C.7, VIII.D.7.

8. Element [13H]: receive a data packet transmitted by the serving base station using the mobile station-specific transmission parameters over the frequency subchannel.

302. For similar reasons I explained above with respect to [1H] and [8H], it is my opinion that 802.16a, alone or in combination with Heath, discloses [13H]. *See supra*, VIII.C.8, VIII.D.8.

G. 802.16a in view of Heath renders obvious claim 2

303. Claim 2 depends from claim 1, and recites "wherein the mobile station-specific transmission parameters further indicate a training pilot pattern." In my opinion, 802.16a discloses claim 2.

304. 802.16a explains that for both the uplink and downlink, carriers are allocated to pilot carriers and data carriers. EX1006, 194. For the distributed carrier permutation, carriers are either fixed-location pilots, variable location pilots, or data. The carrier indices of the fixed-location pilots never change and these indices are the members of the set BasicFixedLocationPilots (below). The variable-location pilots shift their location every symbol repeating every 4 symbols, according to the formula: $varLocPilot_k = 3L+12P_k$. *Id.* This allocation is illustrated in Figure 128ba:

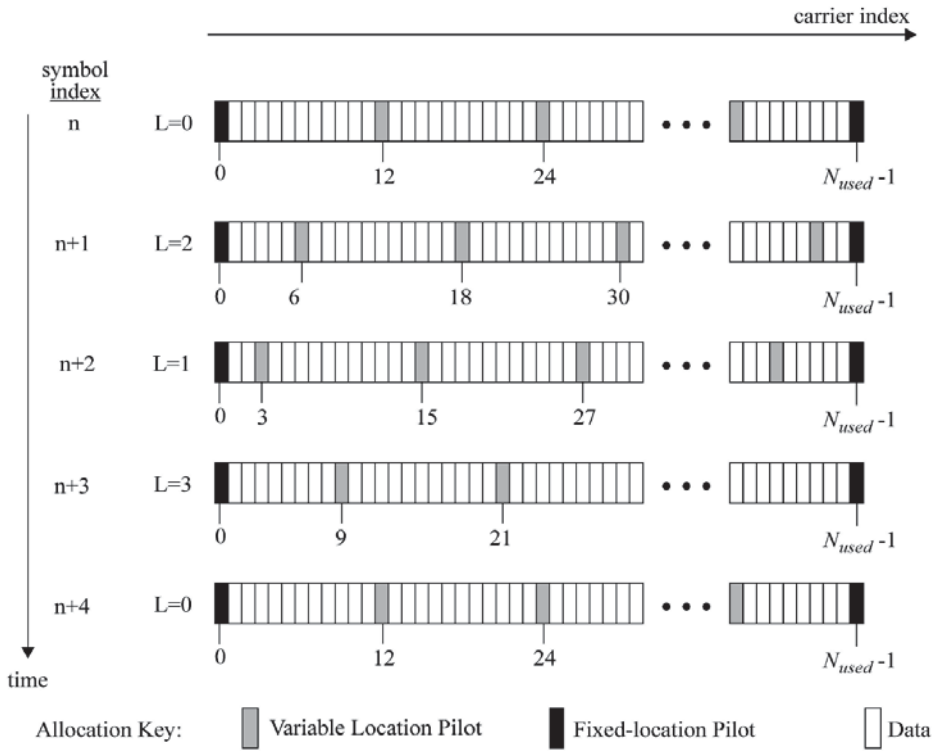

Figure 128ba—Carrier Allocations in the OFDMA DL

EX1006, FIG. 128ba.

305. Table 116ca illustrates the specific fixed pilot pattern for the distributed carrier permutation:

Table 116ca—OFDMA DL carrier allocations

Parameter	Value
Number of dc carriers	1
Number of guard carriers, left	173
Number of guard carriers, right	172
N_{used}, Number of used carriers	1702
Total number of carriers	2048
$N_{varLocPilots}$	142
Number of fixed-location pilots	32
Number of variable-location pilots which coincide with fixed-location pilots	8
Total number of pilots[a]	166
Number of data carriers	1536
$N_{subchannels}$	32
$N_{subcarriers}$	48
Number of data carriers per subchannel	48
BasicFixedLocationPilots	{0,39, 261, 330, 342, 351, 522, 636, 645, 651, 708, 726, 756, 792, 849, 855, 918, 1017, 1143, 1155, 1158, 1185, 1206, 1260, 1407, 1419,1428, 1461, 1530,1545, 1572, 1701}
$\{PermutationBase_0\}$	{3, 18, 2, 8, 16, 10, 11, 15, 26, 22, 6, 9, 27, 20, 25, 1, 29, 7, 21, 5, 28, 31, 23, 17, 4, 24, 0, 13, 12, 19, 14, 30}

[a]Variable Location Pilots which coincide with Fixed-location Pilots are counted only once in this value.

EX1006, Table 116ca (annotated).

306. With the adjacent carrier permutation used for 802.16a's AAS traffic, the training pilot pattern is different—the pilot carriers are only assigned fixed positions in the frequency domain. EX1006, 200-201. The adjacent carrier permutation does not utilize variable position pilot carriers.

307. Table 116cc illustrates the specific fixed pilot pattern for the adjacent carrier permutation:

Table 116cc—OFDMA AAS carrier allocations

Parameter	Value
Number of dc carriers	1
Number of guard carriers, left	176
Number of guard carriers, right	175
N_{used}, Number of used carriers	1696
Total number of carriers	2048
$N_{varLocPilots}$	0
Number of fixed-location pilots	160
Number of variable-location pilots which coincide with fixed-location pilots	0
Total number of pilots (*)	160
Number of data carriers	1536
$N_{subchannels}$	32
$N_{subcarriers}$	48
Number of data carriers per subchannel	48
BasicFixedLocationPilots	{5,16,27,38,49}within each subchannel

EX1006, Table 116cc (annotated).

308. As I noted above, 802.16a's SS-specific transmission parameters indicate whether to use AAS or STC. *See supra* VIII.C.7. As such, 802.16a's SS-specific transmission parameters also indicate the appropriate training pilot pattern specified in BasicFixedLocationPilots.

309. Therefore, 802.16a discloses "wherein the mobile station-specific transmission parameters further indicate a training pilot pattern."

H. 802.16a in view of Heath renders obvious claim 3

310. Claim 3 depends from claim 1, and recites "wherein the mobile station-specific transmission parameters further indicate power control information." In my opinion, 802.16a discloses claim 3.

311. In particular, 802.16a discloses that the SS-specific parameters indicate power control information in two ways.

312. First, 802.16a explains that the DCD message in the FCH indicates the BS transmit power. EX1005, 224; EX1006, 184 (describing that the FCH that the "contains the DL-MAP message and may additionally include the UL-MAP, DCD or UCD messages.") This BS transmit power is used by the SS to validate radio link conditions. *Id.*

Table 124—DCD channel encodings

Name	Type (1 byte)	Length	Value (variable-length)
Downlink_Burst_Profile	1		May appear more than once; described below. The length is the number of bytes in the overall object, including embedded TLV items.
BS Transmit Power (average)	2	1	Signed in units of 1 dBm.
Burst FDD/TDD frame duration	4	4	The number of PSs contained in a Burst FDD or TDD frame. Required only for framed downlinks
PHY Type	5	1	The PHY Type to be used.
power adjustment rule	9	1	0=Preserve Peak Power 1=Preserve Mean Power Describes the power adjustment rule when performing a transition from one burst profile to another.

EX1006, Table 124 (annotated).

313. Second, 802.16a discloses that the BS may transmit a Power Control Information Element (Power_Control_IE) in the UL-Map in the FCH to instruct the SS to change its transmission power. EX1006, 184, 190, 192-193, 219, 256.

Table 116bw—OFDMA Power Control Information Element

Syntax	Size	Notes
Power_Control_IE() {		
extended UIUC	4 bits	Fast power control = 0x00
Power control	8 bits	Signed integer, which expresses the change in power level (in 0.25 dB units) that the SS should apply to correct its current transmission power.
}		

EX1006, Table 116bw.

314. Therefore, 802.16a discloses "wherein the mobile station-specific transmission parameters further indicate power control information."

I. 802.16a in view of Heath renders obvious claim 4

315. Claim 4 depends from claim 1, and recites "*wherein the antenna transmission scheme is based on a channel condition.*" In my opinion, 802.16a, alone or in view of Heath, discloses claim 4.

316. In particular, 802.16a discloses that AAS uses "channel state information in the PHY at both downlink and uplink." EX1006, 67. "When channel state of the downlink is required at the BS, there are two ways to obtain it:

- By relying on reciprocity, thus using the uplink channel state estimation as the downlink channel state.

- By using feedback, thus transmitting the estimated channel state from the SS to BS."

EX1006, 67; *see also id.*, 220-221 (describing channel quality measurements).

317. As one example, 802.16a explains that the channel state information is used "in adjusting the direction of the adaptive array." *Id.*, 42-44.

318. 802.16a further explains that STC requires channel estimation. *Id.*, 203 ("There are two transmit antennas on the BS side and one reception antenna on the SS side. This scheme requires multiple input single output channel estimation. Decoding is very similar to maximum ratio combining.").

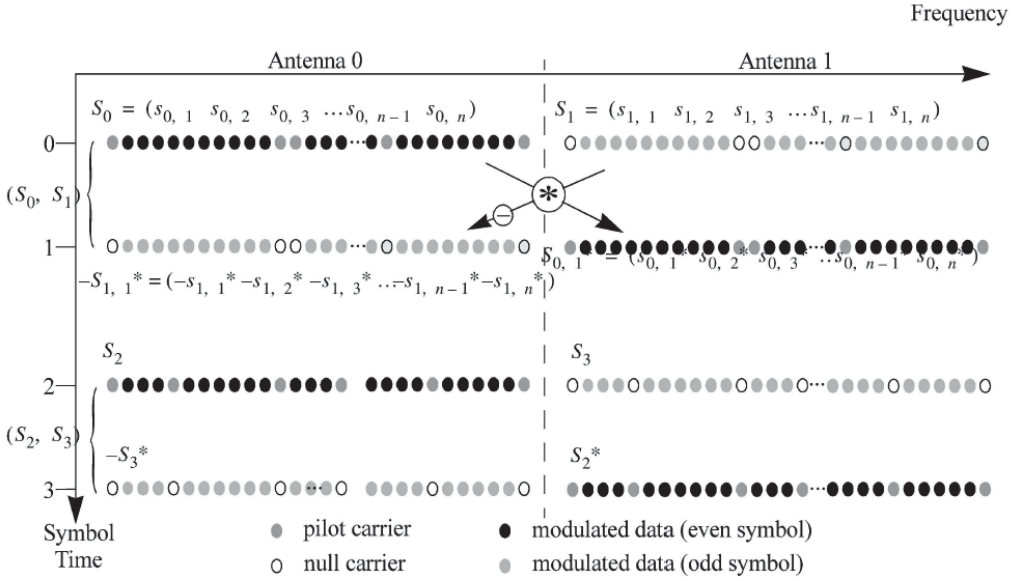

Figure 128bg— STC usage with OFDMA

EX1006, FIG. 128bg.

319. A POSITA would have thus understood that 802.16a's AAS and STC antenna transmission schemes are "based on a channel condition."

320. To the extent that Patent Owner may argue that 802.16a does not disclose "*wherein the antenna transmission scheme is based on a channel condition,*" Heath teaches this limitation. As I noted above, Heath discloses that the antenna transmission scheme—transmission diversity or spatial multiplexing—is based on transmission characteristics 450 (i.e., a channel condition). EX1007, 9:15-18 ("FIG. 4 represents transmission-specific inputs 450 and 452 that are considered by the mode determination logic 454 to determine the appropriate mode of operation for subsequent datastream transmissions."); *see also id.*, 9:18-11:50.

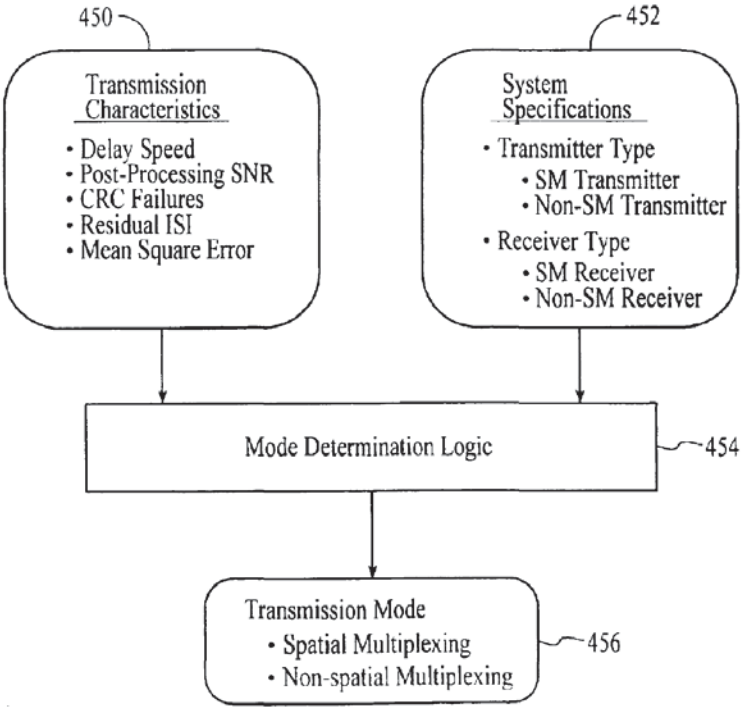

FIG. 4

EX1007, FIG. 4.

321. Moreover, as I discussed above, a POSITA would have been motivated to incorporate Heath's mode determination logic into 802.16a's BS to select the appropriate antenna scheme based on the CSI already available to the BS. When combined, 802.16a's BS would utilize Heath's mode determination logic to determine the appropriate mode of operation for subsequent data transmissions—transmission diversity or spatial multiplexing. This would have resulted in a "wireless communications system…that adapts its mode of operation" "in response to various transmission-specific variables." EX1007, 4:61-65; *see supra* VIII.B.

322. Therefore, 802.16a, alone or in combination with Heath, discloses "wherein the antenna transmission scheme is based on a channel condition."

J. 802.16a in view of Heath renders obvious claim 5

323. Claim 5 depends from claim 1, and recites "*wherein the corresponding subchannel configuration is selected based on a channel condition.*" In my opinion, 802.16a, alone or in combination with Heath, discloses claim 5.

324. As 802.16a explains, the BS uses the distributed carrier permutation for non-AAS traffic, including STC traffic, and the adjacent carrier permutation for AAS traffic. *See supra* VIII.C.7; *see also* EX1006, 200. 802.16a also explains that the BS utilizes channel state information to determine the appropriate transmission parameters. *See supra* VIII.I; *see also* EX1006, 23 (describing Channel measurement Report Request/Response (REP-REQ/RSP) messages), 42-44

(describing AAS Channel Feedback Request/Response (AAS-FBCK-REQ/RSP) messages), 67, 88-89 (describing channel testing), 220-221 (describing channel quality measurements).

325. 802.16a further explains that the BS utilizes CSI for AAS and STC. EX1006, 67, 203-5. This requires timely feedback from the SS to the BS with this information. *Id*., 67-68. While 802.16a does not explicitly state that the BS uses known channel state information to determine whether to utilize STC (and the distributed carrier permutation) or AAS (and the adjacent carrier permutation), doing so would have been obvious to a POSITA.

326. In my opinion, a POSITA would have known, for example, that if the channel is changing quickly due to movement of the SS, by the time the information reaches the BS the information is out-of-date. As such, it would have been obvious to a POSITA to use this known channel condition—indicating that the channel is changing quickly—to implement STC (and the distributed carrier permutation) for that SS to improve performance. Indeed, a POSITA would have known that by using transmission diversity (and the distributed carrier permutation), "the receiving device receives diverse signals that can be processed to reduce multipath fading and to suppress interfering signals." *See* EX1007, 1:33-43, 7:47-49, 8:13-18; *see also* EX1008, ¶103 ("The use of multiple transmit antennas for a given data stream increases diversity and improves reliability against deleterious path effects.");

EX1012, 763 ("Carriers can be allocated in a comb pattern, spreading them over the entire system bandwidth. This improves the frequency diversity, preventing all the carriers used by a user being lost in a null in the spectrum."); EX1009, ¶113 ("[D]iversity clusters, …, provide interference diversity gain.").

327. Alternatively, if the channel is relatively fixed due to lack of movement of the subscribers/mobile stations, it would have been obvious to a POSITA to use this known channel condition to implement AAS (and the adjacent carrier permutation) to improve overall performance of the system. For example, a POSITA would have understood that instead of using multiple antennas to transmit the same information to a single SS, those same antennas can transmit different information to different SSs at the same time. *See* EX1006, 66 ("AAS (see [B25], [B39], [B40], and [B42] for generic literature), through the use of more than one antenna element, can improve range and system capacity … The spectral efficiency can be increased linearly with the number of antenna elements. This is achieved by steering beams to multiple users simultaneously so as to realize an inter-cell frequency reuse of one and an in-cell reuse factor proportional to the number of antenna elements."); ; *see also* EX1012, 762 ("Grouping carriers minimises inter-user interference due to distortion, power level variation and frequency errors."); EX1008, ¶543 ("In the multi-user MIMO mode, the scheduling schemes are able to exploit multi-user selection diversity to achieve improved performance (i.e., higher throughput) even

though each terminal uses linear spatial (e.g., MMSE) processing technique. In fact, the multi-user diversity in the multi-user MIMO mode results in an average downlink throughput that exceeds the throughput achieved by dividing a transmission interval into four equal-duration sub-slots and assigning each MIMO terminal to a respective sub-slot."); EX1009, ¶118 (explaining that for "static subscribers, such as in fixed wireless access, the channels change very little over time. Selective cluster allocation using the coherence clusters achieves good performance.").

328. As I noted above, it would have also been obvious to utilize Heath's mode determination logic 454 in 802.16a's base station to determine the appropriate mode of operation for subsequent datastream transmissions—transmission diversity or MIMO—based on a channel condition (transmission characteristics 450). *See supra* VIII.B; EX1007, 9:15-18 ("FIG. 4 represents transmission-specific inputs 450 and 452 that are considered by the mode determination logic 454 to determine the appropriate mode of operation for subsequent datastream transmissions."), *see also id.*, 9:18-11:50.

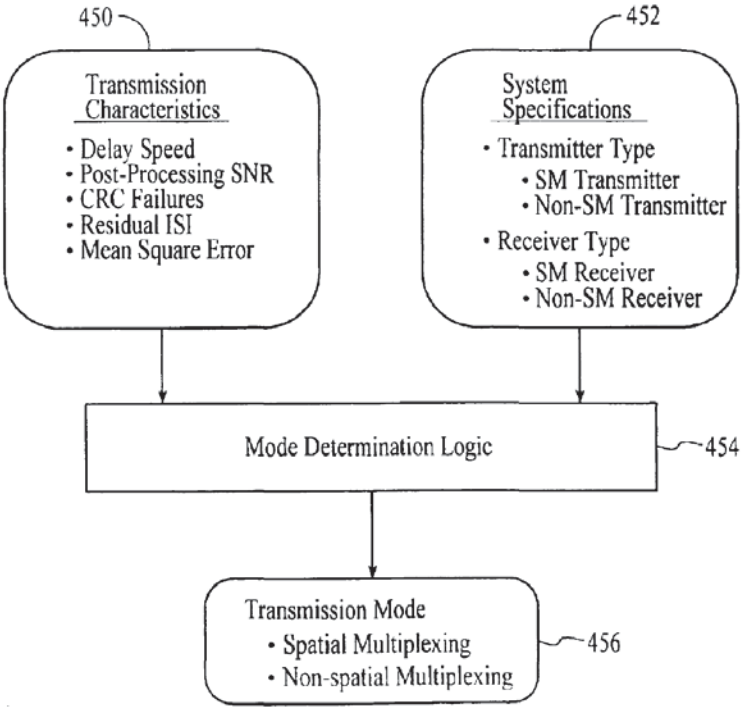

FIG. 4

EX1007, FIG. 4.

329. Thus, 802.16a, alone or in combination with Heath, discloses the corresponding subchannel configuration—adjacent carriers for AAS traffic or distributed carriers for STC traffic—would have been based on a channel condition.

K. 802.16a in view of Heath renders obvious claim 7

330. Claim 7 depends from claim 6, and recites "*further comprising a receiver configured to receive channel state information from the mobile station.*" For similar reasons I explained above with respect to claims 5 and 6, it is my opinion, 802.16a in view of Heath discloses claim 7. *See supra*, VIII.J, VIII.D.

331. In particular, 802.16a discloses the base station receiving channel state information from the mobile station. *See supra* VIII.I; *see also* EX1006, 23 (describing Channel measurement Report Request/Response messages between the BS and SS), 89, 220-221 (describing a BS receiving channel quality measurements from an SS).

L. 802.16a in view of Heath renders obvious claim 9

332. Claim 9 depends from claim 8, and recites "wherein the mobile station-specific transmission parameters further indicate a training pilot pattern."

333. For similar reasons I explained above with respect to claim 2, it is my opinion that 802.16a discloses claim 9. *See supra*, VIII.G.

M. 802.16a in view of Heath renders obvious claim 10

334. Claim 9 depends from claim 8, and recites "wherein the mobile station-specific transmission parameters further indicate a training pilot pattern."

335. For similar reasons I explained above with respect to claim 3, it is my opinion that 802.16a discloses claim 10. *See supra*, VIII.H.

N. 802.16a in view of Heath renders obvious claim 11

336. Claim 9 depends from claim 8, and recites "wherein the mobile station-specific transmission parameters further indicate a training pilot pattern."

337. For similar reasons I explained above with respect to claim 4, it is my opinion that 802.16a, alone or in combination with Heath, discloses claim 11. *See supra*, VIII.I.

O. 802.16a in view of Heath renders obvious claim 12

338. Claim 9 depends from claim 8, and recites "wherein the mobile station-specific transmission parameters further indicate a training pilot pattern."

339. For similar reasons I explained above with respect to claim 5, it is my opinion that 802.16a, alone or in combination with Heath, discloses claim 12. *See supra*, VIII.J.

P. 802.16a in view of Heath renders obvious claim 14

340. Claim 14 depends from claim 13, and recites "further comprising a transmitter configured to transmit channel state information to the serving base station."

341. For similar reasons I explained above with respect to claims 5-7, it is my opinion that 802.16a, alone or in combination with Heath, discloses claim 14. *See supra* VIII.J-L.

IX. GROUND 2: Claims 1-13 are unpatentable under 35 U.S.C. § 103 as obvious over Walton040 in view of Li017

A. A POSITA would have been motivated to combine Walton040 and Li017

342. As I described above, Walton040 is directed to "a multiple-access communication system 100 that … provides communication for a number of coverage areas 102a through 102g, each of which is serviced by a corresponding base station 104 (which may also be referred to as an access point, a node B, or some other terminology)." EX1008, ¶43. As Walton040 explains:

> various terminals 106 are dispersed throughout the system, and **each terminal may be fixed (i.e., stationary) or mobile**. Each terminal may communicate with one or possibly more base stations on the downlink and/or uplink at any given moment depending on whether or not it is active, whether or not "soft handoff" is employed, and so on. The downlink (forward link) refers to transmission from the base station to the terminal, and the uplink (reverse link) refers to transmission from the terminal to the base station. In FIG. 1, base station 104 a communicates with terminal 106a, base station 104b communicates with terminals 106b, 106c, and 106d, base station 104c communicates with terminals 106e, 106f, and 106g, and so on.

EX1008, ¶44 (emphasis added). I note that Walton040 also refers to the system as a wireless cellular communication system. *Id*. ¶¶45, 55.

343. In my opinion, a POSITA would have thus understood that Walton040's terminals can move within a cell (e.g., 106b within 102b (blue)), from cell to cell (e.g., 106b moving from 102b to 102e (green)), be close to cell boundaries (e.g., 106g (red)), or relatively fixed (e.g., 106k (purple)).

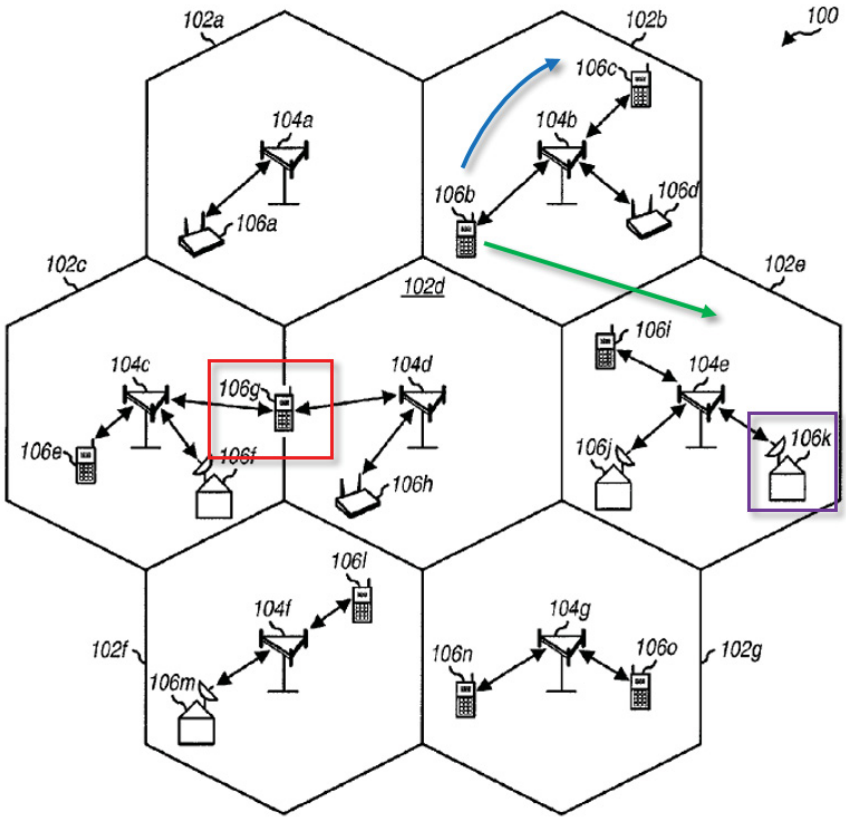

FIG. 1

EX1008, FIG. 1 (annotated).

344. To improve system performance, Walton040 discloses techniques "to adaptively process data prior to transmission, based on channel state information, to more closely match the data transmission to the capacity of the channel." EX1008, Abstract. In particular, "the system may adjust various operating parameters (e.g., the operating mode, channel, data rate, antenna(s) to transmit from, transmit power, and so on) in an adaptive manner based on system loading and/or some combination of performance metrics." *Id.*, ¶74.

345. Walton040 also explains that system 100 utilizes "orthogonal frequency division multiplex (OFDM), which effectively partitions the operating frequency band into a number of (N_F) frequency subchannels (i.e., frequency bins). At each time slot (which is a particular time interval that may be dependent on the bandwidth of the frequency subchannel), a modulation symbol may be transmitted on each of the N_F frequency subchannels." *Id*., ¶47.

346. I note that while Walton040 refers to "frequency subchannels" (*see id*., ¶47), a POSITA would have understood that these "frequency subchannels" correspond to the "subcarriers" as claimed in the '941 patent. For example, when Walton040 refers to "frequency subchannels" it is referring to the output of an FFT—"orthogonal frequency division multiplex (OFDM), which effectively partitions the operating frequency band into a number of (N_F) frequency subchannels (i.e., frequency bins). At each time slot (which is a particular time interval that may be dependent on the bandwidth of the frequency subchannel), a modulation symbol may be transmitted on each of the N_f frequency subchannels." *Id*.

347. In particular, Walton040 explains that "FIG. 3E also shows an embodiment of modulator 222 for OFDM. The modulation symbol vectors V_1 through V_{Nt} from TX channel processor 220e are provided to modulators 222a through 222t, respectively. In the embodiment shown in FIG. 3E, each modulator

222 includes an inverse Fast Fourier Transform (IFFT) 340, a cyclic prefix generator 342, and an upconverter 344." *Id*., ¶134.

348. "IFFT 340 converts each received modulation symbol vector into its time-domain representation (which is referred to as an OFDM symbol) using IFFT. **IFFT 340 can be designed to perform the IFFT on any number of frequency subchannels (e.g., 8, 16, 32, . . . , N_F)**. In an embodiment, for each modulation symbol vector converted to an OFDM symbol, cyclic prefix generator 342 repeats a portion of the time-domain representation of the OFDM symbol to form a 'transmission symbol' for a specific transmit antenna. The cyclic prefix insures that the transmission symbol retains its orthogonal properties in the presence of multipath delay spread, thereby improving performance against deleterious path effects. The implementation of IFFT 340 and cyclic prefix generator 342 is known in the art and not described in detail herein." *Id*. (emphasis added).

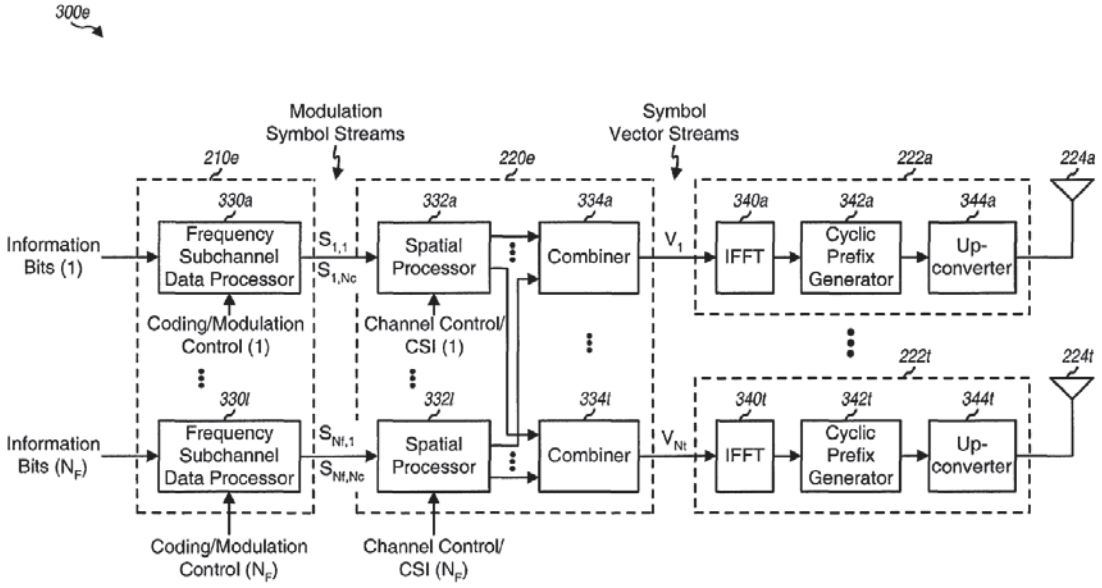

FIG. 3E

EX1008, FIG. 3E.

349. A POSITA would understand based on this that the N_f frequency subchannels are what are also referred to as subcarriers or tones. The FFT produces N_f frequency subcarriers, each with a modulation symbol. So Walton040 is using the term subchannel in place of tone or "subcarrier," as used in the '941 patent.

350. Indeed, this aligns with the description from the 941 patent: "In FIG. 8, after variable gains are applied to subchannels 804, they are inputted to the inverse discrete Fourier transform (IDFT) module." EX1001, 5:35-37.

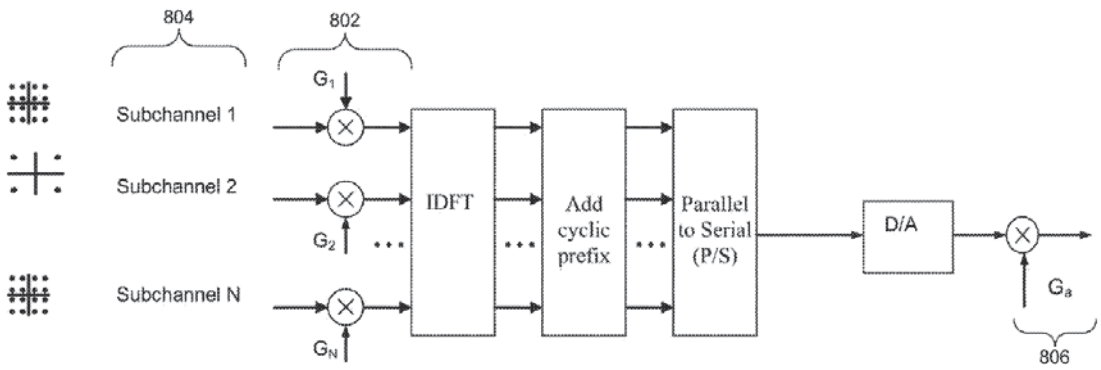

FIG. 8

EX1001, Fig. 8.

351. Moreover, Walton040 explains that for "a MIMO system utilizing OFDM, the modulation symbols may be transmitted on multiple frequency subchannels and from multiple transmit antennas." *Id*., ¶131. And that for "a MIMO system utilizing OFDM, the full-CSI processing (i.e., preconditioning) may be performed for each frequency subchannel." *Id*. In particular, "[t]he adjustment of the processing for each transmission channel based on the determined SNR for the channel allows the MIMO system to achieve high performance (i.e., high throughput or bit rate for a particular level of performance). The adaptive transmit processing may be applied to … a multi-carrier based MIMO system (e.g., a MIMO system utilizing OFDM)." *Id*., ¶328.

352. I note that while Walton040 describes transmitting OFDM symbols on any number of subcarriers N_F to different terminals, Walton040 does not explicitly describe how to assign or group subcarriers for use in the multi-carrier based MIMO system utilizing OFDM. *See* EX1008, ¶¶47-48, 52, 71, 76, 91, 129-135, 140, 170-

71, 283, 293, 323, 325, 332-33. Walton040 also does not explicitly disclose how the base station informs a mobile station of the subcarriers it should use to receive information.

353. In my opinion, a POSITA would have therefore looked to the prior art, such as Li017, for determining how to assign or group subcarriers and how to inform a mobile station of the subcarriers it should use to receive information.

354. Like Walton040, Li017 is directed to a multi-cell, multi-subscriber wireless systems using orthogonal frequency division multiplexing (OFDM) with mobile stations that can move about. EX1009, ¶¶24-25. And as I described above, Li017 recognized that "[m]ultipath causes frequency-selective fading" and "with aggressive frequency reuse plan, e.g., the same spectrum is used for multiple neighboring cells, the problem of intercell interference arises." *Id*., ¶¶5-6; *see supra* VII.D. As an example, Li017 explains that the "interference level on certain clusters may be lower, because these clusters may be unused in the neighboring cells. For example, in cell A, with respect to cluster A there is less interference because cluster A is unused in cell B (while it is used in cell C). Similarly, in cell A, cluster B will experience lower interference from cell B because cluster B is used in cell B but not in cell C." *Id*., ¶64.

355. Li017 thus explained that it "is clear that the intercell interference in an OFDMA system is also frequency selective and it is advantageous to adaptively allocate the subcarriers so as to mitigate the effect of intercell interference." *Id*., ¶6.

356. In particular, Li017 explains that "there are two categories of clusters: coherence clusters, containing multiple subcarriers close to each other and diversity clusters, containing multiple subcarriers with at least some of the subcarriers spread far apart over the spectrum." *Id.*, ¶111. I note that while Li017 refers to a "cluster" of subcarriers, this corresponds to the claimed "subchannel." Li017 further explains that each subcarrier configuration—diversity clusters ("distributed subcarriers") and coherence clusters ("localized subcarriers")—provide different advantages as I described above. *See supra* VII.E.

357. For example, Li017 explained that "diversity clusters, with channel coding across its subcarriers, provide interference diversity gain. Therefore, it is advantageous to assign diversity clusters to subscribers that are close (e.g., within the coherent bandwidth) to the cell boundaries and are more subject to inter-cell interference." *Id.*, ¶113. Li017 further explained that "for mobile subscribers, the channel time variance (the variance due to changes in the channel over time) can be very large. A high-gain cluster at one time can be in deep fade at another. Therefore, cluster allocation needs to be updated at a rapid rate, causing significant control overhead. In this case, diversity clusters can be used to provide extra robustness and

to alleviate the overhead of frequent cluster reallocation." *Id.*, ¶118; *see also* EX1012, 763 ("Carriers can be allocated in a comb pattern, spreading them over the entire system bandwidth. This improves the frequency diversity, preventing all the carriers used by a user being lost in a null in the spectrum. However, this allocation scheme may be susceptible to inter-user interference.").

358. For "static subscribers, such as in fixed wireless access, the channels change very little over time. Selective cluster allocation using the coherence clusters achieves good performance." *Id.*, ¶118; *see also* EX1012, 762 ("The simplest scheme is to group the carriers allocated to each user. Grouping carriers minimises inter-user interference due to distortion, power level variation and frequency errors. However, grouping the carrier makes the transmission susceptible to fading, as the whole group of carriers can be lost in a null in the spectrum.").

359. As another example, Li017 explains that "[s]ince the subcarriers in a coherence cluster are consecutive or close (e.g., within the coherent bandwidth) to each other, they are likely within the coherent bandwidth of the channel fading. Therefore, the channel gain of a coherence cluster can vary significantly and cluster selection can greatly improve the performance. On the other hand, the average channel gain of a diversity cluster has less of a degree of variation due to the inherent frequency diversity among the multiple subcarriers spread over the spectrum. With channel coding across the subcarriers within the cluster, diversity clusters are more

robust to cluster mis-selection (by the nature of diversification itself), while yielding possibly less gain from cluster selection." *Id.*, ¶114.

360. To select the appropriate cluster type, Li017 discloses that "each subscriber measures the SINR of each subcarrier cluster and reports these SINR measurements to their base station through an access channel." *Id.*, ¶45. "Upon receiving the feedback from a subscriber, the base station [] selects one or more clusters for the subscriber among the candidates (processing block 104)," *id.*, ¶47, and "notifies the subscriber about the cluster allocation through a downlink common control channel or through a dedicated downlink traffic channel if the connection to the subscriber has already been established (processing block 105)," *id.*, ¶48.

361. In particular, "the information in the feedback is ordered according to which clusters have the best performance relative to each other for the subscriber." *Id.*, ¶46.

362. As an example, "for cells containing mixed mobile and fixed subscribers, a channel/interference variation detector can be implemented at either the subscriber or the base station, or both. Using the detection results, the subscriber and the base station intelligently selects diversity clusters to mobile subscribers or fixed subscribers at cell boundaries, and coherence clusters to fixed subscribers close to the base station." *Id.*, ¶119.

363. "FIG. 11 is a flow diagram of one embodiment of a process for intelligent selection between diversity clusters and coherence clusters depending on subscribers mobility. The process is performed by processing logic that may comprise hardware (e.g., circuitry, dedicated logic, etc.), software (such as that which runs on, for example, a general purpose computer system or dedicated machine), or a combination of both." *Id.*, ¶120.

364. "Referring to FIG. 11, processing logic in the base station performs channel/interference variation detection (processing block 1101). Processing logic then tests whether the results of the channel/interference variation detection indicate that the user is mobile or in a fixed position close to the edge of the cell (processing block 1102). If the user is not mobile or is not in a fixed position close to the edge of the cell, processing transitions to processing block 1103 where processing logic in the base station selects coherence clusters; otherwise, processing transitions to processing block 1104 in which processing logic in the base station selects diversity clusters." *Id.*, ¶121.

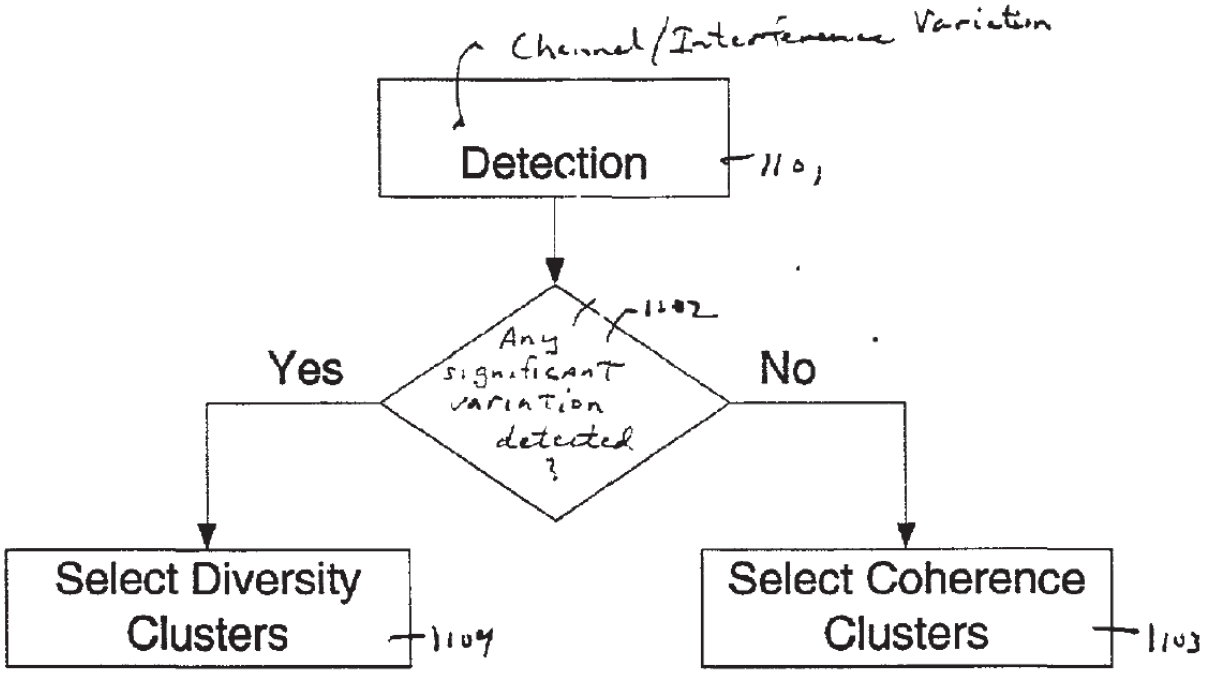

Figure 11

EX1009, FIG. 11.

365. "In one embodiment, the base station determines whether a subscriber is mobile or fixed by detecting a rate of change of pilot signals, or the normalized channel variation, and determining that the rate of change is greater than a predetermined threshold." EX1009, ¶¶122-125.

366. "After cluster selection, the base station notifies the subscriber about the cluster allocation through a downlink common control channel or through a dedicated downlink traffic channel if the connection to the subscriber has already been established…." *Id.*, ¶48.

367. In my opinion, a POSITA would have been motivated to modify Walton040 based on the teachings of Li017 so as to incorporate Li017's "process for intelligent selection between diversity clusters and coherence clusters depending on subscribers mobility" and informing the subscriber of the selected subchannel configuration via the existing control channel. *Id.*, ¶120.

368. In particular, a POSITA would have understood that the scenarios Li017 contemplates (e.g., mobile stations that are mobile, fixed position, or close to the edge of a cell) would have regularly occurred in Walton040's system. As a result, a POSITA would have recognized that Li017's process for intelligent selection between diversity and coherence clusters, depending on Walton040's subscriber's mobility and location, would have improved performance and mitigated the effect of intercell interference. EX1009, ¶¶113-114, 118-119.

369. I note that the '941 patent also admits that it was known that adjusting the subchannel configuration "in accordance with the state of the communication channel" improves performance. EX1001, 1:33-48 ("**To improve performance**, in addition to the MCS, other system functions such as channel estimation, transmission power control (TPC), and **subchannel configuration can be adjusted in accordance with the state of the communication channel**.") (emphasis added). In my opinion this further demonstrates that it would have been obvious to modify Walton040 in view of Li017.

370. For example, a POSITA would have understood that Li017's diversity cluster configuration ("distributed subcarriers") would "provide interference diversity gain" for a mobile station close to a cell boundary or moving quickly through a cell (red/blue), and the coherence cluster ("localized subcarriers") would "achieve[] good performance" for a stationary mobile station located away from a cell boundary (purple). *Id.*, ¶¶113-114, 118-119.

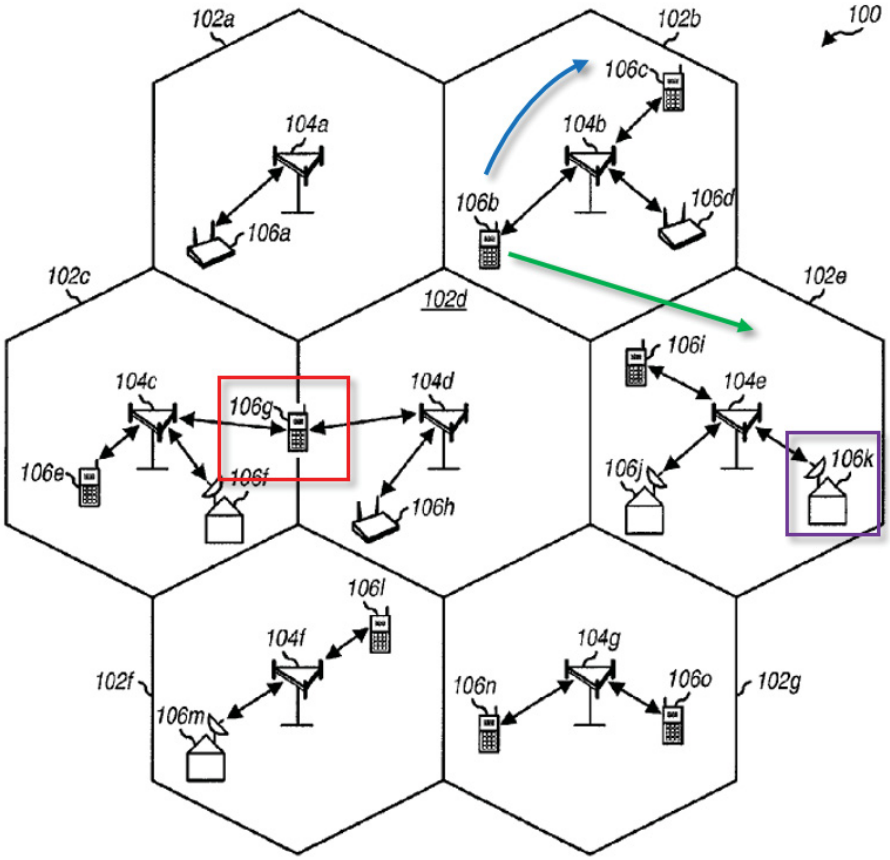

FIG. 1

EX1008, FIG. 1 (annotated).

371. In my opinion, modifying Walton040's base station to incorporate Li017's process for intelligent selection between diversity clusters and coherence clusters would have also required minimal modifications (e.g., by providing logic in Walton040's base station to select between diversity clusters and coherence clusters depending on subscribers mobility using existing CSI and informing the subscriber of the selected subchannel configuration using the existing control channel).

372. In addition to the motivations I described above, a POSITA would have been further motivated to combine Walton040 and Li017 because both are in the same general field of mobile communications, and address the same problem—improving the performance of wireless communication systems. In particular, they are both directed to multi-cell cellular communication systems using OFDM to achieve flexible operation and improved system performance.

373. Further, in my opinion, a POSITA would have combined the system of Walton040 with the teachings of Li017 by known methods, and the results of the combination would have been predictable to a POSITA (e.g., by intelligently selecting between diversity clusters and coherence clusters depending on subscribers mobility and informing the subscriber of the selected subchannel configuration using the existing control channel). As I have already discussed, the advantages of using different subchannel configurations were well-known. *See supra* VI.E.

374. In my opinion, the proposed combination of Walton040 and Li017 would involve nothing more than incorporating a well-known concept (i.e., Li017's process for intelligent selection between diversity and coherence clusters depending on subscribers' mobility and coherence clusters and informing the subscriber of the selected subchannel configuration) into a well-known system (i.e., Walton040's wireless communication system).

B. Walton040 in view of Li017 renders obvious claim 1

375. As I demonstrate below, it is my opinion that each and every element of independent claim 1 was well-known in the art prior to the '941 patent, and that claim 1 would have been obvious over the art.

1. Claim 1 Preamble (Element [1A]): A link adaptation method by a base station serving a plurality of mobile stations in an Orthogonal Frequency Division Multiplexing (OFDM) communication system, the communication system utilizing a transmission structure with time slots in the time domain and frequency subchannels in the frequency domain, the method comprising:

376. In my opinion, Walton040 discloses [1A].

377. Walton040 Figure 1 illustrates the multiple-access communication system 100 that supports a number of users (terminals 106a-o) in various coverage areas 102a-g, each of which is serviced by a corresponding base station 104. EX1008, ¶43.

378. "As shown in FIG. 1, various terminals 106 are dispersed throughout the system, and each terminal may be fixed (i.e., stationary) or mobile. Each terminal may communicate with one or possibly more base stations on the downlink and/or uplink at any given moment depending on whether or not it is active, whether or not 'soft handoff' is employed, and so on. The downlink (forward link) refers to transmission from the base station to the terminal, and the uplink (reverse link) refers to transmission from the terminal to the base station." *Id*., ¶44.

379. Walton040 explains that the multiple-access communication system may be a multiple-access cellular system using OFDM. EX1008, ¶¶5, 10, 462. In particular, Walton040 explains that system 100 utilizes "orthogonal frequency division multiplex (OFDM), which effectively partitions the operating frequency band into a number of (NF) frequency subchannels (i.e., frequency bins). At each time slot (which is a particular time interval that may be dependent on the bandwidth of the frequency subchannel), a modulation symbol may be transmitted on each of the NF frequency subchannels." EX1008, ¶47. At each time slot, data "may be transmitted on each of the N_F frequency subchannels." *Id.*; *see also id.*, ¶¶48, 52, 71, 76, 91, 129-135, 140, 170-71, 283, 293, 323, 325, 332-33.

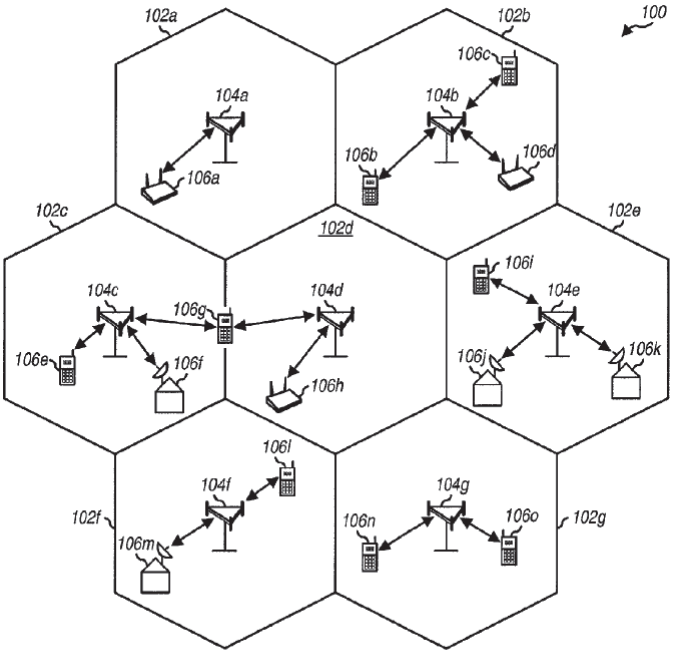

FIG. 1

EX1008, FIG. 1.

380. Walton040 Figure 2 illustrates "a base station 104 and two terminals 106 within system 100 for downlink data transmission." EX1008, ¶76.

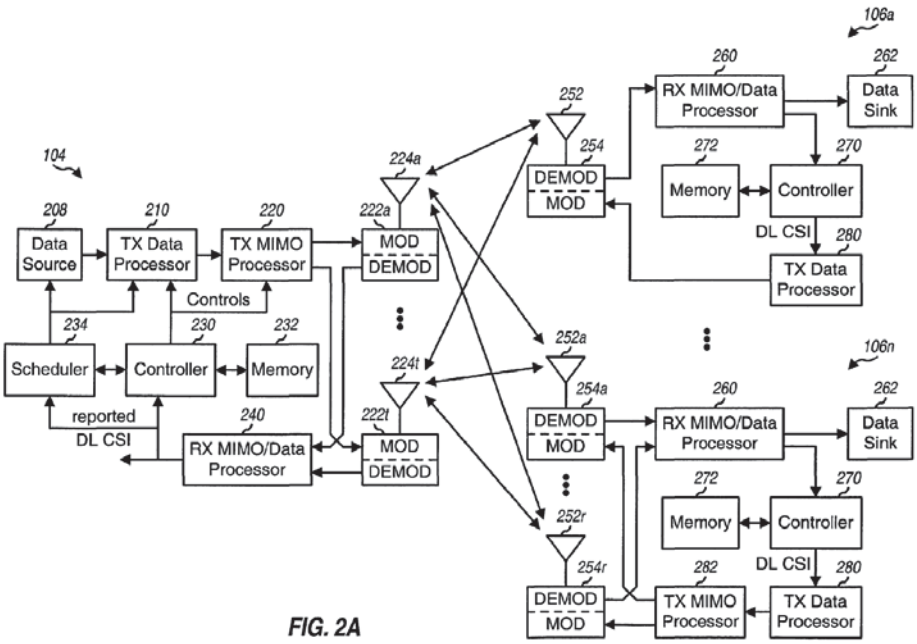

FIG. 2A

EX1008, FIG. 2A.

381. Moreover, Walton040 discloses techniques "to adaptively process data prior to transmission, based on channel state information, to more closely match the data transmission to the capacity of the channel." *Id*., Abstract. In particular, "the system may adjust various operating parameters (e.g., the operating mode, channel, data rate, antenna(s) to transmit from, transmit power, and so on) in an adaptive manner based on system loading and/or some combination of performance metrics." *Id*., ¶74.

382. Therefore, Walton040 discloses a "link adaptation method by a base station serving a plurality of mobile stations in an Orthogonal Frequency Division Multiplexing (OFDM) communication system, the communication system utilizing a transmission structure with time slots in the time domain and frequency subchannels in the frequency domain."

2. Element [1B]: transmitting a control message to a mobile station over a control channel, wherein:

383. In my opinion, Walton040 discloses [1B].

384. Walton040 discloses that:

> For both the downlink and uplink, the base station may control access to the system by allocating and de-allocating resources to users (e.g., on a demand basis). When users are allocated resources, **information may be provided to the users via a control channel to indicate the particular operating mode to use**. Moreover, the system may adjust

> various operating parameters (e.g., the operating mode, channel, data rate, antenna(s) to transmit from, transmit power, and so on) in an adaptive manner based on system loading and/or some combination of performance metrics, as described below.

EX1008, ¶74 (emphasis added).

385. "The pertinent information (e.g., schedule, data rate, coding and modulation scheme, transmit power, and so on) may be communicated to the affected terminals via **a control channel on the downlink**." *Id*., ¶93 (emphasis added).

386. "The schedule, antenna assignments, coding and modulation schemes, other information, or any combination thereof, may be conveyed to the scheduled terminals (e.g., via a **control channel**), at step 928." *Id*., ¶482 (emphasis added).

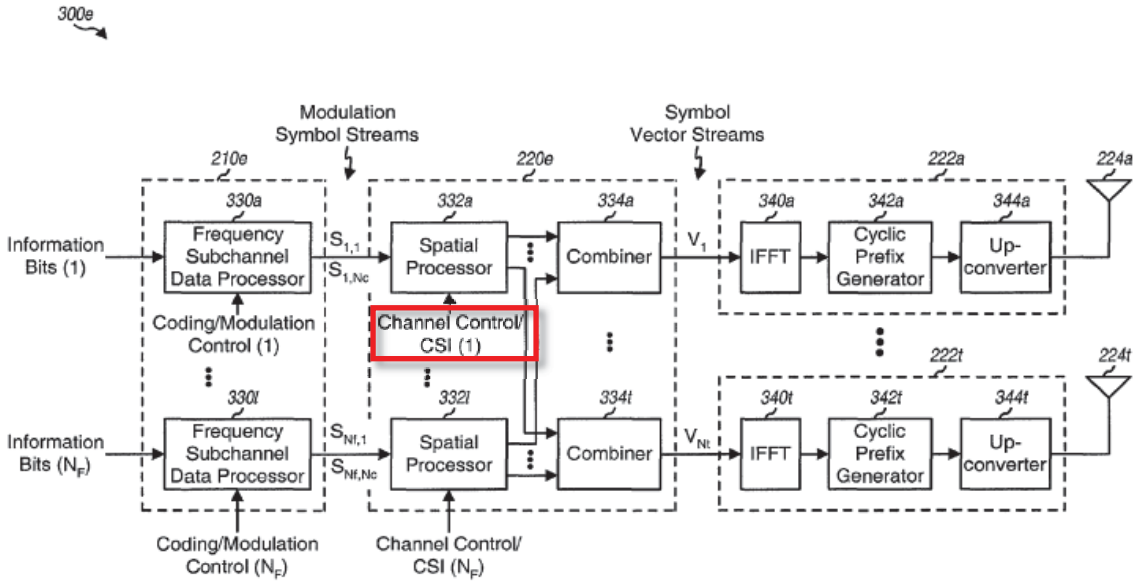

FIG. 3E

EX1008, FIG. 3E (annotated).

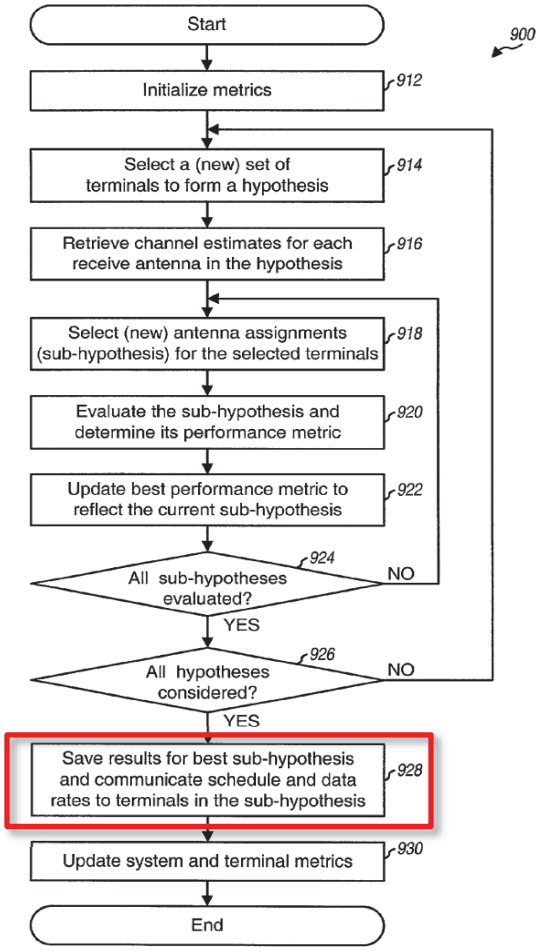

FIG. 9A

EX1008, FIG. 9A

387. Therefore, Walton040 discloses "transmitting a control message to a mobile station over a control channel."

388. Like Walton040, Li017 also discloses "*transmitting a control message to a mobile station over a control channel*." For example, Li017 states that the controller in the base station "informs the subscribers about the decisions through control signal channels (e.g., control signal/cluster allocation 1312 via OFDM transceiver 1305)." EX1008, ¶89, *see also id*., ¶¶39, 48.

3. Element [1C]: the control message contains transmission parameters allocated to the mobile station for a subsequent transmission of data by the base station over a frequency subchannel to the mobile station in a time slot; and

389. In my opinion, Walton040 discloses [1C].

390. As I noted above, Walton040 discloses that the base station in the communication system transmits data to a mobile station over a frequency subchannel in a time slot and the claimed "control message." *See supra* IX.B.1-2.

391. Walton040 further disclose that the control message contains transmission parameters allocated to the mobile station. For example, in Walton040, "[f]or both the downlink and uplink, **the base station may control access to the system by allocating and de-allocating resources to users (e.g., on a demand basis). When users are allocated resources, information may be provided to the users via a control channel to indicate the particular operating mode to use**. Moreover, the system may adjust various operating parameters (e.g., the operating mode, channel, data rate, antenna(s) to transmit from, transmit power, and so on) in an adaptive manner based on system loading and/or some combination of performance metrics, as described below." EX1008, ¶74.

392. "On the downlink, the terminals may derive the SNR for each transmission channel and report downlink CSI to the base station via a reverse channel. The base station would then use this information to schedule downlink transmission to the terminals, and to **determine the channel and antenna**

assignments, the operating mode, the data rate, and the transmit power to be used. On the uplink, the base station may derive the SNRs corresponding to individual terminals and would then employ this information to schedule the uplink transmissions. **The pertinent information (e.g., schedule, data rate, coding and modulation scheme, transmit power, and so on) may be communicated to the affected terminals via a control channel on the downlink**." *Id*., ¶93 (emphasis added).

393. "An aspect of the invention provides techniques to increase the downlink capacity of a MIMO system (e.g., a multiple-access cellular system). Data may be transmitted from a base station to one or more terminals using one of a number of different operating modes, which are described above. In the single-user MIMO mode, the available downlink resources may be allocated to a single MIMO terminal. In the multi-user MIMO mode (which is also referred to as the N-SIMO mode), the downlink resources may be allocated to a number of (N) distinct SIMO terminals, with each terminal demodulating a single data stream. And in the mixed mode, the downlink resources may be allocated to a combination of SIMO and MIMO terminals, with both types of terminals being simultaneously supported on the same channel." *Id*., ¶462; *see also id*., ¶482.

394. Moreover, Walton040 discloses that the transmission parameters are "for a subsequent transmission of data by the base station over a frequency subchannel to the mobile station in a time slot."

395. As Walton040 explains, "FIG. 3E is a block diagram of an embodiment of a transmitter unit 300e, which utilizes OFDM and is capable of independently processing data for each frequency subchannel. Within a TX data processor 210e, the stream of information bits for each frequency subchannel used for data transmission is provided to a respective frequency subchannel data processor 330. Each data processor 330 processes data for a respective frequency subchannel of the OFDM system, and may be implemented similar to TX data processor 210a, 210b, or 210d, or with some other design. In one embodiment, data processor 330 demultiplexes the frequency subchannel data stream into a number of data substreams, one data substream for each spatial subchannel selected for use for the frequency subchannel. Each data substream is then encoded, interleaved, and symbol mapped to generate modulation symbols for the data substream. **The coding and modulation for each frequency subchannel data stream or each data substream may be adjusted based on the coding and modulation control signals**. Each data processor 330 provides up to N_C modulation symbol streams for up to N_C spatial subchannels selected for use for the frequency subchannel." EX1008, ¶130 (emphasis added).

396. "[t]he number of information bits that may be transmitted for each modulation symbol for a particular level of performance (e.g., one percent packet error rate (PER)) is dependent on the SNR of the transmission channel. Thus, **the coding scheme and modulation scheme for each transmission channel may be selected based on the available partial CSI**. The channel interleaving may also be adjusted based on the available partial CSI, as indicated by the dashed line for the coding control into block 314." *Id*., ¶100 (emphasis added); *see also id.*, ¶367.

397. "Within a TX MIMO processor 220e, the up to N_C modulation symbol streams from each data processor 330 are provided to a respective spatial processor 332, which processes the received modulation symbols **based on the channel control** and/or the available CSI." *Id*., ¶131 (emphasis added).

398. "Base station 104 may adjust (i.e., adapt) its processing based on the full/partial CSI from terminals 106. For example, the coding for each transmission channel may be adjusted such that the information bit rate matches the transmission capability supported by the channel SNR. Additionally, the modulation scheme for the transmission channel may be selected based on the channel SNR. Other processing (e.g., interleaving) may also be adjusted and are within the scope of the invention. The adjustment of the processing for each transmission channel based on the determined SNR for the channel allows the MIMO system to achieve high performance (i.e., high throughput or bit rate for a particular level of performance).

The adaptive transmit processing may be applied to a single-carrier MIMO system or a multi-carrier based MIMO system (e.g., a MIMO system utilizing OFDM)." EX1008, ¶328.

399. Walton040 Figure 3E illustrates the BS using the transmission parameters for the transmission of data:

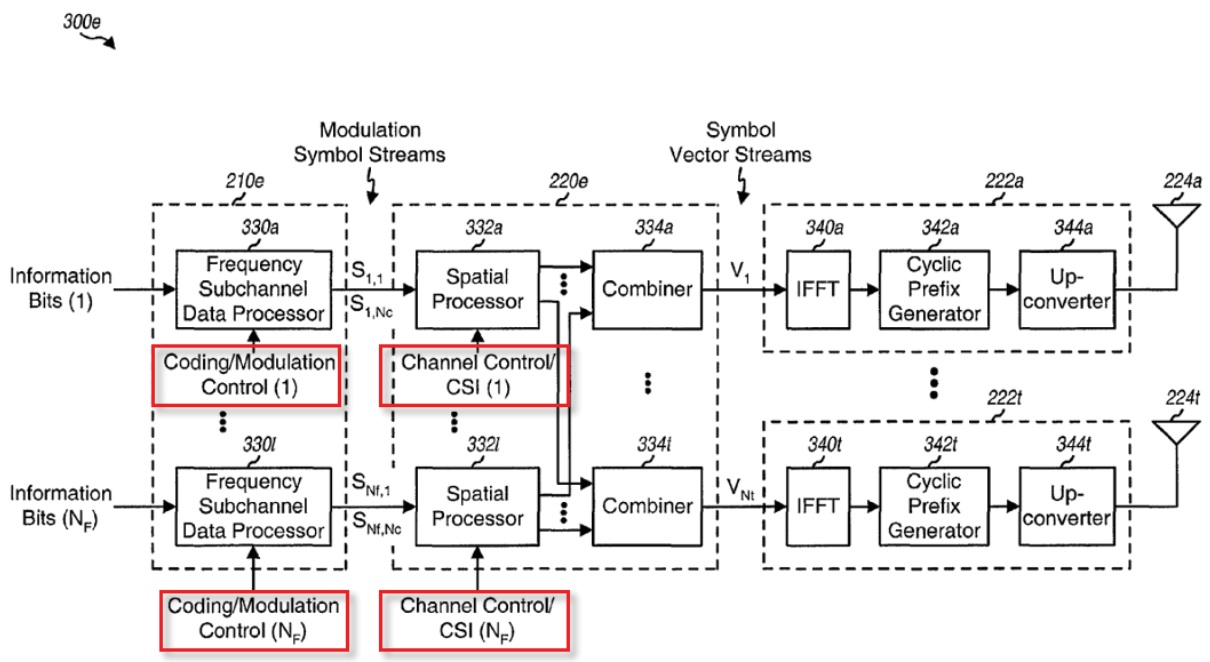

EX1008, FIG. 3E (annotated).

400. Therefore, Walton040 discloses "the control message contains transmission parameters allocated to the mobile station for a subsequent transmission of data by the base station over a frequency subchannel to the mobile station in a time slot."

4. Element [1D]: the mobile station-specific transmission parameters indicate an antenna transmission scheme

401. In my opinion, Walton040 discloses [1D].

402. Walton040 discloses that the base station uses CSI "to schedule downlink transmission to the terminals, and to **determine the channel and antenna assignments**, **the operating mode**, the data rate, and the transmit power to be used. On the uplink, the base station may derive the SNRs corresponding to individual terminals and would then employ this information to schedule the uplink transmissions. **The pertinent information** (e.g., schedule, data rate, coding and modulation scheme, transmit power, and so on) **may be communicated to the affected terminals via a control channel on the downlink**." EX1008, ¶93 (emphasis added); *see also id.*, ¶82 ("Scheduler 234 uses the reported downlink CSI to perform a number of functions such as (1) selecting the best set of terminals for data transmission and (2) **assigning the available transmit antennas to the selected terminals**. Scheduler 234 or controller 230 further uses the reported downlink CSI to determine the coding and modulation scheme to be used for each transmit antenna**.** Scheduler 234 may schedule terminals to achieve high throughput and/or based on some other performance criteria or metrics, as described below.") (emphasis added).

403. As Walton040 explains, the operating mode include the following antenna transmission schemes:

TABLE 1

Transmit Antennas	Receive Antennas 1	Receive Antennas N_R
1	SISO	SIMO
N_T	MISO	MIMO

EX1008, Table 1.

Id., ¶93; *see also id.*, ¶¶57-68.

404. In particular, Walton040 explains that the "post-processed SNRs corresponding to this set of terminals and their **antenna assignments** may be used to select the proper coding and modulation schemes for the data streams to be transmitted to the terminals. **The schedule, antenna assignments, coding and modulation schemes, other information, or any combination thereof, may be conveyed to the scheduled terminals (e.g., via a control channel)**, at step 928." EX1008, ¶482 (emphasis added); *see also id.*, ¶¶74, 82, 93, 148 ("The base station may then perform scheduling and antenna assignment for each of the possible beam-forming matrices (using the reported SNR vectors), and select a particular beam-forming matrix as well as a set of terminals and their antenna assignments that achieve the best use of the available resources.").

405. Therefore, Walton040 discloses "the mobile station-specific transmission parameters indicate an antenna transmission scheme."

406. In my opinion, Walton040 also discloses "*the mobile station-specific transmission parameters indicate an antenna transmission scheme*" for the reasons I explain below with respect to [1F]. *See infra* IX.B.6.

5. Element [1E]: the mobile station-specific transmission parameters indicate … a corresponding subchannel configuration

407. In my opinion, Walton040 in view of Li017 discloses [1E].

408. As I explained above, Walton040 discloses that the base station transmits data to the mobile station over "subcarriers" and transmits the control message containing transmission parameters to the mobile station. *See supra* IX.B.1, IX.B.3.

409. As I also noted above, Walton040 does not explicitly disclose that the control information includes an indication of a corresponding subchannel configuration for the disclosed "subcarriers." However, Li017 teaches this limitation. *See supra* IX.A.

410. As an example, Li017 explains that "each subscriber measures the SINR of each subcarrier cluster and reports these SINR measurements to their base station through an access channel. The SINR value may comprise the average of the SINR values of each of the subcarriers in the cluster." EX1009, ¶45. "Upon receiving the feedback from a subscriber, the base station further selects one or more clusters for the subscriber among the candidates (processing block 104)." *Id*., ¶47.

411. As Li017 explains that "there are two categories of clusters: coherence clusters, containing multiple subcarriers close to each other and diversity clusters, containing multiple subcarriers with at least some of the subcarriers spread far apart over the spectrum." *Id*., ¶111.

412. In my opinion, a POSITA would have readily understood that Li017's cluster" corresponds to the claimed "subchannel." Moreover, a POSITA would have readily understood that Li017's coherence cluster of subcarriers corresponds to the claimed "subchannel configuration characterized by … localized subcarriers in the frequency domain" and Li017's diversity cluster of subcarriers corresponds to the claimed "subchannel configuration characterized by distributed subcarriers … in the frequency domain." Indeed, Li017's description of its coherence and diversity clusters of subcarriers is just like the '941 patent.

413. For example, Li017 explains that the "closeness of the multiple subcarriers in **coherence clusters is preferably within the channel coherence bandwidth**, i.e. the bandwidth within which the channel response remains roughly the same, which is typically within 100 kHz for many cellular systems. On the other hand, the spread of subcarriers in diversity clusters is preferably larger than the channel coherence bandwidth, typically within 100 kHz for many cellular systems." *Id*., ¶11 (emphasis added). As the '941 patent explains, "**when all subcarriers in one subchannel are adjacent or close to each other, they are more likely to fall**

in the coherent bandwidth of a fading channel; thus they can be allocated to users that are either fixed in location or are move slowly. On the other hand, when subcarriers and/or subchannels that belong to one user are scattered in the frequency domain, it results in higher diversity gains for the fast moving users, and a better interference averaging effect." EX1001, 7:1-9.

414. Li017's Figure 9 "illustrates exemplary cluster formats for coherence clusters and diversity clusters for Cells A-C." EX1009, ¶112.

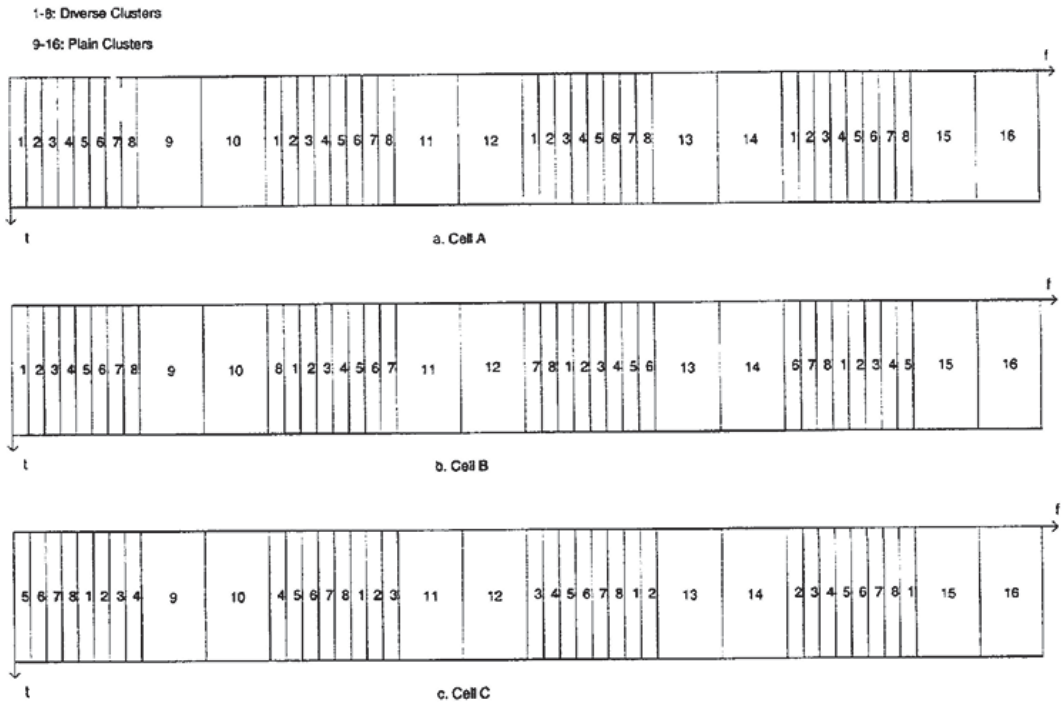

Figure 9

EX1009, FIG. 9.

415. "FIG. 11 is a flow diagram of one embodiment of a process for intelligent selection between diversity clusters and coherence clusters depending on subscribers mobility. The process is performed by processing logic that may

comprise hardware (e.g., circuitry, dedicated logic, etc.), software (such as that which runs on, for example, a general purpose computer system or dedicated machine), or a combination of both." EX1009, ¶120.

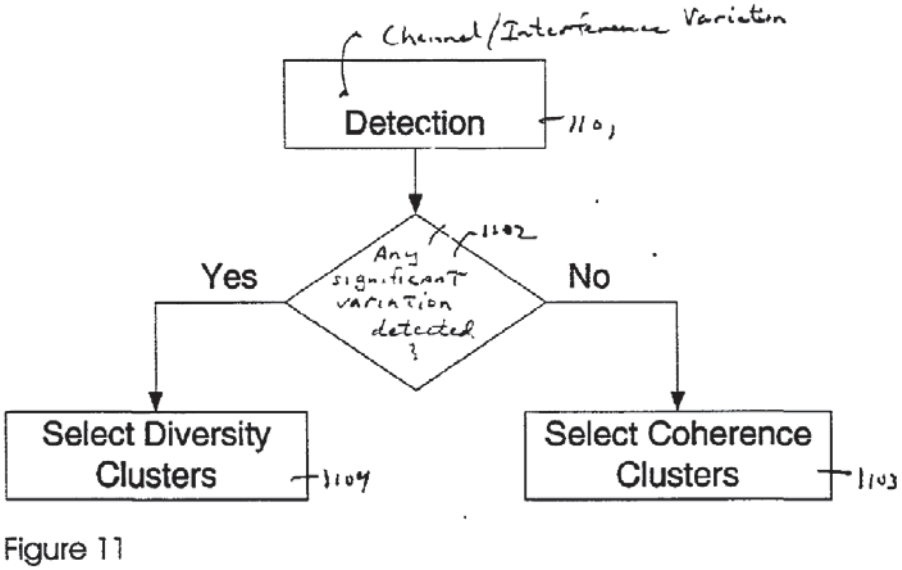

EX1009, FIG. 11.

416. "For static subscribers, such as in fixed wireless access, the channels change very little over time. Selective cluster allocation using the coherence clusters achieves good performance. On the other hand, for mobile subscribers, the channel time variance (the variance due to changes in the channel over time) can be very large. A high-gain cluster at one time can be in deep fade at another. Therefore, cluster allocation needs to be updated at a rapid rate, causing significant control overhead. In this case, diversity clusters can be used to provide extra robustness and to alleviate the overhead of frequent cluster reallocation. In one embodiment, cluster allocation is performed faster than the channel changing rate, which is often

measured by the channel Doppler rate (in Hz), i.e. how many cycles the channel changes per second where the channel is completely different after one cycle. Note that selective cluster allocation can be performed on both coherence and diversity clusters." EX1009, ¶118.

417. "[F]or cells containing mixed mobile and fixed subscribers, a channel/interference variation detector can be implemented at either the subscriber or the base station, or both. Using the detection results, the subscriber and the base station intelligently selects diversity clusters to mobile subscribers or fixed subscribers at cell boundaries, and coherence clusters to fixed subscribers close to the base station. The channel/interference variation detector measures the channel (SINR) variation from time to time for each cluster. For example, in one embodiment, the channel/interference detector measures the power difference between pilot symbols for each cluster and averages the difference over a moving window (e.g., 4 time slots). A large difference indicates that channel/interference changes frequently and subcarrier allocation may be not reliable. In such a case, diversity clusters are more desirable for the subscriber." *Id*., ¶119.

418. "FIG. 11 is a flow diagram of one embodiment of a process for intelligent selection between diversity clusters and coherence clusters depending on subscribers mobility. The process is performed by processing logic that may comprise hardware (e.g., circuitry, dedicated logic, etc.), software (such as that

which runs on, for example, a general purpose computer system or dedicated machine), or a combination of both." *Id*., ¶120.

419. "Referring to FIG. 11, processing logic in the base station performs channel/interference variation detection (processing block 1101). Processing logic then tests whether the results of the channel/interference variation detection indicate that **the user is mobile or in a fixed position close to the edge of the cell** (processing block 1102). **If the user is not mobile or is not in a fixed position** close to the edge of the cell, processing transitions to processing block 1103 where processing logic in the base station selects coherence clusters; otherwise, processing transitions to processing block 1104 in which processing logic in the base station selects diversity clusters." *Id*., ¶121 (emphasis added).

420. I note Li017 also discloses allocating subcarriers in the same way as the '941 patent. "[W]hen all subcarriers in one subchannel are adjacent or close to each other, they are more likely to fall in the coherent bandwidth of a fading channel; thus they can be allocated to **users that are either fixed in location or are move slowly**." EX1001, 7:1-9 (emphasis added). "On the other hand, when subcarriers and/or subchannels that belong to one user are scattered in the frequency domain, it results in higher diversity gains for the **fast moving users**, and a better interference averaging effect." *Id.* (emphasis added).

421. "After cluster selection, the base station notifies the subscriber about the cluster allocation through a downlink common control channel or through a dedicated downlink traffic channel if the connection to the subscriber has already been established (processing block 105). In one embodiment, the base station also informs the subscriber about the appropriate modulation/coding rates." EX1009, ¶48.

422. As I discussed above, a POSITA would have been motivated to employ Li017's method for subcarrier allocation in the base station of 802.16a. When combined, 802.16a's base station would use the existing CSI to determine the mobility of the mobile station (fixed or mobile), select the appropriate subchannel configuration (localized or distributed subcarriers) to achieve good performance, and inform the mobile station of the selected subchannel configuration—coherence cluster or diversity cluster. *See supra* IX.A.

423. This would have resulted in Walton040's "*mobile station-specific transmission parameters indicat[ing] ... a corresponding subchannel configuration*." In other words, combination of Walton040 and Li017 discloses a mobile station-specific transmission parameter capable of indicating, as alternatives, both distributed subcarriers and localized subcarriers in the frequency domain as subchannel configurations.

6. Element [1F]: the antenna transmission scheme comprising a transmission diversity scheme or a multiple-input multiple-output (MIMO) scheme

424. In my opinion, Walton040 discloses [1F].

425. As I explained above, Walton040 discloses the claimed "the antenna transmission scheme." *See supra* IX.B.4.

426. Moreover, Walton040 explains that the communication system 100 is "designed to support a number of operating modes." EX1008, ¶56. In particular, "each base station may be equipped with both multiple transmit and receive antennas for data transmission and reception, and each terminal may be equipped with a single transmit/receive antenna or multiple transmit/receive antennas for data transmission and reception.…Table 1 summarizes a matrix of operating modes that may be supported by system 100." *Id*., ¶56.

TABLE 1

Transmit	Receive Antennas	
Antennas	1	N_R
1	SISO	SIMO
N_T	MISO	MIMO

EX1008, Table 1.

427. "A base station equipped with multiple transmit antennas and multiple receive antennas is able to support all operating modes listed above." EX1008, ¶68.

428. As Walton040 explains, MISO is "characterized by multiple transmit antennas and a single receive antenna. This operating mode may be used for transmit diversity." *Id.*, ¶60. "Diversity only—the use of both multiple transmit and receive antennas (i.e., both transmit and receive diversity) to achieve highly reliable transmission of a single data stream." *Id.*, ¶63.

429. MIMO is "characterized by multiple transmit antennas and multiple receive antennas." *Id.*, ¶61. Single-user MIMO uses "both multiple transmit and receive antennas to achieve high data rates for a single terminal by creating multiple parallel transmission channels by exploiting the spatial dimensionality of the communication channel." *Id.*, ¶64.

430. Multi-user MIMO uses "multiple transmit and receive antennas to accommodate communication with multiple terminals concurrently on the same channel." *Id.*, ¶65. "In the multi-user MIMO mode (which is also referred to as the N-SIMO mode), the downlink resources may be allocated to a number of (N) distinct SIMO terminals, with each terminal demodulating a single data stream." *Id*., ¶462.

431. Walton040 discloses that the base station controls access to the system by allocating resources to mobile stations and providing information about the allocated resources to the mobile station "via a control channel to indicate the particular operating mode to use." *Id*., ¶74.

432. "On both the downlink and uplink, full or partial CSI may be used to adjust various operational parameters of the system. On the downlink, the terminals may derive the SNR for each transmission channel and report downlink CSI to the base station via a reverse channel. The base station would then use this information to schedule downlink transmission to the terminals, and to determine the channel and antenna assignments, the operating mode, the data rate, and the transmit power to be used. On the uplink, the base station may derive the SNRs corresponding to individual terminals and would then employ this information to schedule the uplink transmissions. The pertinent information (e.g., schedule, data rate, coding and modulation scheme, transmit power, and so on) may be communicated to the affected terminals via a control channel on the downlink." *Id*., ¶93.

433. Walton040 explains that the "[i]f all hypotheses have been considered at step 926, then the specific set of terminals scheduled for data transmission in the upcoming transmission interval and their assigned transmit antennas are known. The post-processed SNRs corresponding to this set of terminals and their antenna assignments may be used to select the proper coding and modulation schemes for the data streams to be transmitted to the terminals. **The** schedule, **antenna assignments**, coding and modulation schemes, other information, or any combination thereof, **may be conveyed to the scheduled terminals (e.g., via a control channel)**, at step 928." *Id*., ¶482 (emphasis added); *see also id*., ¶82

("Scheduler 234 uses the reported downlink CSI to perform a number of functions such as (1) selecting the best set of terminals for data transmission and (2) assigning the available transmit antennas to the selected terminals. Scheduler 234 or controller 230 further uses the reported downlink CSI to determine the coding and modulation scheme to be used for each transmit antenna**.** Scheduler 234 may schedule terminals to achieve high throughput and/or based on some other performance criteria or metrics, as described below."), claims 1-5, 8-9.

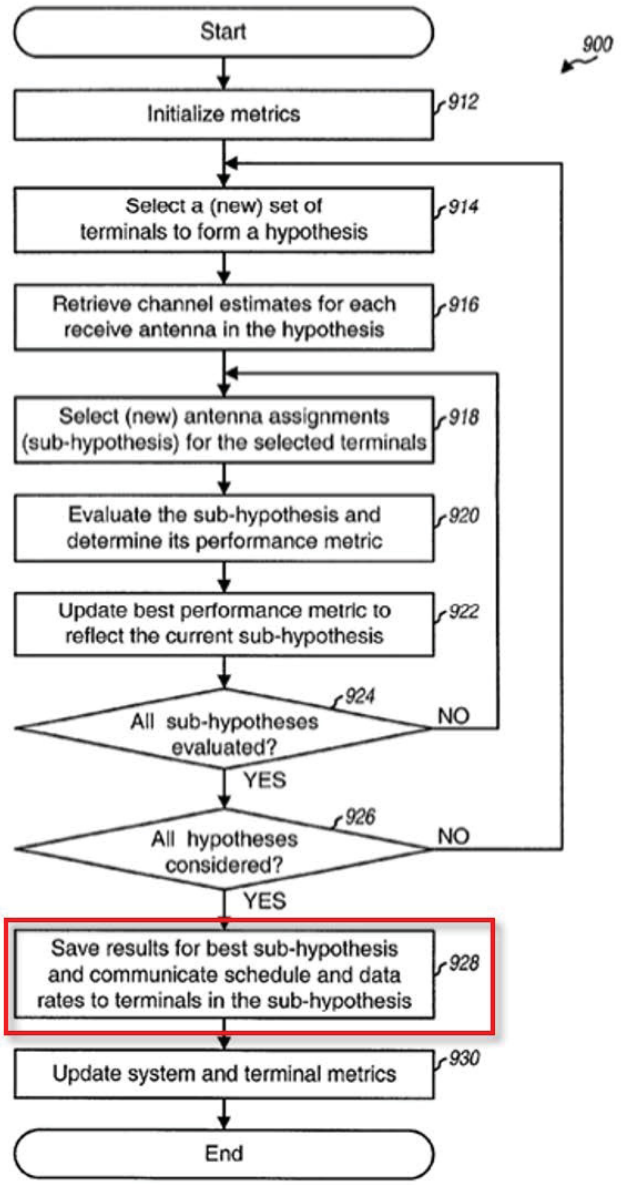

FIG. 9A

EX1008, FIG. 9A (annotated).

434. Therefore, Walton040 discloses "the antenna transmission scheme comprising a transmission diversity scheme or a multiple-input multiple-output (MIMO) scheme."

7. Element [1G]: the corresponding subchannel configuration characterized by distributed subcarriers or localized subcarriers in the frequency domain

435. In my opinion, Walton040 in view of Li017 discloses [1G].

436. In particular, as I explained above for [1E], the combination of Walton040 and Li017 discloses the corresponding subchannel configuration characterized by distributed subcarriers or localized subcarriers in the frequency domain. *See supra* IX.B.5.

8. Element [1H]: transmitting a data packet to the mobile station over the frequency subchannel in accordance with the mobile station-specific transmission parameters.

437. In my opinion, Walton040 in view of Li017 discloses [1H].

438. As an initial matter, Walton040 states that the "number of information bits that may be transmitted for each modulation symbol for a particular level of performance (e.g., one percent **packet error rate (PER)**) is dependent on the SNR of the transmission channel." EX1008, ¶100. A POSITA would have understood that because Walton040 relies on a packet error rate (incorrect data packet/total data packets) to define a particular level of performance, Walton040's base station transmits data to mobile stations in the form of packets.

439. Moreover, Walton040 explains that the base station transmits a data packet to the mobile station over the frequency subchannel in accordance with the

mobile station-specific transmission parameters (e.g., the coding, modulation, antenna assignments, and operating mode). *See supra* IX.B.3.

440. "FIG. 3E is a block diagram of an embodiment of a transmitter unit 300e, which utilizes OFDM and is capable of independently processing data for each frequency subchannel. Within a TX data processor 210e, the stream of information bits for each frequency subchannel used for data transmission is provided to a respective frequency subchannel data processor 330. Each data processor 330 processes data for a respective frequency subchannel of the OFDM system, and may be implemented similar to TX data processor 210a, 210b, or 210d, or with some other design. In one embodiment, data processor 330 demultiplexes the frequency subchannel data stream into a number of data substreams, one data substream for each spatial subchannel selected for use for the frequency subchannel. Each data substream is then encoded, interleaved, and symbol mapped to generate modulation symbols for the data substream. **The coding and modulation for each frequency subchannel data stream or each data substream may be adjusted based on the coding and modulation control signals**. Each data processor 330 provides up to N_C modulation symbol streams for up to N_C spatial subchannels selected for use for the frequency subchannel." EX1008, ¶130.

441. "Within a TX MIMO processor 220e, the up to N_C modulation symbol streams from each data processor 330 are provided to a respective spatial processor

332, which processes the received modulation symbols **based on the channel control** and/or the available CSI." *Id.*, ¶131 (emphasis added).

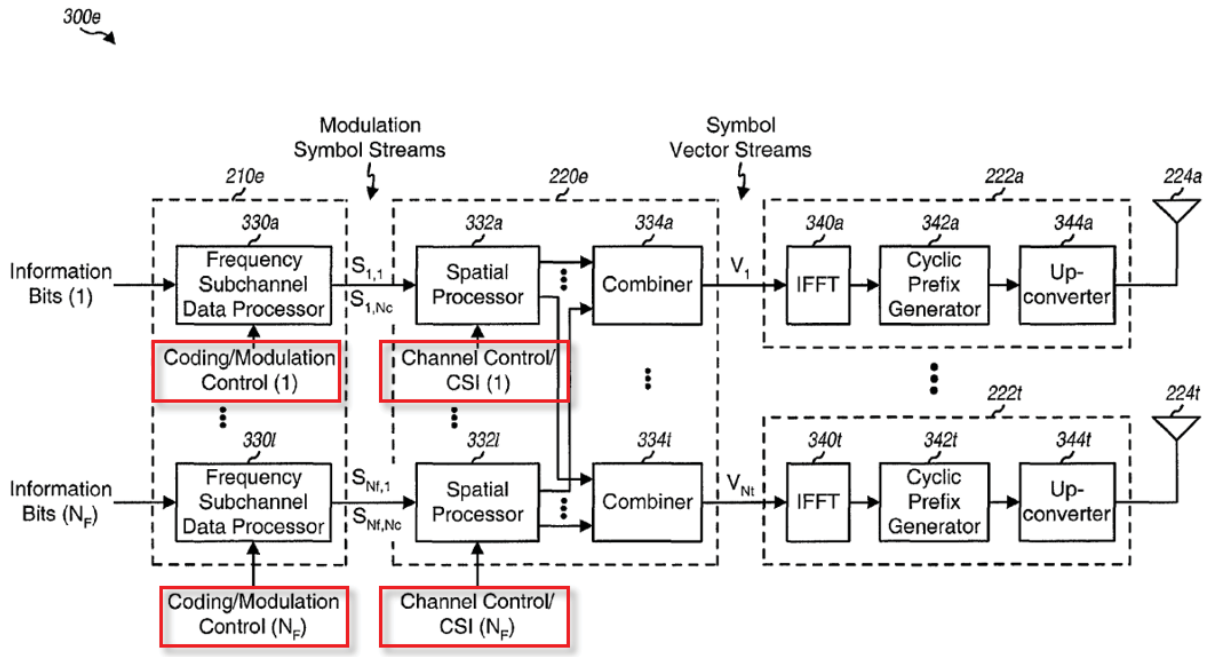

FIG. 3E

EX1008, FIG. 3E (annotated).

442. As another example, Walton040 explains that the "[i]f all hypotheses have been considered at step 926, then the specific set of terminals scheduled for data transmission in the upcoming transmission interval and their assigned transmit antennas are known. The post-processed SNRs corresponding to this set of terminals and their antenna assignments may be used to select the proper coding and modulation schemes for the data streams to be transmitted to the terminals. The schedule, antenna assignments, coding and modulation schemes, other information,

or any combination thereof, may be conveyed to the scheduled terminals (e.g., via a control channel), at step 928." EX1008, ¶482; *see also id.*, claims 1-6, 8-9.

443. Therefore, Walton040 in view of Li017 discloses "transmitting a data packet to the mobile station over the frequency subchannel in accordance with the mobile station-specific transmission parameters."

C. Walton040 in view of Li017 renders obvious claim 6

444. Claim 6 is an independent claim that recites similar limitations to method claim 6 in the form of an apparatus claims—a "base station serving a plurality of mobile stations." Thus for similar reasons as I discussed with respect to claim 1, and below, it is my opinion that each and every element of independent claim 6 was well-known in the art prior to the '941 patent, and that claim 6 would have been obvious over the art. *See supra* IX.B.

1. Claim 6 Preamble (Element [6A]): A base station serving a plurality of mobile stations in an Orthogonal Frequency Division Multiplexing (OFDM) communication system, the communication system utilizing a transmission structure with time slots in the time domain and frequency subchannels in the frequency domain, the base station comprising a transmitter configured to:

445. For similar reasons I explained above with respect to [1A], it is my opinion that Walton040 discloses [6A]. *See supra*, IX.B.1.

2. Element [6B]: transmit a control message to a mobile station over a control channel, wherein:

446. For similar reasons I explained above with respect to [1B], it is my opinion that Walton040 discloses [6B]. *See supra*, IX.B.2.

3. Element [6C]: the control message contains transmission parameters allocated to the mobile station for a subsequent transmission of data by the base station over a frequency subchannel to the mobile station in a time slot; and

447. For similar reasons I explained above with respect to [1C], it is my opinion that Walton040 discloses [6C]. *See supra*, IX.B.3.

4. Element [6D]: the mobile station-specific transmission parameters indicate an antenna transmission scheme

448. For similar reasons I explained above with respect to [1D], it is my opinion that Walton040 discloses [6D]. *See supra*, IX.B.4.

5. Element [6E]: the mobile station-specific transmission parameters indicate … a corresponding subchannel configuration

449. For similar reasons I explained above with respect to [1E], it is my opinion that Walton040 in view of Li017 discloses [6E]. *See supra*, IX.B.5.

6. Element [6F]: the antenna transmission scheme comprising a transmission diversity scheme or a multiple-input multiple-output (MIMO) scheme

450. For similar reasons I explained above with respect to [1F], it is my opinion that Walton040 discloses [6F]. *See supra*, IX.B.6.

7. Element [6G]: the corresponding subchannel configuration characterized by distributed subcarriers or localized subcarriers in the frequency domain

451. For similar reasons I explained above with respect to [1G], it is my opinion that Walton040 in view of Li017 discloses [8G]. *See supra*, IX.B.7.

8. Element [6H]: transmitting a data packet to the mobile station over the frequency subchannel in accordance with the mobile station-specific transmission parameters.

452. For similar reasons I explained above with respect to [1H], it is my opinion that Walton040 in view of Li017 discloses [6H]. *See supra*, IX.B.8.

D. Walton040 in view of Li017 renders obvious claim 8

453. Claim 8 is an independent claim that recites similar limitations to method claim 1 in the form of a method from the prospective of a "mobile station served by a base station." Thus for similar reasons as I discussed with respect to claims 1 and 6, and below, it is my opinion that each and every element of independent claim 8 was well-known in the art prior to the '941 patent, and that claim 8 would have been obvious over the art. *See supra* IX.B, IX.C.

1. Claim 8 Preamble (Element [8A]): A link adaptation method by a mobile station served by a serving base station in an Orthogonal Frequency Division Multiplexing (OFDM) communication system, the communication system utilizing a transmission structure with time slots in the time domain and frequency subchannels in the frequency domain, the method comprising:

454. For similar reasons I explained above with respect to [1A], it is my opinion that Walton040 discloses [8A]. *See supra*, IX.B.1.

455. In particular, Walton040 discloses a link adaptation method in an OFDM communication system having at least one mobile station (SS) served by a base station (BS). *See* EX1008, Abstract, ¶44.

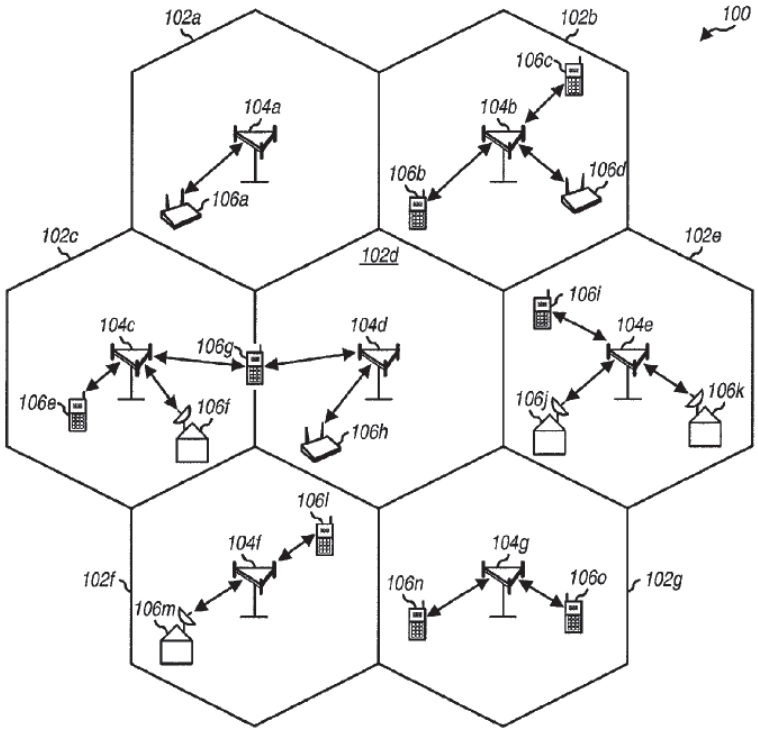

FIG. 1

EX1008, FIG. 1.

2. Element [8B]: receiving a control message from the serving base station over a control channel, wherein:

456. For similar reasons I explained above with respect to [1B], it is my opinion that Walton040 discloses [8B]. *See supra*, IX.B.2.

457. In particular, Walton040 discloses that the mobile station receives a control message from the serving base station over a control channel. *See* EX1008,

¶93 ("The pertinent information (e.g., schedule, data rate, coding and modulation scheme, transmit power, and so on) may be communicated to the affected terminals via a control channel on the downlink.")

3. Element [8C]: the control message contains transmission parameters specific to the mobile station for a subsequent transmission by the serving base station over a frequency subchannel to the mobile station in a time slot; and

458. For similar reasons I explained above with respect to [1C], it is my opinion that Walton040 discloses [8C]. *See supra*, IX.B.3.

4. Element [8D]: the mobile station-specific transmission parameters indicate an antenna transmission scheme

459. For similar reasons I explained above with respect to [1D], it is my opinion that Walton040 discloses [8D]. *See supra*, IX.B.4.

5. Element [8E]: the mobile station-specific transmission parameters indicate … a corresponding subchannel configuration

460. For similar reasons I explained above with respect to [1E], it is my opinion that Walton040 in view of Li017 discloses [8E]. *See supra*, IX.B.5.

6. Element [8F]: the antenna transmission scheme comprising a transmission diversity scheme or a multiple-input multiple-output (MIMO) scheme

461. For similar reasons I explained above with respect to [1F], it is my opinion that Walton040 discloses [8F]. *See supra*, IX.B.6.

7. Element [8G]: the corresponding subchannel configuration characterized by distributed subcarriers or localized subcarriers in the frequency domain

462. For similar reasons I explained above with respect to [1G], it is my opinion that Walton040 in view of Li017 discloses [8G]. *See supra*, IX.B.7.

8. Element [8H]: receiving a data packet transmitted by the serving base station using the mobile station-specific transmission parameters over the frequency subchannel.

463. For similar reasons I explained above with respect to [1H], it is my opinion that Walton040 in view of Li017 discloses [8H]. *See supra*, IX.B.8.

E. Walton040 in view of Li017 renders obvious claim 13

464. I note that Claim 13 is an independent claim that recites similar limitations to method claims 1 and 8 in the form of an apparatus claims—a "mobile station served by a base station." Thus, for similar reasons as I discussed with respect to claims 1 and 8, and below, it is my opinion that each and every element of independent claim 13 was well-known in the art prior to the '941 patent, and that claim 13 would have been obvious over the art. *See supra* IX.B, IX.D.

1. Claim 13 Preamble (Element [13A]): A mobile station served by a serving base station in an Orthogonal Frequency Division Multiplexing (OFDM) communication system, the communication system utilizing a transmission structure with time slots in the time domain and frequency subchannels in the frequency domain, the mobile station comprising a receiver configured to:

465. For similar reasons I explained above with respect to [1A] and [8A], it is my opinion that Walton040 discloses [13A]. *See supra*, IX.B.1, IX.D.1.

2. Element [13B]: receive a control message from the serving base station over a control channel, wherein:

466. For similar reasons I explained above with respect to [1B] and [8B], it is my opinion that Walton040 discloses [13B]. *See supra*, IX.B.2, IX.D.2.

3. Element [13C]: the control message contains transmission parameters specific to the mobile station for a subsequent transmission by the serving base station over a frequency subchannel to the mobile station in a time slot; and

467. For similar reasons I explained above with respect to [1C] and [8C], it is my opinion that Walton040 discloses [13C]. *See supra*, IX.B.3, IX.D.3.

4. Element [13D]: the mobile station-specific transmission parameters indicate an antenna transmission scheme

468. For similar reasons I explained above with respect to [1D] and [8D], it is my opinion that Walton040 discloses [13D]. *See supra*, IX.B.4, IX.D.4.

5. Element [13E]: the mobile station-specific transmission parameters indicate … a corresponding subchannel configuration

469. For similar reasons I explained above with respect to [1E] and [8E], it is my opinion that Walton040 in view of Li017 discloses [13E]. *See supra*, IX.B.5, IX.D.5.

6. Element [13F]: the antenna transmission scheme comprising a transmission diversity scheme or a multiple-input multiple-output (MIMO) scheme

470. For similar reasons I explained above with respect to [1F] and [8F], it is my opinion that Walton040 discloses [13F]. *See supra*, IX.B.6, IX.D.6.

7. Element [13G]: the corresponding subchannel configuration characterized by distributed subcarriers or localized subcarriers in the frequency domain

471. For similar reasons I explained above with respect to [1G] and [8G], it is my opinion that Walton040 in view of Li017 discloses [13D]. *See supra*, IX.B.7, IX.D.7.

8. Element [13H]: receive a data packet transmitted by the serving base station using the mobile station-specific transmission parameters over the frequency subchannel.

472. For similar reasons I explained above with respect to [1H] and [8H], it is my opinion that Walton040 in view of Li017 discloses [13H]. *See supra*, IX.B.8, IX.D.8.

F. Walton040 in view of Li017 renders obvious claim 3

473. Claim 3 depends from claim 1, and recites "wherein the mobile station-specific transmission parameters further indicate power control information." In my opinion, Walton040 discloses claim 3.

474. Walton040 explains that the system is designed to use power control and that in "allocating resources, the scheduling schemes may determine the minimum transmit power required to support a given data rate and operating mode. On the downlink, the power adjustment can be made on a per user basis. On the uplink this information may be conveyed to the terminals either explicitly or implicitly (e.g., by assigning a specific channel that has an understood maximum power limit associated with it)." EX1008, ¶427.

475. "On the downlink, the terminals may derive the SNR for each transmission channel and report downlink CSI to the base station via a reverse channel. **The base station would then use this information to schedule downlink transmission to the terminals, and to determine** the channel and antenna assignments, the operating mode, the data rate, and **the transmit power to be used.** … **The pertinent information (e.g.,** schedule, data rate, coding and modulation scheme, **transmit power**, and so on**) may be communicated to the affected terminals via a control channel on the downlink**." *Id*., ¶¶93 (emphasis added), 512.

476. I note that the '941 patent also admits that the use of power control information to adjust the transmission power in accordance with the state of a communication channel was known. For example, the Background of the 941 patent states that "[t]o improve performance, in addition to the MCS, other system functions such as …transmission power control (TPC) … can be adjusted in accordance with the state of the communication channel." EX1001, 1:44-48. Moreover, "[f]ast TPC can compensate for fast fading. In a multi-cell multiple-access system, TPC is also used to reduce intra-cell and inter-cell interference and to conserve battery life for the mobile station by transmitting with only necessary power. TPC is one of many functions in some wireless systems, along with MCS, pilot attributes, subchannel configuration, etc." *Id*., 1:64-2:3.

477. Therefore, Walton040 discloses "wherein the mobile station-specific transmission parameters further indicate power control information."

G. Walton040 in view of Li017 renders obvious claim 4

478. Claim 4 depends from claim 1, and recites "*wherein the antenna transmission scheme is based on a channel condition.*" In my opinion, Walton040 discloses claim 4.

479. As I noted above, Walton040 explains that the base station uses CSI "to schedule downlink transmission to the terminals, and to **determine the channel and antenna assignments**, the operating mode, the data rate, and the transmit power to be used." EX1008, ¶93 (emphasis added); *see also id.*, ¶82 ("**Scheduler 234 uses the reported downlink CSI to perform a number of functions such as** (1) selecting the best set of terminals for data transmission and (2) **assigning the available transmit antennas to the selected terminals**. Scheduler 234 or controller 230 further uses the reported downlink CSI to determine the coding and modulation scheme to be used for each transmit antenna**.** Scheduler 234 may schedule terminals to achieve high throughput and/or based on some other performance criteria or metrics, as described below.") (emphasis added), ¶482 ("[P]ost-processed SNRs corresponding to this set of terminals and their **antenna assignments** may be used to select the proper coding and modulation schemes for the data streams to be transmitted to the terminals. The schedule, antenna assignments, coding and

modulation schemes, other information, or any combination thereof, may be conveyed to the scheduled terminals (e.g., via a control channel), at step 928.") (emphasis added); *supra* IX.B.4.

480. Walton040, in particular, explains that the "flexibility in both selecting the best set of terminals for data transmission and assigning the transmit antennas to the selected terminals allows the scheduler to optimize performance by exploiting multi-user diversity environment" using SNRs for each terminal. EX1008, ¶¶469-470; *see also* EX1001, claims 1, 14.

481. Therefore, Walton040 discloses "wherein the antenna transmission scheme is based on a channel condition."

H. Walton040 in view of Li017 renders obvious claim 5

482. Claim 5 depends from claim 1, and recites "*wherein the corresponding subchannel configuration is selected based on a channel condition.*" In my opinion, Walton040 in view of Li017 discloses claim 5.

483. As I noted above, Walton040 in view of Li017 discloses the claimed "corresponding subchannel configuration." *See supra* IX.B.5.

484. As I also described above, it would have been obvious to a POSITA to modify Walton040 to select the corresponding subchannel configuration based on a channel condition in view of Li017. *See supra* IX.A. Indeed, Li017 specifically teaches that "[f]or downlink channels, each subscriber first measures the channel

and interference information for all the subcarriers and then selects multiple subcarriers with good performance (e.g., a high signal-to-interference plus noise ratio (SINR)) and feeds back the information on these candidate subcarriers to the base station. The feedback may comprise channel and interference information (e.g., signal-to-interference-plus-noise-ratio information) on all subcarriers or just a portion of subcarriers." EX1009, ¶26.

485. "Upon receiving the information from the subscriber, the base station further selects the subcarriers among the candidates, utilizing additional information available at the base station, e.g., the traffic load information on each subcarrier, amount of traffic requests queued at the base station for each frequency band, whether frequency bands are overused, and/or how long a subscriber has been waiting to send information." *Id.*, ¶27. This is illustrated in Figure 11:

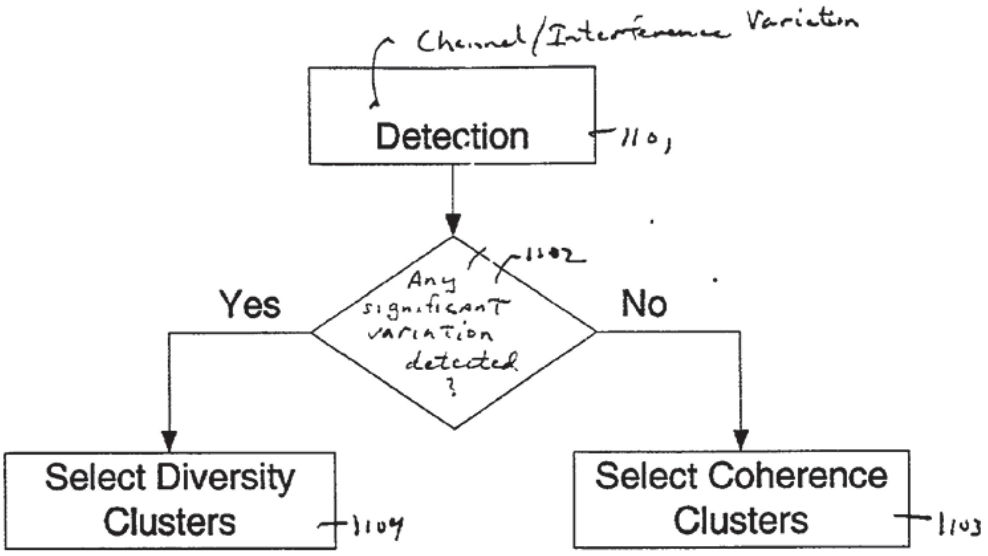

Figure 11

EX1009, FIG. 11.

486. "Referring to FIG. 11, processing logic in the base station performs channel/interference variation detection (processing block 1101). Processing logic then tests whether the results of the channel/interference variation detection indicate that the user is mobile or in a fixed position close to the edge of the cell (processing block 1102). If the user is not mobile or is not in a fixed position close to the edge of the cell, processing transitions to processing block 1103 where processing logic in the base station selects coherence clusters; otherwise, processing transitions to processing block 1104 in which processing logic in the base station selects diversity clusters." EX1009, ¶121.

487. As I described above, a POSITA would have been motivated to employ Li017's method for subcarrier allocation in the base station of 802.16a. When combined, 802.16a's base station would use the existing CSI to determine the mobility of the mobile station (fixed or mobile) and select the appropriate subchannel configuration (localized or distributed subcarriers) to achieve good performance. *See supra* IX.A.

488. Therefore, Walton040 in view of Li017 discloses "wherein the corresponding subchannel configuration is selected based on a channel condition."

I. Walton040 in view of Li017 renders obvious claim 7

489. Claim 7 depends from claim 6, and recites "further comprising a receiver configured to receive channel state information from the mobile station."

490. For similar reasons I explained above with respect to claims 5 and 6, it is my opinion that Walton040 in view of Li017 discloses claim 7. *See supra*, IX.H, IX.C.

J. Walton040 in view of Li017 renders obvious claim 10

491. Claim 9 depends from claim 8, and recites "wherein the mobile station-specific transmission parameters further indicate a training pilot pattern."

492. For similar reasons I explained above with respect to claim 3, it is my opinion that Walton040 discloses claim 11. *See supra*, IX.F.

K. Walton040 in view of Li017 renders obvious claim 11

493. Claim 9 depends from claim 8, and recites "wherein the mobile station-specific transmission parameters further indicate a training pilot pattern."

494. For similar reasons I explained above with respect to claim 4, it is my opinion that Walton040 discloses claim 11. *See supra*, IX.G.

L. Walton040 in view of Li017 renders obvious claim 12

495. Claim 9 depends from claim 8, and recites "wherein the mobile station-specific transmission parameters further indicate a training pilot pattern."

496. For similar reasons I explained above with respect to claim 5, it is my opinion that Walton040 in view of Li017 discloses claim 12. *See supra*, IX.H.

M. Walton040 in view of Li017 renders obvious claim 14

497. Claim 14 depends from claim 13, and recites "further comprising a transmitter configured to transmit channel state information to the serving base station."

498. For similar reasons I explained above with respect to claims 5-7, it is my opinion that Walton040 in view of Li017 discloses claim 14. *See supra*, IX.C, IX.H-I. In particular, Walton040 and Li017 both disclose the mobile station having a transmitter configured to transmit CSI to the base station. *See* EX1008, ¶¶11, 80-82, claim 1; EX1009, ¶¶44-47.

X. GROUND 3: Claims 2 and 9 are unpatentable under 35 U.S.C. § 103 as obvious over Walton040 in view of Li017 and Tufvesson

A. A POSITA would have been motivated to combine Walton040 and Li017 and Tufvesson

499. Walton040 explains that "Although not shown in FIG. 3A for simplicity, pilot data (e.g., data of a **known pattern**) may also be encoded and multiplexed with the processed information bits. The processed pilot data may be transmitted (e.g., in a time division multiplexed (TDM) or a code division multiplexed (CDM) manner) in all or a subset of the transmission channels used to transmit the information bits. The pilot data may be used at the receiver to perform channel estimation, frequency and timing estimation, coherent data demodulation, and so on." EX1008, ¶97.

500. "The channel coefficient matrix H may be derived, for example, from pilot data transmitted along with traffic data. In order to perform "optimal" reception and to estimate the SNR of the transmission channels, it is often convenient to insert known pilot data (e.g., a sequence of all ones) into the transmit data stream and to transmit the pilot data over one or more transmission channels. Methods for estimating a single transmission channel based on a pilot signal and/or a data transmission may be found in a number of papers available in the art. One such channel estimation method is described by F. Ling in a paper entitled "Optimal Reception, Performance Bound, and Cutoff-Rate Analysis of References-Assisted Coherent CDMA Communications with Applications," IEEE Transaction On Communication, October 1999. This or some other channel estimation techniques may be extended to matrix form to derive the channel coefficient matrix H." *Id.*, ¶177.

501. "The CSI may be derived based on the signals transmitted by the transmitter unit and received at the receiver unit. In an embodiment, the CSI is derived based on a pilot included in the transmitted signals. Alternatively or additionally, the CSI may be derived based on the data included in the transmitted signals." *Id.*, ¶316.

502. Li017 similar discloses that "Referring to FIG. 1B, each base station periodically broadcasts pilot OFDM symbols to every subscriber within its cell (or

sector) (processing block 101). The pilot symbols, often referred to as a sounding sequence or signal, are known to both the base station and the subscribers. In one embodiment, each pilot symbol covers the entire OFDM frequency bandwidth. The pilot symbols may be different for different cells (or sectors). The pilot symbols can serve multiple purposes: time and frequency synchronization, channel estimation and signal-to-interference/noise (SINR) ratio measurement for cluster allocation." EX1009, ¶43.

503. "Next, each subscriber continuously monitors the reception of the pilot symbols and measures the SINR and/or other parameters, including inter-cell interference and intra-cell traffic, of each cluster (processing block 102). Based on this information, each subscriber selects one or more clusters with good performance (e.g., high SINR and low traffic loading) relative to each other and feeds back the information on these candidate clusters to the base station through predefined uplink access channels (processing block 103). For example, SINR values higher than 10 dB may indicate good performance. Likewise, a cluster utilization factor less than 50% may be indicative of good performance. Each subscriber selects the clusters with relatively better performance than others. The selection results in each subscriber selecting clusters they would prefer to use based on the measured parameters." *Id.*, ¶44.

504. I note that while Walton040 and Li017 do not explicitly state that the mobile station-specific transmission parameters indicate a training pilot pattern, Walton040 and Li017 both explain that the pattern of the pilots to be used for CSI/channel estimation must be known to the mobile station/subscriber. EX1008, ¶97; EX1009, ¶43.

505. In my opinion, a POSITA would have thus looked to the prior art, like Tufvesson, for how to communicate the pilot pattern such that it is known to the mobile station. Tufvesson, like Walton040 and Li017, is directed to pilot assisted channel estimation for OFDM in mobile cellular systems. EX1010, 1639. Tufvesson also explained that the pilot pattern must be known to the mobile stations and is among the information transferred to a mobile station when it logs into a new cell, and once known is used for channel estimation. EX1010, 1639, 1641.

506. In particular, Tufvesson explains that the "mobile channel introduces multipath distortion of the signalling waveforms. Both the amplitude and phase are corrupted and the channel characteristics changes because of movements of the mobile. In order to perform coherent detection, reliable channel estimates are required. These can be obtained by occasionally transmitting known data or so called 'pilot symbols'. The receiver interpolates the channel information derived from the pilots to obtain the channel estimate for the data signal, see Fig. 1." *Id.*, 1639.

507. "To minimize the bit error rate it is desirable to spread the pilot symbols both in time and in frequency, as seen in Fig. 4 and Fig. 5. Normally a worst case design is made for the channel estimation system and then we suggest to tailor the pilot pattern to each base station site. A suitable pilot pattern can be calculated once the propagation environment and maximum expected speed in the particular cell is known." *Id.*, 1641.

508. In my opinion, a POSITA would have been motivated to modify Walton040 to include the training pilot pattern as part of the information communicated via the control channel to also indicate the forthcoming pilot pattern such that the mobile station may properly determine the SNR based on the teaching of Tufvesson. EX1010, ¶97; EX1008, ¶¶74, 93, 462, 482. Otherwise, the mobile station would not be able to properly measure the CSI because the location of the pilots would not be known.

509. In my opinion, a POSITA would have been further motivated to combine Walton040 and Tufvesson because both are in the same general field of mobile communications, and address the same problem—improving the performance of wireless communication systems. In particular, they are both directed to cellular communication systems using OFDM.

510. Lastly, a POSITA would have combined the system of Walton040 with the teachings of Tufvesson by known methods, and the results of the combination

would have been predictable to a POSITA (e.g., by providing the training pilot pattern in the information transmitted via the control channel). The proposed combination would also involve nothing more than incorporating a well-known concept (e.g., by providing the training pilot pattern in the information transmitted via the control channel) into a well-known system (e.g., Walton040's BS).

B. Walton040 in view of Li017 and Tufvesson renders obvious claim 2

511. Claim 2 depends from claim 1, and recites "*wherein the mobile station-specific transmission parameters further indicate a training pilot pattern.*" In my opinion, Walton040 in view of Li017 discloses claim 2.

512. As I noted above, Walton040 explains that "pilot data (e.g., **data of a known pattern**) may also be encoded and multiplexed with the processed information bits." EX1008, ¶97 (emphasis added); *see also id.*, ¶¶97, 177, 316. Li017 similarly discloses that "each base station periodically broadcasts pilot OFDM symbols to every subscriber within its cell (or sector) (processing block 101). **The pilot symbols, often referred to as a sounding sequence or signal, are known to both the base station and the subscribers.**" EX1009, ¶43 (emphasis added).

513. However, Walton040 and Li017 do not explicitly state that the mobile station-specific transmission parameters further indicate a training pilot pattern. Thus, as I discussed above, a POSITA would have been motivated to incorporate a training pilot pattern in the information transmitted via Walton040's control channel.

When combined, Walton040 would utilize Tufvesson's teachings such that the mobile station may identify and utilize subsequent pilot data to perform channel estimation, frequency and timing estimation, coherent data demodulation, etc. *See supra* X.A; EX1008, ¶97; EX1009, ¶43

514. Therefore, Walton040 in view of Li017 and Tusfvesson discloses "transmitting a data packet to the mobile station over the frequency subchannel in accordance with the mobile station-specific transmission parameters."

C. Walton040 in view of Li017 and Tufvesson renders obvious claim 9

515. Claim 9 depends from claim 8, and recites "wherein the mobile station-specific transmission parameters further indicate a training pilot pattern."

516. For similar reasons I explained above with respect to claim 2, it is my opinion that Walton040 in view of Li017 and Tufvesson discloses claim 9. *See supra*, X.B.

In signing this declaration, I recognize that the declaration will be filed as evidence in a contested case before the Patent Trial and Appeal Board of the United States Patent and Trademark Office. I also recognize that I may be subject to cross-examination in the case and that cross-examination will take place within the United States. If cross-examination is required of me, I will appear for cross-examination within the United States during the time allotted for cross-examination.

I hereby declare that all statements made herein of my own knowledge are true and that all statements made on information and belief are believed to be true; and further that these statements were made with the knowledge that willful false statements and the like so made are punishable by fine or imprisonment, or both, under Section 1001 of Title 18 of the United States Code.

Executed this 14th day of September, 2022.

Respectfully submitted,

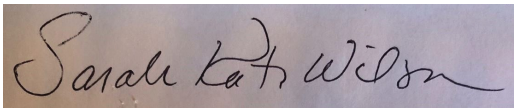

Sarah Kate Wilson, PhD.