IN THE UNITED STATES DISTRICT COURT
FOR THE EASTERN DISTRICT OF TEXAS
MARSHALL DIVISION

POLARIS POWERLED TECHNOLOGIES, LLC, Plaintiff, v. SAMSUNG ELECTRONICS AMERICA, INC., SAMSUNG ELECTRONICS CO., LTD., and SAMSUNG DISPLAY CO., LTD., Defendants.	§ § § § § § § § § § § § § §	Civil Action No. **JURY TRIAL DEMANDED**

COMPLAINT FOR PATENT INFRINGEMENT

Plaintiff Polaris PowerLED Technologies, LLC ("Polaris PowerLED") brings this patent infringement action against Defendants Samsung Electronics America, Inc. ("SEA"), Samsung Electronics Co., Ltd. ("SEC"), and Samsung Display Co., Ltd. ("SDC") (collectively "Samsung" or "Defendants") as follows:

NATURE OF THE ACTION

1. This is a civil action for infringement of U.S. Patent No. 7,259,521 ("the '521 patent"); U.S. Pat. No. 8,217,887 ("the '887 patent"); and U.S. Pat. No. 8,740,456 ("the '456 patent") (collectively, the "patents-in-suit") under the patent laws of the United States, 35 U.S.C. § 1 *et seq.*

2. Polaris PowerLED brings this patent infringement action to protect its valuable patented technology relating to (1) active matrix organic light emitting diode display systems, a significant advance in the field of display technology for devices such as smart phones; (2) devices and methods of controlling the intensity of light-emitting diodes in the backlights of

electronic displays, a significant advance in the field of electronic display technology for devices such as televisions; and (3) control circuits and methods of adjusting delivery of current in a connection based on temperature, a significant advance in the field of connections for portable devices such as smart phones.

THE PARTIES

3. Polaris PowerLED is a California limited liability company having its address at 32932 Pacific Coast Highway #14-498, Dana Point, California.

4. Defendant SEA is a New York corporation with its principal place of business located at 85 Challenger Road, Ridgefield Park, New Jersey 07660. SEA's registered agent is the CT Corporation System located at 28 Liberty St., New York, NY 100005.

5. Defendant SEC is a corporation organized and existing under the laws of the Republic of Korea with its principal place of business at 129 Samsung-ro, Maetan-3dong, Yeongton-gu, Suwon-si, Gyeonggi-do, 443-742, Republic of Korea. SEC may be served via its domestic entities or by process under the Hague convention.

6. Defendant SDC is a corporation organized and existing under the laws of the Republic of Korea with its principal place of business at 181, Samsung-ro, Tangjeong-Myeon, Asan-city, Chungcheongnam-Do, 336-741, Republic of Korea. SDC may be served via its domestic entities or by process under the Hague convention.

7. The claims of the patents-in-suit are infringed by various Samsung electronics products, including most, if not all, of its smart phones, including Smart Phones with Wireless Power Share (*See* https://www.samsung.com/us/support/answer/ANS00082564/), made and offered for sale in the United States, including for example, the Samsung S22 and the Samsung S21 Ultra, as well as most, if not all, of its televisions, made and offered for sale in the United

Samsung Display, Ex. 1005, p. 2

States, including for example, the Samsung QLED NEO 8k (collectively, "Accused Products"). Defendants SEA, SEC and SDC are related entities that work in concert to design, manufacture, import, distribute, offer to sell and/or sell these infringing devices.

JURISDICTION AND VENUE

8. This action arises under the patent laws of the United States, Title 35 of the United States Code. Accordingly, this Court has subject matter jurisdiction under 28 U.S.C. §§1331 and 1338(a) and the patent laws of the United States, 35 U.S.C. § 1, *et seq*.

9. The Court has personal jurisdiction over Defendants consistent with the Texas Long Arm Statute. This Court has personal jurisdiction over Defendants in this action because, among other reasons, Defendants have committed infringing acts within the Eastern District of Texas giving rise to this action and have established minimum contacts with the forum state of Texas. Defendants conduct business in this District and maintain a regular and established places of business within this District.

10. This Court has personal jurisdiction over Defendants because Defendants have committed and continue to commit acts of infringement in violation of 35 U.S.C. § 271 and place infringing products into the stream of commerce, with the knowledge or understanding that such products are sold in the State of Texas, including in this District. Samsung has purposefully availed itself of the privileges of conducting business in the State of Texas; Samsung regularly conducts business within the State of Texas, including at least by virtue of Samsung's infringing methods and apparatuses, which are, or were at least made, used, sold, and/or offered for sale in, the State of Texas. Further, this Court has general jurisdiction over Samsung, including due to its continuous and systematic contacts with the State of Texas. Further, on information and belief, Samsung is subject to the Court's jurisdiction, including because Samsung has committed

Samsung Display, Ex. 1005, p. 3

patent infringement in the State of Texas.

11. On information and belief, Samsung's business operations concerning smart phones and televisions are conducted at its facilities located in Richardson, Texas. Additionally, Samsung has committed infringing activities by marketing, selling, distributing, and servicing certain Samsung-branded smart phones and televisions which Plaintiff accuses of infringement in this Action.

12. Venue is proper in this judicial district pursuant to 28 U.S.C. §§ 1391(b), (c) and 1400(b). Defendant SEA maintains regular and established places of business, and a permanent and continuous physical presence within the District, including an office located at 1301 East Lookout Drive, Richardson, Texas 75080, which is located in Collin County and within this District, and 1000 Klein Rd., Plano, Texas 75074.

13. Defendants also employ full-time personnel, such as engineers and senior managers in this District, including in Richardson, Texas. On information and belief, Samsung's business operations relating to smart phones and televisions are conducted primarily at its facilities located in Richardson, Texas.

14. Defendant SEA has also committed acts of infringement in this District by commercializing, marketing, selling, distributing, and servicing certain Samsung-branded devices, including but not limited to smart phones and televisions, which are devices Plaintiff accuses of infringement in this Action.

15. Venue is proper against Defendants SEC and SDC, including pursuant to § 1391(c)(3), including because Defendants SEC and SDC are foreign corporations which are not a resident in the United States or any judicial district therein, including this District. Defendants SEC and SDC manufacture, import, offer to sell and/or sell smart phones and televisions in the

Samsung Display, Ex. 1005, p. 4

United States.

16. Further, on information and belief, Samsung is subject to the venue in this District, including because Samsung has committed patent infringement in this District. Pursuant to 35 U.S.C. § 271, Samsung infringes the patents-in-suit by the infringing acts described herein in this District. Further, Samsung solicits and induces customers/users in this District, including via its website at www.samsung.com. On information and belief, Samsung has customers/users who are residents of this District and who purchase, acquire, and/or use Samsung infringing products in this District.

PATENTS-IN-SUIT

17. Polaris PowerLED owns the entire right, title, and interest in U.S. Patent No. 7,259,521 titled "Video Driver Architecture for AMOLED Displays" ("the '521 patent"). The '521 patent issued on August 21, 2007 to inventor David W. Ritter from the U.S. Patent Application No. 11/467,738, filed on August 28, 2006. A true and correct copy of the '521 patent is attached as Exhibit A to this Complaint.

18. Polaris PowerLED owns the entire right, title, and interest in U.S. Patent No. 8,217,887 titled "System and Method for Backlight Control for an Electronic Display." The '887 patent issued on July 10, 2012 to inventors Dillip Sangam, Hendrik Santo, Tushar Khayagude, Kien Vi and Sean Chen from the U.S. Patent Application No. 12/018,399, filed on June 23, 2008. A true and correct copy of the '887 patent is attached as Exhibit B to this Complaint.

19. Polaris PowerLED owns the entire right, title, and interest in U.S. Patent No. 8,740,456 entitled "Adjusting Delivery of Current in a Connection Based on Temperature" (the '456 patent). The '456 patent issued on June 3, 2013 to inventors Morgan H. Monks, Kenneth W. Gay, and Timothy J. Knowlton from the U.S. Patent Application No. 13/109,446, filed on

Samsung Display, Ex. 1005, p. 5

May 17, 2011. A true and correct copy of the ’456 patent is attached as Exhibit C to this Complaint.

’521 PATENT BACKGROUND

20. Active matrix organic light emitting diode (AMOLED) displays are an emerging flat panel display technology. An AMOLED display panel contains many thousands of individual pixel drivers which provide current to energize the individual pixel OLEDs. These pixel drivers are programmed by a single current driver via a series of row and column decoders and switches such that, at any instant, only one pixel is connected to the current driver. The input to the current driver is the video drive signal.

21. The current provided by the current driver is proportional to the difference between the voltage level of the video drive signal and the positive power supply voltage of the display panel. Therefore, any variations in the power supply voltage will modulate the brightness of the AMOLED display. Power supply voltage variations that occur while a pixel is being programmed will be stored for an entire video frame. Since the power supply voltage variations are likely to be nonsynchronous with the video scan rate, the net result is flickers that can be observed on the display panel and that are objectionable to the viewer. The direct relationship between the drive current and the power supply voltage renders AMOLED displays extremely sensitive to power supply voltage noise. It also makes the AMOLED display's overall brightness extremely dependent on the absolute voltage of the power supply voltage. Thus, the brightness level of an AMOLED display will tend to drift with power supply voltage variations. Both of these effects are undesirable.

22. There are many sources of power supply voltage variations that can cause flickering in AMOLED displays. Sensitivity to these power supply voltage variations in

Samsung Display, Ex. 1005, p. 6

AMOLED displays results in poor display quality.

23. David Ritter invented a novel video driver for AMOLED displays that is capable of isolating the pixel circuit from power supply voltage variations. His invention was a significant advance in the field of display technology, helping prevent flickering in display panels.

24. David Ritter patented this invention in the ’521 patent.

‘887 PATENT BACKGROUND

25. Backlights are used to illuminate thick and thin film displays including liquid crystal displays (“LCDs”). LCDs with backlights are used in small displays for cell phones and personal digital assistants, as well as in large displays for computer monitors and televisions.

26. To control the intensity of the light emitting diode (“LED”) backlight, pulse-width modulation is often used. Pulse-width modulation does not provide a continuous voltage to the LED to provide a continuous output of a certain intensity of light. Instead, pulse-width modulation alternates between a high voltage that causes the emission of bright light and a low voltage that does not cause the emission of light.

27. In pulse-width modulation, the LED switches quickly enough that the human eye does not perceive the on and off states, but instead perceives an intensity of light that depends on the duration of the on state. The adjustments to the backlighting are made independently of the images being displayed by the pixel circuitry.

28. In video production, animation, and related fields, a frame is one of the many still images which compose the complete moving picture. Prior to the development of digital video technology, frames were recorded on a long strip of photographic film, and each image looked rather like a framed picture when examined individually, hence the name. When the moving

Samsung Display, Ex. 1005, p. 7

picture is displayed, each frame is flashed on a screen for a short time (usually 1/24th, 1/25th or 1/30th of a second) and then immediately replaced by the next one. Persistence of vision blends the frames together, producing the illusion of a moving image. The video frame is also sometimes used as a unit of time, being variously 1/24, 1/25 or 1/30 of a second, so that a momentary event might be said to last 6 frames. The frame rate, meaning the rate at which sequential frames are presented, varies according to the video standard in use.

29. This frame-by-frame backlight control of the prior art, in which the backlight is adjusted only once for each frame, has several deficiencies. For example, when a very dark image immediately follows a bright image, the frame-by-frame control technique can result in undesired visual artifacts. Similarly, for the frame in which one portion of the displayed image is bright and another portion is dark, the frame-by-frame control technique can result in undesired visual artifacts.

30. Dilip Sangam, Hendrik Santo, Tushar Dhayagude, Klen Vi, and Sean Chen invented a novel display image technology that overcame these deficiencies and controlled the intensity of LEDs in the backlights of electronic displays. This invention represented a significant advance in improving display image technology in televisions. The features of this invention provide for an enhanced contrast ratio for the display, the removal or reduction of visual artifacts, and the flexibility to selectively emphasize and deemphasize colors based on the ambient lighting conditions.

31. Dilip Sangam, Hendrik Santo, Tushar Dhayagude, Klen Vi, and Sean Chen patented this invention in the ’887 patent.

’456 PATENT BACKGROUND

32. In recent years, there has been a proliferation of portable devices that connect to

Samsung Display, Ex. 1005, p. 8

host devices for receiving power (such as for charging a battery) and data (such as for syncing files from the host device). Typically, the portable device and host device are connected via a physical connection, such as a wire or cable.

33. Many device manufacturers have increased the amount of current and/or power delivered to these portable devices for various reasons, including to provide a faster battery recharge for the portable device. However, the increase in current causes an increase in temperature in the connections, and may result in catastrophic failure in the connection, in the portable device, and/or in the host device. Current specifications may specify a maximum volt-ampere (VA) level, such as "25 VA per connector." Unfortunately, this limit neglects the fact that heating is caused by I^2R effects. Additionally, since most connections are manufactured by many different manufacturers, there is no guarantee that a particular cable and connector combination can transfer power without overheating. Accordingly, improvements in connections are desired.

34. Morgan Monks, Kenneth Gay, and Timothy Knowlton invented a method and device for adjusting delivery of current via a connection, such as a wired or wireless connection, based on temperature in electronics products, such as smart phones. This invention represented a significant advance. With this invention, a change in temperature of a connection between a first device and a second device may be measured. The change in temperature may be performed while the first device provides current to the second device via the connection. If the change in temperature is above a threshold, the current being provided from the first device to the second device may be reduced. The change in temperature may be performed by the first device and/or the second device, for example, by measuring the temperature of a connector of the connection.

35. Morgan Monks, Kenneth Gay, and Timothy Knowlton patented this invention in

Samsung Display, Ex. 1005, p. 9

the ’456 patent.

COUNT I
(INFRINGEMENT OF U.S. PATENT NO. 7,259,521)

36. Polaris PowerLED incorporates by reference paragraphs 1-35 above.

37. Samsung has directly infringed and continues to directly infringe the ’521 patent by making, using, offering for sale, selling, and/or importing into the United States smartphones, including, for example, the Samsung S22, and other Samsung smartphones.

38. Claim 1 of the ’521 patent, for example, reads as follows:

> 1. An active matrix organic light emitting diode (AMOLED) display system comprising an AMOLED display panel receiving a video signal to be displayed on the AMOLED display panel, the AMOLED display panel comprising a plurality of organic light emitting diode (OLED) pixel elements, the AMOLED display system comprising: a video driver receiving the video signal and generating a video drive signal indicative of the video signal and referenced to a positive power supply voltage of the AMOLED display panel; and
>
> a current driver coupled to at least one OLED pixel element, the current driver receiving the video drive signal and the positive power supply voltage and providing a drive current to the at least one OLED pixel element, the drive current being proportional to a current drive voltage being indicative of the video signal and independent of the positive power supply voltage.

39. Samsung has directly infringed, and continues to directly infringe, one or more claims of the ’521 patent, including at least claim 1 of the ’521 patent, literally and/or under the doctrine of equivalents, by or through making, using, offering for sale, selling within the United States and/or importing the Accused Products.

40. To the extent the preamble is limiting, the Samsung S22, for example, has, “[a]n active matrix organic light emitting diode (AMOLED) display system comprising an AMOLED display panel receiving a video signal to be displayed on the AMOLED display panel, the AMOLED display panel comprising a plurality of organic light emitting diode (OLED) pixel elements.” S22 devices using AMOLED displays are shown below, along with information

Samsung Display, Ex. 1005, p. 10

concerning their displays and size:

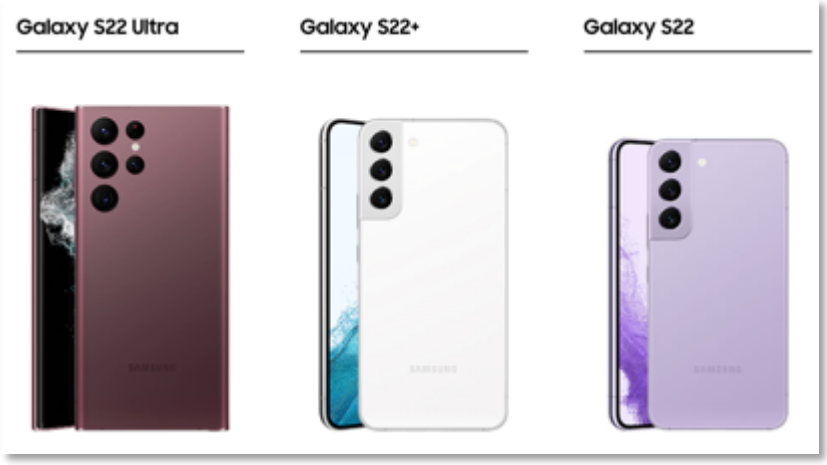

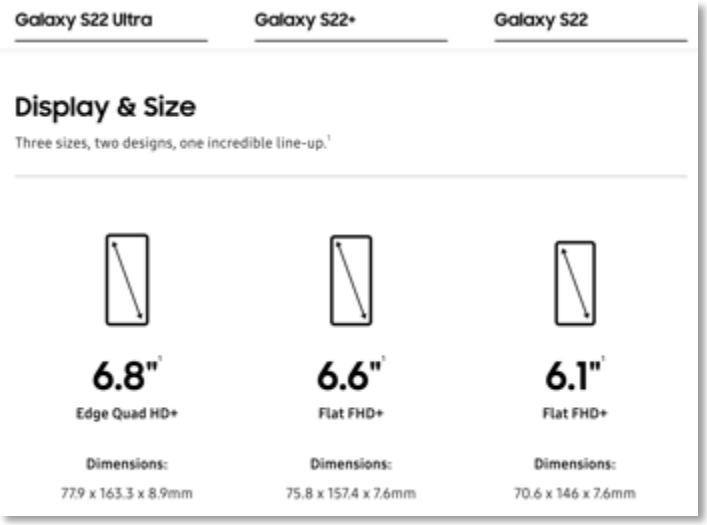

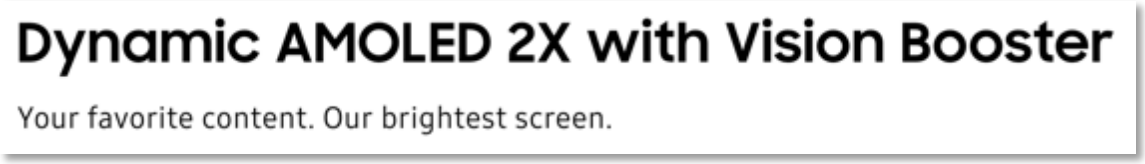

Available at: https://www.samsung.com/us/smartphones/galaxy-s22/models/

Furthermore, the S22 AMOLED display includes an array of OLED pixels:

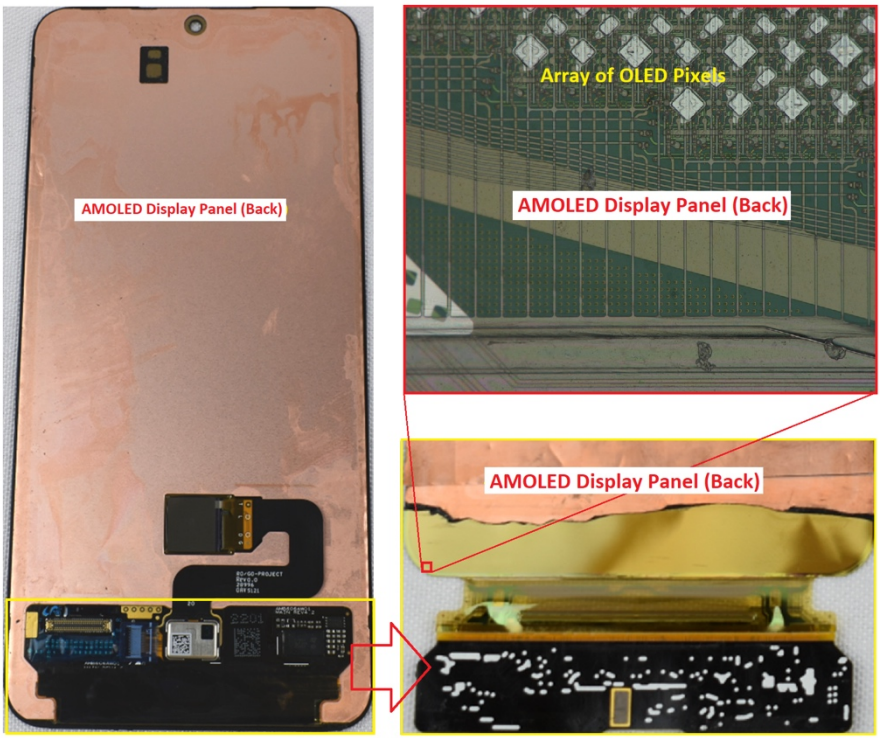

41. The Samsung S22 has "a video driver receiving the video signal and generating a video drive signal indicative of the video signal and referenced to a positive power supply voltage of the AMOLED display panel." An S22 device includes a video driver Digital Display Interface ("DDI") die which receives the digital video signal and generates inverted video current drive signals to the AMOLED display panel. The inverted video drive signal is generated by a digital to analog converter ("D/A converter") on the DDI die based on the digital video signal and output as the difference between the power supply of the DDI die DDI_VDD and the video signal. The DDI Driver is shown below:

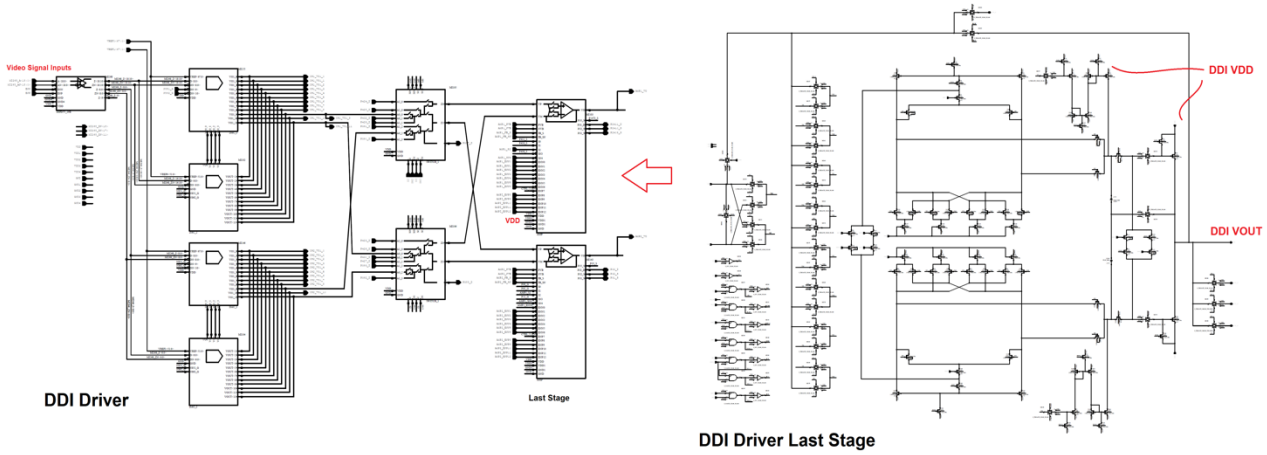

42. Both the power supplies of the DDI die and the AMOLED display array are sourced from a single supply voltage on a Silicon Mitus SM3010 Display PMIC. Simplified S22 OLED /Driving Circuits and the S22 AMOLED Display Construction are shown below:

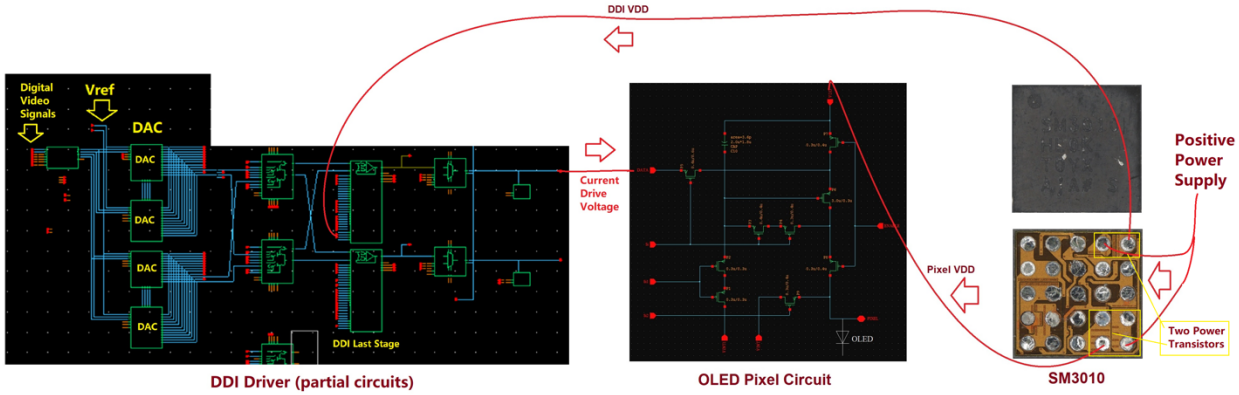

Simplified S22 OLED Driving Circuits

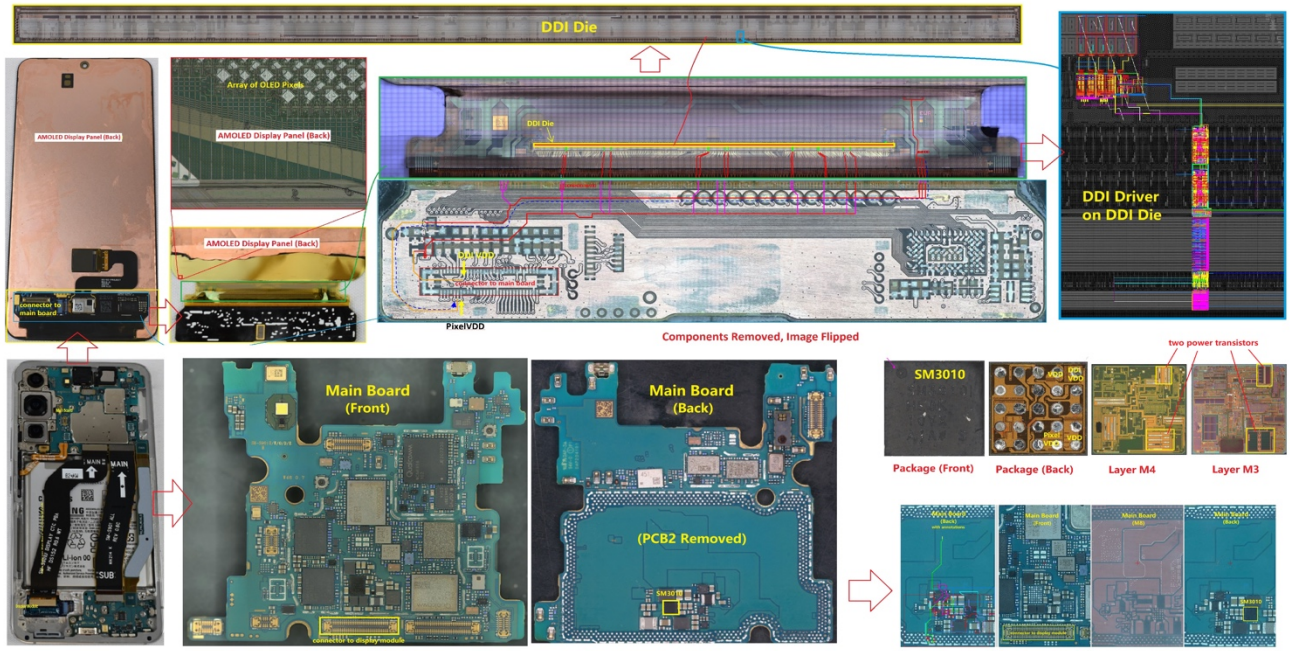

S22 AMOLED Display Construction

43. The Samsung S22 has "a current driver coupled to at least one OLED pixel element, the current driver receiving the video drive signal and the positive power supply voltage and providing a drive current to the at least one OLED pixel element." Each pixel on the display panel of the S22 device includes a p-channel metal-oxide semiconductor ("PMOS") transistor as the current driver. The drain of the PMOS transistor is coupled to an OLED element during the video input signal (program) phase. The gate of the PMOS transistor receives the inverted video drive signal and stores it in a capacitor, referenced to the positive power supply Pixel_VDD. During the light emission phase, the source of the PMOS transistor is coupled to the positive power supply voltage Pixel_VDD. With the capacitor clamping the gate and source of the PMOS transistor to the inverted video drive voltage and the positive power supply voltage, the drain of the PMOS transistor outputs a constant drive current to the OLED pixel element, as shown below:

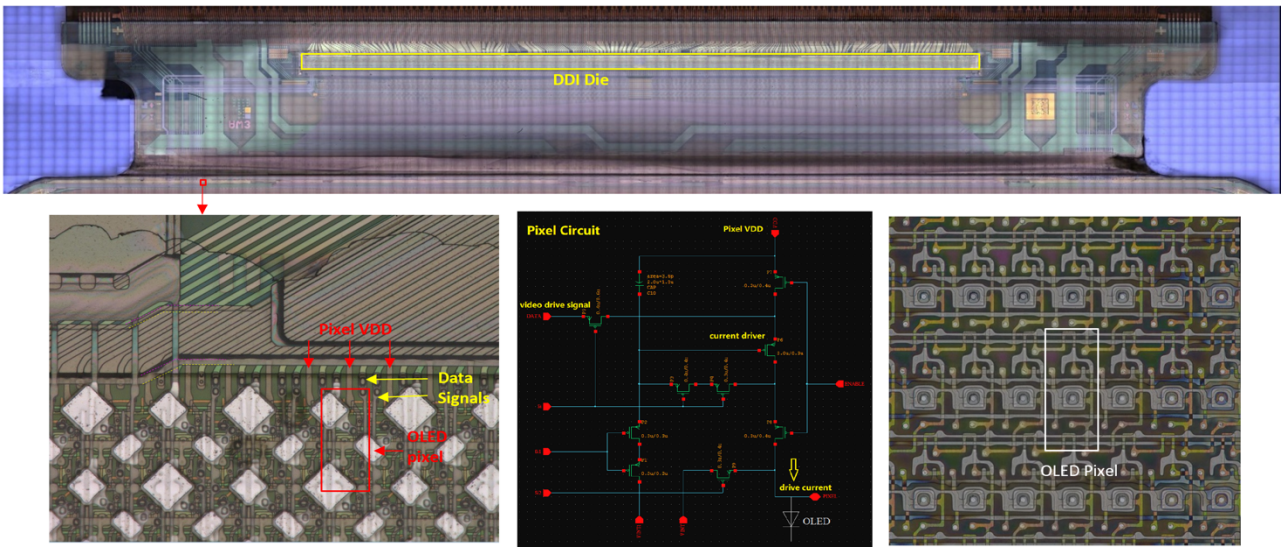

44. The Samsung S22 has "the drive current being proportional to a current drive voltage being indicative of the video signal and independent of the positive power supply voltage." For example, during the light emission phase, the OLED drive current, outputting from the drain of the PMOS transistor, increases or decreases in accordance with the increase or decrease of the current drive voltage applied to its source and gate. The threshold voltage of the PMOS transistor can be compensated by the different voltage between the pixel power supply and the DDI power supply. The current drive voltage, output from the last stage of the DDI driver, is generated by the D/A converter based on the digital video signal. Because both the DDI_VDD and the Pixel_VDD are referenced to the same positive power supply, any voltage fluctuations on the two power supplies will be canceled and will not impact the brightness of the OLED element. In addition, the capacitor holds the source and gate voltage of the PMOS transistor consistent during the light emission phase, and the OLED drive current from the drain of the PMOS transistors is also consistent and independent of any voltage fluctuations of the positive power supply voltage of the display module. Simplified S22 OLED driving circuits are shown below:

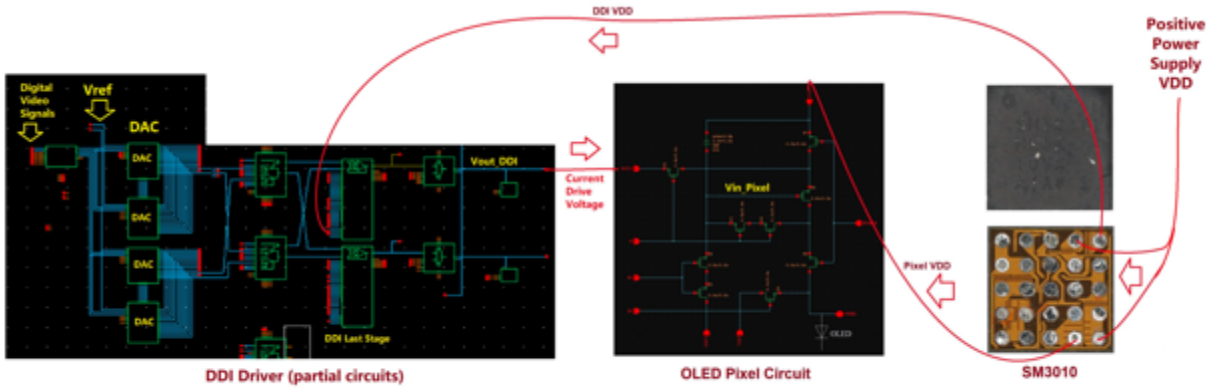

Simplified S22 OLED Driving Circuits

45. Samsung has infringed, and continues to infringe, the claims of the ’521 patent in the United States, by making, using, offering for sale, selling, and/or importing the Accused Products in violation of 35 U.S.C. § 271(a).

46. Samsung also has infringed, and continues to infringe the claims of the ’521 patent by actively inducing others to use the Accused Products. Samsung’s users, customers, agents or other third parties who use the Accused Products in accordance with Samsung’s instructions infringe the claims of the ’521 patent, in violation of 35 U.S.C. § 271(a). Samsung intentionally instructs its customers to infringe through support information, the Samsung automated Virtual Assistant, demonstrations, brochures, videos, and user guides, such as those located at: https://www.samsung.com/us/support/; https://www.samsung.com/us/support/remoteservice/; https://www.youtube.com/user/samsungspstv ; https://www.youtube.com/watch?v=qG5_RMQP6XI; https://www.youtube.com/channel/UCnEdfCdbxJJ9ouWKLSRCRRw; and https://www.youtube.com/channel/UCWwgaK7x0_FR1goeSRazfsQ . Samsung is thereby liable for infringement of the ’521 patent under 35 U.S.C. § 271 (b).

47. Samsung is liable as a contributory infringer of the ’521 patent under 35 U.S.C. § 271(c) by having offered to sell, sold and imported and continuing to offer to sell, selling, and importing into the United States the Samsung S22, and other Samsung smartphones with AMOLED display systems, to be especially made or adapted for use in an infringement of the ’521 patent. The AMOLED display system is a material component for use in practicing the ’521 patent and is specifically made and is not a staple article of commerce suitable for substantial noninfringing use.

48. As a result of Samsung’s infringement of the ’521 patent, Polaris PowerLED has suffered monetary damages and is entitled to no less than a reasonable royalty for Samsung’s use of the claimed inventions of the ’521 patent, together with interest and costs as determined by the Court. Polaris PowerLED will continue to suffer damages in the future.

49. The ’521 patent was cited during prosecution of patent application US20110279444A1, assigned to Samsung Mobile Display Co., Ltd., providing notice to Samsung of the ’521 patent.

50. Samsung is on notice of its infringement by no later than the filing and service of this Complaint. By the time of trial, Samsung will have known and intended (since receiving such notice) that its continued actions would actively induce and/or contribute to the infringement of the ’521 patent.

51. Samsung’s acts of direct and indirect infringement have caused and continue to cause damage to Polaris PowerLED. Polaris PowerLED is entitled to damages in accordance with 35 U.S.C. §§ 271, 281, and 284 sustained as a result of Samsung’s wrongful acts in an amount to be proven at trial.

COUNT II
(INFRINGEMENT OF U.S. PATENT NO. 8,217,887)

Samsung Display, Ex. 1005, p. 17

52. Polaris PowerLED incorporates by reference paragraphs 1-51 above.

53. Samsung has directly infringed and continues to directly infringe the ’887 patent by making, using, offering for sale, selling, and/or importing into the United States televisions with backlight controls, including, for example, the Samsung QLED NEO 8k.

54. Claim 1 of the ’887 patent, for example, reads as follows:

1. A control circuit for an electronic display comprising:

   a first circuitry for controlling luminosity levels of a plurality of strings of light emitting diodes (LEDs);

   a second circuitry for controlling a plurality of pixels for displaying a plurality of image frames of a video;

   the second circuitry for displaying each image frame of the plurality of image frames for a predetermined period of time, the second circuitry configured to change a displayed image frame once every cycle of a first clock signal having a first frequency; and

   the first circuitry for adjusting the luminosity levels of the plurality of strings of LEDs for a plurality of times within the predetermined period of time, the first circuitry configured to adjust the luminosity levels according to a second clock signal having a second frequency that is a multiple of the first frequency and is higher than the first frequency.

55. Samsung has directly infringed, and continues to directly infringe, one or more claims of the ’887 patent, including at least claim 1 of the ’887 patent, literally and/or under the doctrine of equivalents, by or through making, using, offering for sale, selling within the United States and/or importing the Accused Products.

56. To the extent the preamble is limiting, the Samsung QLED NEO 8k, for example, has “a control circuit for an electronic display.” A picture of Samsung QLED NEO 8k, with the back panel removed to show its control circuit, is shown below:

Samsung Display, Ex. 1005, p. 18

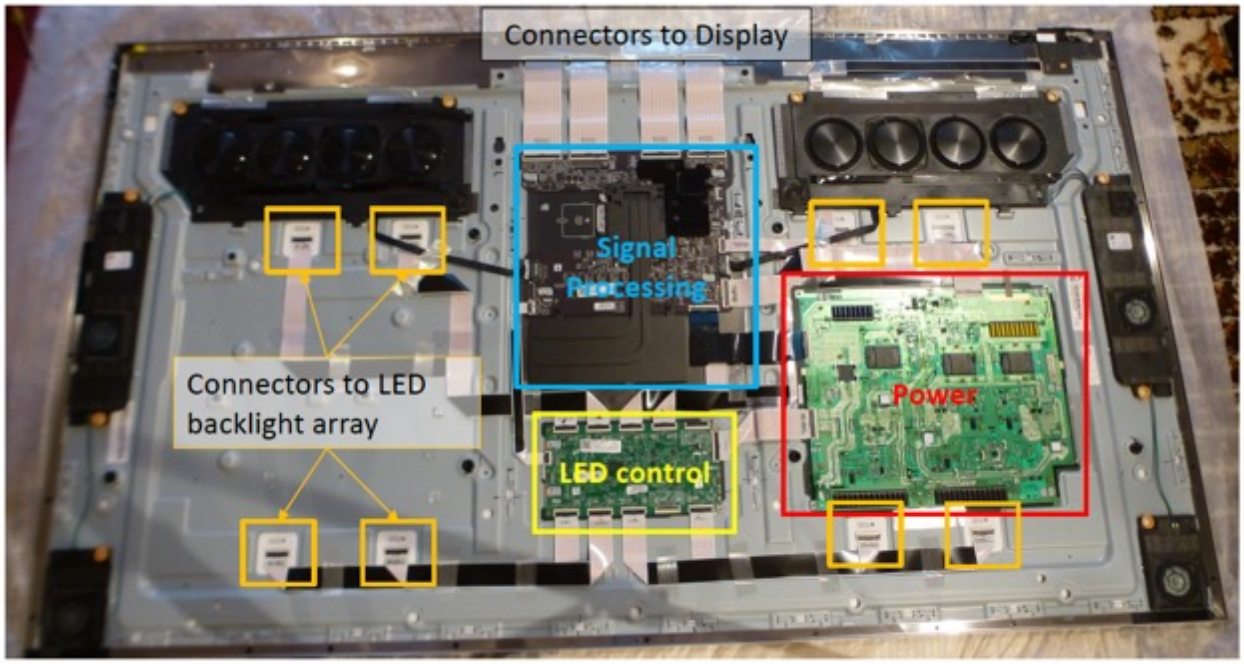

Back panel of TV removed

57. The Samsung QLED NEO 8k has "a first circuitry for controlling luminosity levels of a plurality of strings of light emitting diodes (LEDs)." For example, a set of 8 ribbon cables carry LED backlight control signals to the backlight array, made up of 8 panels. The Samsung QLED NEO 8k has a field programmable gate array ("FPGA"), in particular a Spartan-7 FPGA. *See* https://www.xilinx.com/products/silicon-devices/fpga/spartan-7.html . One of the applications of the Spartan-7 FPGA is for controlling pulse-width modulation signals of an LED lighting system. The LED panel contains individual LEDs that are arranged in rows and connected in a set of strings.

58. The LED panel and the FPGA are shown below:

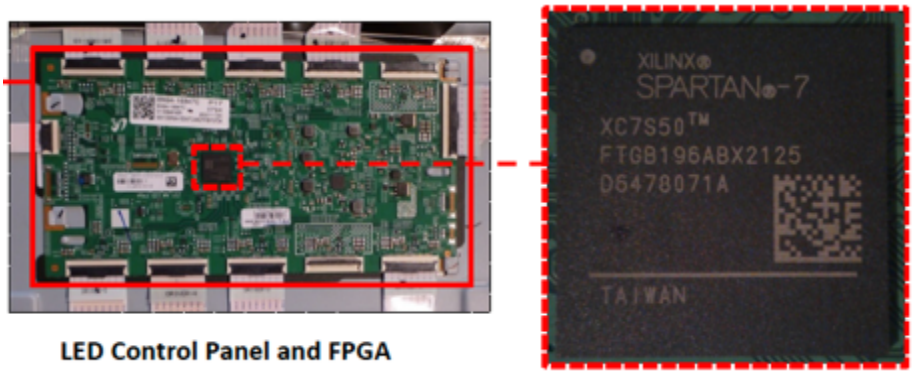

LED Control Panel and FPGA

Source: https://www.xilinx.com/products/silicon-devices/fpga/spartan-7.html

59. The annotated image of an LED array below shows an LED string connection path:

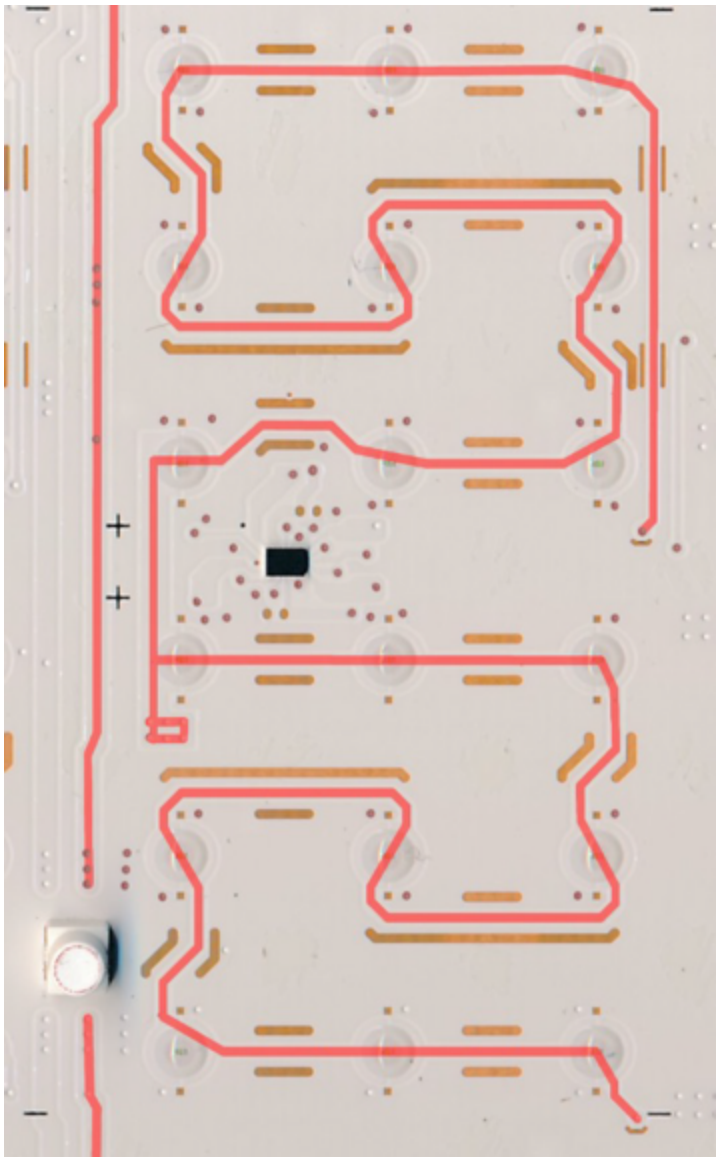

60. The Samsung QLED NEO 8k has "a second circuitry for controlling a plurality of pixels for displaying a plurality of image frames of a video." For example, the Neo Quantum Processor 8K, found in the Samsung QLED NEO 8k, has an "algorithm that will analyze images and tailor to the restoration of details of each pixel." *See* https://www.samsung.com/ca/tvs/qled-tv/qn900a-65-inch-neo-qled-8k-smart-tv-qn65qn900afxzc/. A photo of a board with a Samsung Quantum Processor 8K is shown below:

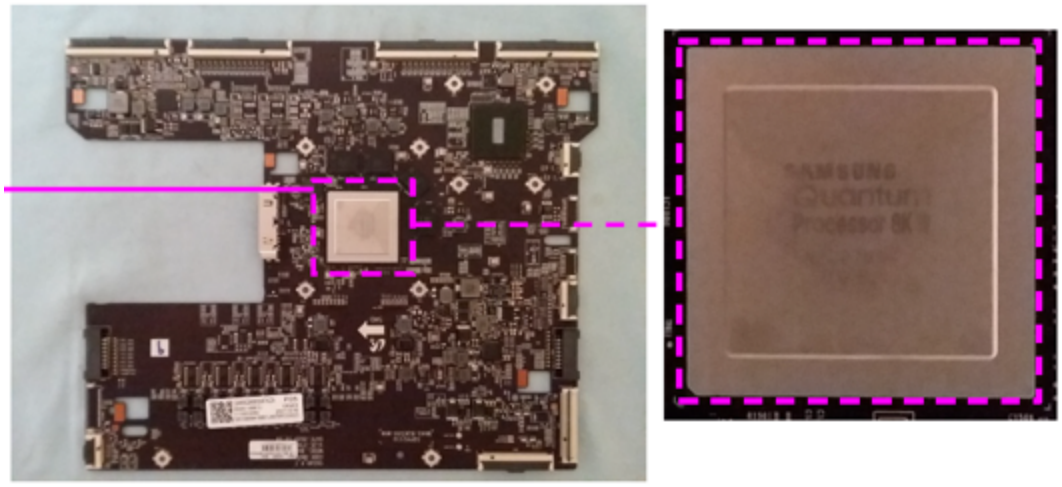

Photo of board with Samsung Quantum Processor 8K.

Source: https://www.samsung.com/ca/tvs/qled-tv/qn900a-65-inch-neo-qled-8k-smart-tv-qn65qn900afxzc/

Turn what you watch into 8K

8K AI Upscaling

Witness the quantum leap in 8K AI Upscaling performance by combining deep learning algorithms to the Neo Quantum Processor 8K. The on-device deep learning algorithm will analyze images and tailor to the restoration of details of each pixel.

61. The Samsung Quantum Processor 8K uses Digital Natural Image Engine technology, a set of four advanced image processing technologies that makes digital TVs, including various types of displays, produce images. *See* https://www.samsung.com/in/support/computing/what-is-dnie-technology/. A photo of the pixel colors when backlit is shown below:

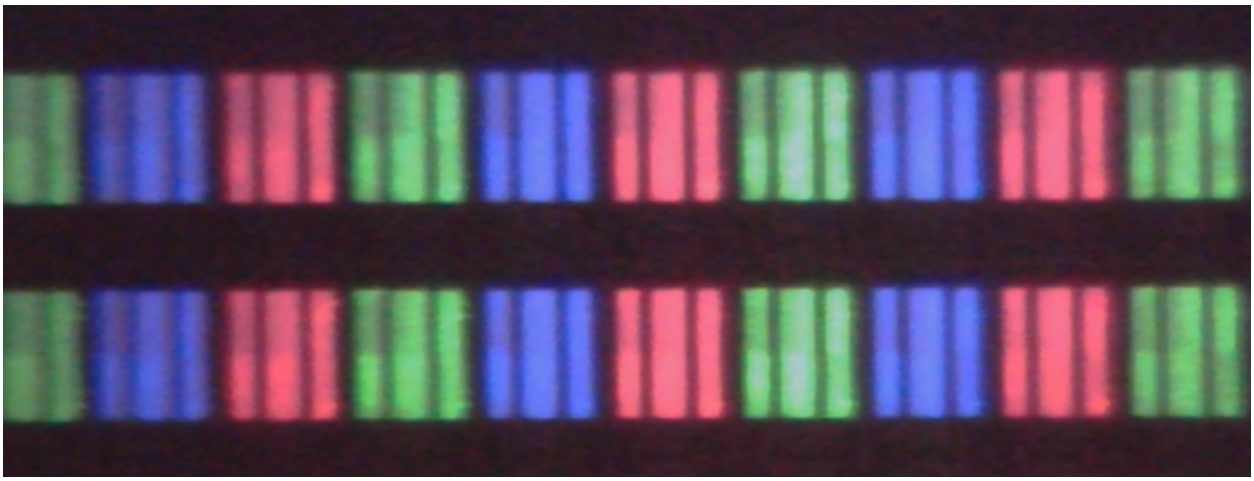

62. The Samsung QLED NEO 8k has "second circuitry for displaying each image frame of the plurality of image frames for a predetermined period of time." For example, below, the signal shows an 8k resolution at 59 Hz. At 59 Hz the television displays a new frame, or image, of video every 1/59 of a second, or about 17 milliseconds.

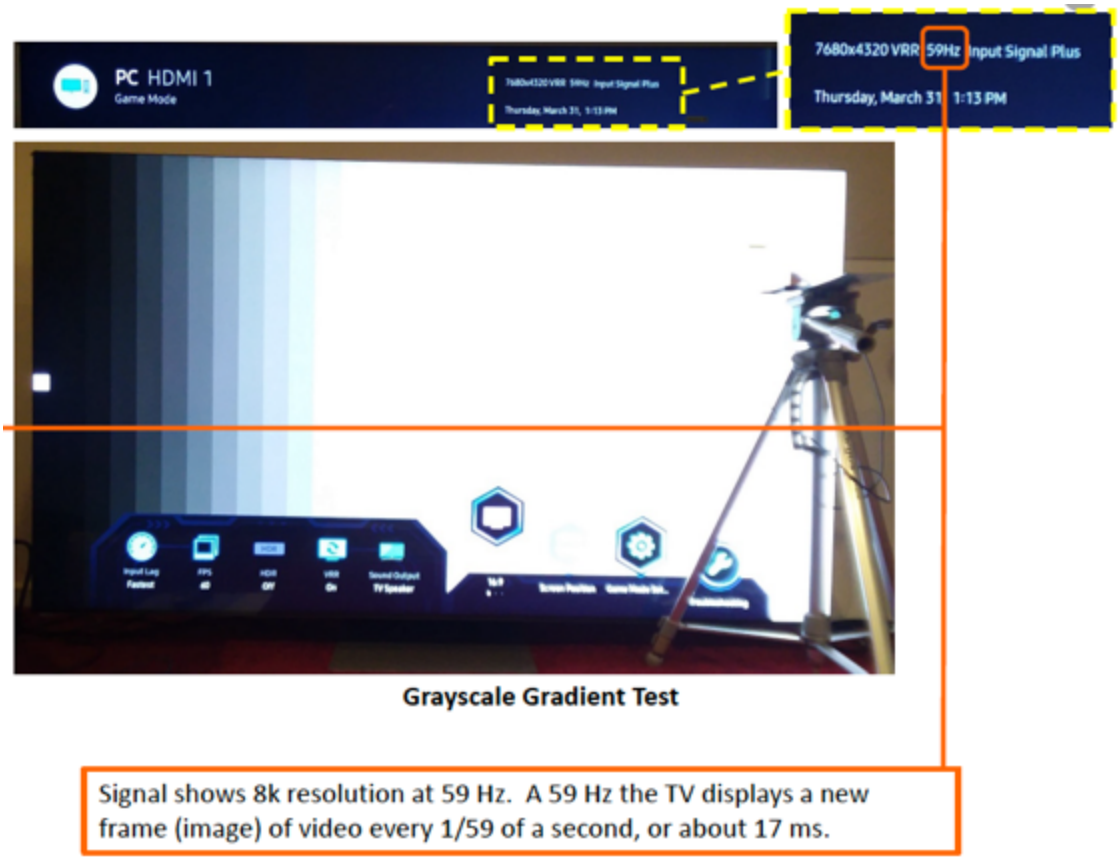

63. The Samsung QLED NEO 8k has "second circuitry configured to change a displayed image frame once every cycle of a first clock signal having a first frequency." For example, with "Variable Refresh Rate" enabled and the input resolution at 8k (7860 x 4320), the display refreshes at 60 Hz:

Supported Resolutions for FreeSync (VRR)

Check the supported resolutions for the FreeSync (VRR) signal.

When Game Mode is set to On or Auto, the FreeSync (VRR) function is activated.

- FreeSync (VRR) is supported only in the following models:
  - For QLED TV (except for Q6*A/Q5*A series and 50Q8*A, 43QN9*A model)
  - For AU9 Series (supported only 1920 x 1080 resolution)
  - For The Frame (55LS03A, 65LS03A, 75LS03A)

Resolution (Dots x lines)	Display format	Horizontal frequency (KHz)	Vertical frequency (Hz)	Clock frequency (MHz)	SCAN
1920 x 1080	120 Hz	135.000	120.000	297.000	progressive
2560 x 1440	120 Hz	150.000	120.000	495.000	progressive
3840 x 2160	120 Hz	270.000	120.000	1188.000	progressive
4096 x 2160	120 Hz	270.000	120.000	1188.000	progressive
* 7680 x 4320	60 Hz	264.000	60.000	2376.000	progressive

*: The resolution may not be supported depending on the model.

Source: OSNATSCA-6.0.0_EM_OSCAR_USA_ENG_210608.0.pdf - page 152.

64. The Samsung QLED NEO 8k has "first circuitry for adjusting the luminosity levels of the plurality of strings of LEDs for a plurality of times within the predetermined period of time." For example, a waveform of light intensity of greyscale image at 8k resolution and 59 Hz is shown. The screen refreshes every 1/59th seconds (about 17 milliseconds) and the pulse-width modulation pulses occur 1.04 milliseconds apart, or at a frequency of 962 Hz:

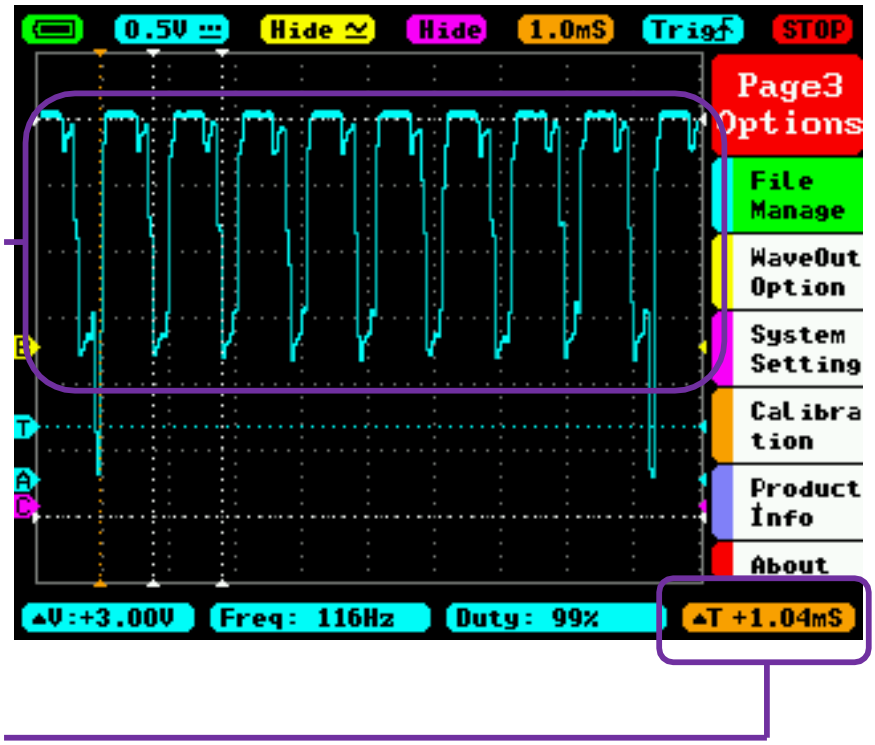

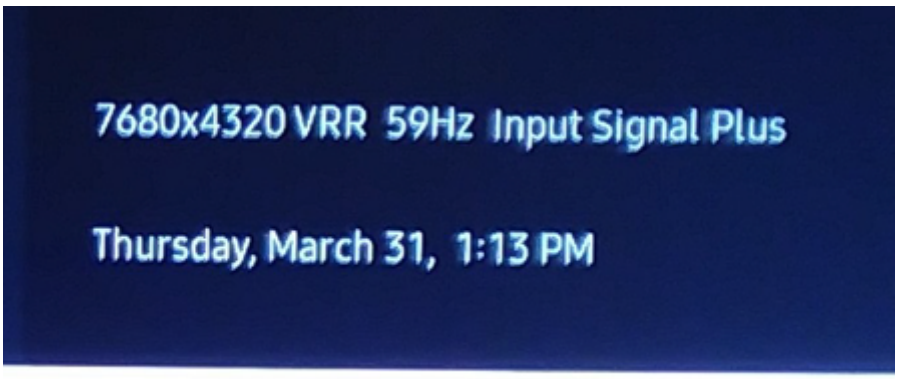

65. The adjustment of luminosity levels occurs within a predetermined period of time. Shown below are the output of the TV screen, with luminosity waveforms of a greyscale image at 8k resolution and 59 Hz. Measuring darker bands on the screen show lower intensities. A desired intensity level is achieved with the use of pulse-width modulation signals, with the intensity level being dependent on the width of the signals:

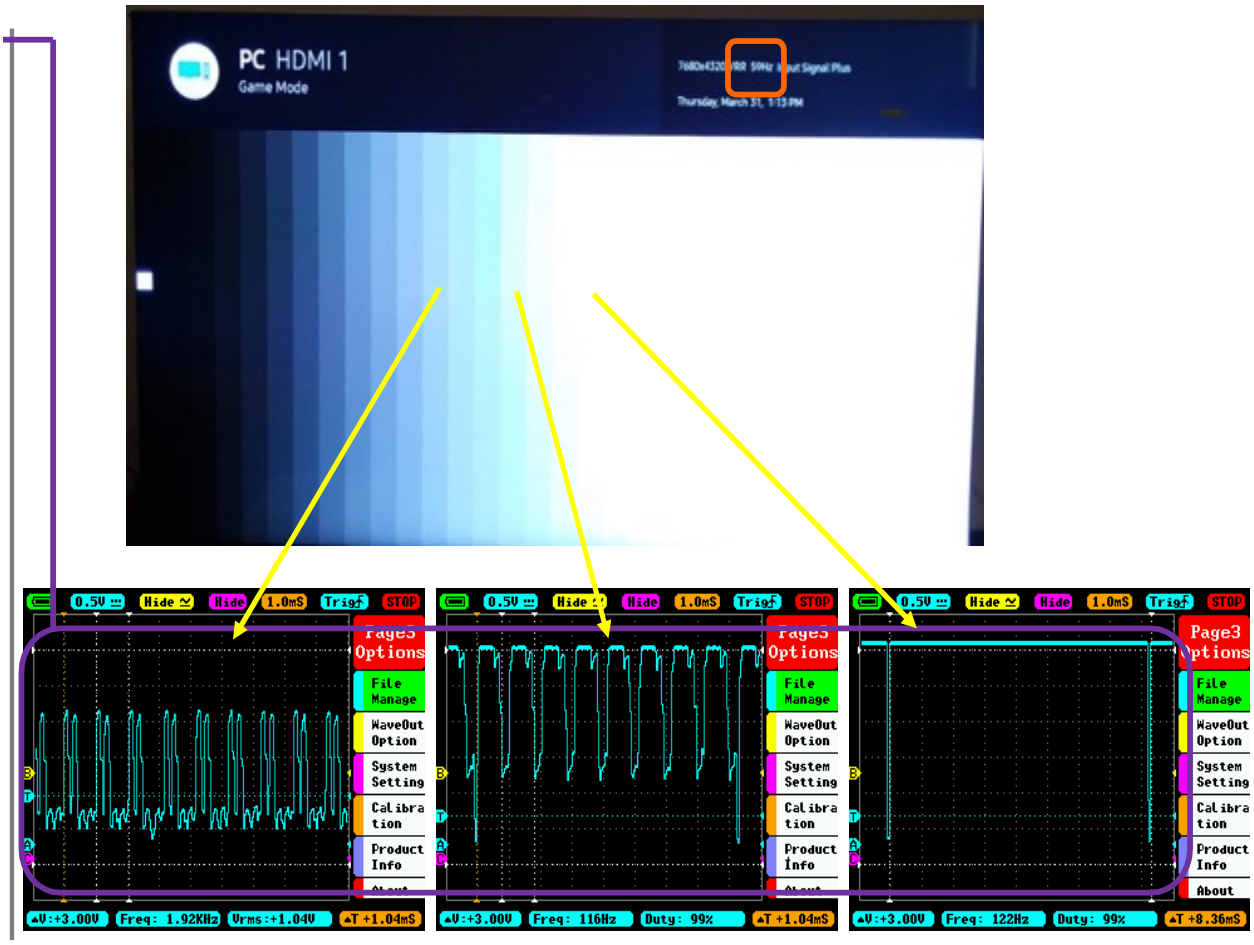

66. The Samsung QLED NEO 8k has "the first circuitry configured to adjust the luminosity levels according to a second clock signal having a second frequency that is a multiple of the first frequency and is higher than the first frequency." For example, below, the period of the pulse-width modulation pulses is measured to be 1.04 ms, which corresponds to a frequency of approximately 962 Hz. The display refresh rate is shown to be 59 Hz, meaning the second frequency is at approximately 16 times the first frequency (962 divided by 59, a multiple of the first frequency):

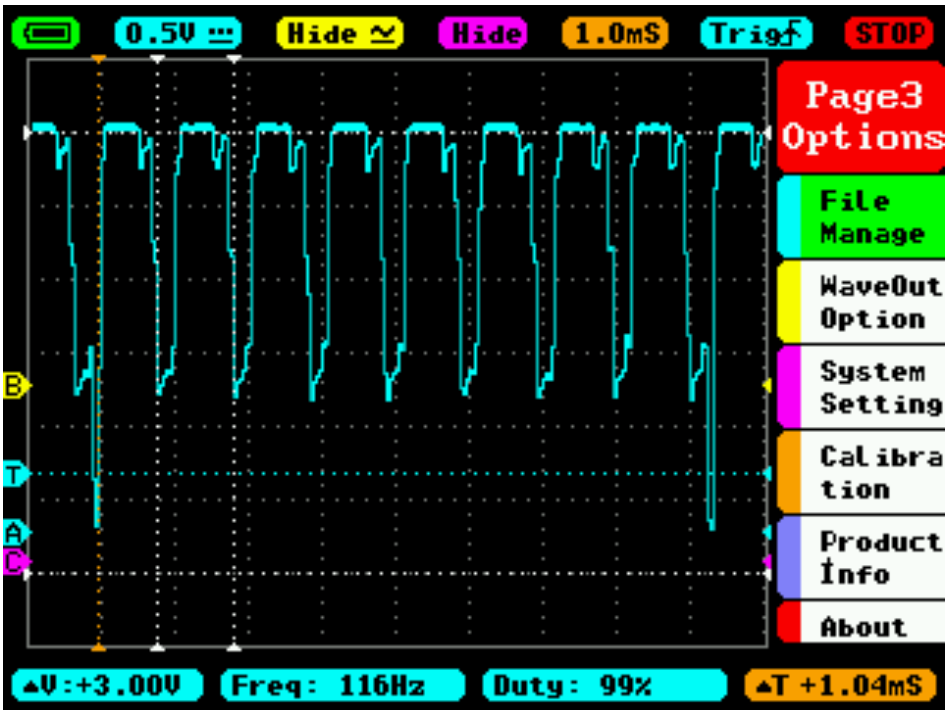

67. Samsung has infringed, and continues to infringe the claims of the ’887 patent in the United States, by making, using, offering for sale, selling and/or importing the Accused Products in violation of 35 U.S.C. § 271(a).

68. Samsung also has infringed, and continues to infringe the claims of the ’887 patent by actively inducing others to use the Accused Products. Samsung’s users, customers, agents or other third parties who use the Accused Products in accordance with Samsung’s instructions infringe the claims of the ’887 patent, in violation of 35 U.S.C. § 271(a). Samsung intentionally instructs its customers to infringe through support information, the Samsung automated Virtual Assistant, demonstrations, brochures, videos, and user guides, such as those located at: https://www.samsung.com/us/support/; https://www.samsung.com/us/televisions-home-theater/tvs/; https://www.samsung.com/us/support/remoteservice/; https://www.youtube.com/user/samsungspstv ; https://www.youtube.com/watch?v=qG5_RMQP6XI; https://www.youtube.com/channel/UCnEdfCdbxJJ9ouWKLSRCRRw; and https://www.youtube.com/channel/UCWwgaK7x0_FR1goeSRazfsQ ;

https://www.samsung.com/au/support/tv-audio-video/smart-tv-game-mode/ . Samsung is thereby liable for infringement of the ’887 patent under 35 U.S.C. § 271 (b).

69. Samsung is liable as a contributory infringer of the ’887 patent under 35 U.S.C. § 271(c) by having offered to sell, sold and imported and continuing to offer to sell, selling, and importing into the United States televisions with backlight controls, including, for example, the Samsung QLED NEO 8k, to be especially made or adapted for use in an infringement of the ’887 patent. The backlight control circuit and method is a material component for use in practicing the ‘887 patent and is specifically made and is not a staple article of commerce suitable for substantial noninfringing use.

70. As a result of Samsung’s infringement of the ’887 patent, Polaris PowerLED has suffered monetary damages and is entitled to no less than a reasonable royalty for Samsung’s use of the claimed inventions of the ’887 patent, together with interest and costs as determined by the Court. Polaris PowerLED will continue to suffer damages in the future.

71. Samsung is on notice of its infringement by no later than the filing and service of this Complaint. By the time of trial, Samsung will have known and intended (since receiving such notice) that its continued actions would actively induce and/or contribute to the infringement of the ’887 patent.

72. Samsung’s acts of direct and indirect infringement have caused and continue to cause damage to Polaris PowerLED. Polaris PowerLED is entitled to damages in accordance with 35 U.S.C. §§ 271, 281, and 284 sustained as a result of Samsung’s wrongful acts in an amount to be proven at trial.

COUNT III
(INFRINGEMENT OF U.S. PATENT NO. 8,740,456)

73. Polaris PowerLED incorporates by reference paragraphs 1-72 above.

Samsung Display, Ex. 1005, p. 28

74. Samsung has directly infringed and continues to directly infringe the ’456 patent by making, using, offering for sale, selling, and/or importing into the United States smart phones, including, for example, the Samsung S21 Ultra, as well as all other Samsung smart phones that include the Wireless Power Share feature (*See* https://www.samsung.com/us/support/answer/ANS00082564/).

75. Claim 9 of the ’456 patent, for example, reads as follows:

> 9. A device, comprising:
>
> a connection coupling a first device and a second device;
>
> a first port of the first device, wherein the first port is configured to receive a first connector of the connection;
>
> first logic of the first device coupled to the first port, wherein the first logic is configured to determine a temperature of the connection at the first connector;
>
> second logic of the first device, wherein the second logic is configured to provide current to the second device over the connection;
>
> a second port of the second device, wherein the second port is configured to receive a second connector of the connection;
>
> third logic of the second device coupled to the second port, wherein the third logic is configured to determine a temperature of the connection at the second connector;
>
> wherein, in response to the greater of the change in temperature determined by the first logic and the change in temperature determined by the third logic being above a threshold, the second logic is configured to reduce the current being provided from the first device to the second device.

76. Samsung has directly infringed, and continues to directly infringe, one or more claims of the ’456 patent, including at least claim 9 of the ’456 patent, literally and/or under the doctrine of equivalents, by or through making, using, offering for sale, selling within the United States and/or importing the Accused Products.

77. The Samsung S21 Ultra, for example, is “a device,” as shown below:

Source: https://www.samsung.com/us/smartphones/galaxy-s21-ultra-5g/models/

See https://www.youtube.com/watch?v=ffDpDKUORWQ

78. The Samsung S21 Ultra has "a connection coupling a first device and a second device." For example, each Samsung S21 Ultra has a wireless connection through its wireless power and communications port, encircled below:

79. The ’456 patent discloses that the connection may be wireless: “For example, while the various devices are shown as coupling via wires, the devices may be coupled wirelessly, e.g., via wireless USB, Bluetooth, WLAN, etc. FIGS. 2A and 2B Exemplary Block Diagrams of a Connection.” ’456 patent at col. 5:10-14.

80. The Samsung S21 Ultra has “a first port of the first device, wherein the first port is configured to receive a first connector of the connection.” For example, the first connector is the wireless power antenna shown below. The first port may include a portion of the assembly that receives the wireless power antenna coil.

81. The Samsung S21 Ultra has a "first logic of the first device coupled to the first port, wherein the first logic is configured to determine a temperature of the connection at the first connector." For example, the first port that receives the coil is connected to a first logic:

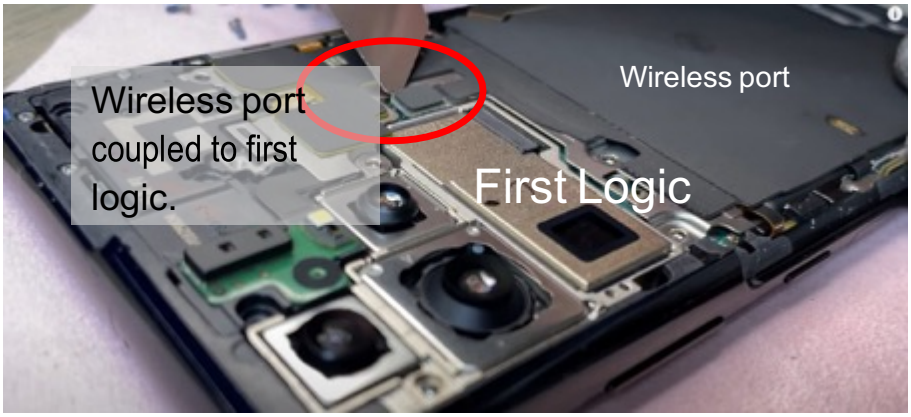

82. The first logic contains a temperature sensor which is used to determine the temperature:

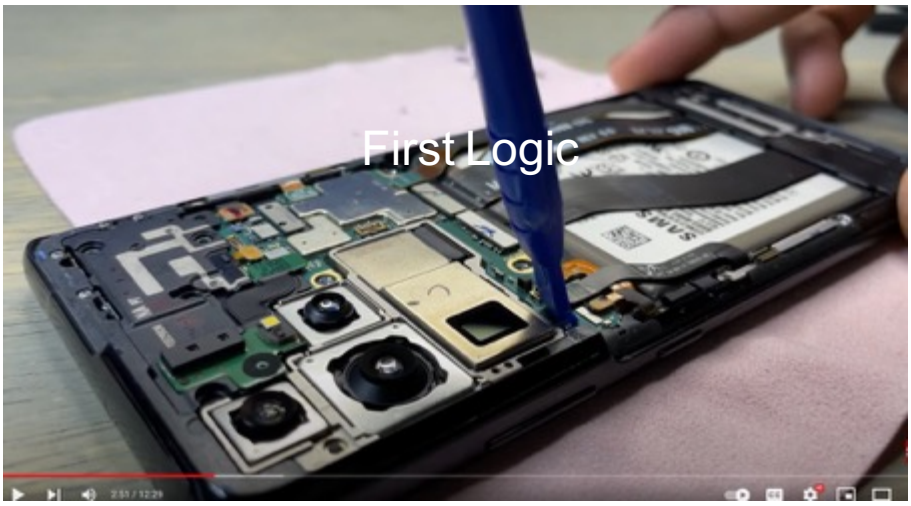

83. The Samsung S21 Ultra has a "second logic of the first device, wherein the second logic is configured to provide current to the second device over the connection." For example, each Samsung S21 Ultra is capable of Wireless Power Share. (*See* https://www.samsung.com/us/support/answer/ANS00082564/) . Wireless Power Share (*See* https://www.samsung.com/us/support/answer/ANS00082564/) enables each Samsung S21 Ultra to provide current to a second device. Current is provided from the second logic over the wireless connection. The second logic is shown below:

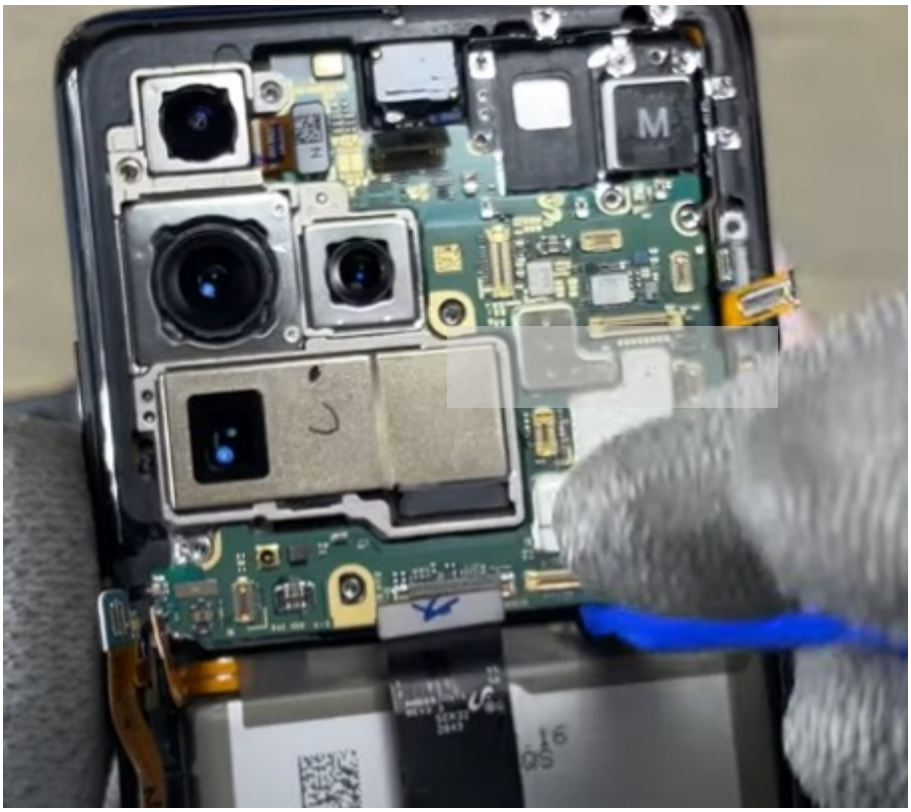

84. Each Samsung S21 Ultra has "a second port of the second device, wherein the second port is configured to receive a second connector of the connection." For example, every Samsung S21 Ultra has Wireless Power Share. (See https://www.samsung.com/us/support/answer/ANS00082564/). A second Samsung S21 Ultra can thus be the second device. The second connector is the wireless power antenna of the second Samsung S21 Ultra. The second port may include a portion of assembly that receives the wireless power antenna coil.

85. The Samsung S21 Ultra has a "third logic of the second device coupled to the second port, wherein the third logic is configured to determine a temperature of the connection at the second connector." For example, each Samsung S21 Ultra has Wireless Power Share. (*See* https://www.samsung.com/us/support/answer/ANS00082564/). A Samsung S21 Ultra can thus be the second device. For example, the second port that receives the coil is connected to a third logic:

86. The third logic contains a temperature sensor that is used to determine the temperature:

87. The Samsung S21 Ultra satisfies the claim limitation "wherein, in response to the greater of the change in temperature determined by the first logic and the change in temperature determined by the third logic being above a threshold, the second logic is configured to reduce the current being provided from the first device to the second device." For example, as described below the Samsung S21 Ultra is Qi standard compliant:

SAMSUNG

What is Wireless PowerShare?

Wireless PowerShare is an innovative feature that lets you turn your Galaxy S20, S20+, S20 Ultra, and Z Flip into a wireless charger. Also known as reverse wireless charging, it gives you the power to share your battery and charge your Galaxy Watch or Galaxy Buds+ with ease. It works with Qi-certified devices, which is a common standard, so as long as the device can be charged via Qi, you're able to give it some power from your phone.

See https://www.samsung.com/global/galaxy/what-is/wirelesspowershare/

88. The first device provides current through its wireless connection port, the first port, via the second logic. In this mode the first device is functioning as a Qi compliant transmitter. The Qi standard requires that the transmitter measure the temperature and that if the

rate rise is larger than 12 degrees, that charging be terminated. Qi V1.2.2 Parts 1 and 2 are described as follows:

4 Thermal interface

4.1 Interface Surface temperature rise

The Base Station shall limit the top surface temperature of the thermal Test Power Receiver (TPR-THERMAL, defined in *Part 3: Compliance Testing*) to at most 12 °C above the ambient temperature, while TPR-THERMAL is operating at its desired Control Point for 1 hour in an environment that is shielded against spurious thermal contributions due to air flow, radiation, etc. It is recommended that the Base Station limits the Interface Surface temperature to at most 5 °C above the ambient temperature, while powering TPR-THERMAL for 1 hour.

89. The second device is a Samsung S21 Ultra that is receiving power through the second wireless connection port. The second device is Qi compliant. The Qi standard requires the second device (i.e., the receiver of power) to monitor temperature. If a rise in temperature is too high, the second device communicates through the Qi standard communication protocol over the wireless connection that the second device should terminate charging, i.e., reduce current to zero. Qi Standard C1.1.2 provides as follows:

Samsung Display, Ex. 1005, p. 38

6.3.2 End Power Transfer Packet (0x02)

Table 6-3 defines the format of the message contained in an End Power Transfer Packet.

Table 6-5: End Power Transfer

	b_7	b_6	b_5	b_4	b_3	b_2	b_1	b_0
B_0	End Power Transfer Code							

End Power Transfer Code This field identifies the reason for the End Power Transfer request, as listed in Table 6-6. The Power Receiver shall not transmit End Power Transfer Packets that contain any of the values that Table 6-6 lists as reserved.

Table 6-6: End Power Transfer values

Reason	Value
Unknown	0x00
Charge Complete	0x01
Internal Fault	0x02
Over Temperature	0x03
Over Voltage	0x04
Over Current	0x05
Battery Failure	0x06
Reconfigure	0x07
No Response	0x08
Reserved	0x09...0xFF

90. Thus, the second logic will reduce current (to zero) in response to the greater of the change in temperature determined by the first logic as dictated by Qi § 4.1 and the change in temperature determined by the third logic being above a threshold. The second logic is configured, pursuant to Qi § 6.3.2, to reduce the current being provided from the first device to the second device.

91. Samsung has infringed, and continues to infringe, the claims of the ’456 patent in the United States, by making, using, offering for sale, selling, and/or importing the Accused Products in violation of 35 U.S.C. § 271(a).

92. Samsung also has infringed, and continues to infringe the claims of the ’456

Samsung Display, Ex. 1005, p. 39

patent by actively inducing others to use the Accused Products. Samsung's users, customers, agents or other third parties who use the Accused Products in accordance with the Samsung's instructions infringe the claims of the '456 patent, in violation of 35 U.S.C. § 271(a). Samsung intentionally instructs its customers to infringe through support information, the Samsung automated Virtual Assistant, demonstrations, brochures, videos, and user guides, such as those located at: https://www.samsung.com/us/support/; https://www.samsung.com/us/support/remoteservice/; https://www.youtube.com/user/samsungspstv ; https://www.youtube.com/watch?v=qG5_RMQP6XI; https://www.youtube.com/channel/UCnEdfCdbxJJ9ouWKLSRCRRw; and https://www.youtube.com/channel/UCWwgaK7x0_FR1goeSRazfsQ . Samsung is thereby liable for infringement of the '456 patent under 35 U.S.C. § 271(b).

93. Samsung has actively produced marketing materials specifically touting and promoting the accused Wireless PowerShare feature (*See* https://www.samsung.com/us/support/answer/ANS00082564/). For example, Samsung produced a television advertisement entitled "Galaxy S10: Wireless PowerShare" that was released around April 24, 2019, e.g., as shown:

Samsung Display, Ex. 1005, p. 40

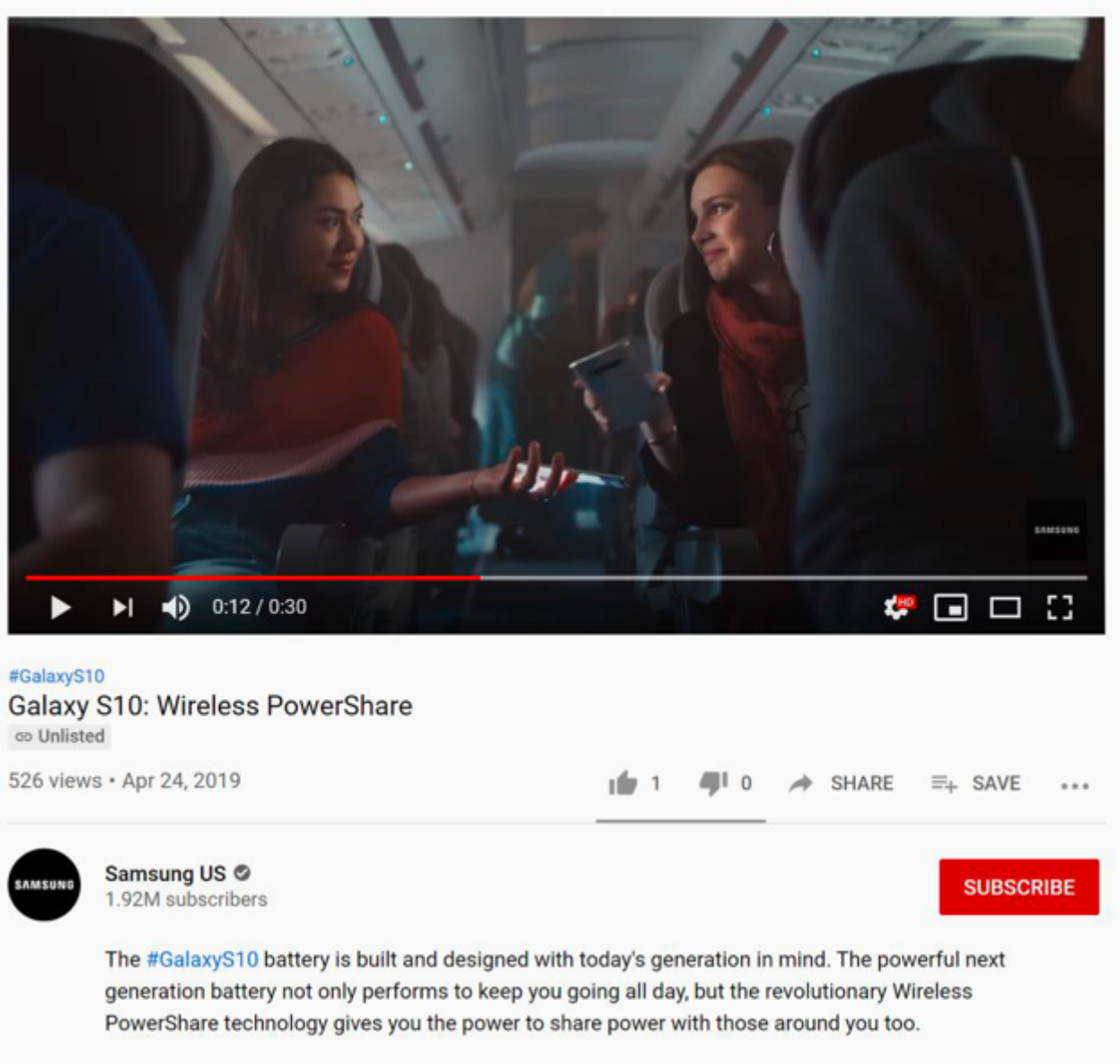

Samsung US, *Galaxy S10: Wireless PowerShare,* YOUTUBE.COM, available at https://youtu.be/4S8n9SmcXLE .

94. On information and belief, Samsung has spent millions of dollars promoting its Wireless PowerShare feature (*See* https://www.samsung.com/us/support/answer/ANS00082564/). Samsung has earned and continues to earn hundreds of millions of dollars in United States revenues based on sales of devices supporting the Wireless PowerShare feature (*See*

https://www.samsung.com/us/support/answer/ANS00082564/).

95. Samsung has induced and continues to induce through affirmative acts each other, their customers, and third parties, such as resellers and end-consumers of the Accused Products. The affirmative acts of inducement by Samsung include, but are not limited to, any one or a combination of: (i) manufacturing, selling, distributing, and/or otherwise making available the Accused Products; (ii) providing instructions, documentation, and other information to customers and end-users suggesting they use the Accused Products in an infringing manner, including in-store technical support, marketing, product manuals, advertisements, and online documentation; (iii) enabling and encouraging the use, sale, or importation of infringing devices by its customers, testers, marketers, end-user and the like; (iv) advertising and promoting the infringing devices and/or technology; (v) designing the Accused Products with specialized hardware and software for infringement; (vi) collaborating on and/or funding the development of the infringing devices and/or technology with third-parties; (vii) soliciting and sourcing the manufacture of infringing devices; (viii) licensing and transferring technology and know-how to enable the manufacture of infringing devices; and (ix) otherwise enabling and encouraging the use, sale, or importation of infringing devices.

96. For example, in addition to the above reproduced images, the following video further exemplifies how Samsung infringes and induces end-users to infringe:

Samsung Display, Ex. 1005, p. 42

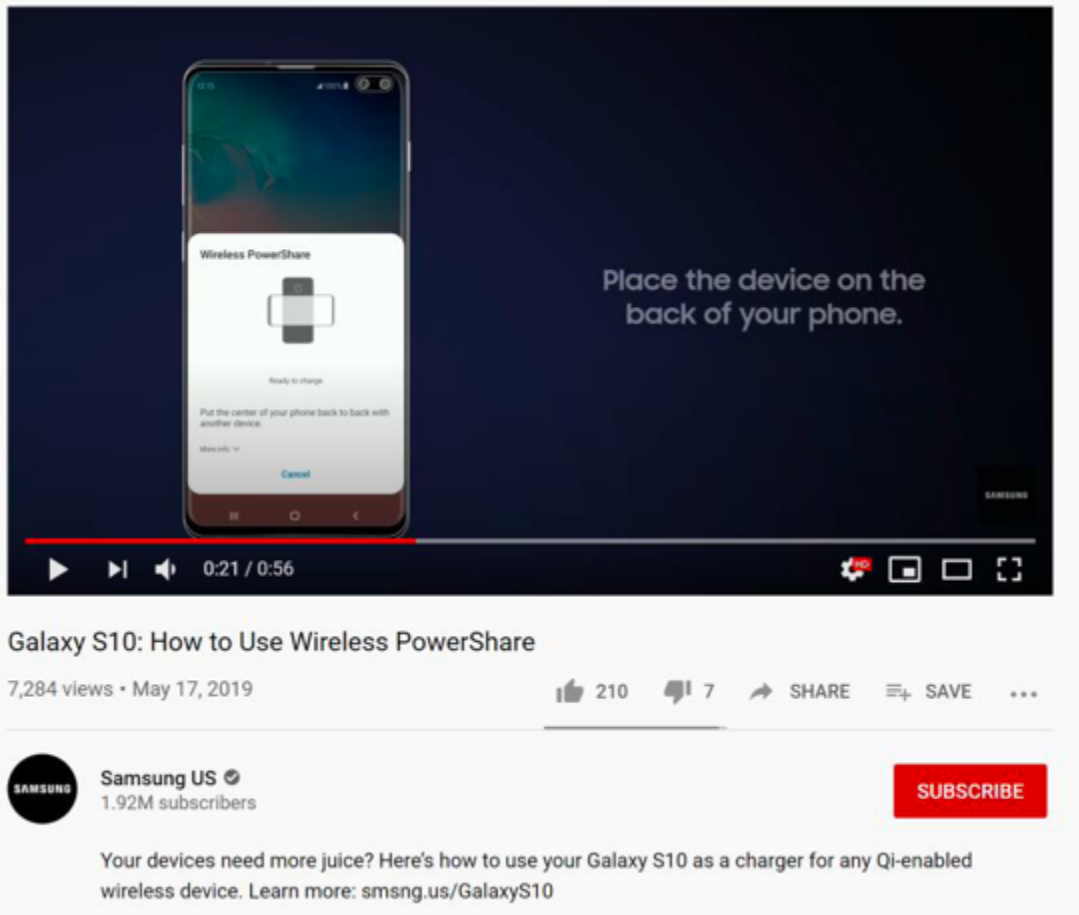

Samsung US, Galaxy S10: How to Use Wireless PowerShare, YOUTUBE.COM , available at https://www.youtube.com/watch?v=OdhWtnIPJn4 .

97. As a result, Samsung knew that the induced conduct would constitute infringement, and intended that infringement at the time of committing the aforementioned acts, such that the acts and conduct have been and continue to be committed with the specific intent to induce infringement, or to deliberately avoid learning of the infringing circumstances at the time of committing these acts so as to be willfully blind to the infringement that was induced.

98. Samsung is liable as a contributory infringer of the '456 patent under 35 U.S.C. § 271(c) by having offered to sell, sold and imported and continuing to offer to sell, selling, and importing into the United States the Samsung S21 Ultra, as well as all other Samsung smart phones that include the Wireless Power Share feature (*See*

https://www.samsung.com/us/support/answer/ANS00082564/), to be especially made or adapted for use in an infringement of the ’456 patent. The Wireless Power Share feature (*See* https://www.samsung.com/us/support/answer/ANS00082564/) is a material component for use in practicing the ’456 patent and is specifically made and is not a staple article of commerce suitable for substantial noninfringing use.

99. Samsung has contributed and continues to contribute to the direct infringement of the ’456 patent, by each other, their customers, testers, marketers, end-users, and other third parties.

100. Samsung imports, exports, makes, or sells devices, parts, components, or immediate products to customers, testers, marketers, end-users, and other third parties that when used, sold, or offered for sale infringe upon the ’456 patent.

101. Samsung makes, uses, sells, and/or offers to sell infringing devices which are especially made to design and specification, and are not staple commodities with substantial noninfringing uses.

102. For example, the Accused Products include specialized hardware and software.

103. Samsung knew of or was willfully blind to the specialized and non-commodity nature of the infringing devices, and the lack of substantial noninfringing uses.

104. As a result of Samsung’s infringement of the ’456 patent, Polaris PowerLED has suffered monetary damages and is entitled to no less than a reasonable royalty for Samsung’s use of the claimed inventions of the ’456 patent, together with interest and costs as determined by the Court.

105. Samsung is on notice of its infringement by no later than the filing and service of this Complaint. By the time of trial, Samsung will have known and intended (since receiving

such notice) that its continued actions would actively induce and/or contribute to the infringement of the ’456 patent.

106. Samsung’s acts of direct and indirect infringement have caused and continue to cause damage to Polaris PowerLED. Polaris PowerLED is entitled to damages in accordance with 35 U.S.C. §§ 271, 281, and 284 sustained as a result of Samsung’s wrongful acts in an amount to be proven at trial.

PRAYER FOR RELIEF

WHEREFORE, Polaris PowerLED requests the following relief from this Court:

(A) A judgment that each defendant is liable for infringement of one or more claims of the ’521 patent, the ’887 patent, and the ’456 patent;

(B) Compensatory damages in an amount according to proof, and in any event no less than a reasonable royalty, including all pre-judgment and post-judgment interest at the maximum rate allowed by law;

(C) Pre-judgment interest;

(D) Post-judgment interest; and

(E) A judgment granting Polaris PowerLED such further relief as the Court may deem just and proper.

Samsung Display, Ex. 1005, p. 45

DEMAND FOR JURY TRIAL

Pursuant to Rule 38(b) of the Federal Rules of Civil Procedure, Polaris PowerLED demands a trial by jury for all issues so triable.

Dated: December 12, 2022

By: */s/ Deron R. Dacus*
Deron R. Dacus

The Dacus Firm, P.C.
Deron R. Dacus
Texas Bar No. 00790553
ddacus@dacusfirm.com
821 ESE Loop 323
Suite 430
Tyler, TX 75701
Telephone: (903) 705-7233
Facsimile: (903) 581-2543

Attorneys for Plaintiff
Polaris PowerLED Technologies, LLC

Of Counsel:

Robert F. Kramer
CA Bar No. 181706 (Admitted E.D. Texas)
Email: rkramer@kramerday.com
M. Elizabeth Day
CA Bar No. 177125 (Admitted E.D. Texas)
Email: eday@kramerday.com
David Alberti (*pro hac vice* pending)
CA Bar No. 220265
dalberti@kramerday.com
Sal Lim (*pro hac vice* pending)
CA Bar No. 211836
Email: slim@kramerday.com
Russell S. Tonkovich
CA Bar No. 233280 (Admitted E.D. Texas)
Email: rtonkovich@kramerday.com
Marc Belloli (*pro hac vice* pending)
CA Bar No. 244290
mbelloli@kramerday.com
Robert Mattson (*pro hac vice* pending)

Samsung Display, Ex. 1005, p. 46

Virginia Bar No. 43568
rmattson@kramerday.com
James P. Barabas (*pro hac vice* pending)
NJ Bar No. 018262000
jbarabas@kramerday.com
Andrew Hamill (*pro hac vice* pending)
CA Bar No. 251156
ahamill@kramerday.com
KRAMER DAY ALBERTI LIM
TONKOVICH & BELLOLI LLP
577 Airport Blvd., Suite 250
Burlingame, CA. 94010
Tel: 650 825-4300
Fax: 650 460-8443

Samsung Display, Ex. 1005, p. 47

CERTIFICATE OF SERVICE

I hereby certify that a copy of the foregoing document was filed electronically in compliance with Local Rule CV-5(a). Therefore, this document was served on all counsel who are deemed to have consented to electronic service. Local Rule CV-5(a)(3)(A). Pursuant to Fed. R. Civ. P. 5(d) and Local Rule CV-5(d) and (e), all other counsel of record not deemed to have consented to electronic service were served with a true and correct copy of the foregoing by email on this 12th day of December, 2022.

By: */s/ Deron R. Dacus*
Deron R. Dacus

Samsung Display, Ex. 1005, p. 48