The Impact of the Transient Response of Organic Light Emitting Diodes on the Design of Active Matrix OLED Displays

R.M.A. Dawson, Z. Shen, D.A. Furst, S. Connor, J. Hsu, M.G. Kane, R.G. Stewart, A. Ipri
Sarnoff Corporation, Princeton, NJ, U.S.A.

C.N. King, P.J. Green, R.T. Flegal, S. Pearson, W.A. Barrow, E. Dickey, K. Ping, S. Robinson.
Planar America, Beaverton, OR, U.S.A.

C.W. Tang, S. Van Slyke, F. Chen, J. Shi
Eastman Kodak Company, Rochester, NY, U.S.A.

M.H. Lu, J.C. Sturm
Princeton University, Princeton, NJ, U.S.A.

Abstract

Much of the organic light emitting diode (OLED) characterization published to date addresses the high current regime encountered in the operation of passively addressed displays. Higher efficiency and brightness can be obtained by driving with an active matrix, but the lower instantaneous pixel currents place the OLEDs in a completely different operating mode. Results at these low current levels are presented and their impact on active matrix display design is discussed.

Introduction

Organic light emitting diodes have rapidly developed since the first demonstration of light emission by Tang et. al.[1] to the point that passively addressed displays are now reaching the market.[2] Most of the electrical and optical characterization to date has supported the development of passive matrix displays where, for a VGA display, peak brightness levels close to 100,000 nits are necessary, drive levels of 20 volts are used and the time available to drive each pixel is less than 100 μsec.[3,4] These high operating levels reduce the OLED efficiency and cause significant voltage drops in the row lines, leading to a less efficient and less bright display than is possible with an active matrix. In an active matrix display, the pixel provides a constant current through the entire frame time, allowing for reduced display voltages and peak current levels at least two orders of magnitude lower than for a passive display of equivalent brightness. However, the active matrix drive scheme places the OLED in a completely different operating mode. This paper presents new results on the operating characteristics of OLEDs in voltage driven and active matrix driven modes and discusses the impact of these characteristics on the design of an active matrix display.

OLED Operation and Characterization

Passively addressed displays operate in a high current regime because only a single row time is available to illuminate each pixel. Due to these high currents, the data line and the OLED capacitances settle quickly to the appropriate voltage when the pixel is illuminated and the pixel operates as if it is driven with a voltage. The active matrix display, on the other hand, has a transistor in series with the OLED which supplies a constant current throughout the frame time. This allows for much lower current levels, but causes the settling times to be much longer. The difference between these two drive techniques is shown schematically in Fig. 1 where the OLED is driven either with a programmable voltage source, the equivalent of the passively addressed display, or with a transistor, as in an active matrix display. Included in Fig. 1 is an equivalent circuit for the OLED which has a capacitor in parallel with the diode. The diode is created by the stack of the hole-injecting indium-tin oxide anode, hole transport and electron transport organic layers, followed by a low work function cathode. The diode can be approximated by a SPICE diode with an n factor of 30, I_s of 1×10^{-7} A/cm^2, and series resistance of 80 ohms. The capacitor is formed by the quasi-insulating organic layers between the highly conducting ITO and cathode layers.[1] The capacitance for both the small molecule and polymer diodes is approximately 25 nF/cm^2, so a typical capacitance for a 200 μm x 100 μm pixel is 5 pF.

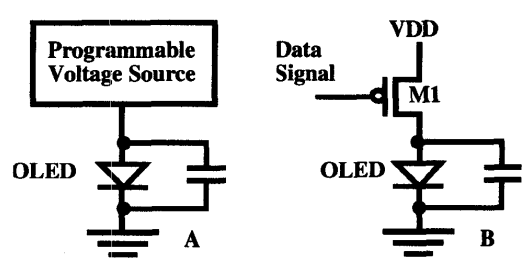

Fig. 1. Equivalent circuits for passively addressed (A) and active matrix addressed (B) OLED pixels.

0–7803–4774–9/98/$10.00 © 1998 IEEE

IEDM 98–875

Authorized licensed use limited to: Seattle University. Downloaded on July 17,2023 at 16:02:04 UTC from IEEE Xplore. Restrictions apply.

Polaris EX2003
Samsung v. Polaris
IPR2023-00771

OLED Driven by a Voltage Source

When the OLED is driven in the mode shown in Fig. 1A, the parallel capacitance is quickly charged and discharged by the voltage source, so it does not significantly affect the voltage level across the diode. This implies that when the OLED is first turned on, a large current flows to charge the parallel capacitance. The traps in the hole and electron transport materials are then filled by the constant current associated with the diode itself and the luminescence increases as the injected charge stabilizes at the given voltage level. This interpretation is consistent with the current and luminance responses of a 0.1 cm^2 OLED shown in Figs. 2 and 3. The current versus time is shown in Fig. 2 where there is an initial current peak charging the parallel capacitance followed by a region of constant current determined by the diode. The maximum current shown in Fig. 2 is 7 mA/cm^2 which is the peak current level necessary for an active matrix display with a brightness of about 100 nits. These levels are lower than those in a passive matrix display, but demonstrate the voltage driven response of the OLED and can be compared directly to the active matrix pixel results in the next section.

The normalized luminance output for the same set of drive voltages, Fig. 3, shows that under higher voltage drive conditions, the luminance initiates rapidly, but that for lower drive voltages, the luminance increase is slower. This is consistent with the slow filling of traps in the OLED material when low currents are injected and agrees with previously published results where the luminance increased more rapidly under higher voltage drive conditions[3,4,5]. It should be noted that this slow increase in luminance is not an issue for an active matrix display since the initiation of the luminance is much faster than the frame time and the pixel is continuously illuminated through the entire frame.

OLED Driven by a Transistor

The characteristics of the active matrix pixel of Fig. 1B are determined by the transistor connected in series with the OLED where the transistor acts as a current source. For a 200 μm x 100 μm pixel at typical luminance levels of 100 nits, the transistor current is only a few microamps. As

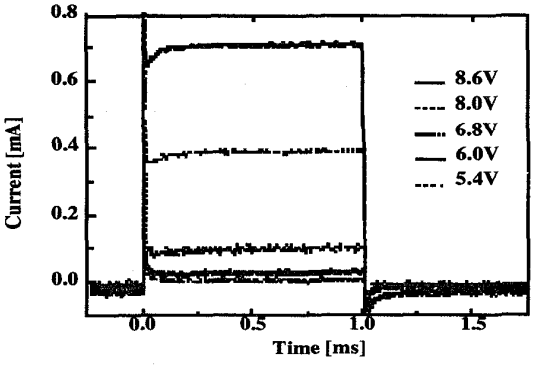

Fig. 2. Current in a 0.1 cm^2 OLED in voltage drive mode for applied voltages of 8.6, 8.0, 6.8, 6.0 and 5.4 volts.

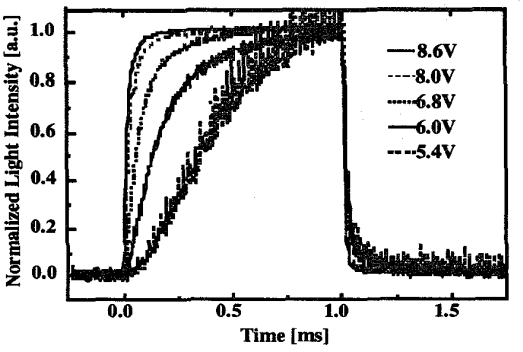

Fig. 3. Normalized light intensity from a 0.1 cm^2 OLED for applied voltages of 8.6, 8.0, 6.8, 6.0 and 5.4 V.

noted above, the pixel capacitance is 5 pF which is large for these small currents. A simple illustration is that it takes about 8 usec for a 3 μA current to charge 5 pF through 5 volts. This illustration shows that the time constant associated with charging the parallel capacitance is large. Two other effects occur in the OLED which cause these time constants to increase still further. The first is that as the OLED is turned on, much of the current flows directly through the diode rather than charging the parallel capacitance. The second is that the 3 μA currents are for peak brightness levels and that for lower levels, the currents are much smaller with correspondingly longer charging times. These two factors cause the parallel capacitance charging time constants to increase well beyond a row time which for a VGA display is 31.7 usec. The impact of the parallel capacitance was investigated to determine the actual charging times and their effect on the luminance response. A polysilicon transistor with dimensions W/L=400/4 μm was connected in series with a 0.1 cm^2 OLED and the results of current, voltage across the OLED, and luminance were measured. The voltage was measured with a high impedance Picoprobe, model 18B, to avoid discharging the diode through the oscilloscope input impedance.

The polysilicon transistor acts as a constant current source, so it provides no current spike to charge the parallel capacitance when turned on. This is demonstrated in Figs. 4 and 5 where the constant current provided by the transistor and the voltage across the OLED are plotted versus time for different transistor gate biases. The constant current provided by the transistor for a given gate to source voltage is apparent in Fig. 4. The slow increase of the OLED voltage is shown in Fig. 5 where the rate of increase in the voltage decreases with decreasing current. The figure shows that the response time of the device is several hundred μsec, indicating that the two effects mentioned above cause a significant increase in the charging times compared to a simple parallel plate capacitor charged with a constant current. The impact of the slow charging of the OLED on the luminance output is demonstrated in Fig. 6 where the normalized luminance initiates quickly for the higher current conditions while it turns on more slowly for the low current cases. Also apparent in Fig. 6 is the slow extinction of the luminance at

Authorized licensed use limited to: Seattle University. Downloaded on July 17,2023 at 16:02:04 UTC from IEEE Xplore. Restrictions apply.

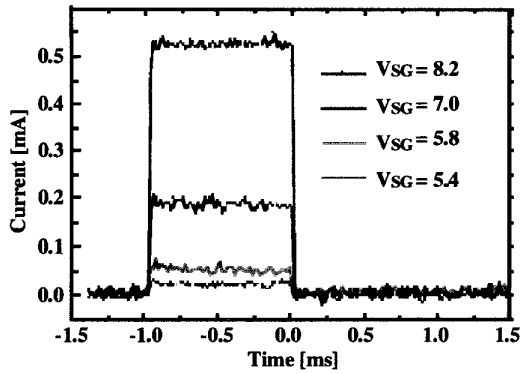

Fig. 4. Transistor current passed through a 0.1 cm^2 OLED at gate to source voltages of 5.4, 5.8, 7.0 and 8.2 V.

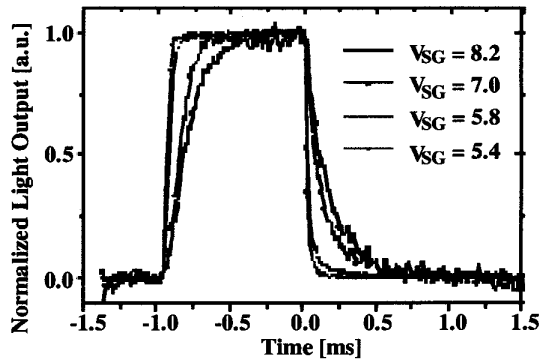

Fig. 6. OLED normalized light emission for polysilicon TFT gate to source voltages of 5.4, 5.8, 7.0 and 8.2 V.

lower current levels. When the transistor is turned off, the diode must discharge the parallel capacitance. The initial discharge is rapid since the diode is turned on, but as the diode current drops into the subthreshold regime, the diode resistance increases exponentially and the discharge slows. This effect is also evident in Fig. 5 where the voltage of the OLED decays rapidly after the transistor is turned off, but then slows as the diode turns off.

The slow response of the OLED at low drive currents requires a different approach to an active matrix OLED display design compared to a passively addressed display. The OLED parallel capacitance and its slow charge and discharge through either the pixel transistor or through the diode itself forces the display designer to reconsider pixel programming techniques. The voltage across the OLED may not settle in the time available to load data into a pixel; and autozero cycles used to calibrate the data against the transistor and OLED threshold voltages may be ineffective due to the long settling times.

Analysis of a Current Programmed Active Matrix OLED Pixel

The impact of the slow response of the OLED can best be understood by considering a specific pixel design. One promising design is a pixel which is programmed with a data

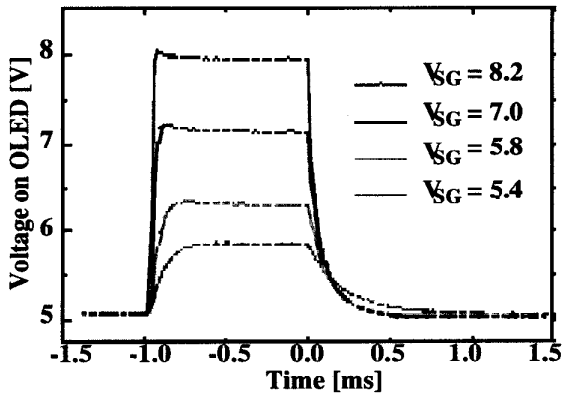

Fig. 5. OLED voltage when driven by a polysilicon TFT with gate to source voltages of 5.4, 5.8, 7.0 and 8.2 V.

current and then allowed to operate independently for the rest of the frame time. An example of such a pixel is shown in Fig. 7 with its accompanying timing diagram in Fig. 8. The advantage of programming the pixel with a current is that pixel to pixel variations in the drive TFT and the OLED threshold voltage can be calibrated out by letting the pixel settle to the conditions appropriate for the desired data current. It is essential to account for variations in the TFT and OLED parameters since the eye is extremely sensitive to brightness non-uniformity. Variations in the TFTs and OLEDs can be significant.[6,7,8] and failure to account for them creates a "salt and pepper" effect in the display appearance.

Programming of this pixel is accomplished by turning off MN4 with VGP, turning on MN1 and MN3 with SELECT, and driving the data current, I_{data}, to set the pixel current. The pixel is allowed to settle after which MN1 and MN3 are turned off again. This sets the gate to source voltage of MN2 which is stored on C1 for the rest of the frame time. Once the programmed voltage is stored, the pixel

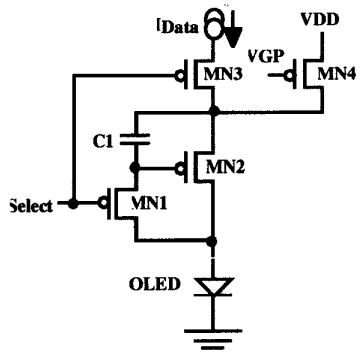

Fig. 7. Current programmed OLED pixel.

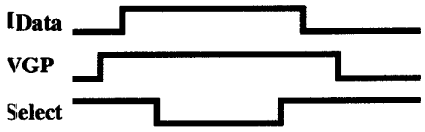

Fig. 8. Current programmed OLED pixel timing.

Authorized licensed use limited to: Seattle University. Downloaded on July 17,2023 at 16:02:04 UTC from IEEE Xplore. Restrictions apply.

can be connected to the power supply for illumination. The settling time of the OLED is an issue for this pixel since only one row time is available to program each row of pixels and programming currents of a few microamps are used. This could be overcome for low resolution displays which have longer row times, but for displays with VGA resolution and up, the slow charging times may cause this pixel to fail.

Other techniques must be used to calibrate out the variations in the transistor and OLED characteristics without relying on the settling and charging times of the OLED. An example of such a pixel is shown in Fig. 9 with timing in Fig. 10.[9] This pixel autozeroes against VDD, so it does not rely on the settling time of the OLED to calibrate out the TFT threshold voltage variations. It is programmed by applying a voltage to the gate of MN2 which supplies a constant current throughout the frame time, so it does not rely on the charging time of the OLED for programming.

Conclusions

The electrical and optical responses of organic light emitting diodes at the voltage and luminance levels required for an active matrix display were characterized. The OLED responds quickly to voltages driven by a voltage source, equivalent to the conditions encountered in a passive matrix display. The voltage source supplies an initial spike of current which charges the OLED parallel capacitance and sets the voltage across the OLED. The luminance response is then determined only by the diode characteristics. The conditions in an active matrix display are different since the drive transistor in the pixel provides a constant current to the OLED. The parallel plate capacitance becomes an important issue due to its large size and the relatively long times required to charge it with the pixel current. In addition, the discharge time of the OLED through its own diode path is long because the diode resistance rises exponentially as the current drops into the subthreshold region of the diode current-voltage characteristic. These long charging times must be taken into consideration when designing an active matrix OLED pixel and limits the possibilities for calibrating and programming pixels. A pixel which calibrates the TFT and OLED variations by autozeroing into a power supply and does not rely on the OLED settling time for programming was designed and demonstrated.

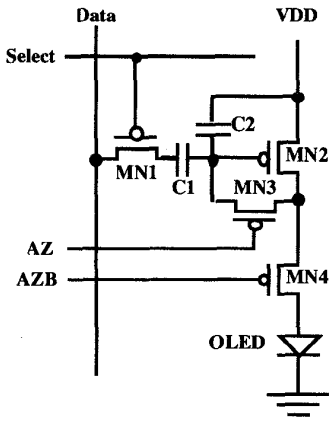

Fig. 9. Voltage programmed OLED pixel.

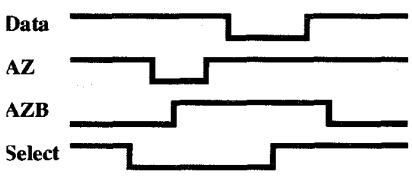

Fig. 10. Voltage programmed OLED pixel timing.

Acknowledgments

This work is supported by Bruce Gnade of the Defense Advanced Research Projects Agency (DARPA) under contract F33615-96-2-1944 monitored by Gurdial Saini and Darrel Hopper of Wright Laboratory, Displays Branch.

References

1. C.W. Tang and S. Van Slyke, "Organic Electroluminescent Diodes", Appl. Phys. Lett. **51**, 913 (1987)
2. T. Tohma, "Recent Progress in the Development of Organic EL Display Devices," SID, International Display Research Conference Proc., 1997, p. F1.1.
3. C. Hosokawa, M. Matsuura, M. Eida, K. Fukuoka, H. Tokailin and T. Kusumoto, "Full-Color Organic EL Display," SID, International Symp. Proc., 1998, p.7.
4. C. Hosokawa, H. Tokailin, H. Higashi and T. Kusumoto, "Transient electroluminescence from hole transporting emitting layer in nanosecond region," Appl. Phys. Lett. **63**, 1322 (1993)
5. H. Nakamura, C. Hosokawa and T. Kusumoto, "Transient Behavior of Organic EL Cells," Conference on Inorganic and Organic Electroluminescence Proc., Berlin, 1996 p. 95.
6. S.A. Van Slyke, C.H. Chen and C.W. Tang, "Organic Electroluminescent devices with improved stability," Appl. Phys. Lett. **69**, 2162 (1996).
7. H. Akimoto, M. Hatano and T. Sakai, "Short-Channel Effect of Sub-Micron Poly-Si TFTs with Large Poly-Si Grains," SID, International Symp. Proc., 1998, p. 891.
8. H. Sekine, H. Asada, Y. Ogawa, K. Ozawa, K. Mochizuki, F. Okumura, and S. Kaneko, "Amplifier Compensation Method for a Poly-Si TFT LCLV with an Integrated Data-Driver," SID, International Display Research Conference Proc., 1997, p. 45.
9. R.Dawson, Z. Shen, D.A. Furst, S. Connor, J. Hsu, M.G. Kane, R.G. Stewart, A. Ipri, C.N. King, P.J. Green, R.T. Flegal, S. Pearson, W.A. Barrow, E. Dickey, K. Ping, S. Robinson, C.W. Tang, S. Van Slyke, F. Chen, J. Shi, J.C. Sturm and M.H. Lu, "Design of an Improved Pixel for a Polysilicon Active-Matrix Organic LED Display," SID, International Symposium Proceedings, 1998, pg. 11.

Authorized licensed use limited to: Seattle University. Downloaded on July 17,2023 at 16:02:04 UTC from IEEE Xplore. Restrictions apply.