US00D735131S

(12) United States Design Patent

Akana et al.

(10) Patent No.: US D735,131 S
(45) Date of Patent: ** Jul. 28, 2015

(54) **CHARGER**

(71) Applicant: **Apple Inc.**, Cupertino, CA (US)

(72) Inventors: **Jody Akana**, San Francisco, CA (US); **Bartley K. Andre**, Palo Alto, CA (US); **Shota Aoyagi**, San Francisco, CA (US); **Anthony Michael Ashcroft**, San Francisco, CA (US); **Jeremy Bataillou**, San Francisco, CA (US); **Daniel J. Coster**, San Francisco, CA (US); **Daniele De Iuliis**, San Francisco, CA (US); **M. Evans Hankey**, San Francisco, CA (US); **Julian Hoenig**, San Francisco, CA (US); **Richard P. Howarth**, San Francisco, CA (US); **Jonathan P. Ive**, San Francisco, CA (US); **Duncan Robert Kerr**, San Francisco, CA (US); **Marc A. Newson**, London (GB); **Matthew Dean Rohrbach**, San Francisco, CA (US); **Peter Russell-Clarke**, San Francisco, CA (US); **Benjamin Andrew Shaffer**, San Jose, CA (US); **Mikael Silvanto**, San Francisco, CA (US); **Christopher J. Stringer**, Woodside, CA (US); **Eugene Antony Whang**, San Francisco, CA (US); **Rico Zörkendörfer**, San Francisco, CA (US)

(73) Assignee: **Apple Inc.**, Cupertino, CA (US)

(**) Term: **14 Years**

(21) Appl. No.: **29/498,998**

(22) Filed: **Aug. 11, 2014**

(51) **LOC (10) Cl.** **13-02**

(52) **U.S. Cl.**
USPC **D13/108**

(58) **Field of Classification Search**
USPC D13/107–110, 118–119, 182, 199; D14/251, 253, 432, 434; 320/107–115
CPC Y02E 60/12; Y02T 90/14; Y02T 90/122; Y02T 90/128; Y02T 90/163; H02J 7/025; H02J 7/0042; H02J 7/0044; H02J 7/0045; H02J 7/0003; H01F 38/14; H01R 13/6675; H01M 2/1022; H01M 2/1055; H01M 10/44; H01M 10/46; H01M 10/425; B60L 11/182
See application file for complete search history.

(56) **References Cited**

U.S. PATENT DOCUMENTS

D221,081 S * 7/1971 Kahn D13/110
D461,813 S * 8/2002 Chang D14/432

(Continued)

Primary Examiner — Rosemary K Tarcza
(74) *Attorney, Agent, or Firm* — Sterne, Kessler, Goldstein & Fox P.L.L.C.

(57) **CLAIM**

The ornamental design for a charger, as shown and described.

DESCRIPTION

FIG. **1** is a bottom front perspective view of a charger showing our new design;
FIG. **2** is a bottom rear perspective view thereof;
FIG. **3** is a front view thereof;
FIG. **4** is a rear view thereof;
FIG. **5** is a left side view thereof;
FIG. **6** is a right side view thereof;
FIG. **7** is a top view thereof;
FIG. **8** is a bottom view thereof;
FIG. **9** is a perspective view thereof showing the charger in an environment in which it may be used;
FIG. **10** is a perspective view thereof showing the charger in another environment in which it may be used; and,
FIG. **11** is a perspective view thereof showing the charger in another environment in which it may be used.
The broken lines in the Figures show portions of the charger and environment that form no part of the claimed design. The shade lines in the Figures show contour and not surface ornamentation.

1 Claim, 5 Drawing Sheets

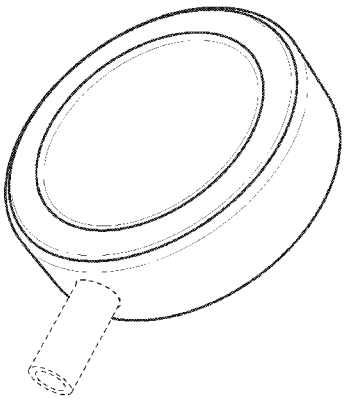

Masimo Ex. 1034
IPR Petition - US D883,279

(56) **References Cited**

U.S. PATENT DOCUMENTS

D599,241	S		9/2009	Andre et al.	
D620,884	S	*	8/2010	Lee et al.	D13/108
D625,262	S	*	10/2010	Lee et al.	D13/118
D640,976	S	*	7/2011	Matsuoka	D13/108
D643,844	S		8/2011	Akana et al.	
D654,431	S	*	2/2012	Stephanchick et al.	D13/108
D659,093	S	*	5/2012	Schmid et al.	D13/108
D662,939	S		7/2012	Akana et al.	
D673,110	S	*	12/2012	Sasada et al.	D13/108
D687,772	S	*	8/2013	Chikos et al.	D13/108
D694,182	S	*	11/2013	Lee et al.	D13/108
D697,027	S	*	1/2014	Ho	D13/108
D701,831	S	*	4/2014	Park et al.	D13/108
D704,634	S	*	5/2014	Eidelman et al.	D13/108
D706,212	S	*	6/2014	Zwierstra et al.	D13/107
D718,233	S	*	11/2014	Aumiller et al.	D13/108
D718,234	S	*	11/2014	Rautiainen	D13/108
D718,236	S	*	11/2014	Murray	D13/108
D718,712	S	*	12/2014	Aumiller et al.	D13/108
D720,289	S	*	12/2014	Chiang et al.	D13/108
D725,034	S	*	3/2015	Chen	D13/108
D727,260	S	*	4/2015	Aumiller et al.	D13/108
2012/0104999	A1	*	5/2012	Teggatz et al.	320/108
2014/0117926	A1	*	5/2014	Hwu et al.	320/108
2015/0091500	A1	*	4/2015	Claudepierre	320/108

* cited by examiner

Masimo Ex. 1034
IPR Petition - US D883,279

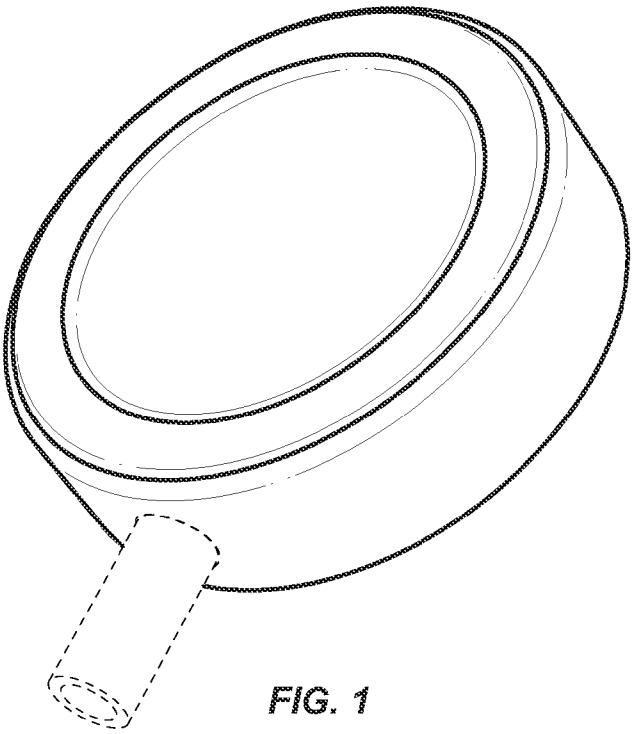

FIG. 1

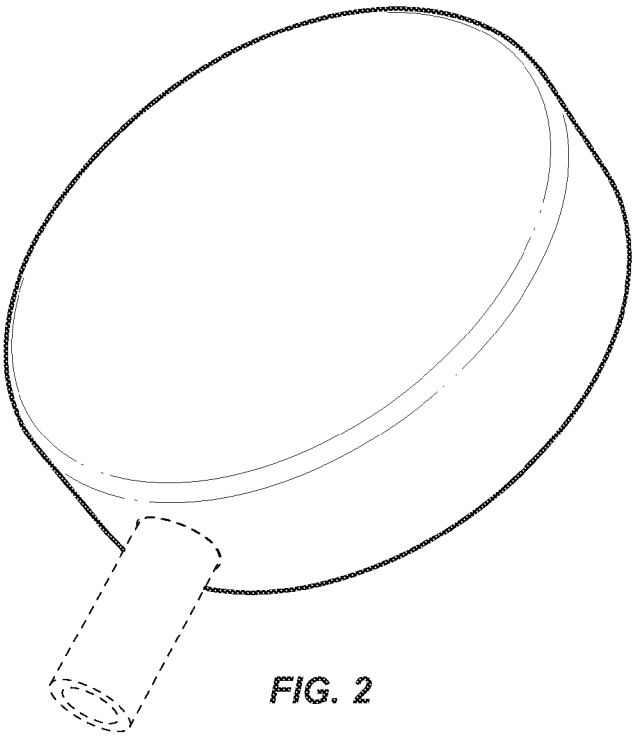

FIG. 2

Masimo Ex. 1034
IPR Petition - US D883,279

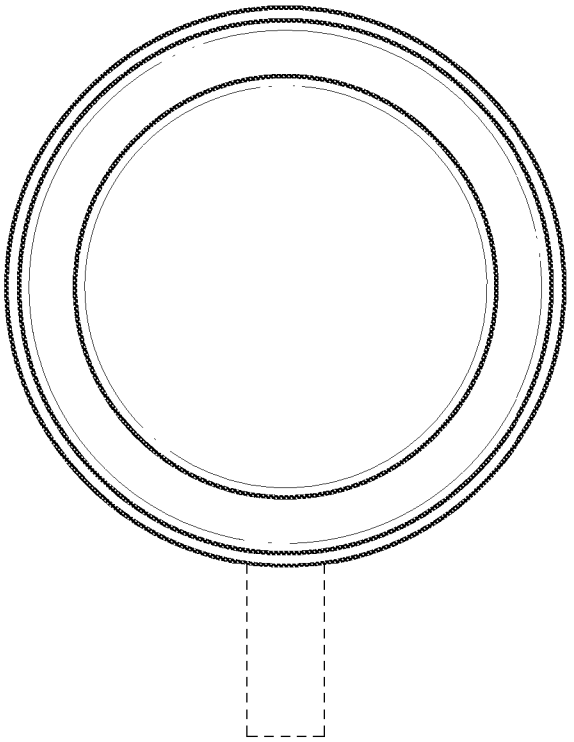

FIG. 3

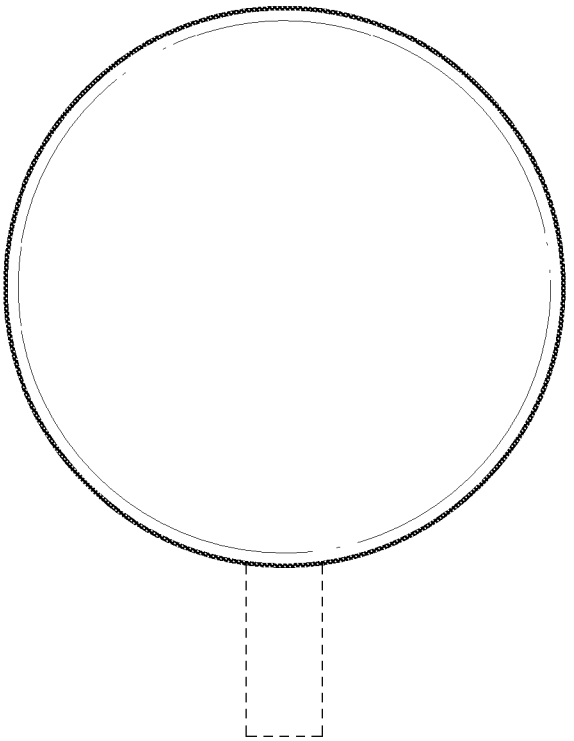

FIG. 4

FIG. 5

FIG. 6

FIG. 7

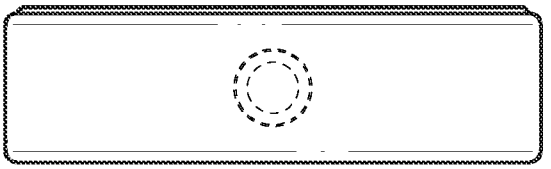

FIG. 8

Masimo Ex. 1034
IPR Petition - US D883,279

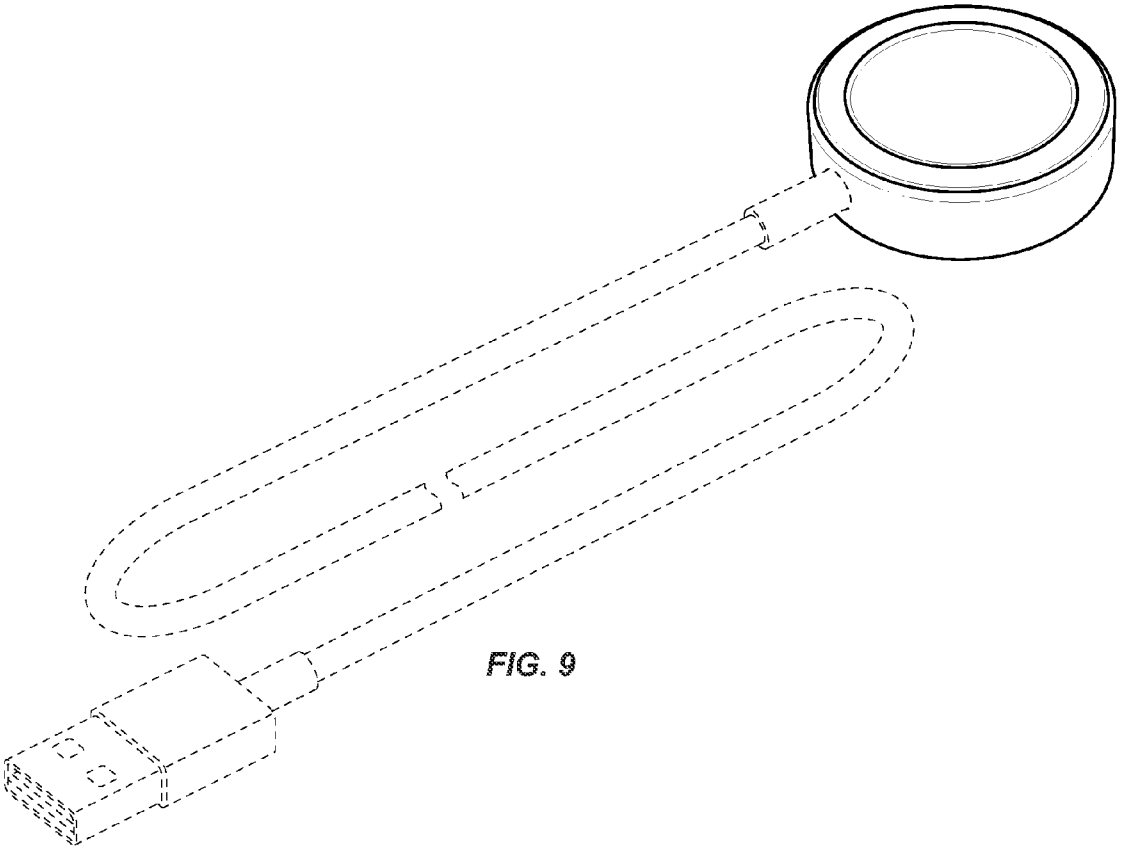

FIG. 9

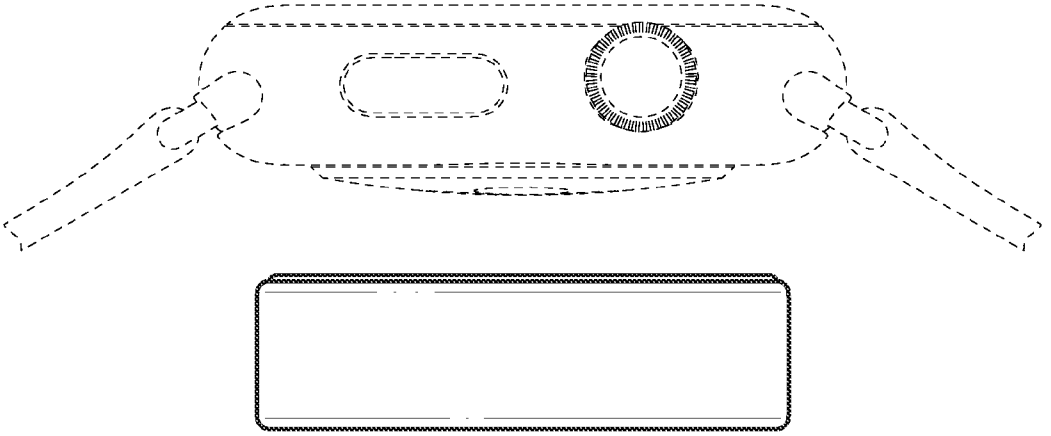

FIG. 10

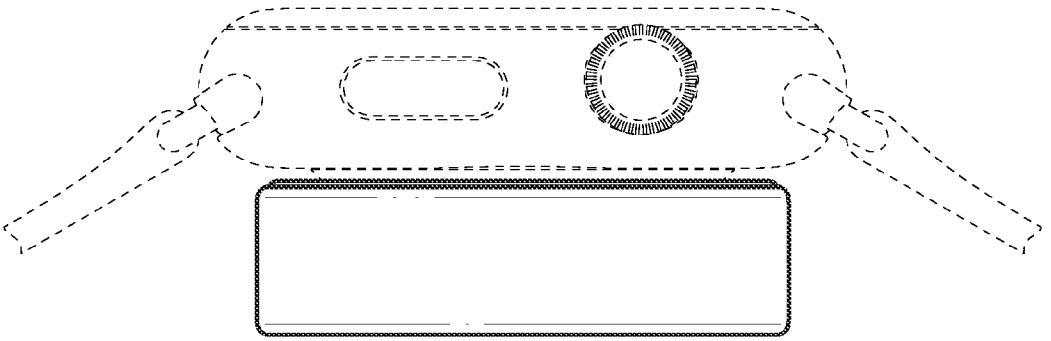

FIG. 11