Physiol. Meas. **34** (2013) R47–R69 doi:10.1088/0967-3334/34/9/R47

TOPICAL REVIEW

Dry electrodes for electrocardiography

N Meziane[1,2,3], J G Webster[1,4], M Attari[2] and A J Nimunkar[1]

[1] Department of Biomedical Engineering, University of Wisconsin–Madison, 1550 Engineering Dr., Madison, WI 53706-1609, USA
[2] Department of Instrumentation and Automatics, University of Sciences and Technology Houari Boumediene, PO Box 32, Bab-Ezzouar, 16111, Algiers, Algeria
[3] Departement of Automation, University M'Hamed Bougara, Independance Avenue, 35000-Boumerdes, Algeria
[4] Department of Electrical and Computer Engineering, King Abdulaziz University, Jeddah, Saudi Arabia

E-mail: nac.meziane@gmail.com, webster@engr.wisc.edu, attari.mo@gmail.com and ajnimunkar@wisc.edu

Received 29 November 2012, accepted for publication 17 July 2013
Published 23 August 2013
Online at stacks.iop.org/PM/34/R47

Abstract
Patient biopotentials are usually measured with conventional disposable Ag/AgCl electrodes. These electrodes provide excellent signal quality but are irritating for long-term use. Skin preparation is usually required prior to the application of electrodes such as shaving and cleansing with alcohol. To overcome these difficulties, researchers and caregivers seek alternative electrodes that would be acceptable in clinical and research environments. Dry electrodes that operate without gel, adhesive or even skin preparation have been studied for many decades. They are used in research applications, but they have yet to achieve acceptance for medical use. So far, a complete comparison and evaluation of dry electrodes is not well described in the literature. This work compares dry electrodes for biomedical use and physiological research, and reviews some novel systems developed for cardiac monitoring. Lastly, the paper provides suggestions to develop a dry-electrode-based system for mobile and long-term cardiac monitoring applications.

Keywords: dry electrode, ECG, impedance, noise, amplifier, bioelectrode, gel

(Some figures may appear in colour only in the online journal)

1. Introduction

As reported by the World Health Organization (WHO), cardiovascular diseases (CVDs) are the principal cause of death globally (De Luna 1999, Dondi and Mut Bastos 2012). Circulatory disease (such as heart attacks and stroke) is responsible for 30% of deaths throughout the world (more than 15 million deaths per year) (De Luna 1999). Cardiovascular disease, including

0967-3334/13/090047+23$33.00 © 2013 Institute of Physics and Engineering in Medicine Printed in the UK & the USA

aoslan@electrosurgellc.com - February 16, 2023 - Read articles at www.DeepDyve.com

Masimo Ex. 1043
IPR Petition - US D883,279

stroke, is the leading cause of mortality in the USA (40% of all deaths in 1995). In all Western countries, ischemic heart disease accounts for the majority of deaths from heart disease. Low- and middle-income countries are disproportionally affected, since more than 80% of cardiac deaths take place in these countries and occur almost equally in men and women. According to current trends, it is expected that by 2030, more than 23 million people will die from CVDs; coronary artery disease (CAD) and strokes are projected to remain the single leading causes of death (Dondi and Mut Bastos 2012). The increase of ischemic heart disease will continue until 2020, mainly due to the large increase in developing countries and economies in transition (De Luna 1999). Although still the most prevalent of all forms of CVD, CAD has declined over the last few decades in developed countries due to the introduction of prevention strategies. The rate of decline could be accelerated further by means of effective education programmes to reduce the associated risk factors (De Luna 1999). Individuals can reduce their risk of CVDs by changes in lifestyle, for example, by engaging in physical activity, avoiding tobacco use and choosing a healthy diet. However, these preventive measures are often incomplete or insufficient and take time to have a clinical impact, while there are also other risk factors, such as diabetes, which cannot be totally under the patient's control.

Some developed and developing countries are also facing a significant problem because of the ageing of their population. DeVol and Bedroussian (2007), in their Executive Summary and Research Findings, stated that the incidence of stroke is rising, in large part because more people are surviving to old age. Considering the costs related to the management of CVD in the elderly population, as well as the associated co-morbidities, this increasing incidence seen in developed and in low-to-middle income nations is an extremely important issue with economic implications that physicians, governments and health care providers will need to face (Dondi and Mut Bastos 2012).

In order to diagnose cardiovascular disease and check its development, if any, measuring electrocardiogram remains an efficient technique and a clinical practice that records the electrical activity of the heart. Usually, electrocardiogram monitoring and heart rate are carried out in a hospital or at a doctor's office. The measurement location is evolving from an intensive care unit all the way to a homecare setting, as a consequence of the fast development of medical devices and modern emerging technologies. The ultimate objective is to assist patients far from the hospital, without interrupting their daily life activities. Notably, out-of-hospital care decreases the high cost of prolonged in-hospital care (Park and Jayaraman 2010), and special attention should be given to patient comfort, biocompatibility and operability by all types of patients, especially elderly and disabled people.

The most commonly used bioelectrode in cardiology is the silver/silver chloride (Ag/AgCl) type. It can be found in a reusable form, but is most often used as a disposable electrode (Searle and Kirkup 2000). Usually, the caregiver applies these disposable electrodes on specific sites of the skin, and then has to replace them after several hours of usage on different sites, to avoid skin irritation or redness. For prolonged monitoring, researchers and doctors seek a new alternative that can overcome these problems, but with the same diagnostic efficiency. Dry electrodes seem to be a good alternative, but still need more quantitative assessment to be accepted for clinical application.

Many publications have examined dry electrodes. Geddes and Valentinuzzi (1973) reported that the first to study the impedance of dry electrodes was probably Lewes (1965). He demonstrated the possibility of recording comparable electrocardiograms with dry polished and gelled electrodes after about 6 min of application. Most papers did not compare gel and dry electrodes, but the following three papers did compare between gel and dry electrodes. The lack of standard measurement methods combined with human variability makes an objective comparison difficult. Searle and Kirkup (2000) compared gel, dry and insulating

aoslan@electrosurgellc.com - February 16, 2023 - Read articles at www.DeepDyve.com

Masimo Ex. 1043
IPR Petition - US D883,279

electrodes. They evaluated the impedance and noise performance. They demonstrated that dry and insulating electrodes perform better than the Ag/AgCl gel electrode if correctly shielded. However, the intrinsic noise was not evaluated and the paper was limited to only two specific electrode realizations. Chi *et al* (2010) reviewed dry, insulated and noncontact electrodes for clinical use and provided their electrical models. Internal noise was analyzed for several materials. But the data published in this paper were limited to a few electrode materials. Gandhi *et al* (2011) examined new, inexpensive and nonirritating materials implemented as dry and noncontact electrodes. Noise was assessed and their experiments showed that acceptable ECG signals were obtained. They demonstrated that nontraditional electrode materials would become increasingly important for medical use by offering comfortable, wireless and wearable sensors.

Most publications comparing dry electrodes to gel electrodes, or comparing different kinds of dry electrodes, are qualitative studies. Several articles compare dry and gel electrodes. Many others suggest ways to improve the dry electrodes' performance. Each author designs a new protocol that limits the generalization of his/her findings to a unique dry electrode. Considering a protocol that characterizes a new dry electrode by the evaluation of motion artifact seems an efficient tool. Searle and Kirkup (2000) examined motion artifact for dry electrodes and found that artifact levels for dry electrodes were significantly higher than those for wet type at the beginning of conducted trials and decreasing with time. Wiese *et al* (2005) developed a protocol to evaluate degraded electrodes by adopting specific movements such as raise hands above the head and touch fingertips, reach arms in front of the body and then move them back, rotate side to side at hips once, cough and yawn. This work reviews the most relevant publications on dry electrodes that can suggest how to design a new dry-electrode-based system.

2. Background

The limits of conventional electrodes in some specific applications provide much room to investigate novel alternatives that could perform better. The reasons to replace gel–electrodes in the medical environment are then discussed.

Ag/AgCl electrodes in disposable form are widely used in medical applications (Carim 1988). The construction process and characteristics are well described (McAdams 2006, Webster 2010). For brief recordings, gel electrodes provide excellent signal quality. Tam and Webster (1977) noted that the gel and adhesive can provoke skin irritation because of the presence of toxic compounds or sensitizing ingredients at a high concentration, but these are not common in modern electrodes. Adhesive tape reactions have been ascribed to mechanical irritation and, to a lesser degree, chemical irritation, but the main irritation may be due to tearing off a thin layer of skin upon removal.

The repeated application of gel-electrodes leads to allergic contact dermatitis. A few reports of allergic contact dermatitis from ECG-monitoring electrodes showed positive reactions to more than one ingredient contained in the electrode (gel and adhesive). Uter and Schwanitz (1996) assumed that repeated shaving (dry, blade) prior to the application of electrodes may have nicked the skin and facilitated sensitization. Avenel-Audran *et al* (2003) reported positive reactions from both the adhesive and the gel. Their patients did not react to propylene glycol, which is a major component of the gel. The allergens are most commonly associated with contact allergic reactions to electrode gels. The positive patch test result to p-tert-butylphenolformaldehyde resin (PTBP-F-R) in their patients was 0.03 mg to the adhesive and 0.1 mg to the gel. They assumed that the presence of propylene glycol in the gel enhanced

aoslan@electrosurgellc.com - February 16, 2023 - Read articles at www.DeepDyve.com

Masimo Ex. 1043
IPR Petition - US D883,279

the penetration of PTBP-F-R from the gel into the skin. Thus, it is good practice to change the electrode sites daily.

Tam and Webster (1977) showed that prior skin abrasion at the electrode site improves the quality of biopotential recording by minimizing skin impedance and motion artifacts that cause changes in the skin potential. They quantified reduction with skin abrasion by counting the sandpaper abrasion strokes. However, physically abrading the skin to reduce motion artifacts is controversial. Olson *et al* (1979) indicated that skin abrasion is more important for brief ECG recordings such as treadmill tests than for chronic ECG monitoring. Abrasion causes substantial reductions in electrode–skin impedance, particularly at low frequencies.

Gel and dry electrodes are subject to noise, interference and motion artifact at different levels. Dry electrodes are severely affected by motion artifacts right after the application, but after a short settling time for perspiration to fill the skin–electrode gap, they have less noise than the gel electrode (Searle and Kirkup 2000). The following section provides an overview on noise, interference and motion artifact in order to understand their origins and how gel and dry electrodes are affected.

- Due to the increasing use of cellular phones, computers and other digital electronics, high frequency (HF) interference has become an increasing problem for both gel and dry electrodes. Both the electrode wires and the patient pick up HF signals. Shielding the amplifier input leads or using a passive low-pass filter at the amplifier input reduces interference (Van der Host *et al* 1998).
- Some health care organizations have banned the use of cellular phones in certain areas such as intensive care units, operating rooms and cardiac catheterization laboratories to avoid any electromagnetic interference (EMI), which may hinder the interpretation of data or cause equipment to malfunction. Cellular telephones modulate their power output on the basis of the strength of the incoming signal from the cellular tower. A typical cellular telephone emits up to 0.600 W (Tri *et al* 2001, 2005). Tri *et al* (2005) tested a subset of medical devices found in a clinical or hospital environment with the presence of cellular telephones in locations that were assumed to be vulnerable (typically serial ports, cable connection ports or display interfaces). Their experiments revealed that interference occurred in 44% of the tested devices, especially those displaying ECG or EEG waveforms. The farthest distance where the EMI interaction occurred was between 0 and 32 inches (0–81 cm), which commonly appeared as the presence of noise on the baseline (Tri *et al* 2001). The authors stated that the technology changes made by the medical device manufacturers and the cellular telephone manufacturers appeared to have progressively mitigated the effect of EMI. Claesson and Nilsson (2003) stated the existence of interference in the most internationally widespread cellular telephone system GSM. An interfering signal, generated due to the switching nature of the TDMA cellular telephone system, is crystal generated and accurately known. It consists of the fundamental frequency and its harmonics. The fundamental switching rate is approximately 217 Hz when the mobile makes one radio access to the base station. An electromagnetic field pulsating with this frequency and its harmonics disturbs the microphone signal, as well as the electronic equipment in the vicinity (within 1–2 m) (Claesson and Rossholm 2005).
- One of the major problems in recording biopotentials is the unwanted 50/60 Hz interference. The source of this interference is the ac power-line potential that is unavoidably present in any clinical application. Electric and magnetic fields can be reduced by using shielding with any highly conducting surface material and ferromagnetic material, respectively (Huhta and Webster 1973). The level of power-line interference is proportional to the imbalance between the electrode-to-skin impedance for the measurement electrodes (e_1, e_2): $\Delta Z = \Delta Z_{e1} - Z_{e2}$. The implementation of a buffer at the electrode sites, to

aoslan@electrosurgellc.com - February 16, 2023 - Read articles at www.DeepDyve.com

Masimo Ex. 1043
IPR Petition - US D883,279

build an active electrode, provides much less emphasis on the skin-to-electrode impedance and considerably reduces the power-line interference (Fernandez and Pallas-Areny 1996). The driven-right-leg (DRL) circuit used to reduce common mode interference affects the differential mode in an unpredictable way and can increase the differential mode interference (Gomez-Clapers *et al* 2011). Adli and Yamamoto (1998) showed that the manual matching of the contact impedances using capacitors in parallel with a potentiometer can reduce the power-line interference to a low value, namely about 1% of the initial value, without using the DRL circuit or skin abrasion.

- Charge sensitivity is not reported much in the literature; it is a major problem for dry and insulating electrodes. Bergey *et al* (1971) described the electrodes as acting 'as an electrometer'. The charge sensitivity of the devices is due to their high input impedance. Insulating electrodes are most affected by this effect. Searle and Kirkup (2000) reported that the gel electrode also suffers from this artifact. Moreover, insulated electrodes, used without shielding, were influenced by a moving electric charge more than the dry electrode types, but not as much as gel electrodes. Dry electrodes performed the best in the presence of a moving electric charge even in the absence of shielding.
- The epidermis plays the most important role in the electrode-to-skin interface. This layer, which is considered a membrane, is semipermeable to ions. But after abrasion it can regenerate in as short a time as 24 h (Webster 2010). The outer layer of the epidermis, the stratum corneum, is a layer of dead cells (Yamamoto and Yamamoto 1976b). Its thickness varies between 20 and 70 μm. Motion artifact results primarily from mechanical stretching of the skin and also from disturbances of the distribution of charge at the electrode–electrolyte interface (Webster 2010). The skin electric conduction did not change during the stretch. The baseline shift is caused by changes in the skin potential during mechanical deformation (Burbank and Webster 1978). The potentials generated by skin stretch and EMG noise are the greatest sources of artifact remaining in well-designed monitoring systems. EMG artifact can often be reduced by proper electrode placement away from muscles and low-pass filtering without creating signal distortion (De Talhouet and Webster 1996, Abächerli and Schmid 2009). Motion artifact has been a problem in biopotential measurements at low frequencies, which is severe when the exercise electrocardiogram ECG is recorded (Tam and Webster 1977). Motion artifact is increased when improper ECG electrodes are used, when there is patient movement, poor mechanical attachment or drying out of the gel, poor electrode placement and poor adherence of the electrodes to the skin surface (Wiese *et al* 2005). Motion artifact becomes a much more pressing problem for dry electrodes because of the absence of gel.
- In research studies, arrays of electrodes are widely used. The size of electrodes becomes a critical parameter in their design. However, the use of gel could create a conductive path between adjacent electrodes and then short circuit the array of electrodes or a portion of it. As a remedy, dry electrodes would easily overcome this issue because initially there is no moisture that can short circuit the array of electrodes (Lin *et al* 2011).

3. Dry electrode-to-skin electrical model

Analyzing the difference between gel and dry electrodes by modeling may lead to a better understanding of their behavior. A model can help to design a practical dry electrode which may perform similar to a gel electrode.

In the case of dry electrodes, the perspiration accumulated after several minutes of their application to the skin progressively overcomes the absence of the electrolyte, which is

aoslan@electrosurgellc.com - February 16, 2023 - Read articles at www.DeepDyve.com

Masimo Ex. 1043
IPR Petition - US D883,279

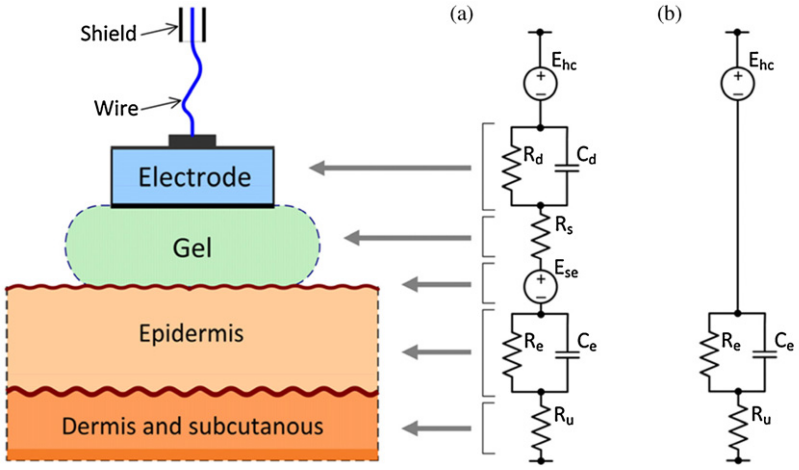

Figure 1. Electrical model for electrode-to-skin interface: (a) gel electrode and (b) dry electrode.

mainly sodium chloride (Yamamoto and Yamamoto 1976a). Yamamoto and Yamamoto (1977) reported that the skin impedance, for various reasons, changes in a complex fashion: with season, time, circumstances and the electrode gel, if used. For low-frequency biopotentials, the resistance is the major source of the observed impedance changes. Perspiration has two main effects: (1) the electrolyte penetrates into the pores of the stratum corneum, which becomes more conductive, (2) with the accumulation of perspiration beneath the dry electrode's surface, the electrode becomes moisturized. This electrolyte (perspiration) increases the effective electrode surface area. Gondran *et al* (1995) described the behavior of the dry electrode–skin interface in a simple way. They stated that the static resistance and capacitance of the stratum corneum resulted from the parallel combination of the static resistance and capacitance of the lipid matrix and the pores.

Webster (2010) modeled the electrical connection between an electrode and the skin using the electrolyte gel. The series resistance R_s is the effective resistance associated with interface effects of the gel between the electrode and the skin. The potential difference E_{se}, which is given by the Nernst equation, is due to the semipermeability of the stratum corneum. The epidermal layer behaves as a parallel *RC* circuit. The dermis and the subcutaneous layer under it behave, in general, as pure resistances. They generate negligible dc potentials. However, the electrical connection between a dry electrode and the skin is different due to the absence of the electrolyte gel. Chi *et al* (2010) proposed an electrical model for dry contact electrodes where only the electric connection corresponding to the gel electrolyte is omitted. Figure 1 shows the equivalent circuit of the electrode-to-skin interface for both the gel and dry electrodes. A few minutes after the application of dry electrodes on the skin, perspiration takes place. The perspiration gradually replaces the gel electrolyte function leading to similar behavior of dry and gel electrodes.

4. Dry electrodes in cardiology

Numerous designs of dry electrodes are cited in the literature. Promising results were shown despite an issue that has not been resolved yet, which is how to hold the electrode in place without the movement that causes motion artifact. The following presents an extensive review

aoslan@electrosurgellc.com - February 16, 2023 - Read articles at www.DeepDyve.com

Masimo Ex. 1043
IPR Petition - US D883,279

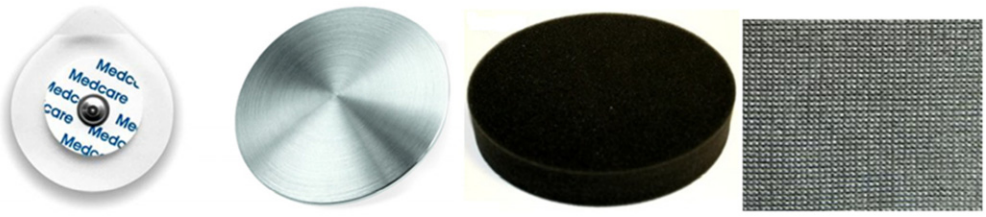

(a) (b) (c) (d)

Figure 2. Electrode categories: (a) conventional Ag/AgCl, (b) stainless-steel disc, (c) conductive foam and (d) conductive fabric.

of dry electrode development. It only describes work that presented complete studies and details, which could best lead to a practical dry-electrode-based system. Figure 2 shows samples of dry electrodes classified as (b) stiff material (metal disc), (c) soft/flexible material (conductive polymer and foam) and (d) fabric electrode. Research studies investigated similar dry electrode designs and showed similar findings were grouped together in the same section.

4.1. Stiff material dry electrodes

Numerous metals were used as dry electrodes. A variety of tests were conducted to assess the electrode performance. Single electrode-to-skin interface impedance was measured to electrically characterize the behavior of the interface electrode-to-skin using various methods as shown in table 1 (Spach *et al* 1966, Searle and Kirkup 1999, Grimnes and Martinsen 2008).

To overcome the sensitivity of the metal-disc electrode to power-line interference, a buffer was used to form active electrodes (Fernandez and Pallas-Areny 1996, Ribeiro *et al* 2011, Nishimura *et al* 1992). Table 1 shows that Matsuo *et al* (1973) developed a new active-capacitive dry electrode. Their experiments showed that the noise level is mostly due to the amplifier. Its drawback is the generation of excess noise voltage if the electrode is mechanically stressed.

Many studies used stainless steel because of its availability, price and good electrical performance. Bergey *et al* (1971) reported that stainless-steel active dry electrodes performed the best and provided considerable reduction of motion artifact. Geddes and Valentinuzzi (1973) investigated different materials such as stainless steel and silver. They found that dry electrodes are really dry when first applied. De Luca *et al* (1979) used stainless-steel active electrodes. Their electrode was used clinically every day for eight months and showed good results. Godin *et al* (1991) used the stainless-steel dry electrode. Their results showed that the thermal noise, generated as a result of the resistive component of the electrode/electrolyte impedance, is not amplifier design dependent. Searle and Kirkup (2000) compared three electrode types: metal, insulating and gel electrodes. Stainless steel is more commonly available and aluminum has been shown to have problems due to the chemical response of its oxide to perspiration. The dry type initially fared the worst compared to gel and insulating types, but after a settling time, not specified, they performed marginally the best in movement artifact tests. The drawbacks of active electrodes include bulk, more wires, higher power consumption and expense, which are challenging for continuous monitoring. However, capacitive electrodes are suitable only for short-term ECG measurement because their dielectric properties are susceptible to change with the presence of perspiration and the erosion of the dielectric substance. They are also susceptible to artifacts (De Luca *et al* 1979), as they are hard and can

aoslan@electrosurgellc.com - February 16, 2023 - Read articles at www.DeepDyve.com

Masimo Ex. 1043
IPR Petition - US D883,279

Table 1. Metal-disc dry electrodes comparison.

Reference/year	Material investigated	Geometric form	Bandwidth	Noise	Findings	Comments
Bergey *et al* (1971)	Silver, gold, stainless steel, anodized aluminum, aluminum brass	2.5 cm diameter, 5 cm distance in between	0.05 Hz to 5 kHz	Intrinsic noise 10 μV_{p-p}, stepping up artifact	Remarkably reproducible response for each metal, signal of noisy nature (anodized aluminum), best behavior for stainless steel	10 min after application, used buffering
Matsuo *et al* (1973) (EEG, ECG)	Barium titanate ceramics (0.02 μF, 0.01 dielectric loss), one side silver coating	9 mm diameter, 0.25 mm thick, 3 mm thick (dry active electrode)	0.01 Hz to 10 kHz	Noise voltage measurement (0.1–70 Hz), electrical artifacts	Noise voltage 4 μV_{p-p}, electrode noise <4 μV_{p-p}, less sensitive to electrical artifacts, absence of noise voltage	dc resistance $>10^{14}$ Ω
De Luca (1979) (Myoelectric signal)	Stainless steel	4.5 mm diameter 10 mm apart	dc to 100 kHz	>75 dB/60 Hz	No use of gel or paste, no reported problems during eight months of daily use in clinics	Used buffering (unity gain amplifier), skin swabbed with rubbing alcohol
Gondran *et al* (1995) (biolelectric signals) Yacoub *et al* (1995)	NASICON–ceramic material ($Na_3Zr_2Si_2PO_{12}$)	Thicknesses 2 and 3 mm, 7 and 10 mm diameter, 5 cm distance in between	1–1000 Hz	Electrochemical noise origin (skin–electrode interface) 1–100 Hz higher noise (>thermal noise of electrode impedance real part + amplifier noise contribution)	5 mV dc voltage (1 min settling time), EMF drift <3.5 mV (2 pairs), dc polarization <35 mV (pair of electrodes) <1 kΩ 10 Hz impedance (10 mm diameter and 1 mm thick	Good conductor through Na^+ ions, robust, shock resistant, great endurance, easy to clean, reusable, skin cleaned (alcohol)

aoslan@electrosurgellc.com - February 16, 2023 - Read articles at www.DeepDyve.com

Masimo Ex. 1043
IPR Petition - US D883,279

Table 1. (Continued.)

Reference/year	Material investigated	Geometric form	Bandwidth	Noise	Findings	Comments
Searl and Kirkup (2000)	Metals: aluminum, stainless steel, titanium	12 mm diameter 14 mm between their centers	1–950 Hz (57 Hz presented)	50/60 Hz examination, moving electric charge, movement artifact	Impedance decreasing exponentially respectively, titanium performs the best	Used buffering (forearm), after 15 min lower sensitivity to electric charge (dry in shield/no shield cases), after 15 min dry performs the best
	Insulating: high purity silicon wafer+150 nm layer of silicon dioxide				Unshielded: suffers from moving charge artifact	
	Disposable: Red Dot ™ 2258 Ag/AgCl	Standard form			Suffers from moving charge artifact	No buffering used, first performs better, lower contact impedance (1/2 surface area: metals and insulating)

aoslan@electrosurgellc.com - February 16, 2023 - Read articles at www.DeepDyve.com

Masimo Ex. 1043
IPR Petition - US D883,279

slip over the skin, which causes loss of contact and charging effects (Gruetzmann *et al* 2007). Their high prices (thousands of dollars) limit their use to only research laboratories.

Metting Van Rijn *et al* (1996) developed a low-cost thick-film technology active electrode. Their device contains a small battery powered front end where the analogue-to-digital conversion was performed, and digitally transmitted with a fiber-optic link to the signal-processing hardware (PC). The use of fiber-optics suppressed the 50 Hz interference in both ECG and EEG signals. Vanlerberghe *et al* (2011) designed a needle-based dry electrode addressing the problem of contacting hairy body areas. However, the use of needle electrodes may cause hygienic and safety concerns. But because these novel electrodes are disposable, this would limit their use to only a limited time and are, therefore, practically a less attractive design.

However, Lisy (2013) developed reusable Ag/AgCl coated ABS (acrylonitrile butadiene styrene) dry electrodes with pointed bumps to reduce motion artifacts. The electrodes are integrated in the CardioWare harness which includes traditional ECG cables. The electrode pointed bumps locally compress the patient's skin underneath each electrode and creates a conductive and mechanical interface with the patient's skin. The electrode is a recent design under investigation; we have found that the pointed bumps result in irritation of the skin.

Gondran *et al* (1995) used ceramic to fabricate dry electrodes based on NASICON-type ceramic. They had good endurance but were slightly polarizable and suffered from low-frequency noise of electrochemical origin. Yacoub *et al* (1995) assessed the noise of the NASICON electrode. They found that the electrode-to-skin interface generates electrochemical noise in excess of the thermal noise associated with the real part of the electrode impedance plus the amplifier noise contribution at low frequencies (1–100 Hz).

4.2. Soft/flexible material dry electrodes

A stable electrode-to-skin interface contact is helpful for a dry electrode. Stiff material dry electrodes suffer from motion artifact due to the absence of gel. Body motion enables the electrodes to move relative to the skin (Hoffmann and Ruff 2007). Researchers have developed flexible or soft electrodes which adapt quickly to the body shape that may reduce motion artifacts. In the following section, some complete works investigating soft electrodes are reviewed for which the most detailed are described in table 2. Similar soft dry electrode designs and findings were grouped in the same section.

A recent idea that seems promising for soft electrodes is the use of foam. The mechanical softness and better adhesion to skin of the foam substrate can also increase the contact area of the skin-to-electrode interface to maintain lower impedance and exhibit better behavior in reducing motion artifacts. Gruetzmann *et al* (2007) designed an Ag-coated conductive polymer foam soft electrode. Their experiments showed that the E103/XAC foam electrodes exhibited comparable impedance to Ag/AgCl gel electrodes on both hairy skin and hairless skin.

Some work was attempted to emphasize the feasibility of comfortable materials as dry/noncontact electrodes. Chi *et al* (2010) reviewed most publications written on dry/noncontact electrodes. They investigated a cotton-based dry electrode and found that a cotton electrode does not create electrochemical noise. They found it difficult to make an objective comparison between electrodes when they measured motion artifacts. Gandhi *et al* (2011) investigated dry and noncontact electrode materials. They found that a solder mask was able to provide relatively low-noise signals due to its high capacitance. The cotton electrode was noisy within ECG/EEG frequencies due to its low capacitance but still provided an acceptable signal. Excellent signals may be obtained with HASL PCB finish (lead-free hot air surface leveled PCB finish).

aoslan@electrosurgellc.com - February 16, 2023 - Read articles at www.DeepDyve.com

Masimo Ex. 1043
IPR Petition - US D883,279

Table 2. Soft/flexible dry electrode comparison.

Authors	Electrode constitution	Geometric form	Bandwidth	Noise	Findings	Comments
Hoffmann *et al* (2006) (Biopotential)	Polarizable metals (silver, gold, platinum, iridium) Nonpolarizable metals (galvanized and sintered Ag/AgCl, platinum black) Polymer-coated metals (PEDOT (poly-3, 4-ethylenedioxythiophene) on gold, iridium and platinum, polypyrrole on gold and iridium) Conductive polymer paste (silver, carbon) Nanoparticles in polysiloxane (silver, carbon, doped tin oxide)	Square of 1 cm^2	0.1 Hz–100 kHz	—	Polysiloxane exhibits a more capacitive character, best results for electrodes coated with a conductive polymer layer, constant impedance for sintered Ag/AgCl electrodes (ten days), small phase angle for high frequencies, better long-term stability for PEDOT	128 electrodes could be measured simultaneously ten days measurements of electrode impedance
Gruetzmann *et al* (2007) (ECG)	Dry Ag foil Conductive foam (polyester, polyethylene), titanium as an adhesion layer (100 nm thick)	2 cm diameter 0.3 mm thick 2 cm diameter	30 Hz–100 kHz	Motion artifact (walking motion) 5 min settling time	Less motion artifact for dry foam, zero-line fluctuation suppression for SiO_2 electrode, capacitive electrode suitable for short-term ECG, low skin-electrode impedance for dry foam/SiO_2 electrode	Dry Ag partly chloride foam coated (400 nm thick silver) Skin cleaned (propanol) Velcro strap handling

aoslan@electrosurgellc.com - February 16, 2023 - Read articles at www.DeepDyve.com

Masimo Ex. 1043
IPR Petition - US D883,279

Table 2. (Continued.)

Authors	Electrode constitution	Geometric form	Bandwidth	Noise	Findings	Comments
	Capacitive electrode (SiO_2)	1–4 cm^2 (rectangular) 15–100 nm thick SiO_2				
Baek *et al* (2008) (ECG)	PDMS (substrate), titanium (adhesion layer), gold pattern (center)	10 mm wide × 3 mm thick 1.5 mm high of curved metal pattern PDMS layer 14 mm between centers	1 Hz to 1 kHz 0.5–100 Hz for acquisition	Motion (treadmill exercise) (5 km h^{-1})	<100 Hz higher impedance than Ag/AgCl electrode >100 Hz similar values, more sensitive to motion artifact, stable ECG signal (one week), no skin irritation (one week)	Within 30 s settling time, fixed cable on the body, metal pattern width (10 μm), impedance measurement (one day)
Pylatiuk *et al* (2009) (EMG)	Polysiloxane (nanoparticles), polysiloxane (carbon 9 Ω cm^{-1}), polysiloxane (carbon thread 2.8 Ω cm^{-1}), polyamide thread (silver coating 0.2 Ω cm^{-1}) (textile), thermoplastic elastomer (silver-coated, glass 0.01 Ω cm^{-1})	2 cm diameter 3 cm apart	100 Hz 10–500 Hz for acquisition	5 min settling time Repeated After 60 min Elbow flexion of 90° without/with 1–7 kg weights	0.98 high correlation for polysiloxane (carbon thread 2.8 Ω cm^{-1}) after 5 min, 0.97–0.98 high correlation for all polysiloxane after 60 min, 0.76 decreased correlation for polyamide thread after 60 min, no correlation with thermoplastic elastomer in both cases, low SNR for thermoplastic elastomer for 5/60 min, worst impedance for polysiloxane (carbon thread 9 Ω cm^{-1})	Impedance measurement 16 times within 3 h, polyamide thread (textile electrode) saturated with electrolyte dilution
Chi *et al* (2010) (ECG, EMG)	Thin film, cotton dry metal plate, MEMS Ag/AgCl	—	0.7–100 Hz	Motion artifacts (sitting, walking, running, jumping), noise measurement	Poor settling time (noncontact electrodes), recovery times >10 s (noncontact electrode), R-wave distortion (cotton electrode), no electrochemical noise for cotton electrode	Difficult to make an objective comparison between electrodes

aoslan@electrosurgellc.com - February 16, 2023 - Read articles at www.DeepDyve.com

Masimo Ex. 1043
IPR Petition - US D883,279

The use of polydimethylsiloxane (PDMS) was cited in some works because of its inert nature. Baek *et al* (2008) presented a novel polymeric dry electrode (PDMS). The electrode would be wearable around the forearm using a Velcro strap. In exercising tests, the PDMS electrode suffers from motion artifact, because of its high impedance and the unstable connection between the electrode wire and the ECG cable. The PDMS electrode was worn for a period of one week without irritation. Optical microscopy showed microcracks which increase the electrical resistance of the PDMS electrode. Fernandes *et al* (2010) presented a new flexible dry PDMS-coated copper electrode. The PDMS is packaged into a wearable bracelet. A settling time of 5–10 min was required to reach an adequate signal-to-noise ratio. Thus, PDMS-based electrodes also showed good long-term stability and the absence of negative influence on the skin due to the chemically inert nature of PDMS. Myllymaa *et al* (2012) developed a novel flexible thin film micropillar electrode with significantly improved electrochemical properties. Differently coated PDMS electrodes, with titanium, copper, silver, silver–silver chloride in a physiological saline solution (0.9% NaCl), were characterized by the use of electrical impedance spectroscopy and equivalent circuit modeling. Their measurements were reproducible and show that titanium is not a suitable coating material for biomedical electrodes, since it possesses high impedance magnitude levels in saline. Their findings affirmed that micropillar structuring effectively lowered impedance for each coating material due to the increased surface area. Ag/AgCl is an almost perfectly nonpolarizable material particularly at low frequencies (1–700 Hz) and behaves much more resistively. However, further investigations are necessary during *in vivo* testing for bioelectric signals. Ribeiro *et al* (2011) developed a flexible active dry electrode based on the di-ureasil polymer. The electrodes were held in place by a Velcro stretch belt. The dry active electrode showed less sensitivity to 50 Hz power-line interference and remained chemically and electrically stable for one week of exposure to a synthetic perspiration. The di-ureasil electrode is more sensitive to motion artifact and showed some mechanical problems such as cracking of the material when it dried and in some cases, degellification of the material occurred. Prats-Boluda *et al* (2012) developed a new modular active sensor containing disposable concentric ring electrodes, with enhanced spatial resolution, printed on a flexible polymeric substrate (UltemR16SG00) by thick-film technology connected to a reusable battery-powered signal-conditioning circuit. Their results showed that flexible concentric ring electrodes not only present lower skin–electrode contact impedance and lower baseline wander than rigid electrodes but are also less sensitive to interference and motion artifacts. However, these electrodes are still more susceptible to motion artifact and noisier recordings were noticed compared to those from commercial wet Ag/AgCl electrodes.

Polysiloxane is cited by several authors to design soft dry electrodes. Hoffmann *et al* (2006) characterized 16 different materials divided into five groups. Their experiments showed that for low frequencies, polysiloxane with nanoparticles shows, by far, the highest impedance. The best results are obtained from the electrodes coated with a layer of a conductive polymer. PEDOT is considered to have better long-term stability. Hoffmann and Ruff (2007) investigated a surface electrode material based on a medically approved polysiloxane framework loaded with conductive nanoparticles. A general purpose electrolyte part was added to the mix ultimately to have a highly viscous and flexible material which can improve the electrode-to-skin impedance when used as a dry electrode. Biocompatibility tests showed that the novel electrode is biocompatible. The mechanical and electrochemical properties of the electrodes were unchanged after washing tests. Pylatiuk *et al* (2009) investigated five electrode materials; three of them consisted of various types of flexible Pt-catalyzed polysiloxane. The three polysiloxane electrodes showed a considerable decrease in the electrode-to-skin impedance

aoslan@electrosurgellc.com - February 16, 2023 - Read articles at www.DeepDyve.com

Masimo Ex. 1043
IPR Petition - US D883,279

within the first 20 min. Nevertheless, the signal quality of all three polysiloxane electrodes was good within 5 min after attaching them to the skin.

Flexible/soft electrodes could be integrated into garments. Fuhrhop *et al* (2009) investigated dry electrodes and developed a textile that integrates a two-channel ECG system. A bicycle ergometer test showed that the dry-based system used with a QRS detection algorithm performed well. However, a well-fitting textile garment and intelligent algorithms are still needed to minimize movement artifacts. They noted that wearable devices failed if hard/capacitive dry electrodes were used. Slipping on the skin and charging effects limited their use compared to Holter systems using gel electrodes. Muhlsteff and Such (2004) used flexible conductive rubber dry electrodes. These electrodes were integrated into textiles. A settling time from 3 to 15 min was enough to get a clean ECG signal with a sufficient signal-to-noise ratio. Asian skin type has a lower impedance signal than Caucasian-skin types, and the corresponding ECG was immediately picked up after the rubber electrodes' application.

4.3. Fabric dry electrodes

Newer recording approaches with textile-integrated dry electrodes would improve over bulkiness and skin irritation of Holter systems with gel electrodes. However, an inferior quality signal was produced due to the high electrode-to-skin impedance and motion artifact (Catrysse *et al* 2004). For this reason, these ECG systems have failed to establish themselves as sufficient in the medical environment (Fuhrhop *et al* 2009). Park and Jayaraman (2010) reviewed the field of smart textile-based wearable biomedical systems (ST-WBSs). The authors have analyzed the issues that slow down the acceptance of the ST-WBSs to the market and suggest a plan of action to encourage their acceptance. Fabric electrodes are generally mounted in smart garments. This section will describe some textile dry-electrode designs recently published. Work that showed consistent comparisons is represented in table 3.

Marozas *et al* (2011) investigated reusable electroconductive textile-based electrodes. Electrodes were slightly moistened with water to reduce the settling time. The tests showed that textile electrodes are less susceptible to broadband noise, but produce significantly more noise in the band of 0.05–0.67 Hz. Marquez *et al* (2010) used textile dry electrodes to measure body composition analysis. The inner surface of the electrodes was based on synthetic wrap knitted textile material with silver fiber. Resulting differences may be due to the extended electrode area or the larger resistance of the textile electrodes. Monitoring vital signs in a pool environment is an important field to monitor swimmer activities or patients. Silva *et al* (2009) designed textile electrodes intended to be used in a swimsuit. Comparable results were found for the developed textile electrodes and the reference ones. Their experiments showed that the R wave was clearly displayed. A significant deterioration of signals was noticeable when the electrode was stretched.

Recent advancements in microelectronics and electronics lead to the integration of an entire ECG monitoring system within a small patch. Dry electrodes that were screen-printed directly onto fabric were designed to eliminate wires and skin irritation and to ensure low-power consumption (few mW). Yoo *et al* (2009) fabricated a planar printed circuit on fabric. The shirt-type clothing system can continuously operate and collect data from the body up to 14 days without replacing the battery. Their results showed amplitude distortion due to the higher impedance of the fabric dry electrodes. These electrodes were used again by Yoo *et al* (2010), who examined two wireless fabric patch sensors inductively powered. However, no practical results were shown. These remote sensors are disposable and expensive which limit their use only for research.

aoslan@electrosurgellc.com - February 16, 2023 - Read articles at www.DeepDyve.com

Masimo Ex. 1043
IPR Petition - US D883,279

Table 3. Fabric dry electrode comparison.

Authors	Electrode constitution	Geometric form	Bandwidth	Noise	Findings	Comments
Paradiso *et al* (2005) (ECG, Respiration, activity)	Two stainless steel wires twisted around a viscose textile yarn Ag/AgCl	—	30 Hz	Walking on the spot, mechanical tests, washing tests	Signal comparisons to reference electrodes, quality signal preserved if washed	Using hydrogel membrane (dynamic conditions) 5–8 h of membrane wearing
Puurtinen *et al* (2006) (ECG)	Polyester yarns covered with silver	7, 10, 15, 20, 30 mm diameters, 30 mm diameter (ground)	0.05–500 Hz	RMS noise	Higher noise for dry textile, most reliable behavior (hydrogel)	10 to 15 min stabilizing time Tests taken 5 min after electrode placement
Silva *et al* (2009) (ECG)	Bekintex Bare elastane Silver-coated yarns (reference)	× 2 cm squares	—	Humidity tests Electrode stretching Motion artifact	R-wave clearly displayed Significant deterioration when electrode stretched	Use in swimsuit, water as electrolyte gel
Marozas *et al* (2011) (ECG)	Thin silver–nylon 117/17 2-ply conductive thread	Rectangular 16 cm^2 25 cm apart	0–250 Hz	Elliptical trainer motion	0 to 0.67 Hz noise produced 0 to 250 Hz less broadband noise produced	Mounted on chest belt Moistening of textile electrode 5 min settling time

aoslan@electrosurgellc.com - February 16, 2023 - Read articles at www.DeepDyve.com

Masimo Ex. 1043
IPR Petition - US D883,279

The use of conductive knitted yarn to form integrated sensors was cited in many studies. The drawback of this technology is the high cost due to the knitting and interconnecting processes of the conductive yarn in addition to the production of the clothing itself. Another issue that remains unresolved is the packaging of the electronics when washing is needed. Paradiso *et al* (2005) designed an intelligent garment based on knitted integrated sensors. The garment integrates sensors, connections and electrodes, which were created with conductive and piezoresistive yarns. Scilingo *et al* (2005) found that conductive yarns and coated fabrics are resistant to repeated washing in aqueous solutions without decreasing their performance and without a polarization effect. However, the use of a hydrogel membrane to reduce the contact resistance between the skin and the electrode can provoke skin irritation; because of this, the membrane can be worn only for 5–8 h. The reproducibility of the sensitive spot positioning in the garment represents a critical point, especially for precordial leads. The deterioration of the signal-to-noise ratio produced by the micromovements of electrodes has been neutralized by using hydrogel membranes for only short time use. Puurtinen *et al* (2006) also used a hydrogel membrane in textile electrodes. Three electrode preparations were set: dry textile electrode, textile electrode moistened with water and textile electrode covered with hydrogel membrane. Their results showed that textile electrodes with hydrogel provided the most reliable behavior. The highest noise level was encountered with dry textile electrodes.

5. Amplifiers for a dry-electrode system

Most publications on dry-electrode-based systems focused on the design of the electrode itself. But a few research groups designed the whole amplifier in order to set system specifications, such as the amplifier input impedance, bias current, voltage offset and others. Available standards are devoted to gel-based electrode systems, which require less stringent specifications than for dry-electrode-based systems. This section emphasizes the electronic design of dry-electrode-based systems.

Considering biotelemetry and long-term Holter monitor environments, biosignal acquisition is performed on subjects in areas of high electromagnetic fields, where high common-mode voltages could saturate the input amplifier stages. Reducing the number of electrodes would make patient attachment easier and lower electrode costs. The two-electrode technique has the advantage of improving patient safety by eliminating the patient ground electrode. But the amplifier will then transform common-mode interference signals to differential signals. Additional electronics were added to the amplifier in order to cancel these differential-mode interferences (Hwang and Webster 2008, Thakor and Webster 1980, Dobrev and Daskalov 2002). The two-dry-electrode technique was used by Richard and Chan (2010) to monitor the heart rate and ECG and by Bifulco *et al* (2011) to pick up ECG, EMG and body motions using integrated textile electrodes in a wearable garment. Neither author group assessed the noise, which is important to quantify the feasibility of the two-electrode amplifier with dry electrodes. A solution to reduce magnetic interferences is to mount the dry electrodes directly on a flexible printed circuit board. The flexible system allows adaptation to different chest morphologies. The issue with this design is that distances between electrodes are different from one subject to another and are variable due to the skin's tendency to stretch (Figueiredo *et al* 2010). The flexible system could produce more motion artifact because body expansion would drag electrodes along the skin. In the context of reducing the number of leads, Gargiulo *et al* (2013) designed a biopotential front end capable of recording unipolar ECG leads without the use of the Wilson central terminal. The unipolar recording showed immunity from the contact impedance imbalance by design. The amplifier could be used for both gel and dry electrodes. Their results showed that some extra peaks are only visible from

aoslan@electrosurgellc.com - February 16, 2023 - Read articles at www.DeepDyve.com

Masimo Ex. 1043
IPR Petition - US D883,279

the right-arm recording, which are hidden by the traditional differential ECG. Their findings may open some new diagnostic opportunities which still need to be investigated. The system also allows direct, real-time software calculation of signals corresponding to standard ECG leads. The device only requires a power less than 20 mW.

The use of dry electrodes was also explored in some particular applications, such as physical exercise, pool environment and underwater monitoring. Gargiulo *et al* (2010b) designed a dry silicone–rubber ECG system with a Bluetooth connection to monitor the heart during several physical tasks and submersion in fresh water. The amplifier was built around the Burr–Brown INA116 instrumentation amplifier which has an input impedance of $10^{15}/0.2$ (Ω/pF). The authors measured the input referred noise power spectral density of the biopotential amplifier and its dry electrodes. Silva *et al* (2009) developed textile electrodes mounted in a swimsuit to be used in a pool environment, where the INA129 was used as an instrumentation amplifier. A strong EMG signal interfered with the ECG signal. Signal processing was needed to clearly recover the heart beat. The newest system can continuously operate for more than seven days (Gargiulo *et al* 2010a, 2010b, 2010d). Gargiulo *et al* (2010c) monitored the ECG of cattle and pregnant subjects where experiments showed equivalent signals to Ag/AgCl conventional systems. The correlation between the recordings was greater than 0.96.

The above studies used single-chip instrumentation amplifiers in their designs. Instrumentation amplifiers in general have high input impedance, high CMRR and low bias current. For more than a decade, a research group within the Department of Electronic and Electrical Engineering, from Trinity College, Dublin (Ireland) has designed a dry-electrode preamplifier based on the use of operational amplifiers to set up standards and minimal specifications for the dry-electrode preamplifier. The authors emphasized the study of factors that affect the quality of the ECG signal. These factors are: the skin-to-electrode-amplifier interface, electrode motion artifact, electrical interference, amplifier CMRR, amplifier frequency response, semiconductor noise generated in the amplifier and input signal level variation (Burke and Gleeson 2000). First, the instrumentation amplifier was constructed around three CMOS op-amps TLC27L4CN from Texas Instruments intended for use with portable dry-electrode ECG-based heart rate monitors (Burke 1994). In later work, the design was extended to use six MAX400 series (Maxim Inc.) op-amps. The electrical characteristics were measured: input impedance of 75 MΩ, CMRR of 88 dB when the DRL circuit was used, a peak-to-peak noise voltage (referred to the amplifier input) of 50 μV and a power consumption of 30 μW (Burke and Gleeson 1999, 2000). The preamplifier was improved later. The input impedance increased to 280 MΩ at 0.05 Hz, the CMRR was greater than 80 dB and the power consumption decreased to 20 μW as a micropower device (Burke and Assambo 2007). Continuously, the differential input impedance of the six op-amp preamplifier increased to 340 MΩ at 0.05 Hz and the CMRR exceeded 85 dB (Assambo and Burke 2007). It would be helpful if a comparison with a single-chip instrumentation amplifier (LT1167: input impedance of $10^{12}/1.6$ (Ω/pF) and CMRR of 95 dB) were done to show if there are benefits, especially in portable devices where dealing with power consumption is of great importance.

6. Practical design considerations

The main issue with dry electrodes is the high skin-to-electrode impedance; two approaches have been taken to reduce its effect. The common practice at clinics is skin abrasion of the outermost cells of the skin surface to obtain a low contact resistance (5–10 kΩ) (Marozas *et al* 2011, Chi *et al* 2010). Another approach is to use a high input impedance amplifier to lessen

aoslan@electrosurgellc.com - February 16, 2023 - Read articles at www.DeepDyve.com

Masimo Ex. 1043
IPR Petition - US D883,279

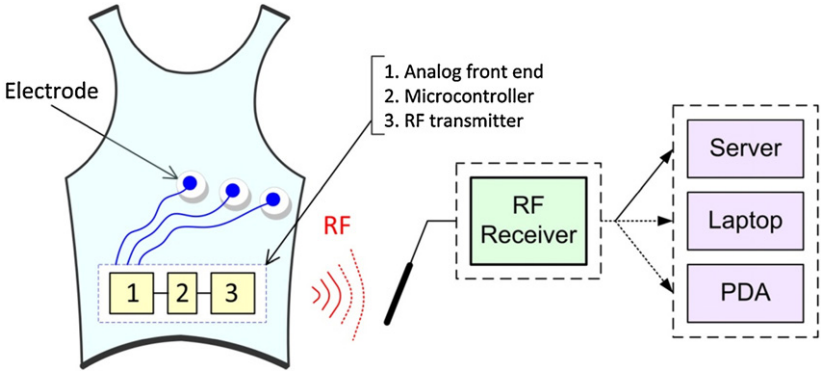

Figure 3. Practical design of a dry-electrode system.

the emphasis given to the skin-to-electrode impedance. The last approach may be the best solution.

Broadly speaking, even though there were a considerable number of results and designs that when combined may provide an efficient dry-electrode system, no successful dry-electrode system is manufactured and accepted by clinical institutions. Below we provide suggestions that can help to design a low-power and low-cost system with irritation and motion artifact free dry electrodes. Figure 3 shows a practical design of a dry-electrode system that combines the analogue front end, microcontroller and Bluetooth embedded in the same board mounted in a stretchy shirt.

- Flexible electrodes made with polymer or foam combined with the excellent characteristics and biocompatibility of a titanium foil (Schaldach 1992) partly resolve the problem of adherence between the skin and electrode because of their softness. Compact and hermetic skin-to-electrode contact reduces motion artifacts. Electrodes mounted on a stretched shirt made of Spandex will strengthen the electrode-to-skin contact and minimize wire artifacts.
- Use of a single-chip instrumentation amplifier, characterized by low-power consumption and low noise, is beneficial in battery-powered embedded devices. Recent circuit development integrates the whole front end in one chip which saves time and is easy to implement. The ADS1191 is characterized by a high CMRR of 95 dB and micropower of 335 μW/channel. The AD8232 provides a CMRR of 80 dB and a low supply current of 180 μA.
- The DRL amplifier used to reduce the common mode interference can affect the differential mode in an unpredictable way and can increase the differential mode interference. The novel system will be battery powered, and the use of the DRL amplifier can be disregarded to save power and space (Gomez-Clapers *et al* 2011).
- The use of a microcontroller with wireless communication is stress free for patients, including elderly people who can pursue their daily life activities with more confidence. The preamplifier and the microcontroller should be built as surface-mounted components to save power and space because the system will be mounted on a stretchy shirt. Light weight and comfort are the key parameters for a successful design.
- Data should continuously be sent to a personal computer or a mobile phone. Further signal processing to implement in computers may help to detect arrhythmia or syncope in a timely fashion. In addition, if a subject is moving and causes movement artifacts,

aoslan@electrosurgellc.com - February 16, 2023 - Read articles at www.DeepDyve.com

Masimo Ex. 1043
IPR Petition - US D883,279

the system switches to measure heart beats which can be extracted from the ECG plus movement artifacts.

- Waterproofing the electronic board and the dry electrodes is necessary in special applications, such as when the patient is exercising, which may make him perspire a lot, or is in a wet environment. The perspiration or water may short circuit the electrode contacts or wet the electronic board.
- Additional considerations should be taken during the design process, such as careful design of the PCB layout, successful shielding of electrodes and the use of shielding cables, which would increase the immunity of the system in the presence of different types of noise and interference that could affect its performance.

7. Conclusion

Stiff material, soft/flexible material and fabric dry electrodes were investigated. In the case of stiff material dry electrodes, active electrodes overcome the sensitivity to power-line interference, but they are bulky and expensive. However, stainless steel, available and cheap, showed good electrical performances when used as a dry electrode. The needle-based dry electrode performed best on a hairy body area but may cause hygienic and safety concerns. The NASICON-type ceramic electrode had good endurance but suffered from low-frequency noise of electrochemical origin. The tough nature of stiff material makes the electrode more susceptible to motion artifact.

Soft electrodes have appeared to resolve issues encountered with the stiff material dry electrodes, precisely the sensitivity to motion artifact. The authors agreed that the soft electrode adapts quickly to the body shape, which exhibits better behavior in reducing motion artifacts by improving the electrode-to-skin interface contact. For example, E103/XAC foam, polydimethylsiloxane (PDMS), UltemR16SG00, polysiloxane loaded with conductive nanoparticles, Pt-catalyzed polysiloxane, conductive rubber and cotton were successful materials in reducing the electrode to skin impedance. PDMS and polysiloxane were proved to be biocompatible. The cotton dry electrode does not create electrochemical noise. For some designs, a coating material is necessary to improve the conductivity of the electrode. Ag/AgCl, an almost perfectly nonpolarizable material, is found to be a suitable coating material for biomedical electrodes. However, PDMS and di-ureasil showed some mechanical problems such as cracking of the material, which increases the electrical resistance of the electrode. In addition, UltemR16SG00 was more susceptible to motion artifact and noise compared to gel Ag/AgCl electrodes.

Fabric electrodes are generally mounted on smart garments to improve over-bulkiness and skin irritation of Holter systems with gel electrodes. The fabric electrode has usually a larger contact area and high impedance of the fabric, which may result in some differences in the signal's amplitude, such as synthetic wrap knitted textile material with silver fiber and planar printed circuit on fabric. In addition, significant deterioration of signals was noticeable when a textile electrode was stretched. The use of conductive knitted yarn is a high-cost technology. In some designs, a hydrogel membrane was used to reduce the contact resistance between the skin and the electrode and neutralize the micromovements of electrodes which deteriorate the signal-to-noise ratio. The membrane can provoke skin irritation which limits its use to only 5–8 h, but textile electrodes with hydrogel provided the most reliable behavior. Conductive yarns and coated fabrics are resistant to repeated washing without decreasing their performance and without a polarization effect. The highest noise level was encountered with dry textile electrodes which produce more noise in a low-frequency domain. Another issue that remains

aoslan@electrosurgellc.com - February 16, 2023 - Read articles at www.DeepDyve.com

Masimo Ex. 1043
IPR Petition - US D883,279

unresolved is the packaging of the electronics when washing is needed. The reproducibility of the sensitive spot positioning in the garment represents a critical point, especially for precordial leads.

Every dry electrode category has its advantages and disadvantages known in the literature. The authors agreed that the main issue that slows down the spread of the dry electrode in the clinical environment is the poor electrode-to-skin contact which initially leads to higher impedance and more susceptibility to motion artifact. A settling time of few minutes is necessary to have a readable signal, depending on the nature of the electrode. The metal-disc electrode presents good electrical performance but suffers from a tough substrate leading to the movement of the electrode on the skin. The fabric electrode is characterized by a larger contact area leading to amplitude distortion. In fact, the fabric electrode is more susceptible to motion artifact and more noisy than other electrodes. The metal-disc electrical characteristic and the fabric flexibility are found in the flexible electrode. Flexible electrodes were investigated in the recent decade; the number of researchers investigating them is progressively increasing. The flexible electrode showed better performance, especially the conductive foam coated with silver/silver chloride which adapts quickly to the body's shape, to improve the electrode-to-skin contact. The validity of every design was tested by the authors, who described their specific protocol and used it to test their design. The absence of a unique and universal testing protocol is obvious, even an objective comparison is very difficult to conduct. Consequently, making some particular movements to test a new dry-electrode design referenced by Wiese *et al* (2005) seems to be a complete evaluation to determine the electrode's response when stressed by some movements practiced in daily life activities.

For clinical application, Ag/AgCl gel electrodes are convenient in terms of robustness, cost and ability to adhere to the skin well. The signal provided is excellent for monitoring and diagnostic purposes. In fact, dry electrodes are not used in clinical applications. However, dry electrodes may be suitable for situations where the patients have sensitive, damaged or burned skin, for neonatal patients or where ambulatory monitoring is desired.

To develop a practical dry-electrode system, much emphasis should be given to the electrode design itself. If motion artifact and high electrode-to-skin contact impedance issues could be resolved, clinical professionals might use dry electrodes. There is much room for innovation at the electrode-to-skin contact level where more contributions are expected to yield improved contact.

Reviewing dry-electrode systems, highlighted in this paper, suggests work on a novel dry-electrode design. We are focusing on how to improve the electrode-to-skin contact with low cost and minimum treatment. We hope that other research groups could cooperate to also contribute in this field. Significant contributions towards designing a practical dry-electrode system would result in diagnosing patients earlier and improving the quality of people's medical care and lives.

Acknowledgment

NM was supported by a fellowship from the Algerian Ministry of Higher Education and Scientific Research (MESRS).

References

Abächerli R and Schmid H J 2009 Meet the challenge of high-pass filter and ST-segment requirements with a DC-coupled digital electrocardiogram amplifier *Electrocardiology* **42** 574–9

aoslan@electrosurgellc.com - February 16, 2023 - Read articles at www.DeepDyve.com

Masimo Ex. 1043
IPR Petition - US D883,279

Adli and Yamamoto Y 1998 Impedance balancing analysis for power-line interference elimination in ECG signal *Proc. IEEE Instrum. Meas. Technol. Conf.* pp 235–8

Assambo C and Burke M J 2007 An improved very-low power pre-amplifier for use with un-gelled electrodes in ECG recording *Biol. Biomed. Eng.* **1** 25–31 (available at: www.naun.org/multimedia/NAUN/bio/bio-4.pdf)

Avenel-Audran M, Goossens A, Zimerson E and Bruze M 2003 Contact dermatitis from electrocardiograph-monitoring electrodes: role of p-tert-butylphenol-formaldehyde resin *Contact Dermatitis* **48** 108–11

Baek J Y, An J H, Choi J M, Park K S and Lee S H 2008 Flexible polymeric dry electrodes for the long-term monitoring of ECG *Sensors Actuators* A **143** 423–9

Bergey G E, Squires R D and Sipple W C 1971 Electrocardiogram recording with pasteless electrodes *IEEE Trans. Biomed. Eng.* **BME-18** 206–11

Bifulco P, Cesarelli M, Fratini A, Ruffo M, Pasquariello G and Gargiulo G 2011 A wearable device for recording of biopotentials and body movements *MeMeA: Proc. IEEE Int. Workshop on Medical Measurements and Applications* pp 469–72

Burbank D P and Webster J G 1978 Reducing skin potential motion artifact by skin abrasion *Med. Biol. Eng. Comput.* **16** 31–38

Burke M J 1994 Low-power ECG amplifier/detector for dry-electrode heart rate monitoring *Med. Biol. Eng. Comput.* **32** 678–83

Burke M J and Assambo C 2007 An improved micro-power pre-amplifier for dry-electrode ECG recording *Proc. Int. Conf. on Circuits* pp 234–9 (available at: www.wseas.us/e-library/conferences/2007cscc/papers/561-286.pdf)

Burke M J and Gleeson D T 1999 An ultra-low power pre-amplifier for pasteless electrocardiography *Proc. IEEE. Int. Conf. on Electronics, Circuits and Systems* vol 2 pp 615–9

Burke M J and Gleeson D T 2000 A micropower dry-electrode ECG preamplifier *IEEE Trans. Biomed. Eng.* **47** 155–62

Carim H M 1988 Bioelectrodes *Encyclopedia of Medical Devices and Instrumentation* vol 1 ed J G Webster (New York: Wiley-Interscience) pp 195–226

Catrysse M, Puers R, Hertleer C, Van Langenhove L, Van Egmond H and Matthys D 2004 Towards the integration of textile sensors in a wireless monitoring suit *Sensors Actuators* A **114** 302–11

Chi Y M, Jung T P and Cauwenberghs G 2010 Dry-contact and noncontact biopotential electrodes: methodological review *IEEE Rev. Biomed. Eng.* **3** 106–19

Claesson I and Nilsson A 2003 Cancellation of humming GSM mobile telephone noise *ICICS-F'CM: Proc. 2003 Joint Conf. of the 4th Int. Conf. on Information, Communications and Signal Processing and 4th Pacific-Rim Conf. on Multimedia* vol 1 pp 114–8

Claesson I and Rossholm A 2005 Notch filtering of humming GSM mobile telephone noise *ICICS: Proc. 5th Int. Conf. on Information, Communications and Signal Processing* pp 1320–3

De Luca C J, Le Fever R S and Stulen F B 1979 Pasteless electrode for clinical use *Med. Biol. Eng. Comput.* **17** 387–90

De Luna A B 1999 The role of the World Heart Federation *Eur. Heart. J.* **20** 562–6

De Talhouet H and Webster J G 1996 The origin of skin-stretch-caused motion artifacts under electrodes *Physiol. Meas.* **17** 81–93

DeVol R and Bedroussian A 2007 *An Unhealthy America: The Economic Burden of Chronic Disease* (Santa Monica, CA: Milken Institute) pp 1–38 (available at: www.milkeninstitute.org/healthreform/pdf/AnUnhealthyAmericaExecSumm.pdf)

Dobrev D and Daskalov I 2002 Two-electrode biopotential amplifier with current-driven inputs *Med. Biol. Eng. Comput.* **40** 122–7

Dondi M and Mut Bastos F 2012 *Nuclear Cardiology: Its Role in Cost Effective Care* (*IAEA Human Health Series* vol 18) (Vienna: IAEA) pp 2075–3772 (available at: www-pub.iaea.org/MTCD/publications/PDF/Pub1516_web.pdf)

Fernandes M S, Lee K S, Ram R J, Correia J H and Mendes P M 2010 Flexible PDMS-based dry electrodes for electro-optic acquisition of ECG signals in wearable devices *Proc. Annu. Int. Conf. IEEE Eng. Med. Biol. Soc.* pp 3503–6

Fernandez M and Pallas-Areny R 1996 Simple active electrode for power line interference reduction in high resolution biopotential measurements *Proc. Annu. Int. Conf. IEEE Eng. Med. Biol. Soc.* vol 1 pp 97–98

Figueiredo C P, Becher K, Hoffmann K P and Mendes P M 2010 Low power wireless acquisition module for wearable health monitoring systems *Proc. Annu. Int. Conf. IEEE Eng. Med. Biol. Soc.* pp 704–7

Fuhrhop S, Lamparth S, Kirst M, Wagner G V and Ottenbacher J 2009 Ambulant ECG recording with wet and dry electrodes: a direct comparison of two systems *World Congress on Medical Physics and Biomedical Engineering* vol 25/5 (Berlin: Springer) pp 305–7

Gandhi N, Khe C, Chung D, Chi Y M and Cauwenberghs G 2011 Properties of dry and non-contact electrodes for wearable physiological sensors *Proc. Int. Conf. on Body Sensor Networks* pp 107–12

Gargiulo G, Bifulco P, Cesarelli M, Jin C, McEwan A and Van Schaik A 2010a Wearable dry sensors with Bluetooth connection for use in remote patient monitoring systems *Stud. Health Technol. Inform.* **161** 57–65

aoslan@electrosurgellc.com - February 16, 2023 - Read articles at www.DeepDyve.com

Masimo Ex. 1043
IPR Petition - US D883,279

Gargiulo G, Bifulco P, Cesarelli M, Ruffo M, Romano M, Calvo R A, Jin C and Schaik A V 2010b An ultra-high input impedance ECG amplifier for long-term monitoring of athletes *Med. Devices: Evidence Res.* **3** 1–9

Gargiulo G, Calvo R A, Bifulco P, Cesarelli M, Jin C, Mohamed A and Van Schaik A 2010d A new EEG recording system for passive dry electrodes *Clin. Neurophysiol.* **121** 686–93

Gargiulo G D, McEwan A L, Bifulco P, Cesarelli M, Jin C, Tapson J, Thiagalingam A and Van Schaik A 2013 Towards true unipolar bio-potential recording: a preliminary result for ECG *Physiol. Meas.* **34** N1–N7

Gargiulo G *et al* 2010c Dry electrode bio-potential recordings *Proc. Annu. Int. Conf. IEEE Eng. Med. Biol. Soc.* pp 6493–6

Geddes L A and Valentinuzzi M E 1973 Temporal changes in electrode impedance while recording the electrocardiogram with dry electrodes *Ann. Biomed. Eng.* **1** 356–67

Godin D T, Parker P A and Scott R N 1991 Noise characteristics of stainless-steel surface electrodes *Med. Biol. Eng. Comput.* **29** 585–90

Gomez-Clapers J, Serrano-Finetti E, Casanella R and Pallas-Areny R 2011 Can driven-right-leg circuits increase interference in ECG amplifiers? *Proc. Annu. Int. Conf. IEEE Eng. Med. Biol. Soc.* pp 4780–83

Gondran C, Siebert E, Fabry P, Novakov E and Gumery P Y 1995 Non-polarisable dry electrode based on NASICON ceramic *Med. Biol. Eng. Comput.* **33** 452–7

Grimnes S and Martinsen O G 2008 *Bioimpedance and Bioelectricity Basics* 2nd edn (Oxford: Elsevier)

Gruetzmann A, Hansen S and Muller J 2007 Novel dry electrodes for ECG monitoring *Physiol. Meas.* **28** 1375–90

Hoffmann K P and Ruff R 2007 Flexible dry surface electrodes for ECG long-term monitoring *Proc. Annu. Int. Conf. IEEE Eng. Med. Biol. Soc.* pp 5739–42

Hoffmann K P, Ruff R and Poppendieck W 2006 Long-term characterization of electrode materials for surface electrodes in biopotential recording *Proc. Annu. Int. Conf. IEEE Eng. Med. Biol. Soc.* pp 2239–42

Huhta J C and Webster J G 1973 60-Hz Interference in electrocardiography *IEEE Trans. Biomed. Eng.* **BME-20** 91–101

Hwang I D and Webster J G 2008 Direct interference canceling for two-electrode biopotential amplifier *IEEE Trans. Biomed. Eng.* **55** 2620–7

Lewes D 1965 Electrode jelly in electrocardiography *Brit. Heart* **27** 105–15

Lin C T, Liao L D, Liu Y H, Wang I J, Lin B S and Chang J Y 2011 Novel dry polymer foam electrodes for long-term EEG measurement *IEEE Trans. Biomed. Eng.* **58** 1200–7

Lisy F J 2013 The bumps have it when it comes to CardioWare *Med. Design* **13** 14–8

Marozas V, Petrenas A, Daukantas S and Lukosevicius A 2011 A comparison of conductive textile-based and silver/silver chloride gel electrodes in exercise electrocardiogram recordings *Electrocardiology* **44** 189–94

Marquez J C, Ferreira J, Seoane F, Buendia R and Lindecrantz K 2010 Textile electrode straps for wrist-to-ankle bioimpedance measurements for body composition analysis. Initial validation and experimental results *Proc. Annu. Int. Conf. IEEE Eng. Med. Biol. Soc.* pp 6385–8

Matsuo T, Iinuma K and Esashi M 1973 A barium-titanate-ceramics capacitive-type EEG electrode *IEEE Trans. Biomed. Eng.* **BME-20** 299–300

McAdams E 2006 Bioelectrodes *Encyclopedia of Medical Devices and Instrumentation* vol 1 2nd edn ed J G Webster (New York: Wiley-Interscience) pp 120–66

Metting Van Rijn A C, Kuiper A P, Dankers T E and Grimbergen C A 1996 Low-cost active electrode improves the resolution in biopotential recordings *Proc. Annu. Int. Conf. IEEE Eng. Med. Biol. Soc.* vol 1 pp 101–2

Muhlsteff J and Such O 2004 Dry electrodes for monitoring of vital signs in functional textiles *Proc. Annu. Int. Conf. IEEE Eng. Med. Biol. Soc.* vol 1 pp 2212–5

Myllymaa S, Pirinen S, Myllymaa K, Suvanto M, Pakkanen T A, Pakkanen T T and Lappalainen R 2012 Improving electrochemical performance of flexible thin film electrodes with micropillar array structures *Meas. Sci. Technol.* **23** 1–11

Nishimura S, Tomita Y and Horiuchi T 1992 Clinical application of an active electrode using an operational amplifier *IEEE Trans. Biomed. Eng.* **39** 1096–9

Olson W H, Schmincke D R and Henley B L 1979 Time and frequency dependence of disposable ECG electrode-skin impedance *Med. Instrum.* **13** 269–72 PMID: 502923

Paradiso R, Loriga G and Taccini N 2005 A wearable health care system based on knitted integrated sensors *IEEE Trans. Inf. Technol. Biomed.* **9** 337–44

Park S and Jayaraman S 2010 Smart textile-based wearable biomedical systems: a transition plan for research to reality *IEEE Trans. Inf. Technol. Biomed.* **14** 86–92

Prats-Boluda G, Ye-Lin Y, Garcia-Breijo E, Ibanez J and Garcia-Casado J 2012 Active flexible concentric ring electrode for non-invasive surface bioelectrical recordings *Meas. Sci. Technol.* **23** 1–10

Puurtinen M M, Komulainen S M, Kauppinen P K, Malmivuo J A V and Hyttinen J A K 2006 Measurement of noise and impedance of dry and wet textile electrodes, and textile electrodes with hydrogel *Proc. Annu. Int. Conf. IEEE Eng. Med. Biol. Soc.* pp 6012–15

aoslan@electrosurgellc.com - February 16, 2023 - Read articles at www.DeepDyve.com

Masimo Ex. 1043
IPR Petition - US D883,279

Pylatiuk C, Müller–Riederer M, Kargov A, Schulz S, Schill O, Reischl M and Bretthauer G 2009 Comparison of surface EMG monitoring electrodes for long-term use in rehabilitation device control *Proc. Int. Conf. IEEE Rehabilitation Robotics* pp 300–4

Ribeiro D M D, Fu L S, Carlos L A D and Cunha J P S 2011 A novel dry active biosignal electrode based on an hybrid organic–inorganic interface material *IEEE Sensors* **11** 2241–5

Richard E and Chan A D C 2010 Design of a gel-less two-electrode ECG monitor *MeMeA: Proc. IEEE Int. Workshop on Medical Measurements and Applications* pp 92–96

Schaldach M 1992 *Electrotherapy of the Heart: Technical Aspects in Cardiac Pacing* (New York: Springer) pp 178–82

Scilingo E-P, Gemignani A, Paradiso R, Taccini N, Ghelarducci B and De Rossi D 2005 Performance evaluation of sensing fabrics for monitoring physiological and biomechanical variables *IEEE Trans. Inf. Technol. Biomed.* **9** 345–52

Searle A and Kirkup L 1999 Real time impedance plots with arbitrary frequency components *Physiol. Meas.* **20** 103–14

Searle A and Kirkup L 2000 A direct comparison of wet, dry and insulating bioelectric recording electrodes *Physiol. Meas.* **21** 271–83

Silva M, Catarino A, Carvalho H, Rocha A, Monteiro J and Montagna G 2009 Study of vital sign monitoring with textile sensors in swimming pool environment *Proc. Annu. Conf. IEEE Industrial Electronics* pp 4426–31

Spach M S, Barr R C, Havstad J V and Long E C 1966 Skin-electrode impedance and its effect on recording cardiac potentials *Circulation* **34** 649–56

Tam H W and Webster J G 1977 Minimizing electrode motion artifact by skin abrasion *IEEE Trans. Biomed. Eng.* **BME-24** 134–9

Thakor N V and Webster J G 1980 Ground-free ECG recording with two electrodes *IEEE Trans. Biomed. Eng.* **BME-27** 699–704

Tri J L, Hayes D L, Smith T T and Severson R P 2001 Cellular phone interference with external cardiopulmonary monitoring devices *Mayo Clin. Proc.* **76** 11–15

Tri J L, Severson R P, Firl A R, Hayes D L and Abenstein J P 2005 Cellular telephone interference with medical equipment *Mayo Clin. Proc.* **10** 1286–90

Uter W and Schwanitz H J 1996 Contact dermatitis from propylene glycol in ECG electrode gel *Contact Dermatitis* **34** 230–1

Van der Host M J, Metting van Rijn A C, Peper A and Grimbergen C A 1998 High frequency interference effects in amplifiers for biopotential recordings *Proc. Annu. Int. Conf. IEEE Eng. Med. Biol. Soc.* vol 20 pp 3309–12

Vanlerberghe F, De Volder M, De Beeck M O, Penders J, Reynaerts D, Puers R and Van Hoof C 2011 2-scale topography dry electrode for biopotential measurements *Proc. Annu. Int. Conf. IEEE Eng. Med. Biol. Soc.* pp 1892–5

Webster J G (ed) 2010 *Medical Instrumentation: Application and Design* 4th edn (Hoboken, NJ: Wiley)

Wiese S R, Anheie P, Connemara R D, Mollner A T, Neils T F, Kahn J A and Webster J G 2005 Electrocardiographic motion artifact versus electrode impedance *IEEE Trans. Biomed. Eng.* **52** 136–9

Yacoub S, Novakov E, Guméry P Y, Gondran C and Siebert E 1995 Noise analysis of NASICON ceramic dry electrodes *Proc. Annu. Int. Conf. IEEE Eng. Med. Biol. Soc.* vol 2 pp 1553–4

Yamamoto T and Yamamoto Y 1976a Electrical properties of the epidermal stratum corneum *Med. Biol. Eng.* **14** 151–8

Yamamoto T and Yamamoto Y 1976b Dielectric constant and resistivity of epidermal stratum corneum *Med. Biol. Eng.* **14** 494–500

Yamamoto T and Yamamoto Y 1977 Analysis for the change of skin impedance *Med. Biol. Eng. Comput.* **15** 219–27

Yoo H J, Yoo J and Yan L 2010 Wireless fabric patch sensors for wearable healthcare *Proc. Annu. Int. Conf. IEEE Eng. Med. Biol. Soc.* pp 5254–7

Yoo J, Yan L, Lee S, Kim H and Yoo H-J 2009 Wearable ECG acquisition system with compact planar-fashionable circuit board-based shirt *IEEE Trans. Inf. Technol. Biomed.* **13** 897–902

aoslan@electrosurgellc.com - February 16, 2023 - Read articles at www.DeepDyve.com

Masimo Ex. 1043
IPR Petition - US D883,279