AO 120 (Rev. 08/10)

TO: Mail Stop 8 Director of the U.S. Patent and Trademark Office P.O. Box 1450 Alexandria, VA 22313-1450	REPORT ON THE FILING OR DETERMINATION OF AN ACTION REGARDING A PATENT OR TRADEMARK

In Compliance with 35 U.S.C. § 290 and/or 15 U.S.C. § 1116 you are hereby advised that a court action has been filed in the U.S. District Court WESTERN DISTRICT OF TEXAS, WACO DIVISION on the following

☐ Trademarks or ☑ Patents. (☐ the patent action involves 35 U.S.C. § 292.):

DOCKET NO.	DATE FILED	U.S. DISTRICT COURT
6:22-cv-00321	3/25/2022	WESTERN DISTRICT OF TEXAS, WACO DIVISION

PLAINTIFF	DEFENDANT
LS Cloud Storage Technologies, LLC	Microsoft Corporation

PATENT OR TRADEMARK NO.	DATE OF PATENT OR TRADEMARK	HOLDER OF PATENT OR TRADEMARK
1 US 6,549,988	4/15/2003	LS Cloud Storage Technologies, LLC
2 US 10,154,092	12/11/2018	LS Cloud Storage Technologies, LLC
3		
4		
5		

In the above—entitled case, the following patent(s)/ trademark(s) have been included:

DATE INCLUDED	INCLUDED BY ☐ Amendment ☐ Answer ☐ Cross Bill ☐ Other Pleading	
PATENT OR TRADEMARK NO.	DATE OF PATENT OR TRADEMARK	HOLDER OF PATENT OR TRADEMARK
1		
2		
3		
4		
5		

In the above—entitled case, the following decision has been rendered or judgement issued:

DECISION/JUDGEMENT

8/31/2022 Order granting motion to transfer to Austin Division (document #24).

CLERK	(BY) DEPUTY CLERK	DATE
Philip J. Devlin	Juanita Velasquez	08/31/2022

Copy 1—Upon initiation of action, mail this copy to Director **Copy 3—Upon termination of action, mail this copy to Director**
Copy 2—Upon filing document adding patent(s), mail this copy to Director **Copy 4—Case file copy**

AO 120 (Rev. 08/10)

TO:	Mail Stop 8 Director of the U.S. Patent and Trademark Office P.O. Box 1450 Alexandria, VA 22313-1450	REPORT ON THE FILING OR DETERMINATION OF AN ACTION REGARDING A PATENT OR TRADEMARK

In Compliance with 35 U.S.C. § 290 and/or 15 U.S.C. § 1116 you are hereby advised that a court action has been filed in the U.S. District Court Western District of Texas, Waco Division on the following

☐ Trademarks or ☑ Patents. (☐ the patent action involves 35 U.S.C. § 292.):

DOCKET NO.	DATE FILED	U.S. DISTRICT COURT
6:22-cv-00845	8/8/2022	Western District of Texas, Waco Division

PLAINTIFF	DEFENDANT
LS CLOUD STORAGE TECHNOLOGIES, LLC	CISCO SYSTEMS, INC.

	PATENT OR TRADEMARK NO.	DATE OF PATENT OR TRADEMARK	HOLDER OF PATENT OR TRADEMARK
1	US 10,1554,092	12/11/2018	LS CLOUD STORAGE TECHNOLOGIES, LLC
2	US 6.549.988	4/15/2003	LS CLOUD STORAGE TECHNOLOGIES, LLC
3	US 8,225,002	7/17/2012	LS CLOUD STORAGE TECHNOLOGIES, LLC
4			
5			

In the above—entitled case, the following patent(s)/ trademark(s) have been included:

DATE INCLUDED	INCLUDED BY ☐ Amendment ☐ Answer ☐ Cross Bill ☐ Other Pleading	
PATENT OR TRADEMARK NO.	DATE OF PATENT OR TRADEMARK	HOLDER OF PATENT OR TRADEMARK
1		
2		
3		
4		
5		

In the above—entitled case, the following decision has been rendered or judgement issued:

DECISION/JUDGEMENT

CLERK	(BY) DEPUTY CLERK	DATE

Copy 1—Upon initiation of action, mail this copy to Director **Copy 3—Upon termination of action, mail this copy to Director**
Copy 2—Upon filing document adding patent(s), mail this copy to Director **Copy 4—Case file copy**

AO 120 (Rev. 08/10)

TO: Mail Stop 8 Director of the U.S. Patent and Trademark Office P.O. Box 1450 Alexandria, VA 22313-1450	REPORT ON THE FILING OR DETERMINATION OF AN ACTION REGARDING A PATENT OR TRADEMARK

In Compliance with 35 U.S.C. § 290 and/or 15 U.S.C. § 1116 you are hereby advised that a court action has been filed in the U.S. District Court Western District of Texas, Waco Division on the following

☐ Trademarks or ☑ Patents. (☐ the patent action involves 35 U.S.C. § 292.):

DOCKET NO.	DATE FILED	U.S. DISTRICT COURT
6:22-cv-00316	3/25/2022	Western District of Texas, Waco Division

PLAINTIFF	DEFENDANT
LS CLOUD STORAGE TECHNOLOGIES, LLC	AMAZON.COM, INC, AMAZON WEB SERVICES, INC., and AMAZON.COM SERVICES, INC.

	PATENT OR TRADEMARK NO.	DATE OF PATENT OR TRADEMARK	HOLDER OF PATENT OR TRADEMARK
1	US 10,154,092	12/11/2018	LS CLOUD STORAGE TECHNOLOGIES, LLC
2	US 6,549,988	4/15/2003	LS CLOUD STORAGE TECHNOLOGIES, LLC
3			
4			
5			

In the above—entitled case, the following patent(s)/ trademark(s) have been included:

DATE INCLUDED	INCLUDED BY ☐ Amendment ☐ Answer ☐ Cross Bill ☐ Other Pleading	
PATENT OR TRADEMARK NO.	DATE OF PATENT OR TRADEMARK	HOLDER OF PATENT OR TRADEMARK
1		
2		
3		
4		
5		

In the above—entitled case, the following decision has been rendered or judgement issued:

DECISION/JUDGEMENT

CLERK	(BY) DEPUTY CLERK	DATE

Copy 1—Upon initiation of action, mail this copy to Director **Copy 3—Upon termination of action, mail this copy to Director**
Copy 2—Upon filing document adding patent(s), mail this copy to Director **Copy 4—Case file copy**

AO 120 (Rev. 08/10)

TO:	Mail Stop 8 Director of the U.S. Patent and Trademark Office P.O. Box 1450 Alexandria, VA 22313-1450	REPORT ON THE FILING OR DETERMINATION OF AN ACTION REGARDING A PATENT OR TRADEMARK

In Compliance with 35 U.S.C. § 290 and/or 15 U.S.C. § 1116 you are hereby advised that a court action has been filed in the U.S. District Court WESTERN DISTRICT OF TEXAS, WACO DIVISION on the following

☐ Trademarks or ☑ Patents. (☐ the patent action involves 35 U.S.C. § 292.):

DOCKET NO.	DATE FILED	U.S. DISTRICT COURT
6:22-cv-00321	3/25/2022	WESTERN DISTRICT OF TEXAS, WACO DIVISION

PLAINTIFF	DEFENDANT
LS Cloud Storage Technologies, LLC	Microsoft Corporation

PATENT OR TRADEMARK NO.	DATE OF PATENT OR TRADEMARK	HOLDER OF PATENT OR TRADEMARK
1 US 6,549,988	4/15/2003	LS Cloud Storage Technologies, LLC
2 US 10,154,092	12/11/2018	LS Cloud Storage Technologies, LLC
3		
4		
5		

In the above—entitled case, the following patent(s)/ trademark(s) have been included:

DATE INCLUDED	INCLUDED BY ☐ Amendment ☐ Answer ☐ Cross Bill ☐ Other Pleading	
PATENT OR TRADEMARK NO.	DATE OF PATENT OR TRADEMARK	HOLDER OF PATENT OR TRADEMARK
1		
2		
3		
4		
5		

In the above—entitled case, the following decision has been rendered or judgement issued:

DECISION/JUDGEMENT

CLERK	(BY) DEPUTY CLERK	DATE

Copy 1—Upon initiation of action, mail this copy to Director **Copy 3—Upon termination of action, mail this copy to Director**
Copy 2—Upon filing document adding patent(s), mail this copy to Director **Copy 4—Case file copy**

AO 120 (Rev. 08/10)

TO: Mail Stop 8 Director of the U.S. Patent and Trademark Office P.O. Box 1450 Alexandria, VA 22313-1450	REPORT ON THE FILING OR DETERMINATION OF AN ACTION REGARDING A PATENT OR TRADEMARK

In Compliance with 35 U.S.C. § 290 and/or 15 U.S.C. § 1116 you are hereby advised that a court action has been filed in the U.S. District Court Western District of Texas, Waco Division on the following

☐ Trademarks or ☑ Patents. (☐ the patent action involves 35 U.S.C. § 292.):

DOCKET NO.	DATE FILED	U.S. DISTRICT COURT
6:22-cv-00319	3/25/2022	Western District of Texas, Waco Division

PLAINTIFF	DEFENDANT
LS CLOUD STORAGE TECHNOLOGIES, LLC	CISCO SYSTEMS, INC.

	PATENT OR TRADEMARK NO.	DATE OF PATENT OR TRADEMARK	HOLDER OF PATENT OR TRADEMARK
1	US 10,154,092	12/11/2018	LS CLOUD STORAGE TECHNOLOGIES, LLC
2	US 6,549,988	4/15/2003	LS CLOUD STORAGE TECHNOLOGIES, LLC
3	US 8,2215,002	7/17/2012	LS CLOUD STORAGE TECHNOLOGIES, LLC
4			
5			

In the above—entitled case, the following patent(s)/ trademark(s) have been included:

DATE INCLUDED	INCLUDED BY ☐ Amendment ☐ Answer ☐ Cross Bill ☐ Other Pleading	
PATENT OR TRADEMARK NO.	DATE OF PATENT OR TRADEMARK	HOLDER OF PATENT OR TRADEMARK
1		
2		
3		
4		
5		

In the above—entitled case, the following decision has been rendered or judgement issued:

DECISION/JUDGEMENT

CLERK	(BY) DEPUTY CLERK	DATE

Copy 1—Upon initiation of action, mail this copy to Director **Copy 3—Upon termination of action, mail this copy to Director**
Copy 2—Upon filing document adding patent(s), mail this copy to Director **Copy 4—Case file copy**

Organization OPAP/IPD Mail Bldg/Room

United States Patent and Trademark Office
P.O. Box 1450
Alexandria, VA. 22313-1450
If Undeliverable Return in Ten Day

OFFICIAL BUSINESS
PENALTY FOR PRIVATE USE, $300

AN EQUAL OPPORTUNITY EMPLOY

UNITED STATES POSTAGE
PITNEY BOWES
02 1M $ 00.46⁰
0004244945 DEC 06 2017
MAILED FROM ZIP CODE 22314

NIXIE 100 FE 1 0012/14/17
RETURN TO SENDER
ATTEMPTED - NOT KNOWN
UNABLE TO FORWARD
BC: 22313145050 *1892-02685-06-36
1008[illegible]

Google Exhibit 1002
Google v. US Cloud Storage Technologies
IPR2023-00777, Page 6 of 280

OPAP
DEC 1 8 2017
AKIMA-15

UNITED STATES PATENT AND TRADEMARK OFFICE

UNITED STATES DEPARTMENT OF COMMERCE
United States Patent and Trademark Office
Address: COMMISSIONER FOR PATENTS
P.O. Box 1450
Alexandria, Virginia 22313-1450
www.uspto.gov

APPLICATION NUMBER	FILING OR 371(C) DATE	FIRST NAMED APPLICANT	ATTY. DOCKET NO./TITLE
09/236,409	01/22/1999	ILYA GERTNER	

CONFIRMATION NO. 1514

POWER OF ATTORNEY NOTICE

OC000000095890257

7278
DARBY & DARBY P.C.
P.O. BOX 770
Church Street Station
New York, NY 10008-0770

Date Mailed: 12/06/2017

NOTICE REGARDING CHANGE OF POWER OF ATTORNEY

This is in response to the Power of Attorney filed 11/30/2017.

- The Power of Attorney to you in this application has been revoked by the assignee who has intervened as provided by 37 CFR 3.71. Future correspondence will be mailed to the new address of record(37 CFR 1.33).

Questions about the contents of this notice and the requirements it sets forth should be directed to the Office of Data Management, Application Assistance Unit, at **(571) 272-4000** or **(571) 272-4200** or **1-888-786-0101**.

/deelliott/

Google Exhibit 1002
Google v. LS Cloud Storage Technologies
IPR2023-00777, Page 7 of 280

UNITED STATES PATENT AND TRADEMARK OFFICE

UNITED STATES DEPARTMENT OF COMMERCE
United States Patent and Trademark Office
Address: COMMISSIONER FOR PATENTS
P.O. Box 1450
Alexandria, Virginia 22313-1450
www.uspto.gov

APPLICATION NUMBER	FILING OR 371(C) DATE	FIRST NAMED APPLICANT	ATTY. DOCKET NO./TITLE
09/236,409	01/22/1999	ILYA GERTNER	

CONFIRMATION NO. 1514
POWER OF ATTORNEY NOTICE

7278
DARBY & DARBY P.C.
P.O. BOX 770
Church Street Station
New York, NY 10008-0770

OC000000095890257

Date Mailed: 12/06/2017

NOTICE REGARDING CHANGE OF POWER OF ATTORNEY

This is in response to the Power of Attorney filed 11/30/2017.

- The Power of Attorney to you in this application has been revoked by the assignee who has intervened as provided by 37 CFR 3.71. Future correspondence will be mailed to the new address of record(37 CFR 1.33).

Questions about the contents of this notice and the requirements it sets forth should be directed to the Office of Data Management, Application Assistance Unit, at **(571) 272-4000** or **(571) 272-4200** or **1-888-786-0101**.

/deelliott/

Google Exhibit 1002
Google v. LS Cloud Storage Technologies
IPR2023-00777, Page 8 of 280

UNITED STATES PATENT AND TRADEMARK OFFICE

UNITED STATES DEPARTMENT OF COMMERCE
United States Patent and Trademark Office
Address: COMMISSIONER FOR PATENTS
P.O. Box 1450
Alexandria, Virginia 22313-1450
www.uspto.gov

APPLICATION NUMBER	FILING OR 371(C) DATE	FIRST NAMED APPLICANT	ATTY. DOCKET NO./TITLE
09/236,409	01/22/1999	ILYA GERTNER	

CONFIRMATION NO. 1514

POA ACCEPTANCE LETTER

OC000000095890311

60533
TOLER LAW GROUP
TOLER LAW GROUP
8500 BLUFFSTONE COVE
SUITE A201
AUSTIN, TX 78759

Date Mailed: 12/06/2017

NOTICE OF ACCEPTANCE OF POWER OF ATTORNEY

This is in response to the Power of Attorney filed 11/30/2017.

The Power of Attorney in this application is accepted. Correspondence in this application will be mailed to the above address as provided by 37 CFR 1.33.

Questions about the contents of this notice and the requirements it sets forth should be directed to the Office of Data Management, Application Assistance Unit, at **(571) 272-4000** or **(571) 272-4200** or **1-888-786-0101**.

/deelliott/

Google Exhibit 1002
Google v. LS Cloud Storage Technologies
IPR2023-00777, Page 9 of 280

PTO/AIA/80 (07-12)
Approved for use through 11/30/2014. OMB 0651-0035
U.S. Patent and Trademark Office; U.S DEPARTMENT OF COMMERCE
Under the Paperwork Reduction Act of 1995, no persons are required to respond to a collection of information unless it displays a valid OMB control number.

POWER OF ATTORNEY TO PROSECUTE APPLICATIONS BEFORE THE USPTO

I hereby revoke all previous powers of attorney given in the application identified in the attached statement under 37 CFR 3.73(c).

I hereby appoint:

[■] Practitioners associated with Customer Number: 60533

OR

[ ] Practitioner(s) named below (if more than ten patent practitioners are to be named, then a customer number must be used):

Name	Registration Number	Name	Registration Number

As attorney(s) or agent(s) to represent the undersigned before the United States Patent and Trademark Office (USPTO) in connection with any and all patent applications assigned only to the undersigned according to the USPTO assignment records or assignments documents attached to this form in accordance with 37 CFR 3.73(c).

Please change the correspondence address for the application identified in the attached statement under 37 CFR 3.73(c) to:

[■] The address associated with Customer Number: 60533

OR

Firm or Individual Name			
Address			
City		State	Zip
Country			
Telephone		Email	

Assignee Name and Address: LS CLOUD STORAGE TECHNOLOGIES, LLC
911 NW LOOP 281, SUITE 211-44
LONGVIEW, TX 75604

A copy of this form, together with a statement under 37 CFR 3.73(c) (Form PTO/AIA/96 or equivalent) is required to be Filed in each application in which this form is used. The statement under 37 CFR 3.73(c) may be completed by one of The practitioners appointed in this form, and must identify the application in which this Power of Attorney is to be filed.

SIGNATURE of Assignee of Record

The individual whose signature and title is supplied below is authorized to act on behalf of the assignee

Signature		Date	December 19, 2016
Name	BRANDON THOMAS	Telephone	213-595-6177
Title	MANAGER		

This collection of information is required by 37 CFR 1.31, 1.32 and 1.33. The information is required to obtain or retain a benefit by the public which is to file (and by the USPTO to process) an application. Confidentiality is governed by 35 U.S.C. 122 and 37 CFR 1.11 and 1.14. This collection is estimated to take 3 minutes to complete, including gathering, preparing, and submitting the completed application form to the USPTO. Time will vary depending upon the individual case. Any comments on the amount of time you require to complete this form and/or suggestions for reducing this burden, should be sent to the Chief Information Officer, U.S. Patent and Trademark Office, U.S. Department of Commerce, P.O. Box 1450, Alexandria, VA 22313-1450. DO NOT SEND FEES OR COMPLETED FORMS TO THIS ADDRESS. **SEND TO: Commissioner for Patents, P.O. Box 1450, Alexandria, VA 22313-1450.**

If you need assistance in completing the form, call 1-800-PTO-9199 and select option 2.

Privacy Act Statement

The **Privacy Act of 1974 (P.L. 93-579)** requires that you be given certain information in connection with your submission of the attached form related to a patent application or patent. Accordingly, pursuant to the requirements of the Act, please be advised that: (1) the general authority for the collection of this information is 35 U.S.C. 2(b)(2); (2) furnishing of the information solicited is voluntary; and (3) the principal purpose for which the information is used by the U.S. Patent and Trademark Office is to process and/or examine your submission related to a patent application or patent. If you do not furnish the requested information, the U.S. Patent and Trademark Office may not be able to process and/or examine your submission, which may result in termination of proceedings or abandonment of the application or expiration of the patent.

The information provided by you in this form will be subject to the following routine uses:

1. The information on this form will be treated confidentially to the extent allowed under the Freedom of Information Act (5 U.S.C. 552) and the Privacy Act (5 U.S.C 552a). Records from this system of records may be disclosed to the Department of Justice to determine whether disclosure of these records is required by the Freedom of Information Act.
2. A record from this system of records may be disclosed, as a routine use, in the course of presenting evidence to a court, magistrate, or administrative tribunal, including disclosures to opposing counsel in the course of settlement negotiations.
3. A record in this system of records may be disclosed, as a routine use, to a Member of Congress submitting a request involving an individual, to whom the record pertains, when the individual has requested assistance from the Member with respect to the subject matter of the record.
4. A record in this system of records may be disclosed, as a routine use, to a contractor of the Agency having need for the information in order to perform a contract. Recipients of information shall be required to comply with the requirements of the Privacy Act of 1974, as amended, pursuant to 5 U.S.C. 552a(m).
5. A record related to an International Application filed under the Patent Cooperation Treaty in this system of records may be disclosed, as a routine use, to the International Bureau of the World Intellectual Property Organization, pursuant to the Patent Cooperation Treaty.
6. A record in this system of records may be disclosed, as a routine use, to another federal agency for purposes of National Security review (35 U.S.C. 181) and for review pursuant to the Atomic Energy Act (42 U.S.C. 218(c)).
7. A record from this system of records may be disclosed, as a routine use, to the Administrator, General Services, or his/her designee, during an inspection of records conducted by GSA as part of that agency's responsibility to recommend improvements in records management practices and programs, under authority of 44 U.S.C. 2904 and 2906. Such disclosure shall be made in accordance with the GSA regulations governing inspection of records for this purpose, and any other relevant (*i.e.*, GSA or Commerce) directive. Such disclosure shall not be used to make determinations about individuals.
8. A record from this system of records may be disclosed, as a routine use, to the public after either publication of the application pursuant to 35 U.S.C. 122(b) or issuance of a patent pursuant to 35 U.S.C. 151. Further, a record may be disclosed, subject to the limitations of 37 CFR 1.14, as a routine use, to the public if the record was filed in an application which became abandoned or in which the proceedings were terminated and which application is referenced by either a published application, an application open to public inspection or an issued patent.
9. A record from this system of records may be disclosed, as a routine use, to a Federal, State, or local law enforcement agency, if the USPTO becomes aware of a violation or potential violation of law or regulation.

Electronic Acknowledgement Receipt

EFS ID:	31087450
Application Number:	09236409
International Application Number:	
Confirmation Number:	1514
Title of Invention:	DATA STORAGE SYSTEM COMPRISING A NETWORK OF PCS AND METHOD USING SAME
First Named Inventor/Applicant Name:	ILYA GERTNER
Customer Number:	7278
Filer:	Jeffrey G. Toler/Suzanne Nobert
Filer Authorized By:	Jeffrey G. Toler
Attorney Docket Number:	
Receipt Date:	30-NOV-2017
Filing Date:	22-JAN-1999
Time Stamp:	12:36:21
Application Type:	Utility under 35 USC 111(a)

Payment information:

Submitted with Payment	no

File Listing:

Document Number	Document Description	File Name	File Size(Bytes)/ Message Digest	Multi Part /.zip	Pages (if appl.)
1	Assignee showing of ownership per 37 CFR 3.73	6549988_Statement_373_aia0096.pdf	122232 818edd99a921574683201d15044411faaa3b97cd	no	3

Warnings:

Google Exhibit 1002
Google v. LS Cloud Storage Technologies
IPR2023-00777, Page 12 of 280

Information:					
2	Power of Attorney	LS_CLoud_General_POA_signed.pdf	187505 ff95670a6ce4a057a1ba89e9f4735b1b569c5b97	no	2
Warnings:					
Information:					
			Total Files Size (in bytes):	309737	

This Acknowledgement Receipt evidences receipt on the noted date by the USPTO of the indicated documents, characterized by the applicant, and including page counts, where applicable. It serves as evidence of receipt similar to a Post Card, as described in MPEP 503.

New Applications Under 35 U.S.C. 111
If a new application is being filed and the application includes the necessary components for a filing date (see 37 CFR 1.53(b)-(d) and MPEP 506), a Filing Receipt (37 CFR 1.54) will be issued in due course and the date shown on this Acknowledgement Receipt will establish the filing date of the application.
National Stage of an International Application under 35 U.S.C. 371
If a timely submission to enter the national stage of an international application is compliant with the conditions of 35 U.S.C. 371 and other applicable requirements a Form PCT/DO/EO/903 indicating acceptance of the application as a national stage submission under 35 U.S.C. 371 will be issued in addition to the Filing Receipt, in due course.
New International Application Filed with the USPTO as a Receiving Office
If a new international application is being filed and the international application includes the necessary components for an international filing date (see PCT Article 11 and MPEP 1810), a Notification of the International Application Number and of the International Filing Date (Form PCT/RO/105) will be issued in due course, subject to prescriptions concerning national security, and the date shown on this Acknowledgement Receipt will establish the international filing date of the application.

PTO/AIA/96 (08-12)
Approved for use through 01/31/2013. OMB 0651-0031
U.S. Patent and Trademark Office; U.S. DEPARTMENT OF COMMERCE
Under the Paperwork Reduction Act of 1995, no persons are required to respond to a collection of information unless it displays a valid OMB control number.

STATEMENT UNDER 37 CFR 3.73(c)

Applicant/Patent Owner: LS CLOUD STORAGE TECHNOLOGIES, LLC

Application No./Patent No.: 6,549,988 Filed/Issue Date: 2003-04-15

Titled: DATA STORAGE SYSTEM COMPRISING A NETWORK OF PCS AND METHOD USING SAME

LS CLOUD STORAGE TECHNOLOGIES, LLC, a LIMITED LIABILITY COMPANY

(Name of Assignee) (Type of Assignee, e.g., corporation, partnership, university, government agency, etc.)

states that, for the patent application/patent identified above, it is (choose **one** of options 1, 2, 3 or 4 below):

1. ☑ The assignee of the entire right, title, and interest.

2. ☐ An assignee of less than the entire right, title, and interest (check applicable box):

☐ The extent (by percentage) of its ownership interest is _____%. Additional Statement(s) by the owners holding the balance of the interest must be submitted to account for 100% of the ownership interest.

☐ There are unspecified percentages of ownership. The other parties, including inventors, who together own the entire right, title and interest are:

Additional Statement(s) by the owner(s) holding the balance of the interest must be submitted to account for the entire right, title, and interest.

3. ☐ The assignee of an undivided interest in the entirety (a complete assignment from one of the joint inventors was made). The other parties, including inventors, who together own the entire right, title, and interest are:

Additional Statement(s) by the owner(s) holding the balance of the interest must be submitted to account for the entire right, title, and interest.

4. ☐ The recipient, via a court proceeding or the like (*e.g.*, bankruptcy, probate), of an undivided interest in the entirety (a complete transfer of ownership interest was made). The certified document(s) showing the transfer is attached.

The interest identified in option 1, 2 or 3 above (not option 4) is evidenced by either (choose **one** of options A or B below):

A. ☐ An assignment from the inventor(s) of the patent application/patent identified above. The assignment was recorded in the United States Patent and Trademark Office at Reel _____, Frame _____, or for which a copy thereof is attached.

B. ☑ A chain of title from the inventor(s), of the patent application/patent identified above, to the current assignee as follows:

1. From: ILYA GERTNER To: NETWORK DISK, INC.

The document was recorded in the United States Patent and Trademark Office at

Reel 040125, Frame 0109, or for which a copy thereof is attached.

2. From: NETWORK DISK, INC. To: ILYA GERTNER

The document was recorded in the United States Patent and Trademark Office at

Reel 039393, Frame 0323, or for which a copy thereof is attached.

This collection of information is required by 37 CFR 3.73(b). The information is required to obtain or retain a benefit by the public which is to file (and by the USPTO to process) an application. Confidentiality is governed by 35 U.S.C. 122 and 37 CFR 1.11 and 1.14. This collection is estimated to take 12 minutes to complete, including gathering, preparing, and submitting the completed application form to the USPTO. Time will vary depending upon the individual case. Any comments on the amount of time you require to complete this form and/or suggestions for reducing this burden, should be sent to the Chief Information Officer, U.S. Patent and Trademark Office, U.S. Department of Commerce, P.O. Box 1450, Alexandria, VA 22313-1450. DO NOT SEND FEES OR COMPLETED FORMS TO THIS ADDRESS. **SEND TO: Commissioner for Patents, P.O. Box 1450, Alexandria, VA 22313-1450.**

If you need assistance in completing the form, call 1-800-PTO-9199 and select option 2.

Under the Paperwork Reduction Act of 1995, no persons are required to respond to a collection of information unless it displays a valid OMB control number.

STATEMENT UNDER 37 CFR 3.73(c)

3. From: ILYA GERTNER To: SPOT ON CORP.

The document was recorded in the United States Patent and Trademark Office at
Reel 039415, Frame 0060, or for which a copy thereof is attached.

4. From: SPOT ON CORP. To: LS CLOUD STORAGE TECHNOLOGIES, LLC

The document was recorded in the United States Patent and Trademark Office at
Reel 040124, Frame 0580, or for which a copy thereof is attached.

5. From: _____ To: _____

The document was recorded in the United States Patent and Trademark Office at
Reel _____, Frame _____, or for which a copy thereof is attached.

6. From: _____ To: _____

The document was recorded in the United States Patent and Trademark Office at
Reel _____, Frame _____, or for which a copy thereof is attached.

☐ Additional documents in the chain of title are listed on a supplemental sheet(s).

☑ As required by 37 CFR 3.73(c)(1)(i), the documentary evidence of the chain of title from the original owner to the assignee was, or concurrently is being, submitted for recordation pursuant to 37 CFR 3.11.

[NOTE: A separate copy (i.e., a true copy of the original assignment document(s)) must be submitted to Assignment Division in accordance with 37 CFR Part 3, to record the assignment in the records of the USPTO. See MPEP 302.08]

The undersigned (whose title is supplied below) is authorized to act on behalf of the assignee.

/Jeffrey G. Toler/	2017-11-10
Signature	Date
JEFFREY G. TOLER	38,342
Printed or Typed Name	Title or Registration Number

Privacy Act Statement

The **Privacy Act of 1974 (P.L. 93-579)** requires that you be given certain information in connection with your submission of the attached form related to a patent application or patent. Accordingly, pursuant to the requirements of the Act, please be advised that: (1) the general authority for the collection of this information is 35 U.S.C. 2(b)(2); (2) furnishing of the information solicited is voluntary; and (3) the principal purpose for which the information is used by the U.S. Patent and Trademark Office is to process and/or examine your submission related to a patent application or patent. If you do not furnish the requested information, the U.S. Patent and Trademark Office may not be able to process and/or examine your submission, which may result in termination of proceedings or abandonment of the application or expiration of the patent.

The information provided by you in this form will be subject to the following routine uses:

1. The information on this form will be treated confidentially to the extent allowed under the Freedom of Information Act (5 U.S.C. 552) and the Privacy Act (5 U.S.C 552a). Records from this system of records may be disclosed to the Department of Justice to determine whether disclosure of these records is required by the Freedom of Information Act.
2. A record from this system of records may be disclosed, as a routine use, in the course of presenting evidence to a court, magistrate, or administrative tribunal, including disclosures to opposing counsel in the course of settlement negotiations.
3. A record in this system of records may be disclosed, as a routine use, to a Member of Congress submitting a request involving an individual, to whom the record pertains, when the individual has requested assistance from the Member with respect to the subject matter of the record.
4. A record in this system of records may be disclosed, as a routine use, to a contractor of the Agency having need for the information in order to perform a contract. Recipients of information shall be required to comply with the requirements of the Privacy Act of 1974, as amended, pursuant to 5 U.S.C. 552a(m).
5. A record related to an International Application filed under the Patent Cooperation Treaty in this system of records may be disclosed, as a routine use, to the International Bureau of the World Intellectual Property Organization, pursuant to the Patent Cooperation Treaty.
6. A record in this system of records may be disclosed, as a routine use, to another federal agency for purposes of National Security review (35 U.S.C. 181) and for review pursuant to the Atomic Energy Act (42 U.S.C. 218(c)).
7. A record from this system of records may be disclosed, as a routine use, to the Administrator, General Services, or his/her designee, during an inspection of records conducted by GSA as part of that agency's responsibility to recommend improvements in records management practices and programs, under authority of 44 U.S.C. 2904 and 2906. Such disclosure shall be made in accordance with the GSA regulations governing inspection of records for this purpose, and any other relevant (*i.e.*, GSA or Commerce) directive. Such disclosure shall not be used to make determinations about individuals.
8. A record from this system of records may be disclosed, as a routine use, to the public after either publication of the application pursuant to 35 U.S.C. 122(b) or issuance of a patent pursuant to 35 U.S.C. 151. Further, a record may be disclosed, subject to the limitations of 37 CFR 1.14, as a routine use, to the public if the record was filed in an application which became abandoned or in which the proceedings were terminated and which application is referenced by either a published application, an application open to public inspection or an issued patent.
9. A record from this system of records may be disclosed, as a routine use, to a Federal, State, or local law enforcement agency, if the USPTO becomes aware of a violation or potential violation of law or regulation.

CERTIFICATION OF MICRO ENTITY STATUS
(GROSS INCOME BASIS)

Application Number or Control Number (if applicable):	Patent Number (if applicable):
09236409	6549988
First Named Inventor :	Title of Invention
ILYA GERTNER	DATA STORAGE SYSTEM COMPRISING A NETWORK OF PCS AND METHOD USING SAME

The applicant hereby certifies the following—

(1) SMALL ENTITY REQUIREMENT -The applicant qualifies as a small entity as defined in 37 CFR 1.27.

(2) APPLICATION FILING LIMIT - Neither the applicant nor the inventor nor a joint inventor has been named as the inventor or a joint inventor on more than four previously filed U.S. patent applications, excluding provisional applications and international applications under the Patent Cooperation Treaty (PCT) for which the basic national fee under 37 CFR 1.429 (a) was not paid, and also excluding patent applications for which the applicant has assignedall ownership rights or is obligated to assign all ownership rights as a result of the applicant's previous employment.

(3) GROSS INCOME LIMIT ON APPLICANTS AND INVENTORS - Neither the applicant nor the inventor nor a joint inventor, in the calendar year preceding the calendar year in which the applicable fee is being paid, had a gross income, as defined in section 61(a) of the Internal Revenue Code of 1986 (26 U.S.C. 61(a)), exceeding the Maximum Qualifying Gross Income reported on the USPTO website at http://www.uspto.gov/patents/law/micro_entity.jsp which is equal to three times the median household income for that preceding calendar year, as most recently reported by the Bureau of the Census.

(4) GROSS INCOME LIMIT ON PARTIES WITH AN OWNERSHIP INTEREST - Neither the applicant nor the inventor nor a joint inventor has assigned, granted, or conveyed, nor is under an obligation by contract or law to assign, grant, or convey, a license or other ownership interest in the application concerned to an entity that, in the calendar year preceding the calendar year in which the applicable fee is being paid, had a gross income, as defined in section 61(a) of the Internal Revenue Code of 1986, exceeding the Maximum Qualifying Gross Income reported on the USPTO website at http://www.uspto.gov/patents/law/micro_entity.jsp which is equal to three times the median household income for that preceding calendar year, as most recently reported by the Bureau of the Census.

THIS PORTION MUST BE COMPLETED BY THE SIGNATORY OR SIGNATORIES
I certify, in accordance with 37 CFR 1.4(d)(4) that I am:

- ○ An attorney or agent registered to practice before the Patent and Trademark Office who is of record in this application
- ○ An attorney or agent registered to practice before the Patent and Trademark Office, acting in a representative capacity.
- ◉ A sole inventor
- ○ A joint inventor; I certify that I am authorized to sign this submission on behalf of all of the inventors as evidenced by the power of attorney in the application
- ○ A joint inventor; all of whom are signing this request
- ○ The assignee of record of the entire interest that qualifies as an authorized party under 37 CFR 1.33(b)

Signature	/Ilya Gertner/

Name	Ilya Gertner

Electronic Patent Application Fee Transmittal

Application Number:	09236409
Filing Date:	22-Jan-1999
Title of Invention:	DATA STORAGE SYSTEM COMPRISING A NETWORK OF PCS AND METHOD USING SAME
First Named Inventor/Applicant Name:	ILYA GERTNER
Filer:	Ilya Gertner
Attorney Docket Number:	

Filed as Micro Entity

Filing Fees for **Utility under 35 USC 111(a)**

Description	Fee Code	Quantity	Amount	Sub-Total in USD($)
Basic Filing:				
Maintenance Fee Due at 11.5 years	3553	1	1850	1850
Pet. Delay Pymt Maintain Patent in Force	2558	1	850	850
Pages:				
Claims:				
Miscellaneous-Filing:				
Petition:				
Patent-Appeals-and-Interference:				

Description	Fee Code	Quantity	Amount	Sub-Total in USD($)
Post-Allowance-and-Post-Issuance:				
Extension-of-Time:				
Miscellaneous:				
			Total in USD ($)	**2700**

UNITED STATES PATENT AND TRADEMARK OFFICE

Commissioner for Patents
United States Patent and Trademark Office
P.O. Box 1450
Alexandria, VA 22313-1450
www.uspto.gov

In re Patent No. 6549988
Issue Date: April 15,2003
Application No. 09236409
Filed: January 22,1999
Attorney Docket No.

:
:DECISION GRANTING PETITION
:UNDER 37 CFR 1.378(b)
:

This is a decision on the electronic petition, filed May 12,2015 ,under 37 CFR 1.378(b) to accept the unintentionally delayed payment of the 11.5 year maintenance fee for the above-identified patent.

The petition is **GRANTED**.

The maintenance fee is accepted, and the above-identified patent reinstated as of May 12,2015 .
This decision also constitutes notice that the fee has been accepted. An electronic copy of the petition and this decision has been created as an entry in the Image File Wrapper. Nevertheless, petitioner should print and retain an independent copy.

Telephone inquiries related to this electronic decision should be directed to the Electronic Business Center at 1-866-217-9197.

Electronic Acknowledgement Receipt

EFS ID:	22323975
Application Number:	09236409
Patent Number:	6549988
Confirmation Number:	1514
Petition Issued Date:	May 12,2015
Title of Invention:	DATA STORAGE SYSTEM COMPRISING A NETWORK OF PCS AND METHOD USING SAME
First Named Inventor/Applicant Name:	ILYA GERTNER
Customer Number:	7278
Filer:	Ilya Gertner
Filer Authorized By:	
Attorney Docket Number:	
Receipt Date:	12-MAY-2015
Filing Date:	22-JAN-1999
Time Stamp:	15:42:23
Application Type:	Utility under 35 USC 111(a)

Payment information:

Submitted with Payment	yes
Payment Type	Credit Card
Payment was successfully received in RAM	$ 2700
RAM confirmation Number	2310
Deposit Account	
Authorized User	
The Director of the USPTO is hereby authorized to charge indicated fees and credit any overpayment as follows:	

Google Exhibit 1002
Google v. LS Cloud Storage Technologies
IPR2023-00777, Page 22 of 280

File Listing:

Document Number	Document Description	File Name	File Size(Bytes)/ Message Digest	Multi Part /.zip	Pages (if appl.)
1	Petition automatically granted by EFS	petition-request.pdf	32075 4b9362e5bf6385d1c86758dd292326a290eb6202	no	2
Warnings:					
Information:					
2	Certification of Micro Entity (Gross Income Basis)	microGrossIncomeBasis.pdf	30938 781a4bd15554caf7e93bf20dc9b73a85c3f3cff9	no	2
Warnings:					
Information:					
3	Fee Worksheet (SB06)	fee-info.pdf	31724 ecd9093b90aaf26963cca8eb6ad3016162309120	no	2
Warnings:					
Information:					
		Total Files Size (in bytes):	94737		

This Acknowledgement Receipt evidences receipt on the noted date by the USPTO of the indicated documents, characterized by the applicant, and including page counts, where applicable. It serves as evidence of receipt similar to a Post Card, as described in MPEP 503.

New Applications Under 35 U.S.C. 111
If a new application is being filed and the application includes the necessary components for a filing date (see 37 CFR 1.53(b)-(d) and MPEP 506), a Filing Receipt (37 CFR 1.54) will be issued in due course and the date shown on this Acknowledgement Receipt will establish the filing date of the application.

National Stage of an International Application under 35 U.S.C. 371
If a timely submission to enter the national stage of an international application is compliant with the conditions of 35 U.S.C. 371 and other applicable requirements a Form PCT/DO/EO/903 indicating acceptance of the application as a national stage submission under 35 U.S.C. 371 will be issued in addition to the Filing Receipt, in due course.

New International Application Filed with the USPTO as a Receiving Office
If a new international application is being filed and the international application includes the necessary components for an international filing date (see PCT Article 11 and MPEP 1810), a Notification of the International Application Number and of the International Filing Date (Form PCT/RO/105) will be issued in due course, subject to prescriptions concerning national security, and the date shown on this Acknowledgement Receipt will establish the international filing date of the application.

PETITION TO ACCEPT UNINTENTIONALLY DELAYED PAYMENT OF MAINTENANCE FEE IN AN EXPIRED PATENT (37 CFR 1.378(b))

Patent Number	Issue Date	Application Number	Filing Date	Docket Number (if applicable)
6549988	15-Apr-2003	09236409	22-Jan-1999	

CAUTION: Maintenance fee (and surcharge, if any) payment must correctly identify: (1) the patent number and (2) the application number of the actual U.S. application leading to issuance of that patent to ensure the fee(s) is/are associated with the correct patent. 37 CFR 1.366(c) and (d).

Applicants claims the following fee status:

○ Small Entity

◉ Micro Entity

○ Regular Undiscounted

Applicants selects the following :

○ 3 1/2	○ 7 1/2	◉ 11 1/2

PETITION FEE
The petition fee required by 37 CFR 1.17(m) (Fee Code 1558/2558) must be paid as a condition of accepting unintentionally delayed payment of the maintenance fee.

MAINTENANCE FEE (37 CFR 1.20(e)-(g))
The appropriate maintenance fee must be submitted with this petition.

STATEMENT
THE UNDERSIGNED CERTIFIES THAT THE DELAY IN PAYMENT OF THE MAINTENANCE FEE TO THIS PATENT WAS UNINTENTIONAL

PETITIONER(S) REQUEST THAT THE DELAYED PAYMENT OF THE MAINTENANCE FEE BE ACCEPTED AND THE PATENT REINSTATED

THIS PORTION MUST BE COMPLETED BY THE SIGNATORY OR SIGNATORIES

37 CFR 1.378(c) states: "Any petition under this section must be signed in compliance with 37 CFR 1.33(b) ."

I certify, in accordance with 37 CFR 1.4(d)(4) that I am

○ An attorney or agent registered to practice before the Patent and Trademark Office who has been given power of attorney in this application.

○ An attorney or agent registered to practice before the Patent and Trademark Office

◉ A sole patentee

○ A joint patentee; I certify that I am authorized to sign this submission on behalf of all the other patentees as evidenced by the power of attorney in the application

○ A joint patentee; all of whom are signing this e-petition

○ The assignee of record of the entire interest that qualifies as an authorized party under 37 CFR 1.33(b)

Sole Patentee	
A signature of the applicant or representative is required in accordance with 37 CFR 1.33 and 10.18. Please see 37 CFR 1.4(d) for the form of the signature.	
Signature	/Ilya Gertner/
Name	Ilya Gertner

UNITED STATES PATENT AND TRADEMARK OFFICE

Commissioner for Patents
United States Patent and Trademark Office
P.O. Box 1450
Alexandria, VA 22313-1450
www.uspto.gov

P75M

DARBY & DARBY P.C.
P.O. BOX 770
Church Street Station
New York NY 10008-0770

DATE PRINTED

05/08/15

NOTICE OF PATENT EXPIRATION

According to the records of the U.S. Patent and Trademark Office (USPTO), payment of the maintenance fee for the patent(s) listed below has not been received timely prior to the end of the six-month grace period in accordance with 37 CFR 1.362(e). THE PATENT(S) LISTED BELOW HAS THEREFORE EXPIRED AS OF THE END OF THE GRACE PERIOD. 35 U.S.C. 41(b). Notice of the expiration will be published in the USPTO Official Gazette.

Expired patents may be reinstated in accordance with 37 CFR 1.378 if upon petition, the maintenance fee and the surcharge set forth in 37 CFR 1.20(i) are paid, AND the delay in payment of the maintenance fee is shown to the satisfaction of the Director to have been unavoidable or unintentional. 35 U.S.C. 41(c)(1).

If the Director accepts payment of the maintenance fee and surcharge upon petition under 37 CFR 1.378, the patent shall be considered as not having expired but would be subject to the intervening rights and conditions set forth in 35 U.S.C. 41(c)(2).

For instructions on filing a petition under 37 CFR 1.378 to reinstate an expired patent, customers should call the Office of Petitions Help Desk at 571-272-3282 or refer to the USPTO Web site at www.uspto.gov/web/offices/pac/dapp/petitionspractice.html. The USPTO also permits reinstatement under 37 CFR 1.378(c) by electronic petition (e-petition) using EFS-Web; e-petitions may be automatically granted if all the eligibility requirements are met. For further information on filing an e-petition, please call the Electronic Business Center (EBC) at 866-217-9197 (toll-free) or 571-272-4100 or refer to the EBC's e-petition guide at www.uspto.gov/ebc/portal/efs/petition_quickstart.pdf.

PATENT NUMBER	U.S. APPLICATION NUMBER	PATENT ISSUE DATE	APPLICATION FILING DATE	EXPIRATION DATE	ATTORNEY DOCKET NUMBER
6549988	09236409	04/15/03	01/22/99	04/15/15	

NOTE: This notice was automatically generated based on the amount of time that elapsed since the date a patent was granted. It is possible that the patent term may have ended or been shortened due to a terminal disclaimer that was filed in the application. Also, for any patent that issued from an application filed on or after June 8, 1995 containing a specific reference to an earlier filed application or applications under 35 U.S.C. 120, 121, or 365(c), the patent term ends 20 years from the date on which the earliest such application was filed, unless the term was adjusted or extended under 35 U.S.C. 154 or 156.

Google Exhibit 1002
Google v. LS Cloud Storage Technologies
IPR2023-00777, Page 26 of 280

UNITED STATES PATENT AND TRADEMARK OFFICE

UNITED STATES DEPARTMENT OF COMMERCE
United States Patent and Trademark Office
Address: COMMISSIONER FOR PATENTS
P.O. Box 1450
Alexandria, Virginia 22313-1450
www.uspto.gov

APPLICATION NUMBER	FILING OR 371 (c) DATE	FIRST NAMED APPLICANT	ATTY. DOCKET NO./TITLE
09/236,409	01/22/1999	ILYA GERTNER	

CONFIRMATION NO. 1514

OC000000021489016

7278
DARBY & DARBY P.C.
P. O. BOX 5257
NEW YORK, NY 10150-5257

Date Mailed: 12/06/2006

NOTICE OF ACCEPTANCE OF POWER OF ATTORNEY

This is in response to the Power of Attorney filed 08/10/2006.

The Power of Attorney in this application is accepted. Correspondence in this application will be mailed to the above address as provided by 37 CFR 1.33.

DAVID O LIPSCOMB
OIPE (703) 308-9010 EXT 179

OFFICE COPY

UNITED STATES PATENT AND TRADEMARK OFFICE

UNITED STATES DEPARTMENT OF COMMERCE
United States Patent and Trademark Office
Address: COMMISSIONER FOR PATENTS
P.O. Box 1450
Alexandria, Virginia 22313-1450
www.uspto.gov

APPLICATION NUMBER	FILING OR 371 (c) DATE	FIRST NAMED APPLICANT	ATTY. DOCKET NO./TITLE
09/236,409	01/22/1999	ILYA GERTNER	

CONFIRMATION NO. 1514

OC000000021488994

021323
TESTA, HURWITZ & THIBEAULT, LLP
HIGH STREET TOWER
125 HIGH STREET
BOSTON, MA 02110

Date Mailed: 12/06/2006

NOTICE REGARDING CHANGE OF POWER OF ATTORNEY

This is in response to the Power of Attorney filed 08/10/2006.

- The Power of Attorney to you in this application has been revoked by the assignee who has intervened as provided by 37 CFR 3.71. Future correspondence will be mailed to the new address of record(37 CFR 1.33).

DAVID O LIPSCOMB
OIPE (703) 308-9010 EXT 179

OFFICE COPY

Best Available Copy

OIPE
AUG 1 0 2006

PTO/SB/81 (01-06)
Approved for use through 12/31/2008. OMB 0651-0035
U.S. Patent and Trademark Office; U.S. DEPARTMENT OF COMMERCE
Under the Paperwork Reduction Act of 1995, no persons are required to respond to a collection of information unless it displays a valid OMB control number.

POWER OF ATTORNEY and CORRESPONDENCE ADDRESS INDICATION FORM

Application Number	09/236,409-Conf. #1514
Filing Date	January 22, 1999
First Named Inventor	Ilya Gertner
Title	DATA STORAGE SYSTEM COMPRISING A NETWORK OF PCS AND METHOD USING, SAME
Art Unit	2187
Examiner Name	T. V. Nguyen
Attorney Docket No.	20824/0205080-US0

I hereby revoke all previous powers of attorney given in the above-identified application.

I hereby appoint:

[x] Practitioners associated with the Customer Number: 07278

OR

[ ] Practitioner(s) named below:

Name	Registration Number	Name	Registration Number

as my/our attorney(s) or agent(s) to prosecute the application identified above, and to transact all business in the United States Patent and Trademark Office connected therewith.

Please recognize or change the correspondence address for the above-identified application to:

[x] The address associated with the above-mentioned Customer Number:

OR

[ ] The address associated with Customer Number:

OR

[ ] Firm or Individual Name	Joseph R. Robinson DARBY & DARBY P.C.				
Address	P.O. Box 5257				
City	New York	State	NY	Zip	10150-5257
Country	US	Telephone	(212) 527-7700	Email	

I am the:

[ ] Applicant/Inventor.

[X] Assignee of record of the entire interest. See 37 CFR 3.71.
Statement under 37 CFR 3.73(b) is enclosed. (Form PTO/SB/96)

SIGNATURE of Applicant or Assignee of Record

Signature	Ilya Gertner	Date	7/30/2006
Name	ILYA GERTNER	Telephone	(562) 900-3610
Title and Company	PRESIDENT, NETWORK DISK, INC.		

NOTE: Signatures of all the inventors or assignees of record of the entire interest or their representative(s) are required. Submit multiple forms if more than one signature is required, see below*.

[ ] *Total of 1 forms are submitted.

6549988

Electronic Acknowledgement Receipt

EFS ID:	1148716
Application Number:	09236409
Confirmation Number:	1514
Title of Invention:	DATA STORAGE SYSTEM COMPRISING A NETWORK OF PCS AND METHOD USING SAME 7278
First Named Inventor:	ILYA GERTNER
Customer Number:	21323
Filer:	Flynn Barrison/Dannielle Davis
Filer Authorized By:	Flynn Barrison
Attorney Docket Number:	
Receipt Date:	10-AUG-2006
Filing Date:	22-JAN-1999
Time Stamp:	09:56:44
Application Type:	Utility
International Application Number:	

COMPLETED

Payment information:

Submitted with Payment	no

File Listing:

Document Number	Document Description	File Name	File Size(Bytes)	Multi Part	Pages
1	Power of Attorney (may include Associate POA)	00821252.pdf	22721	no	1

PTO/SB/81 (01-06)
Approved for use through 12/31/2008. OMB 0651-0035
U.S. Patent and Trademark Office; U.S. DEPARTMENT OF COMMERCE
Under the Paperwork Reduction Act of 1995, no persons are required to respond to a collection of information unless it displays a valid OMB control number.

POWER OF ATTORNEY and CORRESPONDENCE ADDRESS INDICATION FORM

Application Number	09/236,409-Conf. #1514
Filing Date	January 22, 1999
First Named Inventor	Ilya Gertner
Title	DATA STORAGE SYSTEM COMPRISING A NETWORK OF PCS AND METHOD USING, SAME
Art Unit	2187
Examiner Name	T. V. Nguyen
Attorney Docket No.	20824/0205080-US0

I hereby revoke all previous powers of attorney given in the above-identified application.

I hereby appoint:

[x] Practitioners associated with the Customer Number: 07278

OR

[ ] Practitioner(s) named below:

Name	Registration Number	Name	Registration Number

as my/our attorney(s) or agent(s) to prosecute the application identified above, and to transact all business in the United States Patent and Trademark Office connected therewith.

Please recognize or change the correspondence address for the above-identified application to:

[x] The address associated with the above-mentioned Customer Number:

OR

[ ] The address associated with Customer Number:

OR

[ ] Firm or Individual Name	Joseph R. Robinson DARBY & DARBY P.C.				
Address	P.O. Box 5257				
City	New York	State	NY	Zip	10150-5257
Country	US	Telephone	(212) 527-7700	Email	

I am the:

[ ] Applicant/Inventor.

[X] Assignee of record of the entire interest. See 37 CFR 3.71.
Statement under 37 CFR 3.73(b) is enclosed. (Form PTO/SB/96)

SIGNATURE of Applicant or Assignee of Record

Signature	Ilya Gertner	Date	7/30/2006
Name	ILYA GERTNER	Telephone	(562)900-3610
Title and Company	PRESIDENT, NETWORK Disk. Inc.		

NOTE: Signatures of all the inventors or assignees of record of the entire interest or their representative(s) are required. Submit multiple forms if more than one signature is required, see below*.

[ ] *Total of 1 forms are submitted.

Electronic Acknowledgement Receipt

EFS ID:	1148716
Application Number:	09236409
Confirmation Number:	1514
Title of Invention:	DATA STORAGE SYSTEM COMPRISING A NETWORK OF PCS AND METHOD USING SAME
First Named Inventor:	ILYA GERTNER
Customer Number:	21323
Filer:	Flynn Barrison/Dannielle Davis
Filer Authorized By:	Flynn Barrison
Attorney Docket Number:	
Receipt Date:	10-AUG-2006
Filing Date:	22-JAN-1999
Time Stamp:	09:56:44
Application Type:	Utility
International Application Number:	

Payment information:

Submitted with Payment	no

File Listing:

Document Number	Document Description	File Name	File Size(Bytes)	Multi Part	Pages
1	Power of Attorney (may include Associate POA)	00821252.pdf	22721	no	1

Warnings:	
The page size in the PDF is too large. The pages should be 8.5 x 11 or A4. If this PDF is submitted, the pages will be resized upon entry into the Image File Wrapper and may affect subsequent processing	
Information:	
Total Files Size (in bytes):	22721

This Acknowledgement Receipt evidences receipt on the noted date by the USPTO of the indicated documents, characterized by the applicant, and including page counts, where applicable. It serves as evidence of receipt similar to a Post Card, as described in MPEP 503.

New Applications Under 35 U.S.C. 111
If a new application is being filed and the application includes the necessary components for a filing date (see 37 CFR 1.53(b)-(d) and MPEP 506), a Filing Receipt (37 CFR 1.54) will be issued in due course and the date shown on this Acknowledgement Receipt will establish the filing date of the application.

National Stage of an International Application under 35 U.S.C. 371
If a timely submission to enter the national stage of an international application is compliant with the conditions of 35 U.S.C. 371 and other applicable requirements a Form PCT/DO/EO/903 indicating acceptance of the application as a national stage submission under 35 U.S.C. 371 will be issued in addition to the Filing Receipt, in due course.

Best Available Copy

OIPE FEB 27 2003 PATENT & TRADEMARK OFFICE 3C67

Express Mail Label No. EV192309527US

TRANSMITTAL FORM

Application Serial Number	09/236,409
Filing Date	January 22, 1999
First Named Inventor	Ilya Gertner
Group Art Unit	2187
Examiner Name	Than Vinh Nguyen
Attorney Docket No.	NDI-001
Patent No.	Not applicable
Issue Date	Not applicable

ENCLOSURES ***(check all that apply)***

- ☒ Fee Transmittal Form
  - ☒ Check Attached
  - ☐ Copy of Fee Transmittal Form
- ☐ Amendment/Response
  - ☐ Preliminary
  - ☐ After Final
  - ☐ Affidavits/declaration(s)
  - ☐ Letter to Official Draftsperson including Drawings [Total Sheets _____]
- ☐ Petition for Extension of Time
- ☐ Information Disclosure Statement
  - ☐ Form PTO-1449
  - ☐ Copies of IDS Citations
- ☐ Certified Copy of Priority Document(s)
- ☐ Sequence Listing submission
  - ☐ Paper Copy/CD
  - ☐ Computer Readable Copy
  - ☐ Statement verifying identity of above
- ☐ Copy of Notice to File Missing Parts of Application (PTO-1553)
- ☒ Formal Drawing(s)
- ☐ Request For Continued Examination (RCE) Transmittal
- ☐ Power of Attorney (Revocation of Prior Powers)
- ☐ Terminal Disclaimer
- ☐ Executed Declaration and Power of Attorney for Utility or Design Patent Application
- ☐ Small Entity Statement
- ☐ CD(s) for large table or computer program
- ☐ Amendment After Allowance
- ☐ Request for Certificate of Correction
  - ☐ Certificate of Correction (in duplicate)
- ☐ Notice of Appeal to Board of Patent Appeals and Interferences
- ☐ Appeal Brief (in triplicate)
- ☐ Status Inquiry
- ☒ Return Receipt Postcard
- ☐ Certificate of First Class Mailing under 37 C.F.R. 1.8
- ☐ Certificate of Facsimile Transmission under 37 C.F.R. 1.8
- ☒ Additional Enclosure(s) *(please identify below)*
- ☒ PTOL-85
- ☒ Transmittal of Formal Drawings

CORRESPONDENCE ADDRESS

Direct all correspondence to:

Patent Administrator
Testa, Hurwitz & Thibeault, LLP
High Street Tower
125 High Street
Boston, MA 02110
Tel. No.: (617) 248-7000
Fax No.: (617) 248-7100

SIGNATURE BLOCK

Respectfully submitted,

Date: February 27, 2003
Reg. No. 33,497
Tel. No.: (617) 310-8108
Fax No.: (617) 248-7100

Steven J. Frank
Attorney for Applicant(s)
Testa, Hurwitz & Thibeault, LLP
High Street Tower
125 High Street
Boston, MA 02110

FRANKSJ\9308\4.2586477_1

12/02

Ex[illegible] Mail Label No. EV192309527US

OIPE FEB 27 2003 PATENT & TRADEMARK OFFICE

FEE TRA[illegible]AL
FY [illegible]

Complete if Known	
Application Serial Number	09/236,409
Filing Date	January 22, 1999
First Named Inventor	Ilya Gertner
Group Art Unit	2187
Examiner Name	Than Vinh Nguyen
Attorney Docket No.	NDI-001

METHOD OF PAYMENT

1. ☒ Payment Enclosed:
   ☒ Check ☐ Money Order ☐ Other

2. ☒ The Commissioner is hereby authorized to credit or charge any fee indicated below for this submission to Deposit Account No. 20-0531.
   - ☐ Required Fees (copy of this sheet enclosed).
   - ☒ Additional fee required under 37 CFR 1.16 and 1.17.
   - ☒ Overpayment Credit.

3. ☐ Applicant claims small entity status.

FEE CALCULATION

1. FILING FEE

Large Entity Fee ($)	Fee Description	Fee Paid
740	Utility filing fee	
330	Design filing fee	
160	Provisional filing fee	

	Number Filed	Number Extra	Rate	Amount
Total Claims		- 20 =	x $ 18.00 =	
Independent Claims		- 3 =	x $ 84.00 =	
☐ Multiple Dependent Claim(s), if any			$280.00 =	

TOTAL:
SMALL ENTITY DISCOUNT:
SUBTOTAL (1) ($)

2. AMENDMENT CLAIM FEES

	Claims Remaining After Amend.	Highest No. Previously Paid For	Present Extra	Rate	Fee Paid
Total	-		=	x $ 18.00 =	
Indep.	-		=	x $ 84.00 =	
☐ First Presentation of Multiple Dep. Claim				+ $280.00 =	

TOTAL: ($)
SMALL ENTITY DISCOUNT: ($)
SUBTOTAL (2) ($)

FEE CALCULATION (continued)

3. ADDITIONAL FEES

Large Entity Fee ($)	Small Entity Fee ($)	Fee Description	Fee Paid
130	65	Surcharge - late filing fee or oath	
50	25	Surcharge - late provisional filing fee or cover sheet	
130	130	Non-English specification	
2,520	2,520	Request for ex parte reexamination	
110	55	Extension for reply within first month	
400	200	Extension for reply within second month	
920	460	Extension for reply within third month	
1440	720	Extension for reply within fourth month	
1960	980	Extension for reply within fifth month	
320	160	Notice of Appeal	
320	160	Filing a brief in support of an appeal	
280	140	Request for oral hearing	
130	130	Petitions to the Commissioner	
180	180	Submission of Information Disclosure Statement	
740	370	Filing a submission after final rejection (37 CFR 1.129(a))	
740	370	For each additional invention to be examined (37 CFR 1.129(b))	
100	100	Certificate of Correction for applicant's error	
Other fee (Specify)		Request for Continued Examination (RCE) Transmittal	
Other fee (Specify)		Issue Fee	640.00

SUBTOTAL (3) ($) 640.00

SUBTOTAL (1)
SUBTOTAL (2) 640.00
SUBTOTAL (3)

TOTAL ($) 640.00

CORRESPONDENCE ADDRESS

Direct all correspondence to:
Patent Administrator
Testa, Hurwitz & Thibeault, LLP
High Street Tower-125 High Street
Boston, MA 02110
Tel. No.: (617) 248-7000
Fax No.: (617) 248-7100

SIGNATURE BLOCK

Respectfully submitted,

Date: February 27, 2003
Reg. No.: 33,497
Tel. No.: (617) 310-8108
Fax No.: (617) 248-7100

Steven J. Frank
Attorney for the Applicants
Testa, Hurwitz & Thibeault, LLP
High Street Tower-125 High Street
Boston, MA 02110

FRANKSJ\9308\4.2586471_1

Google Exhibit 1002
Google v. LS Cloud Storage Technologies
IPR2023-00777, Page 35 of 280

OIPE JC67
FEB 27 2003
PATENT & TRADEMARK OFFICE

Express Mail La[redacted] EV192309527US
PATENT
Attorney Docket No. NDI-001

IN THE UNITED STATES PATENT AND TRADEMARK OFFICE

#20M

APPLICANT:	Ilya Gertner	CONFIRMATION NO.:	1514
SERIAL NO.:	09/236,409	GROUP NO.:	2187
FILING DATE:	January 22, 1999	EXAMINER:	Than Vinh Nguyen
TITLE:	DATA STORAGE SYSTEM COMPRISING A NETWORK OF PCs AND METHOD OF USING SAME		

Commissioner for Patents
Washington, D.C. 20231

TRANSMITTAL OF FORMAL DRAWINGS

Sir:

In response to the NOTICE ALLOWANCE AND FEE(S) DUE mailed on December 3, 2002, attached please find the formal drawings for this application (13 sheets).

Respectfully submitted,

Date: February 27, 2003
Reg. No. 33,497

Steven J. Frank
Attorney for Applicant(s)
Testa, Hurwitz, & Thibeault, LLP
High Street Tower
125 High Street
Boston, Massachusetts 02110

Tel. No.: (617) 310-8108
Fax No.: (617) 248-7100

FRANKSJ\9308\4.2586776_1

Best Available Copy

OIPE FEB 2 PATENT & TRADEMARK

Express Mail Label No. EV192309527US

PART B - FEE(S) TRANSMITTAL

Complete and send this form with applicable fee(s), to: Mail Box ISSUE FEE
Commissioner for Patents
Washington, D.C. 20231
Fax (703)746-4000

2-27-2003

INSTRUCTIONS: This form should be used for transmitting the ISSUE FEE and PUBLICATION FEE (if required). Blocks 1 through 4 should be completed where appropriate. All further correspondence including the Patent, advance orders and notification of maintenance fees will be mailed to the current correspondence address as indicated unless corrected below or directed otherwise in Block 1, by (a) specifying a new correspondence address; and/or (b) indicating a separate "FEE ADDRESS" for maintenance fee notifications.

CURRENT CORRESPONDENCE ADDRESS (Note: Legibly mark-up with any corrections or use Block 1)

021323 7590 12/03/2002

TESTA, HURWITZ & THIBEAULT, LLP
HIGH STREET TOWER
125 HIGH STREET
BOSTON, MA 02110

Note: A certificate of mailing can only be used for domestic mailings of the Fee(s) Transmittal. This certificate cannot be used for any other accompanying papers. Each additional paper, such as an assignment or formal drawing, must have its own certificate of mailing or transmission.

Certificate of Mailing or Transmission
I hereby certify that this Fee(s) Transmittal is being deposited with the United States Postal Service with sufficient postage for first class mail in an envelope addressed to the Box Issue Fee address above, or being facsimile transmitted to the USPTO, on the date indicated below.

(Depositor's name)
(Signature)
(Date)

APPLICATION NO.	FILING DATE	FIRST NAMED INVENTOR	ATTORNEY DOCKET NO.	CONFIRMATION NO.
09/236,409	01/22/1999	ILYA GERTNER		1514

TITLE OF INVENTION: DATA STORAGE SYSTEM COMPRISING A NETWORK OF PCS AND METHOD USING SAME

APPLN. TYPE	SMALL ENTITY	ISSUE FEE	PUBLICATION FEE	TOTAL FEE(S) DUE	DATE DUE
nonprovisional	YES	$640	$0	$640	03/03/2003

EXAMINER	ART UNIT	CLASS-SUBCLASS
NGUYEN, THAN VINH	2187	711-149000

1. Change of correspondence address or indication of "Fee Address" (37 CFR 1.363).

☐ Change of correspondence address (or Change of Correspondence Address form PTO/SB/122) attached.

☐ "Fee Address" indication (or "Fee Address" Indication form PTO/SB/47; Rev 03-02 or more recent) attached. **Use of a Customer Number is required.**

2. For printing on the patent front page, list (1) the names of up to 3 registered patent attorneys or agents OR, alternatively, (2) the name of a single firm (having as a member a registered attorney or agent) and the names of up to 2 registered patent attorneys or agents. If no name is listed, no name will be printed.

1 Testa, Hurwitz & Thibeault, LLP
2
3

3. ASSIGNEE NAME AND RESIDENCE DATA TO BE PRINTED ON THE PATENT (print or type)

PLEASE NOTE: Unless an assignee is identified below, no assignee data will appear on the patent. Inclusion of assignee data is only appropriate when an assignment has been previously submitted to the USPTO or is being submitted under *separate* cover. Completion of this form is NOT a substitute for filing an assignment.

(A) NAME OF ASSIGNEE (B) RESIDENCE: (CITY and STATE OR COUNTRY)

Please check the appropriate assignee category or categories (will not be printed on the patent) ☐ individual ☐ corporation or other private group entity ☐ government

4a. The following fee(s) are enclosed:

☒ Issue Fee
☐ Publication Fee
☐ Advance Order - # of Copies _____

4b. Payment of Fee(s):

☒ A check in the amount of the fee(s) is enclosed.
☐ Payment by credit card. Form PTO-2038 is attached.
☐ The Commissioner is hereby authorized by charge the required fee(s), or credit any overpayment, to Deposit Account Number _____ (enclose an extra copy of this form).

Commissioner for Patents is requested to apply the Issue Fee and Publication Fee (if any) or to re-apply any previously paid issue fee to the application identified above.

(Authorized Signature) (Date) February 27, 2003

NOTE: The Issue Fee and Publication Fee (if required) will not be accepted from anyone other than the applicant; a registered attorney or agent; or the assignee or other party in interest as shown by the records of the United States Patent and Trademark Office.

This collection of information is required by 37 CFR 1.311. The information is required to obtain or retain a benefit by the public which is to file (and by the USPTO to process) an application. Confidentiality is governed by 35 U.S.C. 122 and 37 CFR 1.14. This collection is estimated to take 12 minutes to complete, including gathering, preparing, and submitting the completed application form to the USPTO. Time will vary depending upon the individual case. Any comments on the amount of time you require to complete this form and/or suggestions for reducing this burden, should be sent to the Chief Information Officer, U.S. Patent and Trademark Office, U.S. Department of Commerce, Washington, D.C. 20231. DO NOT SEND FEES OR COMPLETED FORMS TO THIS ADDRESS. SEND TO: Commissioner for Patents, Washington, DC 20231.

Under the Paperwork Reduction Act of 1995, no persons are required to respond to a collection of information unless it displays a valid OMB control number.

03/04/2003 CVO222 00000126 200531 09236409
01 FC:2501 10.00 CH 640.00 OP

TRANSMIT THIS FORM WITH FEE(S)

Google Exhibit 1002
Google v. LS Cloud Storage Technologies
IPR2023-00777, Page 37 of 280

Title: Data Storage System Comprising a Network of PCs and Method of Using Same
Inventor: Ilya Gertner
Serial No. 09/236,409
Atty Docket No. NDI-001
Atty/Agent: Steven J. Frank/kb
Express Mail Label No. EV192309527US

6549988

OIPE JC67
FEB 27 2003
PATENT & TRADEMARK OFFICE

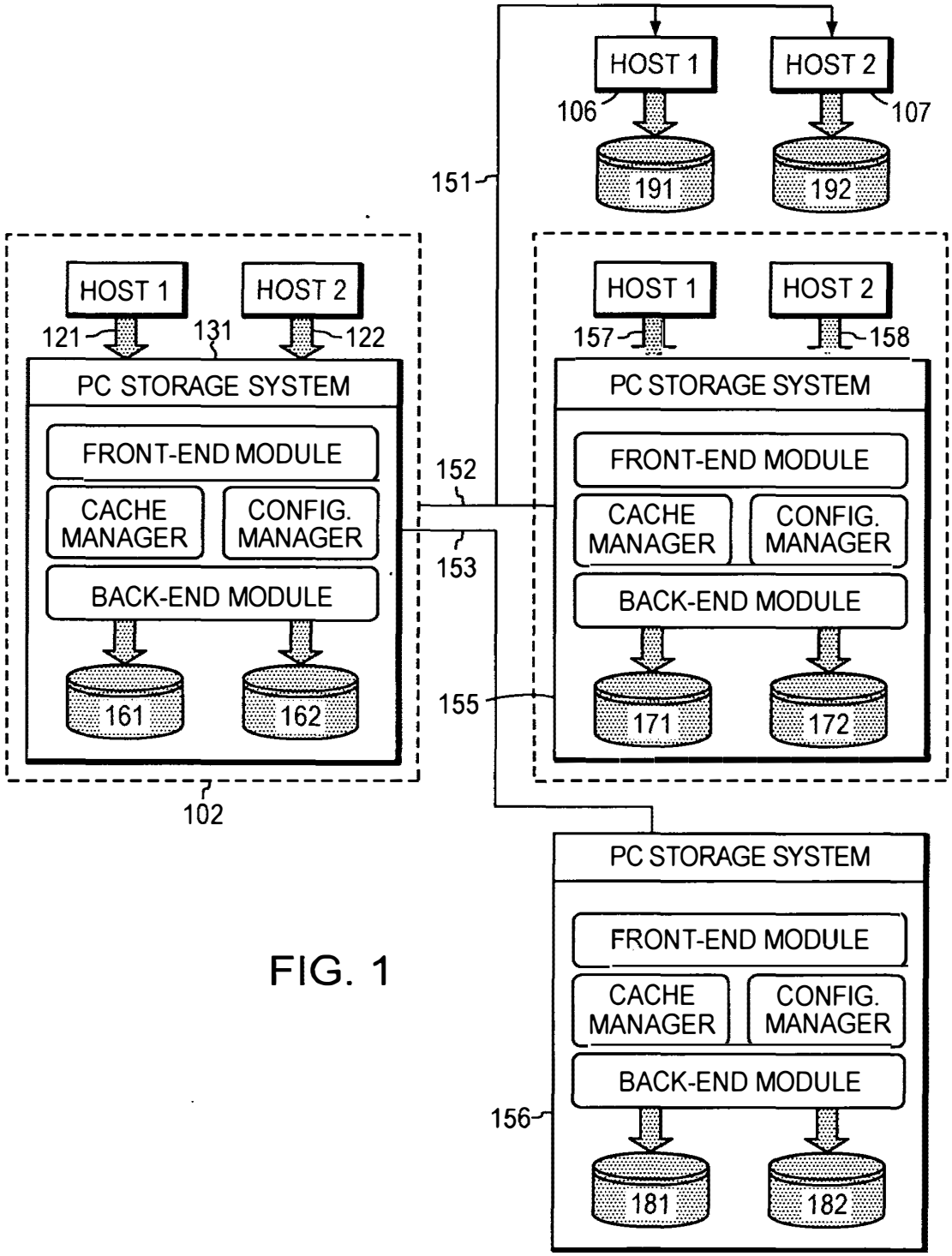

FIG. 1

OIPE JC67
FEB 27 2003
PATENT & TRADEMARK OFFICE

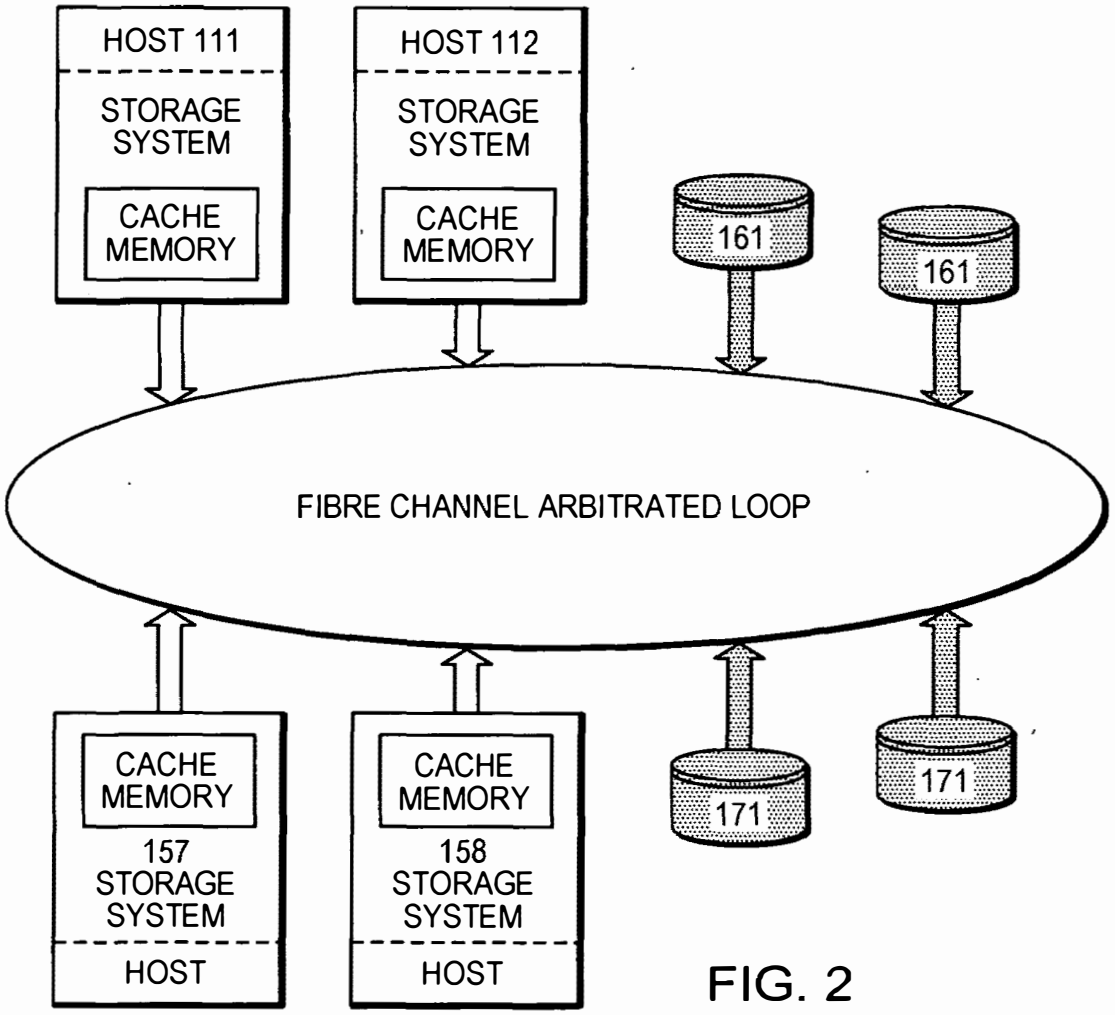

FIG. 2

OIPE JC67
FEB 2 7 2003
PATENT & TRADEMARK OFFICE

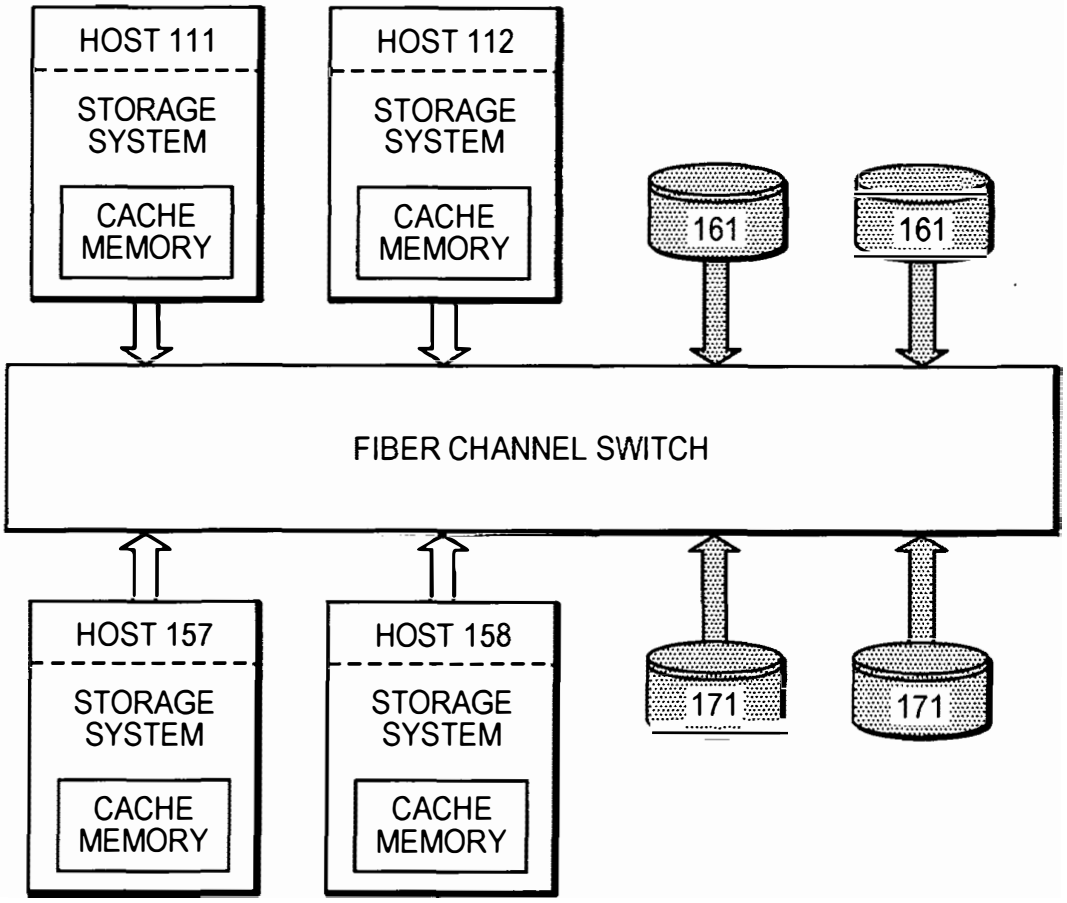

FIG. 2A

OIPE JC67 FEB 27 2003 PATENT & TRADEMARK OFFICE

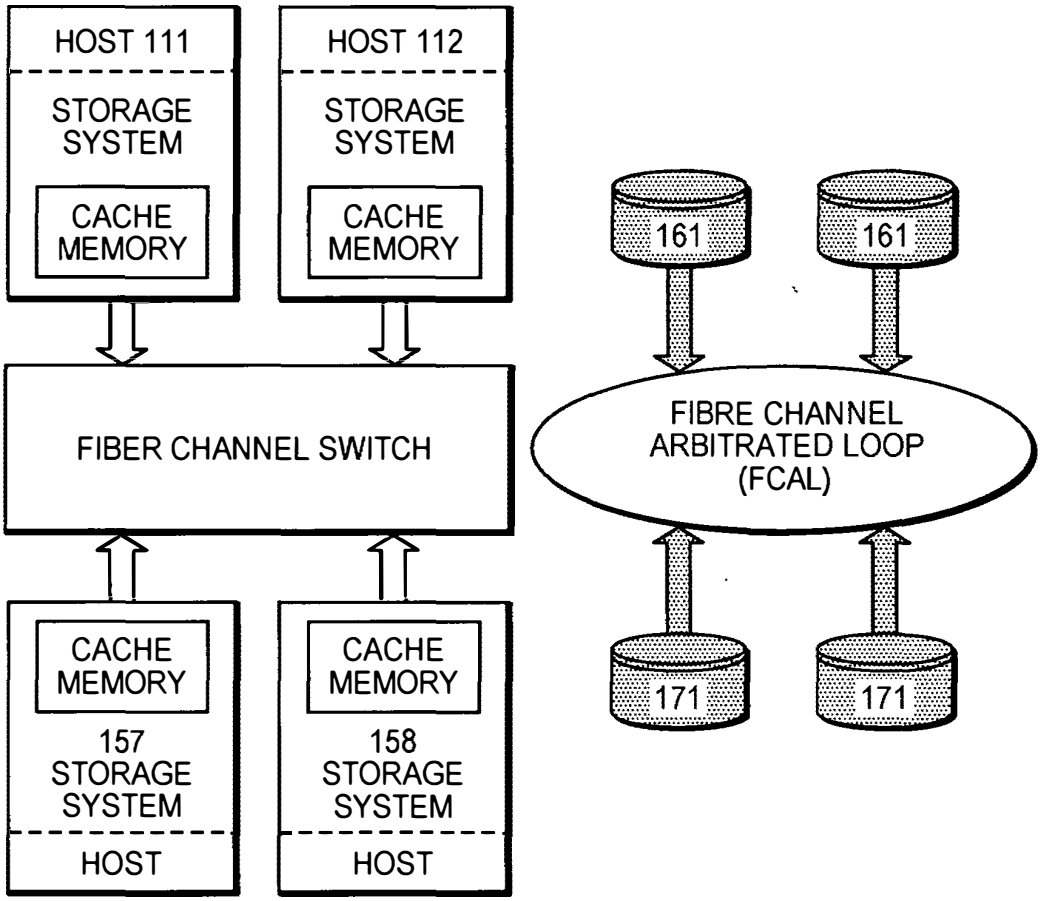

FIG. 2B

OIPE JC97
FEB 2 7 2003
PATENT & TRADEMARK OFFICE

Title: Data Storage System Comprising a Network of PCs and Method of Using Same
Inventor: Ilya Gertner
Serial No. 09/236,409
Atty Docket No. NDI-001
Atty/Agent: Steven J. Frank/kb
Express Mail Label No. EV192309527US

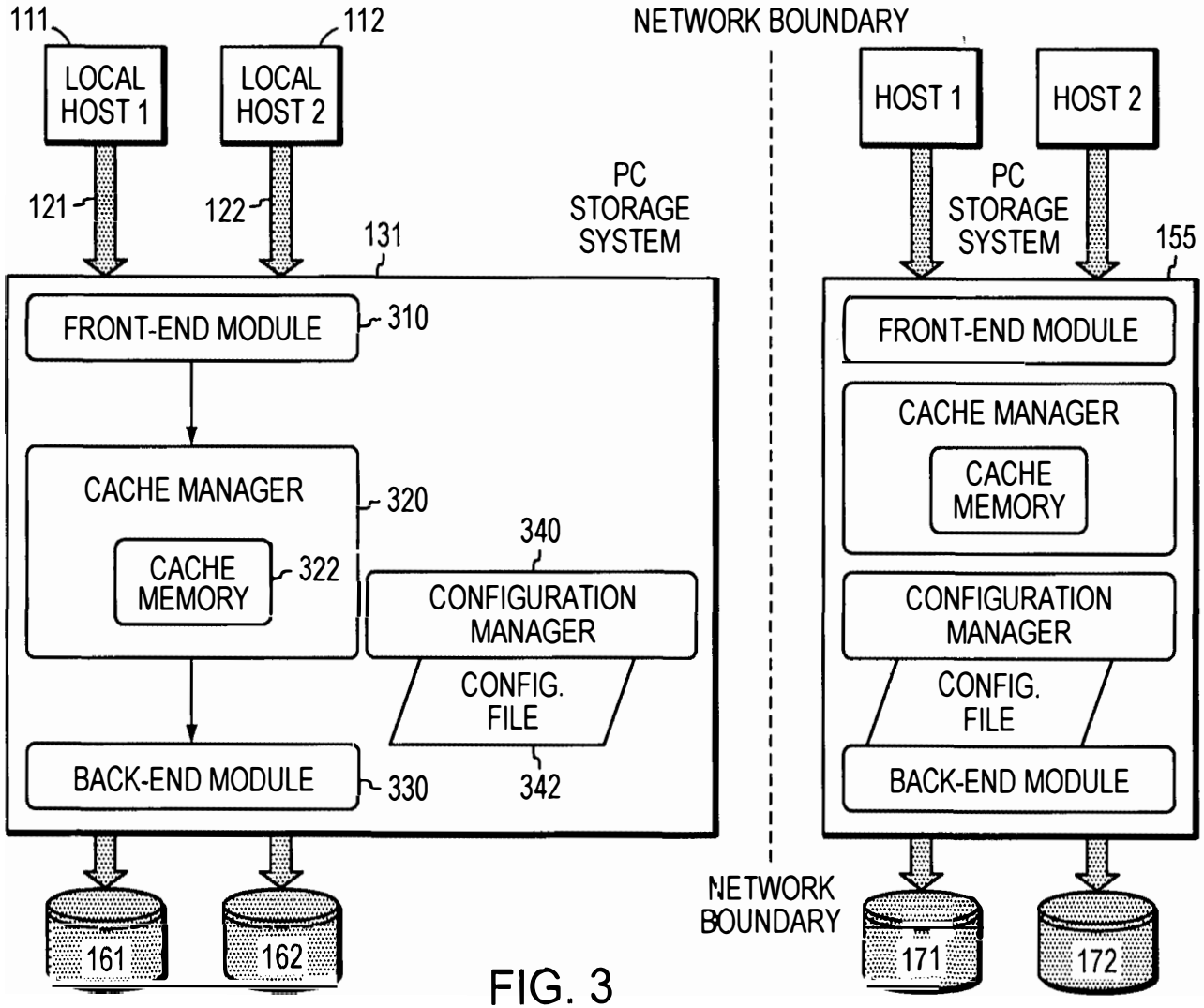

FIG. 3

OIPE JC67 FEB 27 2003 PATENT & TRADEMARK OFFICE

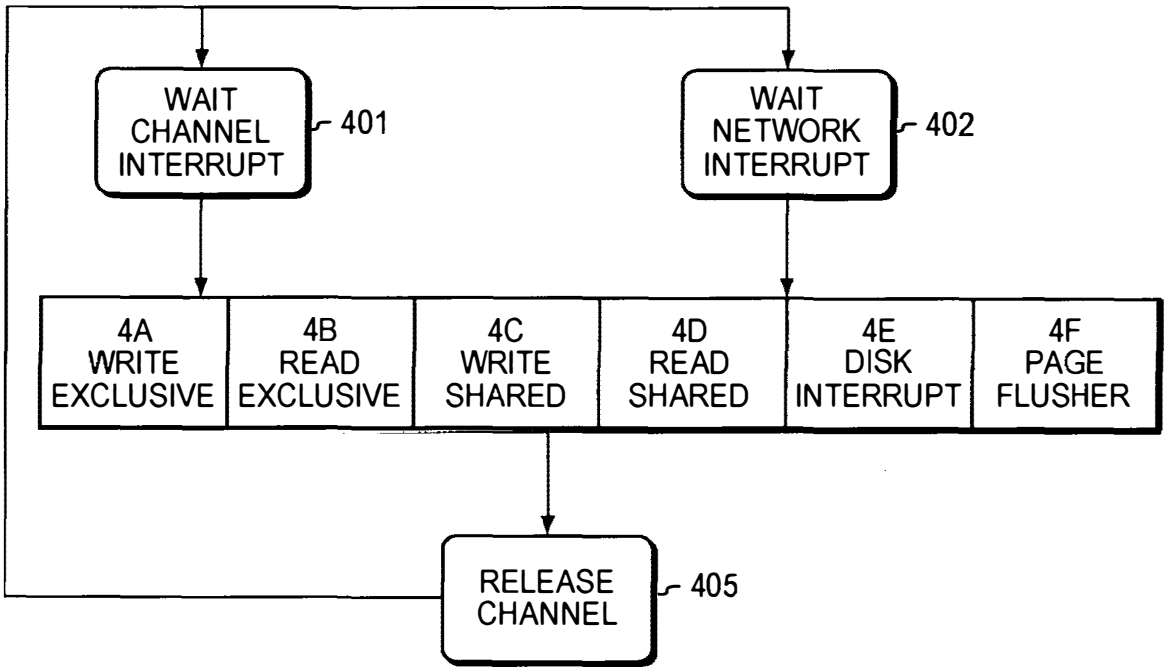

FIG. 4

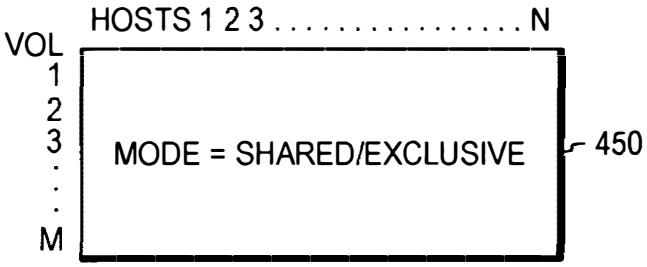

VOLUME ACCESS TABLE

OIPE JC67 FEB 27 2003 PATENT & TRADEMARK OFFICE

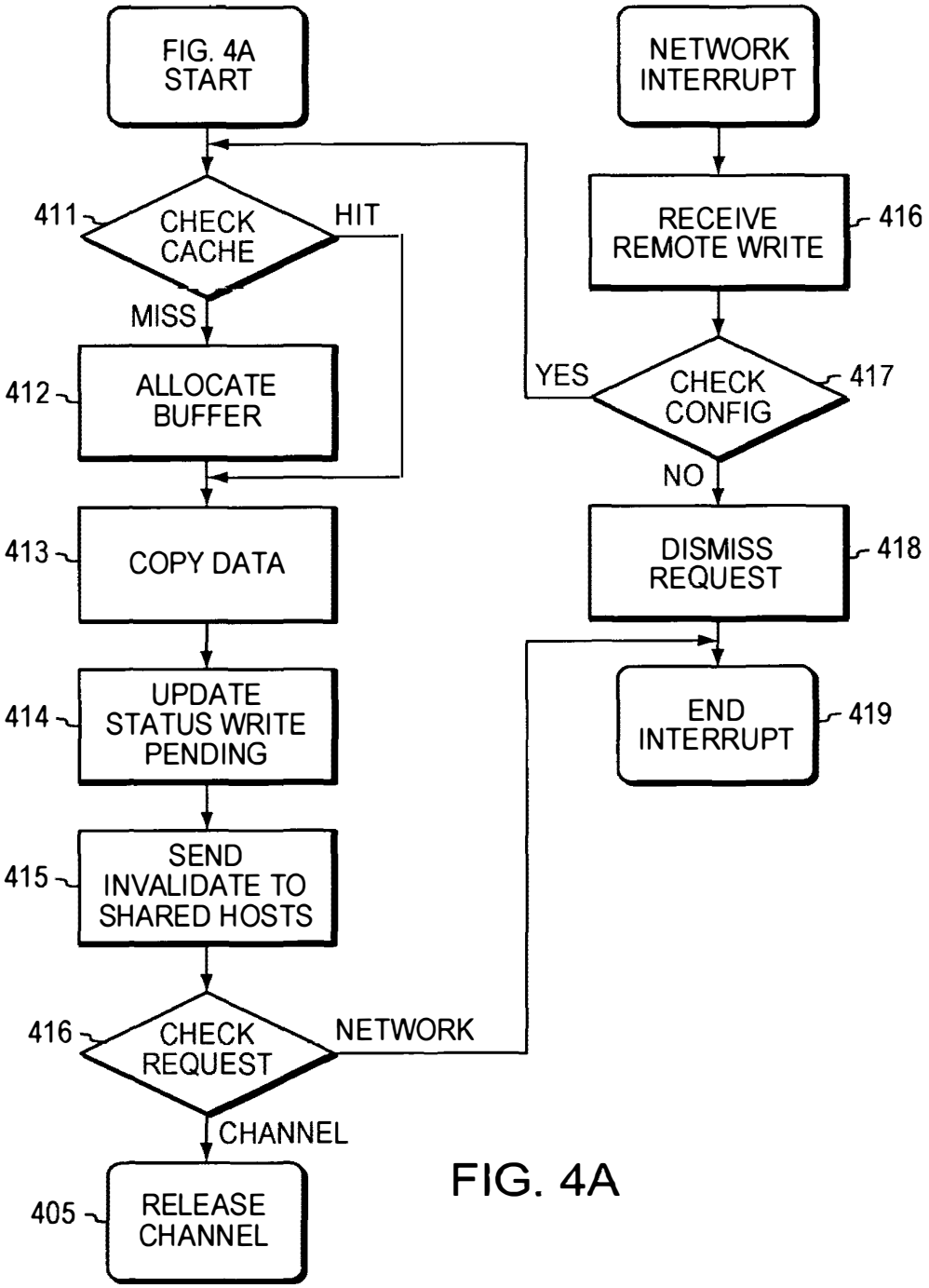

FIG. 4A

OIPE JC67
FEB 2 7 2003
PATENT & TRADEMARK OFFICE

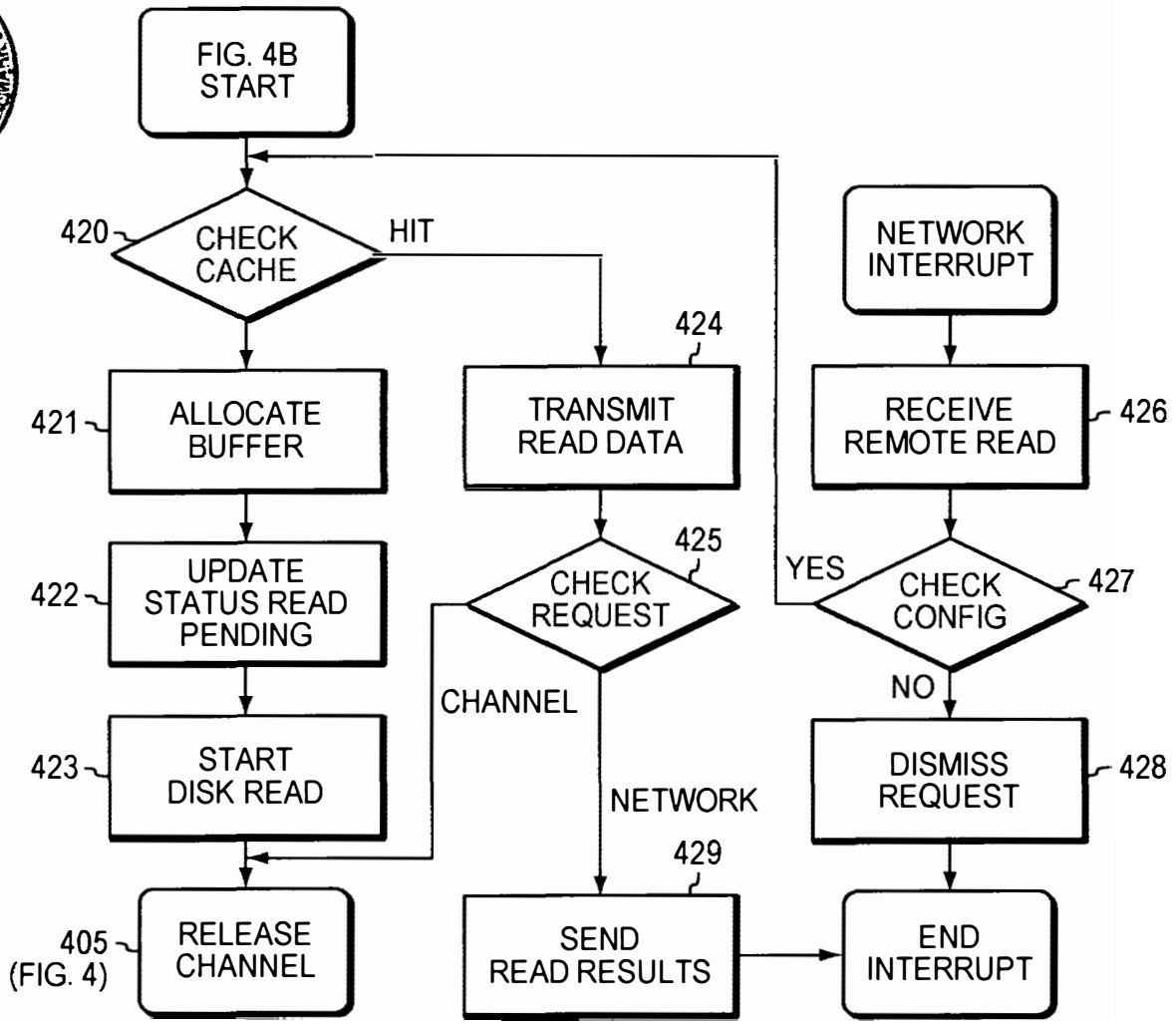

FIG. 4B

OIPE JC67 FEB 27 2003 PATENT & TRADEMARK OFFICE

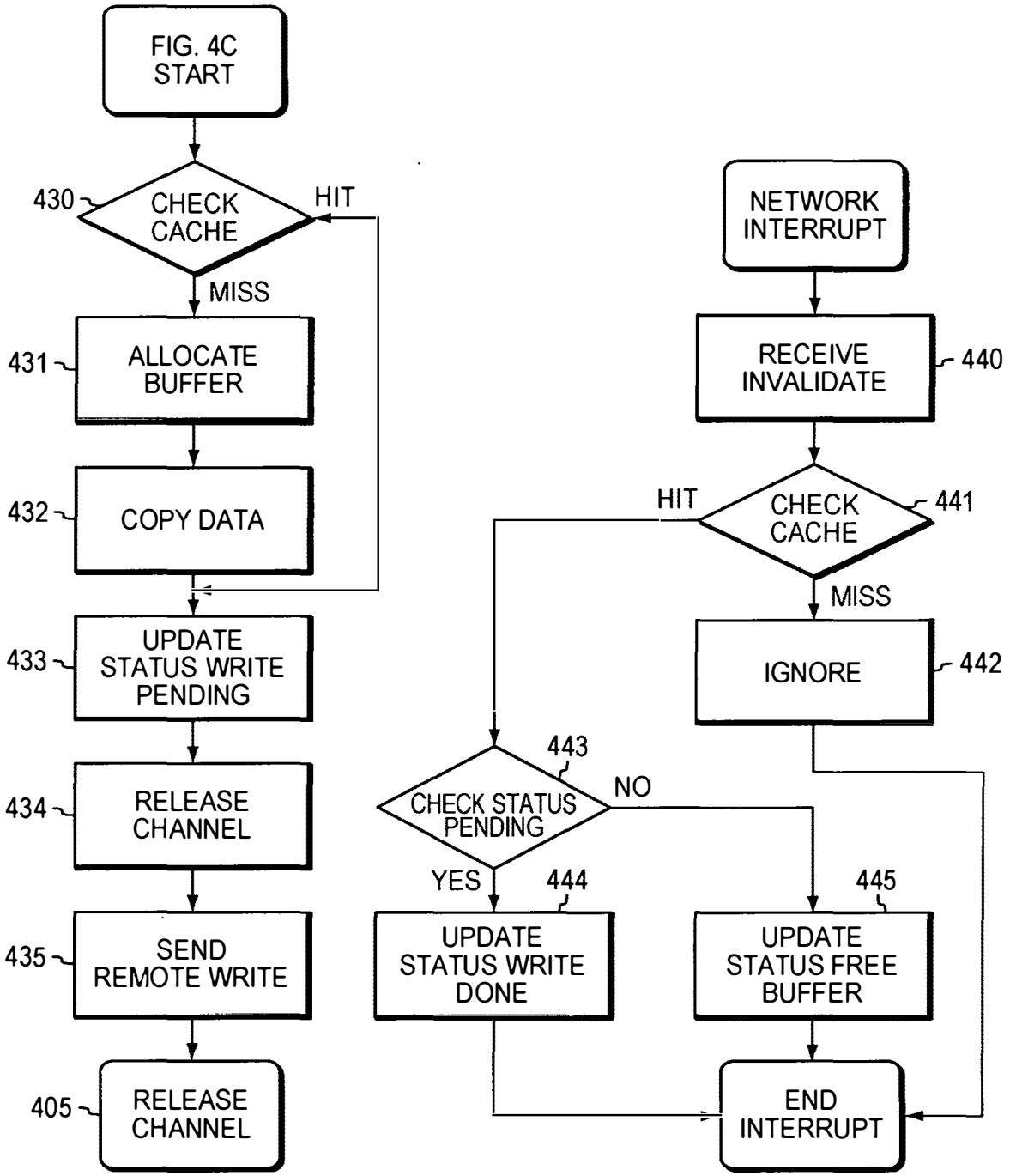

FIG. 4C

OIPE JC67 FEB 2 7 2003 PATENT & TRADEMARK OFFICE

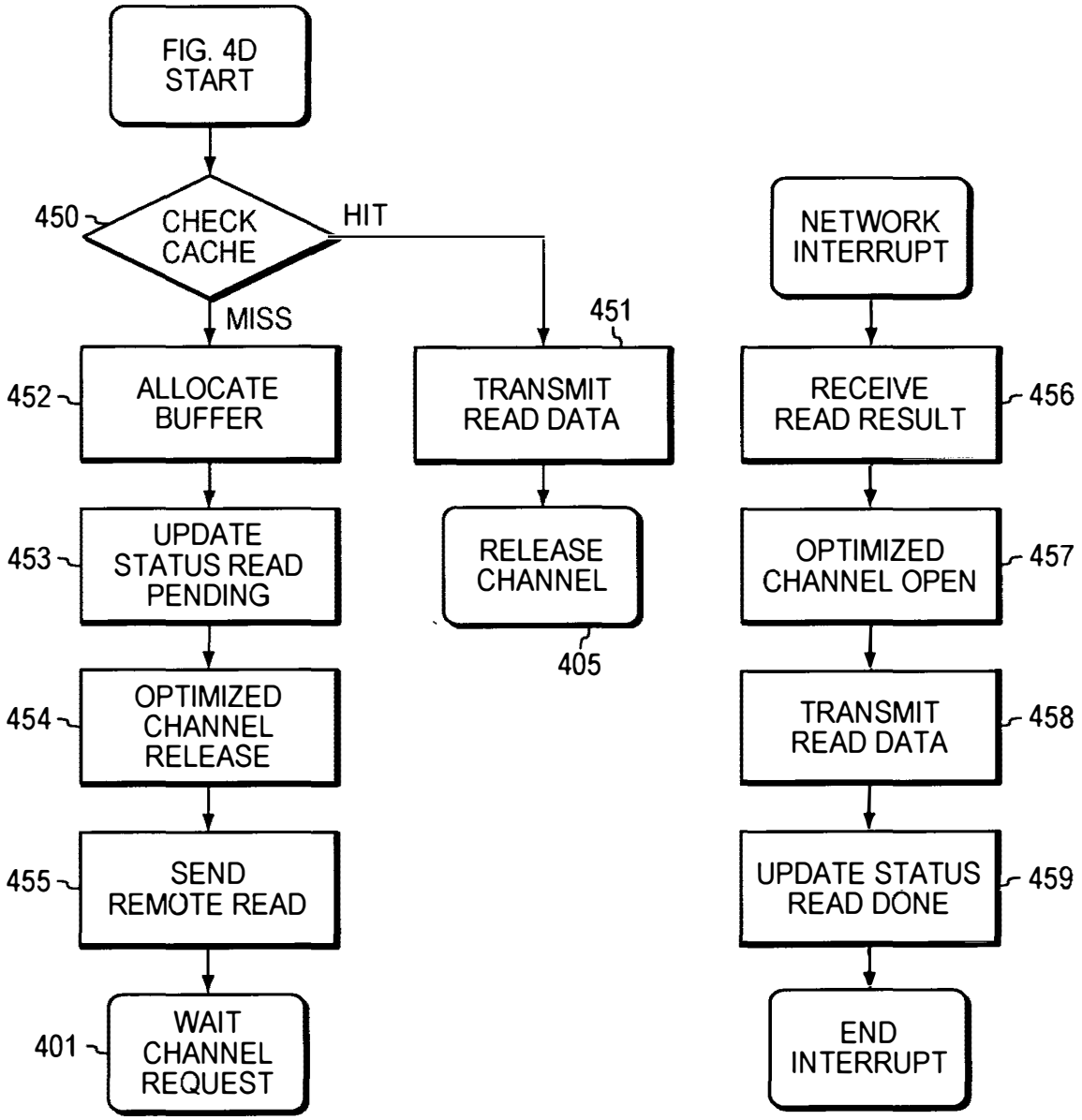

FIG. 4D

OIPE JC67
FEB 27 2003
PATENT & TRADEMARK OFFICE

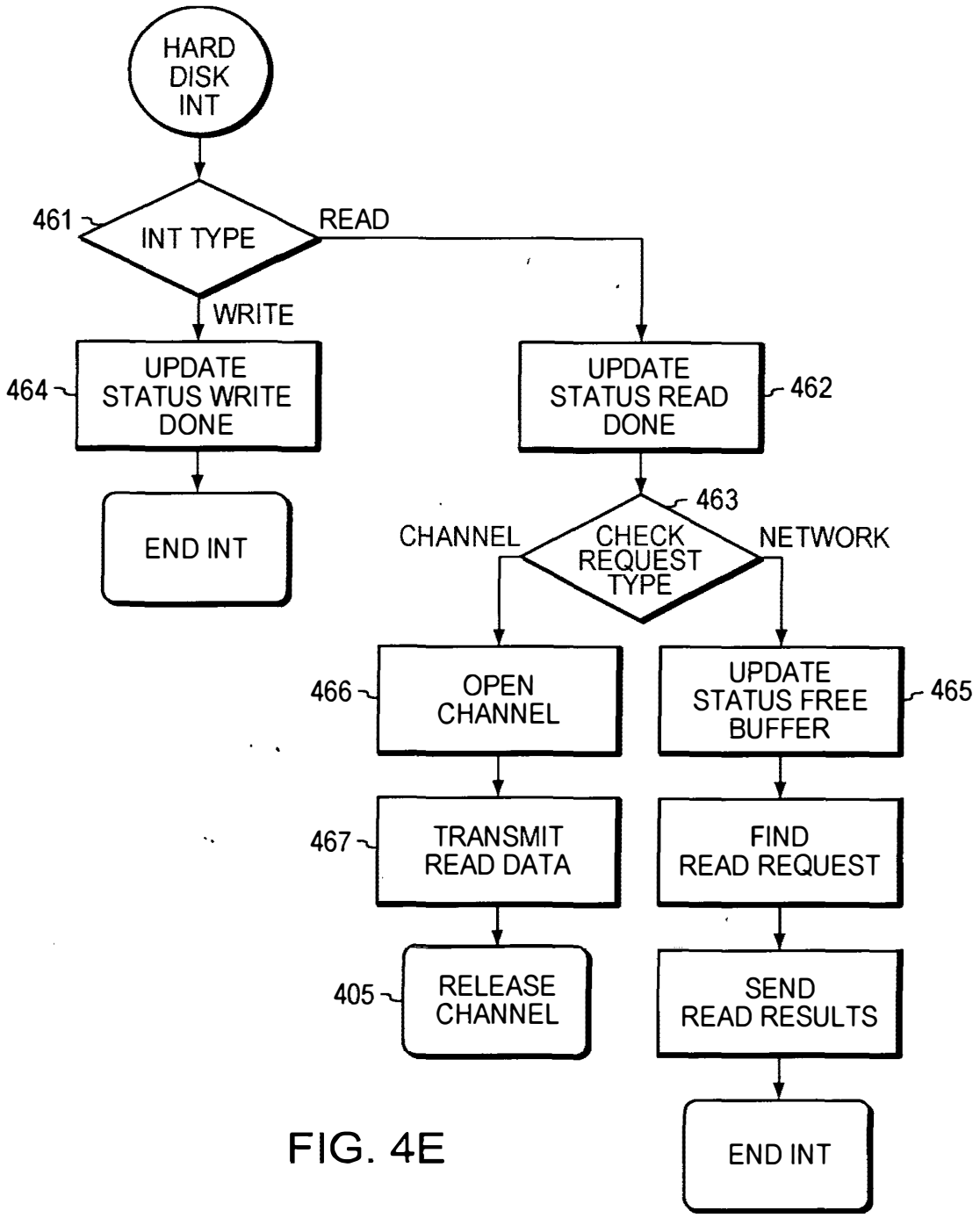

FIG. 4E

OIPE JC67
FEB 2 7 2003
PATENT & TRADEMARK OFFICE

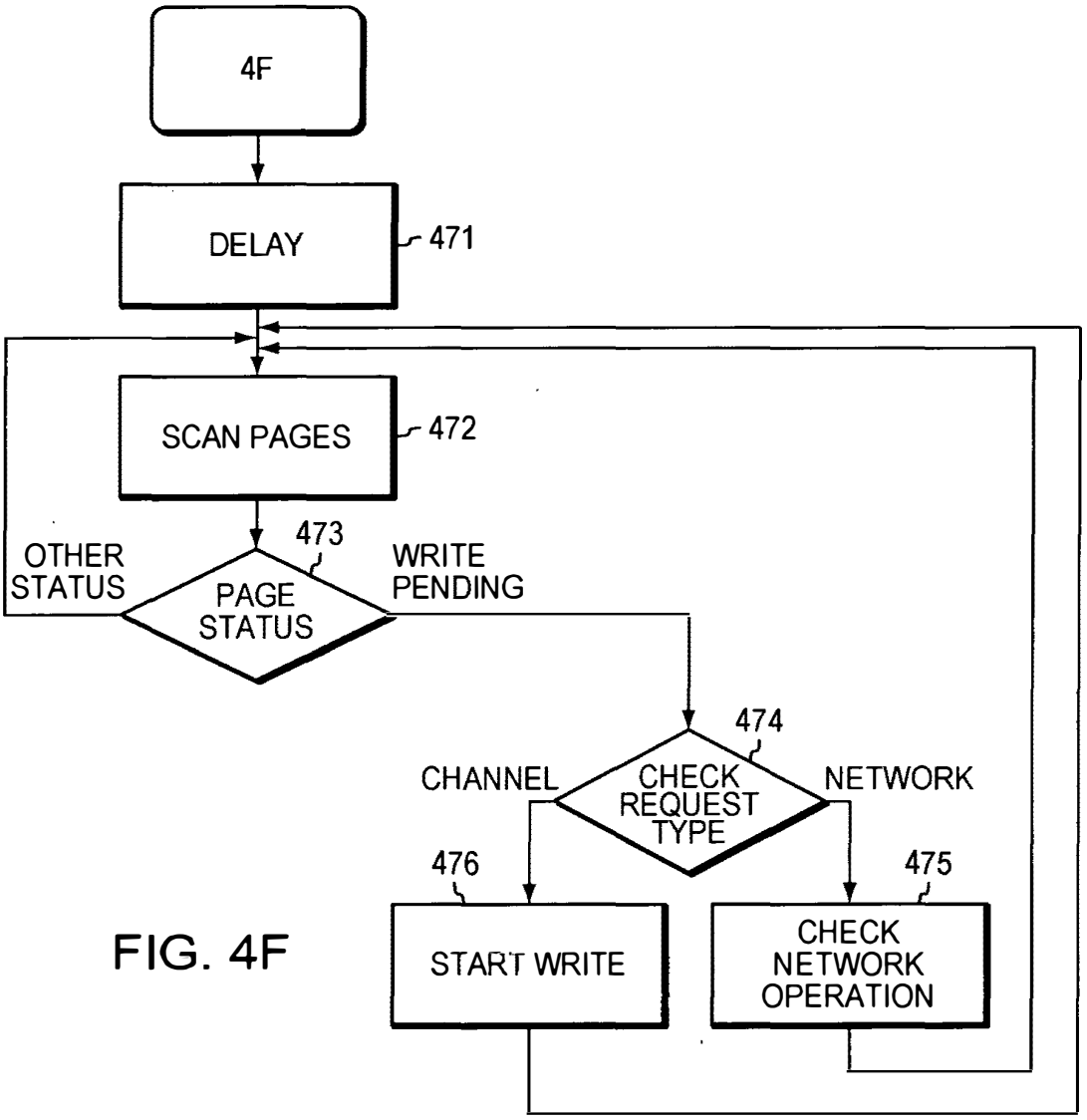

FIG. 4F

OIPE JC67 FEB 27 2003 PATENT & TRADEMARK OFFICE

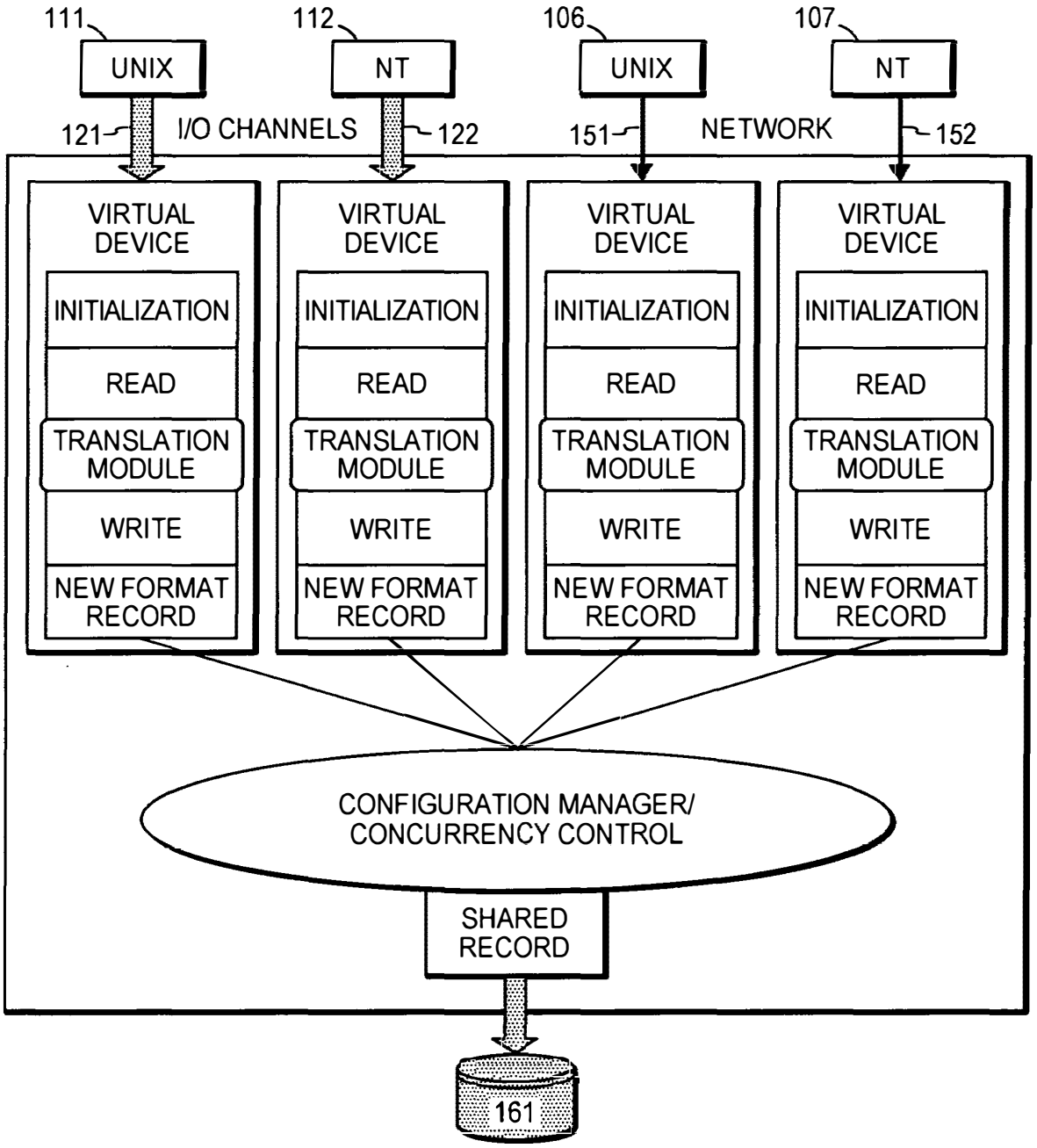

FIG. 5

Sk

UNITED STATES PATENT AND TRADEMARK OFFICE

UNITED STATES DEPARTMENT OF COMMERCE
United States Patent and Trademark Office
Address: COMMISSIONER OF PATENTS AND TRADEMARKS
Washington, D.C. 20231
www.uspto.gov

NOTICE OF ALLOWANCE AND FEE(S) DUE

021323 7590 12/03/2002

TESTA, HURWITZ & THIBEAULT, LLP
HIGH STREET TOWER
125 HIGH STREET
BOSTON, MA 02110

EXAMINER
NGUYEN, THAN VINH

ART UNIT	CLASS-SUBCLASS
2187	711-149000

DATE MAILED: 12/03/2002

APPLICATION NO.	FILING DATE	FIRST NAMED INVENTOR	ATTORNEY DOCKET NO.	CONFIRMATION NO.
09/236,409	01/22/1999	ILYA GERTNER		1514

TITLE OF INVENTION: DATA STORAGE SYSTEM COMPRISING A NETWORK OF PCS AND METHOD USING SAME

APPLN. TYPE	SMALL ENTITY	ISSUE FEE	PUBLICATION FEE	TOTAL FEE(S) DUE	DATE DUE
nonprovisional	YES	$640	$0	$640	03/03/2003

THE APPLICATION IDENTIFIED ABOVE HAS BEEN EXAMINED AND IS ALLOWED FOR ISSUANCE AS A PATENT. PROSECUTION ON THE MERITS IS CLOSED. THIS NOTICE OF ALLOWANCE IS NOT A GRANT OF PATENT RIGHTS. THIS APPLICATION IS SUBJECT TO WITHDRAWAL FROM ISSUE AT THE INITIATIVE OF THE OFFICE OR UPON PETITION BY THE APPLICANT. SEE 37 CFR 1.313 AND MPEP 1308.

THE ISSUE FEE AND PUBLICATION FEE (IF REQUIRED) MUST BE PAID WITHIN THREE MONTHS FROM THE MAILING DATE OF THIS NOTICE OR THIS APPLICATION SHALL BE REGARDED AS ABANDONED. THIS STATUTORY PERIOD CANNOT BE EXTENDED. SEE 35 U.S.C. 151. THE ISSUE FEE DUE INDICATED ABOVE REFLECTS A CREDIT FOR ANY PREVIOUSLY PAID ISSUE FEE APPLIED IN THIS APPLICATION. THE PTOL-85B (OR AN EQUIVALENT) MUST BE RETURNED WITHIN THIS PERIOD EVEN IF NO FEE IS DUE OR THE APPLICATION WILL BE REGARDED AS ABANDONED.

HOW TO REPLY TO THIS NOTICE:

I. Review the SMALL ENTITY status shown above.

If the SMALL ENTITY is shown as YES, verify your current SMALL ENTITY status:

A. If the status is the same, pay the TOTAL FEE(S) DUE shown above.

B. If the status is changed, pay the PUBLICATION FEE (if required) and twice the amount of the ISSUE FEE shown above and notify the United States Patent and Trademark Office of the change in status, or

If the SMALL ENTITY is shown as NO:

A. Pay TOTAL FEE(S) DUE shown above, or

B. If applicant claimed SMALL ENTITY status before, or is now claiming SMALL ENTITY status, check the box below and enclose the PUBLICATION FEE and 1/2 the ISSUE FEE shown above.

☐ Applicant claims SMALL ENTITY status. See 37 CFR 1.27.

II. PART B - FEE(S) TRANSMITTAL should be completed and returned to the United States Patent and Trademark Office (USPTO) with your ISSUE FEE and PUBLICATION FEE (if required). Even if the fee(s) have already been paid, Part B - Fee(s) Transmittal should be completed and returned. If you are charging the fee(s) to your deposit account, section "4b" of Part B - Fee(s) Transmittal should be completed and an extra copy of the form should be submitted.

III. All communications regarding this application must give the application number. Please direct all communications prior to issuance to Box ISSUE FEE unless advised to the contrary.

IMPORTANT REMINDER: Utility patents issuing on applications filed on or after Dec. 12, 1980 may require payment of maintenance fees. It is patentee's responsibility to ensure timely payment of maintenance fees when due.

PTOL-85 (REV. 04-02) Approved for use through 01/31/2004.

Google Exhibit 1002
Google v. LS Cloud Storage Technologies
IPR2023-00777, Page 51 of 280

PART B - FEE(S) TRANSMITTAL

Complete and send this form, together with applicable fee(s), to: Mail Box ISSUE FEE
Commissioner for Patents
Washington, D.C. 20231
Fax (703)746-4000

INSTRUCTIONS: This form should be used for transmitting the ISSUE FEE and PUBLICATION FEE (if required). Blocks 1 through 4 should be completed where appropriate. All further correspondence including the Patent, advance orders and notification of maintenance fees will be mailed to the current correspondence address as indicated unless corrected below or directed otherwise in Block 1, by (a) specifying a new correspondence address; and/or (b) indicating a separate "FEE ADDRESS" for maintenance fee notifications.

CURRENT CORRESPONDENCE ADDRESS (Note: Legibly mark-up with any corrections or use Block 1)

021323 7590 12/03/2002

TESTA, HURWITZ & THIBEAULT, LLP
HIGH STREET TOWER
125 HIGH STREET
BOSTON, MA 02110

Note: A certificate of mailing can only be used for domestic mailings of the Fee(s) Transmittal. This certificate cannot be used for any other accompanying papers. Each additional paper, such as an assignment or formal drawing, must have its own certificate of mailing or transmission.

Certificate of Mailing or Transmission

I hereby certify that this Fee(s) Transmittal is being deposited with the United States Postal Service with sufficient postage for first class mail in an envelope addressed to the Box Issue Fee address above, or being facsimile transmitted to the USPTO, on the date indicated below.

(Depositor's name)

(Signature)

(Date)

APPLICATION NO.	FILING DATE	FIRST NAMED INVENTOR	ATTORNEY DOCKET NO.	CONFIRMATION NO.
09/236,409	01/22/1999	ILYA GERTNER		1514

TITLE OF INVENTION: DATA STORAGE SYSTEM COMPRISING A NETWORK OF PCS AND METHOD USING SAME

APPLN. TYPE	SMALL ENTITY	ISSUE FEE	PUBLICATION FEE	TOTAL FEE(S) DUE	DATE DUE
nonprovisional	YES	$640	$0	$640	03/03/2003

EXAMINER	ART UNIT	CLASS-SUBCLASS
NGUYEN, THAN VINH	2187	711-149000

1. Change of correspondence address or indication of "Fee Address" (37 CFR 1.363).

❑ Change of correspondence address (or Change of Correspondence Address form PTO/SB/122) attached.

❑ "Fee Address" indication (or "Fee Address" Indication form PTO/SB/47; Rev 03-02 or more recent) attached. **Use of a Customer Number is required.**

2. For printing on the patent front page, list (1) the names of up to 3 registered patent attorneys or agents OR, alternatively, (2) the name of a single firm (having as a member a registered attorney or agent) and the names of up to 2 registered patent attorneys or agents. If no name is listed, no name will be printed.

1_____

2_____

3_____

3. ASSIGNEE NAME AND RESIDENCE DATA TO BE PRINTED ON THE PATENT (print or type)

PLEASE NOTE: Unless an assignee is identified below, no assignee data will appear on the patent. Inclusion of assignee data is only appropriate when an assignment has been previously submitted to the USPTO or is being submitted under separate cover. Completion of this form is NOT a substitute for filing an assignment.

(A) NAME OF ASSIGNEE (B) RESIDENCE: (CITY and STATE OR COUNTRY)

Please check the appropriate assignee category or categories (will not be printed on the patent) ❑ individual ❑ corporation or other private group entity ❑ government

4a. The following fee(s) are enclosed:

❑ Issue Fee

❑ Publication Fee

❑ Advance Order - # of Copies _____

4b. Payment of Fee(s):

❑ A check in the amount of the fee(s) is enclosed.

❑ Payment by credit card. Form PTO-2038 is attached.

❑ The Commissioner is hereby authorized by charge the required fee(s), or credit any overpayment, to Deposit Account Number _____(enclose an extra copy of this form).

Commissioner for Patents is requested to apply the Issue Fee and Publication Fee (if any) or to re-apply any previously paid issue fee to the application identified above.

(Authorized Signature) (Date)

NOTE: The Issue Fee and Publication Fee (if required) will not be accepted from anyone other than the applicant; a registered attorney or agent; or the assignee or other party in interest as shown by the records of the United States Patent and Trademark Office.

This collection of information is required by 37 CFR 1.311. The information is required to obtain or retain a benefit by the public which is to file (and by the USPTO to process) an application. Confidentiality is governed by 35 U.S.C. 122 and 37 CFR 1.14. This collection is estimated to take 12 minutes to complete, including gathering, preparing, and submitting the completed application form to the USPTO. Time will vary depending upon the individual case. Any comments on the amount of time you require to complete this form and/or suggestions for reducing this burden, should be sent to the Chief Information Officer, U.S. Patent and Trademark Office, U.S. Department of Commerce, Washington, D.C. 20231. DO NOT SEND FEES OR COMPLETED FORMS TO THIS ADDRESS. SEND TO: Commissioner for Patents, Washington, DC 20231.

Under the Paperwork Reduction Act of 1995, no persons are required to respond to a collection of information unless it displays a valid OMB control number.

TRANSMIT THIS FORM WITH FEE(S)

Google Exhibit 1002
Google v. LS Cloud Storage Technologies
IPR2023-00777, Page 52 of 280

UNITED STATES PATENT AND TRADEMARK OFFICE

UNITED STATES DEPARTMENT OF COMMERCE
United States Patent and Trademark Office
Address: COMMISSIONER OF PATENTS AND TRADEMARKS
Washington, D.C. 20231
www.uspto.gov

APPLICATION NO.	FILING DATE	FIRST NAMED INVENTOR	ATTORNEY DOCKET NO.	CONFIRMATION NO.
09/236,409	01/22/1999	ILYA GERTNER		1514

021323 7590 12/03/2002

TESTA, HURWITZ & THIBEAULT, LLP
HIGH STREET TOWER
125 HIGH STREET
BOSTON, MA 02110
UNITED STATES

EXAMINER
NGUYEN, THAN VINH

ART UNIT	PAPER NUMBER
2187	

DATE MAILED: 12/03/2002

Determination of Patent Term Extension under 35 U.S.C. 154 (b)

(application filed after June 7, 1995 but prior to May 29, 2000)

The patent term extension is 0 days. Any patent to issue from the above identified application will include an indication of the 0 day extension on the front page.

If a continued prosecution application (CPA) was filed in the above-identified application, the filing date that determines patent term extension is the filing date of the most recent CPA.

Applicant will be able to obtain more detailed information by accessing the Patent Application Information Retrieval (PAIR) system. (http://pair.uspto.gov)

Any questions regarding the patent term extension or adjustment determination should be directed to the Office of Patent Legal Administration at (703)305-1383.

PTOL-85 (REV. 04-02) Approved for use through 01/31/2004.

Google Exhibit 1002
Google v. LS Cloud Storage Technologies
IPR2023-00777, Page 53 of 280

UNITED STATES PATENT AND TRADEMARK OFFICE

UNITED STATES DEPARTMENT OF COMMERCE
United States Patent and Trademark Office
Address: COMMISSIONER OF PATENTS AND TRADEMARKS
Washington, D.C. 20231
www.uspto.gov

APPLICATION NO.	FILING DATE	FIRST NAMED INVENTOR	ATTORNEY DOCKET NO.	CONFIRMATION NO.
09/236,409	01/22/1999	ILYA GERTNER		1514

021323 7590 12/03/2002

TESTA, HURWITZ & THIBEAULT, LLP
HIGH STREET TOWER
125 HIGH STREET
BOSTON, MA 02110
UNITED STATES

EXAMINER
NGUYEN, THAN VINH

ART UNIT	PAPER NUMBER
2187	

DATE MAILED: 12/03/2002

Notice of Possible Fee Increase on October 1, 2002

If a reply to a "Notice of Allowance and Fee(s) Due" is filed in the Office on or after October 1, 2002, then the amount due may be higher than that set forth in the "Notice of Allowance and Fee(s) Due" since there may be an increase in fees effective on October 1, 2002. See Revision of Patent and Trademark Fees for Fiscal Year 2003; Notice of Proposed Rulemaking, 67 Fed. Reg. 30634, 30636 (May 7, 2002). Although a change to the amount of the publication fee is not currently proposed for October 2002, if the issue fee or publication fee is to be paid on or after October 1, 2002, applicant should check the USPTO web site for the current fees before submitting the payment. The USPTO Internet address for the fee schedule is: http://www.uspto.gov/main/howtofees.htm.

If the issue fee paid is the amount shown on the "Notice of Allowance and Fee(s) Due," but not the correct amount in view of any fee increase, a "Notice to Pay Balance of Issue Fee" will be mailed to applicant. In order to avoid processing delays associated with mailing of a "Notice to Pay Balance of Issue Fee," if the response to the Notice of Allowance and Fee(s) due form is to be filed on or after October 1, 2002 (or mailed with a certificate of mailing on or after October 1, 2002), the issue fee paid should be the fee that is required at the time the fee is paid. If the issue fee was previously paid, and the response to the "Notice of Allowance and Fee(s) Due" includes a request to apply a previously-paid issue fee to the issue fee now due, then the difference between the issue fee amount at the time the response is filed and the previously paid issue fee should be paid. See Manual of Patent Examining Procedure, Section 1308.01 (Eighth Edition, August 2001).

Questions relating to issue and publication fee payments should be directed to the Customer Service Center of the Office of Patent Publication at (703) 305-8283.

PTOL-85 (REV. 04-02) Approved for use through 01/31/2004.

Google Exhibit 1002
Google v. LS Cloud Storage Technologies
IPR2023-00777, Page 54 of 280

Notice of Allowability	Application No.	Applicant(s)
	09/236,409	GERTNER, ILYA
	Examiner	Art Unit
	Than Nguyen	2187

-- The MAILING DATE of this communication appears on the cover sheet with the correspondence address--

All claims being allowable, PROSECUTION ON THE MERITS IS (OR REMAINS) CLOSED in this application. If not included herewith (or previously mailed), a Notice of Allowance (PTOL-85) or other appropriate communication will be mailed in due course. **THIS NOTICE OF ALLOWABILITY IS NOT A GRANT OF PATENT RIGHTS.** This application is subject to withdrawal from issue at the initiative of the Office or upon petition by the applicant. See 37 CFR 1.313 and MPEP 1308.

1. ☒ This communication is responsive to *10/18/02.*
2. ☒ The allowed claim(s) is/are *1-4,12 and 13.*
3. ☐ The drawings filed on _____ are accepted by the Examiner.
4. ☐ Acknowledgment is made of a claim for foreign priority under 35 U.S.C. § 119(a)-(d) or (f).
   a) ☐ All b) ☐ Some* c) ☐ None of the:
      1. ☐ Certified copies of the priority documents have been received.
      2. ☐ Certified copies of the priority documents have been received in Application No. _____ .
      3. ☐ Copies of the certified copies of the priority documents have been received in this national stage application from the International Bureau (PCT Rule 17.2(a)).

   * Certified copies not received: _____.
5. ☐ Acknowledgment is made of a claim for domestic priority under 35 U.S.C. § 119(e) (to a provisional application).
   (a) ☐ The translation of the foreign language provisional application has been received.
6. ☐ Acknowledgment is made of a claim for domestic priority under 35 U.S.C. §§ 120 and/or 121.

Applicant has THREE MONTHS FROM THE "MAILING DATE" of this communication to file a reply complying with the requirements noted below. Failure to timely comply will result in ABANDONMENT of this application. **THIS THREE-MONTH PERIOD IS NOT EXTENDABLE**

7. ☐ A SUBSTITUTE OATH OR DECLARATION must be submitted. Note the attached EXAMINER'S AMENDMENT or NOTICE OF INFORMAL PATENT APPLICATION (PTO-152) which gives reason(s) why the oath or declaration is deficient.

8. ☒ CORRECTED DRAWINGS must be submitted.
   (a) ☐ including changes required by the Notice of Draftsperson's Patent Drawing Review (PTO-948) attached
      1) ☐ hereto or 2) ☒ to Paper No. *6*.
   (b) ☐ including changes required by the proposed drawing correction filed _____, which has been approved by the Examiner.
   (c) ☐ including changes required by the attached Examiner's Amendment / Comment or in the Office action of Paper No. _____.

Identifying indicia such as the application number (see 37 CFR 1.84(c)) should be written on the drawings in the top margin (not the back) of each sheet. The drawings should be filed as a separate paper with a transmittal letter addressed to the Official Draftsperson.

9. ☐ DEPOSIT OF and/or INFORMATION about the deposit of BIOLOGICAL MATERIAL must be submitted. Note the attached Examiner's comment regarding REQUIREMENT FOR THE DEPOSIT OF BIOLOGICAL MATERIAL.

Attachment(s)

1☐ Notice of References Cited (PTO-892)
2☐ Notice of Informal Patent Application (PTO-152)
3☐ Notice of Draftperson's Patent Drawing Review (PTO-948)
4☐ Interview Summary (PTO-413), Paper No.____ .
5☐ Information Disclosure Statements (PTO-1449), Paper No. ____.
6☐ Examiner's Amendment/Comment
7☐ Examiner's Comment Regarding Requirement for Deposit of Biological Material
8☒ Examiner's Statement of Reasons for Allowance
9☐ Other .

Google Exhibit 1002
Google v. LS Cloud Storage Technologies
IPR2023-00777, Page 55 of 280

DETAILED ACTION

Continued Examination Under 37 CAR 1.114

1. A request for continued examination under 37 CAR 1.114, including the fee set forth in 37 CAR 1.17(e), was filed in this application after final rejection. Since this application is eligible for continued examination under 37 CAR 1.114, and the fee set forth in 37 CAR 1.17(e) has been timely paid, the finality of the previous Office action has been withdrawn pursuant to 37 CAR 1.114. Applicant's submission filed on 10/18/02 has been entered.

2. The amendment, filed 9/19/02, has been entered.

3. Applicant amended claims 1,2,3,4 and added new claims (5,6). The new claims 5,6 are renumbered as 12,13 since there were claims up to 11 in the previous amendments.

4. Claims 1-4,12,13 remain pending.

5. The amended claims are allowable over the prior arts of record.

Allowable Subject Matter

6. Claims 1-4,12,13 are allowed.

7. The following is an examiner's statement of reasons for allowance: the prior art of record does not teach the claimed computer comprising (emphasis in bold):

an I/O channel adapter for accepting an incoming I/O request from a host;

configuration manager software for enabling the I/O channel adapter to decide whether to route the request to cache, (ii) to route the request to disk, or (iii) to reject the request;

a network adapter for handling network control traffic;

a cache memory;

front end software for handling I/O requests arriving at the I/O channel adapter or the network adapter;

cache manager software, responsive to the front-end software, for handling data stored in the cache memory; and

back-end software, responsive to the configuration manager software, for handling reads and writes to disks corresponding to the I/O requests but without communication over the I/O channel adapter, thereby separating disk operations from network and I/O traffic.

8. Claims 2,4,12,13 are also allowable for incorporating the limitations of claim 1, and further limitations.

9. As to claim 3, the prior art does not teach the claimed method of accessing a remove disk over a computer disk without incurring network overhead, the method comprising the steps of (emphasis in bold):

a. causing a local host to issue a request over an I/O channel to a local computer;

b. providing a configuration manager on the local computer, the configuration manager routing the request to a remote computer via the computer network;

c. causing the remote computer to check the request against a volume access table;

d. causing the remote computer to perform an I/O operation on a disk located on the remote computer and to return data to the local computer;

e. causing the local computer to provide the returned data to the local host via the I/O channel; and

f. **causing the local computer to check the data against the volume access table to ensure consistency of the data on the local and the remote computers**.

Any comments considered necessary by applicant must be submitted no later than the payment of the issue fee and, to avoid processing delays, should preferably accompany the issue fee. Such submissions should be clearly labeled "Comments on Statement of Reasons for Allowance."

Conclusion

10. Any inquiry concerning this communication or earlier communications from the examiner should be directed to Than Nguyen whose telephone number is (703) 305-3866. The examiner can normally be reached on M-F from 8:00 a.m. to 3:00 p.m. EST.

11. Any inquiry of a general nature or relating to the status of this application should be directed to the Group receptionist whose telephone number is (703) 305-9600.

12. The fax phone number for Art Unit 2187 is 703-308-9051 or 703-308-9052.

Art Unit: 2187

Than Nguyen

Primary Patent Examiner

November 27, 2002

WEST

Help | Logout | Interrupt

Main Menu | Search Form | Posting Counts | Show S Numbers | Edit S Numbers | Preferences | Cases

Search Results -

Terms	Documents
l10 and L11	151

Database:
US Patents Full-Text Database
US Pre-Grant Publication Full-Text Database
JPO Abstracts Database
EPO Abstracts Database
Derwent World Patents Index
IBM Technical Disclosure Bulletins

Search: L12

Refine Search

Recall Text | Clear

Search History

DATE: Wednesday, November 27, 2002 Printable Copy Create Case

Set Name side by side	Query	Hit Count	Set Name result set
	DB=USPT; PLUR=YES; OP=OR		
L12	l10 and L11	151	L12
L11	((711/$)!.CCLS.)	13563	L11
L10	(l6 or l7) and l9	452	L10
L9	l5 and l8	26556	L9
L8	l1 and l2 and l4	27745	L8
L7	cache adj3 coherency	1534	L7
L6	data adj3 consistency	1124	L6
L5	volume access table	1556340	L5
L4	host	119541	L4
L3	cache adj2 (manager or controller)	3320	L3
L2	access mode	954799	L2
L1	network adapt!r	325471	L1

END OF SEARCH HISTORY

UNITED STATES
PATENT AND
TRADEMARK OFFICE

Commissioner for Patents
Washington, DC 20231
www.uspto.gov

APPLICATION NUMBER	FILING DATE	FIRST NAMED APPLICANT	ATTY. DOCKET NO./TITLE
09/236,409	01/22/1999	ILYA GERTNER	

CONFIRMATION NO. 1514

OC000000009021583

ILYA GERTNER
NETWORK DISK INC
5 GASLIGHT LANE
FRAMINGHAM, MA 01701

Date Mailed: 10/28/2002

NOTICE REGARDING CHANGE OF POWER OF ATTORNEY

This is in response to the Power of Attorney filed 10/18/2002.

- The Power of Attorney to you in this application has been revoked by the assignee who has intervened as provided by 37 CFR 3.71. Future correspondence will be mailed to the new address of record(37 CFR 1.33).

ANTOIN L HAYES
2100 (703) 305-5795

OFFICE COPY

UNITED STATES
PATENT AND
TRADEMARK OFFICE

Commissioner for Patents
Washington, DC 20231
www.uspto.gov

APPLICATION NUMBER	FILING DATE	FIRST NAMED APPLICANT	ATTY. DOCKET NO./TITLE
09/236,409	01/22/1999	ILYA GERTNER	

CONFIRMATION NO. 1514

OC000000009021594

021323
TESTA, HURWITZ & THIBEAULT, LLP
HIGH STREET TOWER
125 HIGH STREET
BOSTON, MA 02110

Date Mailed: 10/28/2002

NOTICE OF ACCEPTANCE OF POWER OF ATTORNEY

This is in response to the Power of Attorney filed 10/18/2002.

The Power of Attorney in this application is accepted. Correspondence in this application will be mailed to the above address as provided by 37 CFR 1.33.

ANTOIN L HAYES
2100 (703) 305-5795

OFFICE COPY

RECEIVED
0[illegible]2 5 2002
Technology Center 2100

OIPE JC95
OCT 1 8 2002
PATENT & TRADEMARK OFFICE

Express Mail Label No. EV093436042US

#17 A. Hayes 10/28/02

PATENT
Attorney Docket No. NDI-001

IN THE UNITED STATES PATENT AND TRADEMARK OFFICE

APPLICANT(S):	Ilya Gertner	
SERIAL NO.:	09/236,409	GROUP NO.:2187
FILED:	January 22, 1999	EXAMINER: Than Vinh Nguyen
TITLE:	DATA STORAGE SYSTEM COMPRISING A NETWORK OF PCs AND METHOD OF USING SAME	

Commissioner for Patents
Washington, D.C. 20231

POWER OF ATTORNEY BY ASSIGNEE OF ENTIRE INTEREST REVOCATION OF PRIOR POWERS AND NEW POWER OF ATTORNEY

Sir:

As owner of record of the entire interest of the above-identified

☒ application,

☐ patent,

all powers of attorney previously given are hereby revoked, and

the following attorneys and/or agents are hereby appointed to prosecute and transact all business in the U.S. Patent and Trademark Office connected therewith.

Michael J. Bastian	Reg. No. 47,411
Steven M. Bauer	Reg. No. 31,481
Mark L. Beloborodov	Reg. No. 50,773
John V. Bianco	Reg. No. 36,748
Robert S. Blasi	Reg. No. 50,389
Michael H. Brodowski	Reg. No. 41,640
Jennifer A. Camacho	Reg. No. 43,526
Joseph A. Capraro, Jr.	Reg. No. 36,471
Fangli Chen	Reg. No. P-51,551
Christopher H. Chung	Reg. No. 50,351
John J. Cotter	Reg. No. 38,116
Robert V. Donahoe	Reg. No. 46,667
Brian A. Fairchild	Reg. No. 48,645
John V. Forcier	Reg. No. 42,545
Steven J. Frank	Reg. No. 33,497
Kia L. Freeman	Reg. No. 47,577
Christopher J. Frerking	Reg. No. 42,557
Brian M. Gaff	Reg. No. 44,691
Duncan A. Greenhalgh	Reg. No. 38,678

Ira Heffan	Reg. No. 41,059
Douglas J. Kline	Reg. No. 35,574
John D. Lanza	Reg. No. 40,060
Leigh J. Martinson	Reg. No. 50,749
William A. Meunier	Reg. No. 41,193
Thomas C. Meyers	Reg. No. 36,989
Joseph B. Milstein	Reg. No. 42,897
Ronda P. Moore	Reg. No. 44,244
Jeremy Oczek	Reg. No. 50,794
Jamie H. Rose	Reg. No. 45,054
David L. Schuler	Reg. No. 51,190
Christopher W. Stamos	Reg. No. 35,370
Diana M. Steel	Reg. No. 43,153
Joseph P. Sullivan	Reg. No. 45,349
Robert J. Tosti	Reg. No. 35,393
Thomas A. Turano	Reg. No. 35,722
Natasha C. Us	Reg. No. 44,381
Christine C. Vito	Reg. No. 39,061
Patrick R.H. Waller	Reg. No. 41,418
Daniel A. Wilson	Reg. No. 45,508
Gerald E. Worth	Reg. No. 45,238
Yin P. Zhang	Reg. No. 44,372
Stephanie M. Zierten	Reg. No. 52,397

☐ Attached as part of this power of attorney is the authorization of the above-named attorneys/agents to accept and follow instructions from my representatives.

Assignee also hereby grants additional Powers of Attorney to the attorneys and/or agents named above to file and prosecute foreign national patent applications in any and all countries of the world, a regional patent application under the European Patent Convention and/or an international application under the Patent Cooperation Treaty based upon the above-identified application, including a power to meet all designated office requirements for designated states.

All future correspondence should be sent to:

Patent Administrator
Testa, Hurwitz & Thibeault, LLP
High Street Tower
125 High Street
Boston, MA 02110

PLEASE ASSIGN PTO CUSTOMER NUMBER 021323 TO THIS APPLICATION

The assignee of record of the entire interest of the above-identified

☐ application

☐ patent

is

Name of assignee of entire interest

Address

☐ Recorded in PTO on
Reel No.:
Frame No.:

☐ Recorded herewith

Respectfully submitted,

Dated: October 17, 2002

Ilya Gertner

Ilya Gertner

FRANKSJ\9308\4.2514203_1

10-21-02

RECEIVED

OCT 25 2002

Technology Center 2100

RCE/2700

OCT 18 2002

PATENT & TRADEMARK OFFICE

Express Mail Mailing Label No. EV093436042US

REQUEST FOR CONTINUED EXAMINATION (RCE) TRANSMITTAL

ADDRESS TO: **Box RCE** **Assistant Commissioner for Patents** **Washington, D.C. 20231**	Application No.	09/236,409
	Filing Date	January 22, 1999
	First Named Inventor	Ilya Gertner
	Group Art Unit	2187
	Examiner Name	Than Vinh Nguyen
	Attorney Docket No.	NDI-001

This is a Request for Continued Examination (RCE) under 37 C.F.R. § 1.114 of the above-identified application.

NOTES

RCE v. CPA: 37 C.F.R. § 1.114 is effective on May 29, 2000. If the above-identified application was filed prior to May 29, 2000, applicant may wish to consider filing a continued prosecution application (CPA) under 37 C.F.R. § 1.53(d) instead of a RCE to be eligible for the patent term adjustment provisions of the AIPA.

FEE AND SUBMISSION REQUIRED: A submission as used in this section includes, but is not limited to, an information disclosure statement, an amendment to the written description, claims, or drawings, new arguments, or new evidence in support of patentability. If reply to an Office action under 35 U.S.C. 132 is outstanding, the submission must meet the reply requirements of § 1.111 (see 37 C.F.R. 1.114 (c)).

RCE APPLIES TO: An application in which prosecution is closed (see 37 C.F.R. § 1.114 (b)).

RCE DOES NOT APPLY TO: (1) A provisional application; (2) an application for a utility or plant patent filed under 35 U.S.C. 111(a) before June 8, 1995; (3) an international application filed under 35 U.S.C. 363 before June 8, 1995; (4) an application for a design patent; or (5) a patent under reexamination (see 37 C.F.R. 1.114(e)).

1. SUBMISSION REQUIRED UNDER 37 C.F.R. § 1.114

a. ☒ Enter and consider the unentered amendment under 37 C.F.R. § 1.116 previously filed on September 19, 2002.
b. ☐ Consider the arguments in the Appeal Brief or Reply Brief previously filed on _____.
c. ☐ Amendment/Response enclosed.
d. ☐ Affidavit(s)/Declaration(s) enclosed.
e. ☐ Information Disclosure Statement (IDS) enclosed.
  i. ☐ PTO-1449
  ii. ☐ Copies of IDS Citations
f. ☐ Other _____

2. RCE FEE REQUIRED UNDER 37 C.F.R. § 1.114

a. ☒ Small entity status
  i. ☐ was established in the prior nonprovisional application.
  ii. ☐ is established herewith by the enclosed written assertion of entitlement to small entity status.
b. ☒ A Petition and Fee for Extension of Time for 1 month up to and including October 18, 2002 is enclosed herewith.
c. ☒ A check in the amount of $425.00 is enclosed.
d. ☐ The Commissioner is hereby authorized to charge the required fee(s), i.e., $____, to Deposit Account No. 20-0531.
e. ☒ The Commissioner is hereby authorized to credit overpayments or charge any additional fees required for this submission under 37 C.F.R. §§ 1.16 and 1.17 to Deposit Account No. 20-0531.

10/22/2002 SSESHE1 00000008 09236409

01 FC:2801 370.00 OP

3. MISCELLANEOUS

a. ☒ Return Receipt Postcard enclosed.
b. ☒ Other: Fee Transmittal enclosed.
c. ☒ Other: Power of Attorney enclosed.

CORRESPONDENCE ADDRESS	SIGNATURE BLOCK
Direct all correspondence to: Patent Administrator Testa, Hurwitz & Thibeault, LLP High Street Tower 125 High Street Boston, MA 02110 Tel. No.: (617) 248-7000 Fax No.: (617) 248-7100	Respectfully submitted, Date: October 18, 2002 Reg. No. 33,497 Tel. No.: (617) 310-8108 Fax No.: (617) 248-7100 Steven J. Frank ~~Attorney for Applicant(s)~~ Testa, Hurwitz & Thibeault, LLP High Street Tower 125 High Street Boston, MA 02110

FRANKSJ\9308\4.2514348_1

Express Mail Label No. EV093436042US

OIPE JC35 OCT 18 2002 PATENT & TRADEMARK OFFICE

FEE TRANSMITTAL
FY 2003

	Complete if Known
Application Serial Number	09/236,409
Filing Date	January 22, 1999
First Named Inventor	Ilya Gertner
Group Art Unit	2187
Examiner Name	Than Vinh Nguyen
Attorney Docket No.	NDI-001

RECEIVED
OCT 2 5 2002
Technology Center 2100

METHOD OF PAYMENT

1. ☒ Payment Enclosed:
   ☒ Check ☐ Money Order ☐ Other

2. ☒ The Commissioner is hereby authorized to credit or charge any fee indicated below for this submission to Deposit Account No. 20-0531.
   - ☐ Required Fees (copy of this sheet enclosed).
   - ☒ Additional fee required under 37 CFR 1.16 and 1.17.
   - ☒ Overpayment Credit.

3. ☐ Applicant claims small entity status.

FEE CALCULATION

1. FILING FEE

Large Entity Fee ($)	Fee Description	Fee Paid
740	Utility filing fee	
330	Design filing fee	
160	Provisional filing fee	

	Number Filed	Number Extra	Rate	Amount
Total Claims		- 20 =	x $ 18.00 =	
Independent Claims		- 3 =	x $ 84.00 =	
☐ Multiple Dependent Claim(s), if any			$280.00 =	

TOTAL:
SMALL ENTITY DISCOUNT:
SUBTOTAL (1) ($)

2. AMENDMENT CLAIM FEES

	Claims Remaining After Amend.	Highest No. Previously Paid For	Present Extra	Rate	Fee Paid
Total		-	=	x $ 18.00 =	
Indep.		-	=	x $ 84.00 =	
☐ First Presentation of Multiple Dep. Claim				+ $280.00 =	

TOTAL: ($)
SMALL ENTITY DISCOUNT: ($)
SUBTOTAL (2) ($)

FEE CALCULATION (continued)

3. ADDITIONAL FEES

Large Entity Fee ($)	Small Entity Fee ($)	Fee Description	Fee Paid
130	65	Surcharge - late filing fee or oath	
50	25	Surcharge - late provisional filing fee or cover sheet	
130	130	Non-English specification	
2,520	2,520	Request for ex parte reexamination	
110	55	Extension for reply within first month	55.00
400	200	Extension for reply within second month	
920	460	Extension for reply within third month	
1440	720	Extension for reply within fourth month	
1960	980	Extension for reply within fifth month	
320	160	Notice of Appeal	
320	160	Filing a brief in support of an appeal	
280	140	Request for oral hearing	
130	130	Petitions to the Commissioner	
180	180	Submission of Information Disclosure Statement	
740	370	Filing a submission after final rejection (37 CFR 1.129(a))	
740	370	For each additional invention to be examined (37 CFR 1.129(b))	
100	100	Certificate of Correction for applicant's error	
Other fee (Specify)		Request for Continued Examination (RCE) Transmittal	370.00
Other fee (Specify)			

SUBTOTAL (3) ($) 425.00

SUBTOTAL (1)	
SUBTOTAL (2)	425.00
SUBTOTAL (3)	
TOTAL	($) 425.00

CORRESPONDENCE ADDRESS

Direct all correspondence to:
Patent Administrator
Testa, Hurwitz & Thibeault, LLP
High Street Tower-125 High Street
Boston, MA 02110
Tel. No.: (617) 248-7000
Fax No.: (617) 248-7100

SIGNATURE BLOCK

Respectfully submitted,

Date: October 18, 2002
Reg. No.: 33,497
Tel. No.: (617) 310-8108
Fax No.: (617) 248-7100

Steven J. Frank
Attorney for the Applicants
Testa, Hurwitz & Thibeault, LLP
High Street Tower-125 High Street
Boston, MA 02110

FRANKSJ\9308\4.2514376_1

Google Exhibit 1002
Google v. LS Cloud Storage Technologies
IPR2023-00777, Page 69 of 280

OIPE
OCT 1 8 2002
PATENT & TRADEMARK OFFICE

Express Mail Label No. EV093436042US

PETITION FOR EXTENSION OF TIME UNDER 37 CFR 1.136(a)	Attorney Docket Number NDI-001

In re Application of Ilya Gertner	
Application Serial No. 09/236,409	
Filed: January 22, 1999	
Group Art Unit: 2187	Examiner: Than Vinh Nguyen

OCT 2 5 2002
Technology Center 2100

This is a request under the provisions of 37 CFR 1.136(a) to extend the period for filing a response in the above entitled application.

The requested extension and appropriate non-small-entity fee are as follows (check time period desired)

☒	One month (37 CFR 1.17(a)(1))	$ 110.00
☐	Two months (37 CFR 1.17(a)(2))	$
☐	Three months (37 CFR 1.17(a)(3))	$
☐	Four months (37 CFR 1.17(a)(4))	$
☐	Five months (37 CFR 1.17(a)(5))	$

☒ Applicant claims small entity status under 37 CFR 1.27, therefore the fee amount shown above is reduced by one-half, and the resulting fee is: $55.00.

☒ A check in the amount of the fee is enclosed.

☐ The Commissioner is hereby authorized to charge the required fee to Deposit Account No. 20-0531. Enclosed is a duplicate of this sheet.

☒ The Commissioner is hereby authorized to charge any additional fees which may be required, or credit any overpayment, to Deposit Account No. 20-0531.

☒ Return receipt postcard enclosed.

I am the
- ☐ assignee of record of the entire interest.
- ☐ applicant.
- ☒ attorney or agent of record.
- ☐ attorney or agent under 37 CFR 1.34(a).

Registration number if acting under 37 CFR 1.34(a). _____.

CORRESPONDENCE ADDRESS	SIGNATURE BLOCK
Direct all correspondence to: Patent Administrator Testa, Hurwitz & Thibeault, LLP High Street Tower 125 High Street Boston, MA 02110 Tel. No.: (617) 248-7000 Fax No.: (617) 248-7100	Respectfully submitted, Date: October 18, 2002 Reg. No. 33,497 Tel. No.: (617) 310-8108 Fax No.: (617) 248-7100 Steven J. Frank Attorney for Applicant(s) Testa, Hurwitz & Thibeault, LLP High Street Tower 125 High Street Boston, MA 02110

FRANKSJ\9308\4.2514391_1

10/22/2002 SSESHE1 00000008 09236409

02 FC:2251 55.00 OP

UNITED STATES PATENT AND TRADEMARK OFFICE

UNITED STATES DEPARTMENT OF COMMERCE
United States Patent and Trademark Office
Address: COMMISSIONER OF PATENTS AND TRADEMARKS
Washington, D.C. 20231
www.uspto.gov

APPLICATION NO.	FILING DATE	FIRST NAMED INVENTOR	ATTORNEY DOCKET NO.	CONFIRMATION NO.
09/236,409	01/22/1999	ILYA GERTNER		1514

7590 09/27/2002

ILYA GERTNER
NETWORK DISK INC
5 GASLIGHT LANE
FRAMINGHAM, MA 01701

EXAMINER
NGUYEN, THAN VINH

ART UNIT	PAPER NUMBER
2187	16

DATE MAILED: 09/27/2002

Please find below and/or attached an Office communication concerning this application or proceeding.

1:54:20

PTO-90C (Rev. 07-01)

Advisory Action	Application No.	Applicant(s)
	09/236,409	GERTNER, ILYA
	Examiner	Art Unit
	Than Nguyen	2187

--The MAILING DATE of this communication appears on the cover sheet with the correspondence address --

THE REPLY FILED 19 September 2002 FAILS TO PLACE THIS APPLICATION IN CONDITION FOR ALLOWANCE. Therefore, further action by the applicant is required to avoid abandonment of this application. A proper reply to a final rejection under 37 CFR 1.113 may only be either: (1) a timely filed amendment which places the application in condition for allowance; (2) a timely filed Notice of Appeal (with appeal fee); or (3) a timely filed Request for Continued Examination (RCE) in compliance with 37 CFR 1.114.

PERIOD FOR REPLY [check either a) or b)]

a) ☒ The period for reply expires 3 months from the mailing date of the final rejection.

b) ☐ The period for reply expires on: (1) the mailing date of this Advisory Action, or (2) the date set forth in the final rejection, whichever is later. In no event, however, will the statutory period for reply expire later than SIX MONTHS from the mailing date of the final rejection. ONLY CHECK THIS BOX WHEN THE FIRST REPLY WAS FILED WITHIN TWO MONTHS OF THE FINAL REJECTION. See MPEP 706.07(f).

Extensions of time may be obtained under 37 CFR 1.136(a). The date on which the petition under 37 CFR 1.136(a) and the appropriate extension fee have been filed is the date for purposes of determining the period of extension and the corresponding amount of the fee. The appropriate extension fee under 37 CFR 1.17(a) is calculated from: (1) the expiration date of the shortened statutory period for reply originally set in the final Office action; or (2) as set forth in (b) above, if checked. Any reply received by the Office later than three months after the mailing date of the final rejection, even if timely filed, may reduce any earned patent term adjustment. See 37 CFR 1.704(b).

1.☐ A Notice of Appeal was filed on _____. Appellant's Brief must be filed within the period set forth in 37 CFR 1.192(a), or any extension thereof (37 CFR 1.191(d)), to avoid dismissal of the appeal.

2.☒ The proposed amendment(s) will not be entered because:

(a) ☒ they raise new issues that would require further consideration and/or search (see NOTE below);

(b) ☐ they raise the issue of new matter (see Note below);

(c) ☐ they are not deemed to place the application in better form for appeal by materially reducing or simplifying the issues for appeal; and/or

(d) ☐ they present additional claims without canceling a corresponding number of finally rejected claims.

NOTE: *See Continuation Sheet.*

3.☐ Applicant's reply has overcome the following rejection(s): _____.

4.☐ Newly proposed or amended claim(s) _____ would be allowable if submitted in a separate, timely filed amendment canceling the non-allowable claim(s).

5.☐ The a)☐ affidavit, b)☐ exhibit, or c)☐ request for reconsideration has been considered but does NOT place the application in condition for allowance because: _____.

6.☐ The affidavit or exhibit will NOT be considered because it is not directed SOLELY to issues which were newly raised by the Examiner in the final rejection.

7.☒ For purposes of Appeal, the proposed amendment(s) a)☒ will not be entered or b)☐ will be entered and an explanation of how the new or amended claims would be rejected is provided below or appended.

The status of the claim(s) is (or will be) as follows:

Claim(s) allowed: _____.

Claim(s) objected to: _____.

Claim(s) rejected: *1-4.*

Claim(s) withdrawn from consideration: _____.

8.☐ The proposed drawing correction filed on _____ is a)☐ approved or b)☐ disapproved by the Examiner.

9.☐ Note the attached Information Disclosure Statement(s)(PTO-1449) Paper No(s). _____.

10.☐ Other: _____

THAN NGUYEN
AU 2187 9/26/02

Google Exhibit 1002
Google v. LS Cloud Storage Technologies
IPR2023-00777, Page 72 of 280

Continuation of 2. NOTE: Applicant has added new limitations to the claims, which requires new considerations and search.

With regard to claim 3, although Olnowich discloses the use of a cache directory to maintain data coherence, as noted by the Examiner, the amended claim is not limited to mere use of a volume access table. Rather, the claim sets forth a procedure facilitating accessing remote disk access in a manner that avoids unnecessary network overhead. Olnowich is not concerned with this problem, and certainly does not disclose or suggest my solution as set forth in claim 3.

In light of the foregoing, I respectfully submit that all claims are now in condition for allowance.

Date: September 17, 2002

Respectfully Submitted,

Ilya Gertner
Applicant Pro Se
President of Network Disk, Inc.
5 Gaslight Lane
Framingham, MA 01702
Telephone: 603/884-5014, 508/872-4586
Facsimile: 508/872-2414

2492725

DocCode - SCORE

SCORE Placeholder Sheet for IFW Content

Application Number: 09236409 Document Date: 09/19/2002

The presence of this form in the IFW record indicates that the following document type was received in electronic format on the date identified above. This content is stored in the SCORE database.

Since this was an electronic submission, there is no physical artifact folder, no artifact folder is recorded in PALM, and no paper documents or physical media exist. The TIFF images in the IFW record were created from the original documents that are stored in SCORE.

- Drawing

At the time of document entry (noted above):

- USPTO employees may access SCORE content via DAV or via the SCORE web page.
- External customers may access SCORE content via PAIR using the Supplemental Content tab.

#15/D
CC
9/25/02
OK to enter
NV

PATENT

IN THE UNITED STATES PATENT AND TRADEMARK OFFICE

APPLICANT(S):	Ilya Gertner		
SERIAL NO.:	09/236,409	GROUP NO.:	2187
FILING DATE:	January 22, 1999	EXAMINER:	Than Nguyen
TITLE:	DATA STORAGE SYSTEM COMPRISING A NETWORK OF PCs AND METHOD OF USING SAME		

Received
SEP 1 9 2002
Technology Center 2100

Commissioner for Patents
Box AF
Washington, D.C. 20231

AMENDMENT AFTER FINAL OFFICE ACTION

Sir:

This amendment is submitted in response to the office action mailed on or about June 18, 2002.

In the Specification

Please amend the specification as indicated in the marked-up version that accompanies this paper. Due to the extensive nature of the amendments, a clean version of the entire specification is submitted herewith pursuant to 37 C.F.R. §1.125(b).

In the Claims

Please amend the claims as set forth in the accompanying clean and marked-up versions.

REMARKS

The specification has been reorganized as indicated and amended to correct minor errors.

In the final Office Action, the Examiner objected to the claims, citing various informalities; these are corrected in the within amendment. The Examiner also rejected claims 1-4 under 35 U.S.C. §112, second paragraph, for various enumerated reasons. These, too, are addressed in the amendment, and I submit that the claims now satisfy §112.

The Examiner indicated the allowability of claim 2, which I note with appreciation, and rejected claims 1 and 4 under 35 U.S.C. §102(e) as anticipated by Olnowich. For the reasons that follow, I respectfully submit that the claims, as amended, are allowable over Olnowich.

As explained on page 7 of the specification, a key feature of my invention as set forth in claim 1 the front-end/back-end separation, which separates disk operations from network traffic:

> The presence of fast access cache memory permits front end channels and network links to operate completely independent of the back-end physical disk devices. Because of this front-end/back-end separation, the data storage system 131 is liberated from the I/O channel and network timing dependencies. The data storage system is free to dedicate its processing resources to increase performance through more intelligent scheduling and data transfer network protocol.

Whether or not Olnowich discloses subject matter that loosely qualifies as a "front end" and a "back end," certainly he neither discloses nor suggests any features that divide responsibility in this fashion.

CLEAN COPY OF CLAIMS AS AMENDED

D'

1. (Twice Amended) A computer suitable for use in a data storage system comprising a network interconnecting a plurality of such computers, the computer comprising:

an I/O channel adapter for accepting an incoming I/O request from a host;

configuration manager software for enabling said I/O channel adapter to decide whether (i) to route said request to cache, (ii) to route said request to disk, or (iii) to reject said request;

a network adapter for handling network control traffic;

a cache memory;

front-end software for handling I/O requests arriving at the I/O channel adapter or the network adapter;

cache manager software, responsive to said front-end software, for handling data stored in said cache memory; and

back-end software, responsive to said configuration manager software, for handling reads and writes to disks corresponding to the I/O requests but without communication over the I/O channel adapter, thereby separating disk operations from network and I/O traffic.

5 ~~2~~. (Twice Amended) The system of claim 4 ~~13~~ ~~6~~, wherein the configuration manager includes software that checks an access mode in the volume access table and (i) if the access mode is set to an exclusive mode, causes both reads and writes to be stored in the cache memory, and causes invalidate messages to be sent to remote storage systems; (ii) if the access mode is set to shared,

D

19

causes only reads to be stored in the cache memory; and (iii) if the access mode is set to a value other than exclusive or shared, causes reads and writes to be performed directly to a disk without using the cache memory.

D cont

3. (Twice Amended) A method of accessing a remote disk over a computer network without incurring network overhead, the method comprising the steps of:

a. causing a local host to issue a request over an I/O channel to a local computer;

b. providing a configuration manager on the local computer, the configuration manager routing the request to a remote computer via the computer network;

c. causing the remote computer to check the request against a volume access table;

d. causing the remote computer to perform an I/O operation on a disk located on the remote computer and to return data to the local computer;

e. causing the local computer to provide the returned data to the local host via the I/O channel; and

f. causing the local computer to check the data against the volume access table to ensure consistency of the data on the local and the remote computers.

4. (Twice Amended) The system of claim 1 wherein the computers comprise off-the-shelf hardware and operating systems and further comprise:

an adapter I/O software for accepting incoming I/O requests from a host; and

20

D cont

a volume access table employed by the configuration manager to ensure consistency of data stored on the network.

D2

3 ~~12~~ ~~5~~. (New) The system of claim 1 wherein the cache memory comprises a portion of a distributed cache memory stored in the computers interconnected by the network

4 ~~13~~ ~~6~~. (New) The system of claim 3 ~~12~~ ~~5~~ further comprising a volume access table employed by the configuration manager to ensure consistency of data stored in the distributed cache.

21

D

MARKED-UP COPY OF AMENDED CLAIMS

1. ~~A~~ (Twice Amended) A computer suitable for use in a data storage system comprising ~~:~~ a network interconnecting a plurality of ~~PCs each of which includes~~ such computers, the computer comprising:

an I/O channel adapter for ~~transmitting data over the channel and~~ accepting an incoming I/O request from a host;

configuration manager software for enabling said I/O channel adapter to decide whether (i) to route said request to cache, (ii) to route said request to disk, or (iii) to reject said request;

a network adapter for ~~transmitting~~ handling network control ~~signals and data over the network~~ traffic;

a cache memory;

front-end software for handling I/O requests arriving ~~to~~ at the I/O channel adapter ~~and~~ or the network adapter;

cache manager software, responsive to said front-end software, for handling data stored in ~~cash memory of the PC, said cache memory comprises a portion of a distributed cache memory stored in the plurality of PCs interconnected by the network;~~ said cache memory; and

~~back-end software for handling reads and writes to disks;~~ back-end software, responsive to said configuration manager software, for handling reads and writes to disks corresponding to the I/O requests but without communication over the I/O channel adapter, thereby separating disk operations from network and I/O traffic.

~~a configuration manager software module for managing resources in the cache manager to ensure consistency of data stored in the distributed cache; and~~

~~a volume access table used by the cache manager to improve performance of said data storage system.~~

2. (Twice Amended) The system of claim 6, wherein the configuration manager includes software that checks an access mode in the volume access table and (i) if the access mode is set to an exclusive mode, causes both reads and writes to be stored in the cache memory, and causes invalidate messages to be sent to remote storage systems; (ii) ~~1, wherein the configuration manager includes software that checks access mode in volume access table:~~

~~if an access mode is set to exclusive mode, and if so data storage subsystems caches both reads and writes and the data storage system sends invalidate messages to remote storage systems; and~~

~~shared, the storage system caches only reads; and~~

if the access mode is set to ~~a value other than the~~ shared, causes only reads to be stored in the cache memory; and (iii) if the access mode is set to a value other than exclusive or shared, ~~the configuration manager starts~~ causes reads and writes to be performed directly to a disk without using the cache memory.

3. ~~The system of claim 1 wherein a host accesses~~(Twice Amended) A method of accessing a remote disk over a computer network without incurring network overhead, the method comprising the steps of:

~~Step 1:~~ a. causing a local host ~~issues~~ to issue a request over an I/O channel to a local ~~PC; and~~ computer;

~~Step 2:~~ b. providing a configuration manager on ~~said local PC routes said~~ the local computer, the configuration manager routing the request to a remote ~~PC~~

~~via network; and~~

~~Step 3: remote PC checks volume access table to improve performance; and~~

~~Step 4: remote PC starts I/O operation on remote disk and returns data to said local PC; and~~

~~Step 5: said local PC returns data to said local hosts via said I/O channel; and~~

~~Step 6: said local PC checks~~ computer via the computer network;

c. causing the remote computer to check the request against a volume access table;

d. causing the remote computer to perform an I/O operation on a disk located on the remote computer and to return data to the local computer;

e. causing the local computer to provide the returned data to the local host via the I/O channel; and

f. causing the local computer to check the data against the volume access table to ~~improve performance; and~~ ensure consistency of the data on the local and the remote computers.

~~Step 7: configuration manager maintains consistency of data stored in local PC and remote PCs.~~

~~4.~~ 4. (Twice Amended) The system of claim 1~~,~~ wherein ~~PCs are using~~ the computers comprise off-the-shelf hardware and operating ~~system, and new software components including~~ systems and further comprise:

an adapter I/O software ~~modified to accept~~ for accepting incoming I/O requests from a host; and

a volume access table ~~used~~ employed by the configuration manager to ~~improve performance of cache management in said data storage system~~ ensure consistency of data stored on the network.

5. (New) The system of claim 1 wherein the cache memory comprises a portion of a distributed cache memory stored in the computers interconnected by the network

6. (New) The system of claim 5 further comprising a volume access table employed by the configuration manager to ensure consistency of data stored in the distributed cache.

SUBSTITUTE SPECIFICATION
09/236409

A Data Storage System Comprising a Network of PCs and Method Using Same

Background of the Invention

1. Field of the Invention

This invention relates generally to the field of cached data storage systems and more particularly to a data storage system that permits independent access from local hosts connected via I/O channels and independent access from remote hosts and remote storage systems connected via network links. A network of PCs permits building a high-performance, scalable, data storage system using off-the-shelf components at reduced cost. A configuration manager ensures consistency of data stored in the distributed cache.

2. Description of Related Art

A typical data processing system generally involves a cached data storage system that connects to local host computers via I/O channels or remote host computers via network links. The purpose of the data storage system is to improve the performance of applications running on the host computer by offloading I/O processing from the host to the data storage system. The purpose of the cache memory in a data storage system is to further improve the performance of the applications by temporarily storing data buffers in the cache so that the references to those buffers can be resolved efficiently as "cache hits". Reading data from a cache is an order of magnitude faster than reading data from a back end storage device such as a disk. Writing data to a cache is also an order of magnitude faster than writing to a disk. All writes are cache hits because data is simply copied into cache buffers that are later flushed to disks.

Prior art data storage systems are implemented using proprietary hardware and very low-level software, frequently referred to as microcode, resulting in expensive and not portable systems. In contrast to the prior art systems, the preferred embodiment of the

Google Exhibit 1002
Google v. LS Cloud Storage Technologies
IPR2023-00777, Page 85 of 280

present invention uses standard hardware and software components. A network of commercial PCs is used to implement a high-performance data storage system. A method using the network of PCs includes an algorithm for a configuration manager that manages access to the distributed cache memory stored in PCs interconnected by the network.

Numerous prior art systems and methods exist for managing cache memory in a data storage system. The prior art has suggested several methods for managing cache for channel attached hosts. U.S.Pat. No, 5,717,884, Gzym, et. al., Feb 2, 1996, Method and Apparatus for Cache Management, discloses data structures and algorithms that use a plurality of slots, each of which is used to store data files. U.S. Pat. No, 5,757,473, Vishlitzky, et. al., Cache Management system using time stamping for replacement queue, Jul 28, 1998, discloses a method that uses time stamps to manage queues in a cached data storage system. U.S.Pat. No, 5,751,993, Ofek, et. al., May 12, 1998, Cache Management Systems, discloses yet another aspect in queue management algorithms. U.S. Pat. No, 5,600,817, Macon Jr., et. al., Feb. 4, 1997, Asynchronous read-ahead disk caching using multiple disk I/O processes and dynamically variable prefetch length, discloses read-ahead methods in cached storage systems. U.S. Pat. No, 5,758,050, Brady, et. al., May 26, 1998, Reconfigurable data storage system, discloses a method for reconfiguring a data storage system.

However, the above systems use very specialized embedded operating systems and custom programming in a very low-level programming language such as assembler. The obvious drawback of the above systems is high cost because assembler-level programming is very time consuming. Another drawback is inflexibility and lack of functionality. For example, some features such as reconfigurability in data storage are very limited in proprietary embedded systems when compared to general purpose operating systems. Finally, networking support is very expensive and limited because it relies on dedicated communication links such as T1, T3 and ESCON.

Google Exhibit 1002
Google v. LS Cloud Storage Technologies
IPR2023-00777, Page 86 of 280

One prior art system using networking of data storage systems is disclosed in U.S. Pat. No, 5,742,792, Yanai, et. al., April 21, 1998, Remote Data Mirroring. This patent discloses a primary data storage system providing storage services to a primary host and a secondary data storage system providing services to a secondary host. The primary storage system sends all writes to the secondary storage system via IBM ESCON, or optionally via T1 or T3 communications link. The secondary data storage system provides a backup copy of the primary storage system. Another prior art system is disclosed in U.S. Pat. No, 5,852,715, Raz , et al., December 22, 1998, System for currently updating database by one host and reading the database by different host for the purpose of implementing decision support functions.

However, the above systems use dedicated communication links that are very expensive when compared to modern networking technology. Furthermore, the data management model is limited to the primary-node sending messages to the secondary node scenario. This model does not support arbitrary read and write requests in a distributed data storage system.

There is a growing demand for distributed data storage systems. In response to this demand some prior art systems have evolved into complex assemblies of two systems, one proprietary a data storage system and the other an open networking server. One such system is described in a white paper on a company web site on Internet. The industry white paper, EMC Data Manager: A high-performance, centralized open system backup/restore solution for LAN-based and Symmetrix resident data, describes two different systems, one for network attached hosts and second for channel attached hosts. The two systems are needed because of the lack of generic networking support. In related products such as Celerra File Server, product data sheets suggest using data movers for copying data between LAN-based open system storage and channel attached storage system.

4

Google Exhibit 1002
Google v. LS Cloud Storage Technologies
IPR2023-00777, Page 87 of 280

However, the above systems are built from two systems, one for handling I/O channels, and another for handling open networks. Two systems are very expensive even in minimal configuration that must include two systems.

In another branch of storage industry, network attached storage systems use network links to attach to host computers. Various methods for managing cache memory and distributed applications for network attached hosts have been described in prior art. U.S. Pat. 5,819,292, Hitz, et. al., Method for maintaining consistent states of a file system and for creating user-accessible read-only copies of a file system, Oct 6, 1998, U.S. Pat. No, 5,644,751, and Burnett, et. al., July 1, 1997, Distributed file system (DFS) cache management system based on file access characteristics, discloses methods for implementing distributed file systems. U.S. Pat. No, 5,649,105, Aldred, et. al., July 15, 1997, Collaborative working in a network, discloses programming methods for distributed applications using file sharing. U.S. Pat. No, 5,701,516, Chen, et. al., Dec 23. 1997, High-performance non-volatile RAM protected write cache accelerator system employing DMA and data transferring scheme, discloses optimization methods for network attached hosts. However, those systems support only network file systems. Those systems do not support I/O channels.

In another application of storage systems, U.S. Pat. No, 5,790,795, Hough, August 4, 1998, Media server system which employs a SCSI bus and which utilizes SCSI logical units to differentiate between transfer modes, discloses a media server that supports different file systems on different SCSI channels. However the system above is limited to a video data and does not support network attached hosts. Furthermore, in storage industry papers, Data Sharing, by Neema, Storage Management Solutions, Vol. 3, No. 3, May, 1998, and another industry paper, Storage management in UNIX environments: challenges and solutions, by Jerry Hoetger, Storage Management Solutions, Vol. 3, No. 4, survey a number of approaches in commercial storage systems and data sharing. However, existing storage systems are limited when applied to support multiple platform systems.

Google Exhibit 1002
Google v. LS Cloud Storage Technologies
IPR2023-00777, Page 88 of 280

Therefore, a need exists to provide a high-performance data storage system that is assembled out of standard modules, using off-the-shelf hardware components and a standard general-purpose operating system that supports standard network software and protocols. In addition, the needs exists to provide a cached data storage system that permits independent data accesses from I/O channel attached local hosts, network attached remote hosts, and network-attached remote data storage systems.

Summary of the Invention

The primary object of the invention is to provide a high performance, scalable, data storage system using off-the-shelf standard components. The preferred embodiment of the present invention comprises a network of PCs including an I/O channel adapter and network adapter and method for managing distributed cache memory stored in the plurality of PCs interconnected by the network. The use of standard PCs reduces the cost of the data storage system. The use of the network of PCs permits building large, high-performance, data storage systems.

Another object of the invention is to provide a distributed cache that supports arbitrary reads and writes arriving via I/O channels or network links, as well as a method for sharing data between two or more heterogeneous host computers using different data formats and connected to a data storage system. The method includes a translation module that inputs a record in a format compatible with the first host and stores the translated record in a data format compatible with the second host. Sharing of data in one format and having a translation module permitting representations in different formats in cache memory provides a means for improving performance of I/O requests and saving disk storage space.

Google Exhibit 1002
Google v. LS Cloud Storage Technologies
IPR2023-00777, Page 89 of 280

In accordance with a preferred embodiment of the invention, a data storage system comprises a network of PCs each of which includes a cache memory, an I/O channel adapter for transmitting data over the channel and a network adapter for transmitting data and control signals over the network. In one embodiment, a method for managing resources in a cache memory ensures consistency of data stored in the distributed cache. In another embodiment, a method for sharing data between two or more heterogeneous hosts includes the steps of: reading a record in a format compatible with one computer; identifying a translation module associated with the second computer; translating the record into the format compatible with the second computer and writing said translated record into a cache memory.

The preferred embodiment of the present invention involves a method for building a data storage system that provides superior functionality at lower cost when compared to prior art systems. The superior functionality is achieved by using an underlying general-purpose operating system to provide utilities for managing storage devices, backing data, troubleshooting storage devices and performance monitoring. The lower cost is achieved by relying on standard components. Furthermore, the preferred embodiment of the present invention overcomes the limitations of prior art systems by providing concurrent access for both I/O channel attached hosts and network link attached hosts.

The preferred embodiment of this invention uses SCSI channels to connect to local hosts and uses standard network links card such as Ethernet, or ATM to connect to remote hosts. The alternate embodiment of the present invention uses fiber channel link such as Fibre Channel as defined by the Fibre Channel Association, FCA, 2570 West El Camino Real, Ste. 304, Mountain View, CA 94040-1313 or SSA as defined SSA Industry Association, DEPT H65/B-013 5600 Cottle Road, San Jose, CA 95193. Prior art systems such as U.S. Pat. No, 5,841,997, Bleiwess, et. al., November 24, 1998, Apparatus for effecting port switching of fibre channel loops, and U.S. Pat. No, 5,828,475, Bennett, et. al., October 27, 1998, Bypass switching and messaging mechanism for providing intermix fiber optic switch using a bypass bus and buffer, disclosure methods that connects disks

Google Exhibit 1002
Google v. LS Cloud Storage Technologies
IPR2023-00777, Page 90 of 280

and controllers. However, the problems remain in software, solution of which require methods described in the preferred embodiment of the present invention.

The drawings constitute a part of this specification and include exemplary embodiments to the invention, which may be embodied in various forms.

Brief Description of the Drawings

FIG. 1 shows data storage systems configurations;

FIG. 2 illustrates in block diagram form the alternate embodiment of the data storage system of the present invention;

FIG. 2A illustrates in block diagram form the alternate embodiment of the data storage system of the present invention;

FIG. 2B illustrates in block diagram form another variation of the alternate embodiment of the present invention;

FIG. 3 shows a PC data storage system;

FIG. 4 illustrates in data flow diagram form the operations of a data storage system including: FIG. 4A illustrating operations in write exclusive mode, FIG 4B in read exclusive mode, FIG 4C in write shared mode, FIG 4D in read shared mode, FIG 4E in disk interrupt, FIG 4F in page flusher; and

FIG. 5 illustrates in block diagram form data sharing operations.

Detailed Description of the Preferred Embodiments

Detailed descriptions of the preferred embodiment are provided herein. It is to be understood, however, that the present invention may be embodied in various forms. Therefore, specific details disclosed herein are not to be interpreted as limiting.

Google Exhibit 1002
Google v. LS Cloud Storage Technologies
IPR2023-00777, Page 91 of 280

FIG. 1 illustrates data storage system configurations of the preferred embodiment. The PC data storage system 131 services a plurality of channel attached host processors 111, 112 using channels 121, 122, and a plurality of network attached host processors 106, 107 using network link 151, and a plurality of network attached data storage systems 132, 133 using network links 152, 153. PC storage system 132 services channel attached hosts 157, 158.

Hosts 157 and 158 access a data storage system 131 indirectly via network attached data storage system 132, thereby offloading communications protocol overhead from remote hosts 157, 158. Hosts 106 and 107 directly access storage system 131 via network link 151 thereby incurring communications protocol overhead on hosts 106, 107 and therefore decreasing performance of applications running on said hosts.

Host 111 accesses remote disk 181 via local data storage system 131, network link 153, and remote data storage system 133 without incurring protocol overhead on host 111. Host 157 accesses disk 161 via data storage system 133, network link 152, and data storage system 131 without incurring protocol overhead on host 157. Host 106 directly accesses local disk 161 via network link 151 thereby incurring protocol overhead. The disks 191, 192 that are attached to hosts 106, 107 without a data storage system, cannot be accessed by outside hosts.

The preferred embodiment of the present inventions uses well-established technologies such as SCSI channels for I/O traffic and Ethernet link for network traffic. In FIG 2, the alternate embodiment of the present invention uses fiber channel technology for both I/O traffic and network traffic. The fiber channel connects computers and hard disks into one logical network. In one variation of the alternate embodiment in FIG. 2, the fiber optics link is organized as a Fiber Channel Arbitrated Loop (FCAL). In another variation shown in FIG. 2A, the fiber optics link is organized as a switching network. In yet another variation in FIG. 2B, the fiber channel is organized in two FCAL loops connected via switch.

Google Exhibit 1002
Google v. LS Cloud Storage Technologies
IPR2023-00777, Page 92 of 280

FIG. 3 shows a software architecture and modules of a PC data storage system corresponding to the data storage system 131 in FIG 1. Data is received from the hosts 111, 112 via I/O channels 121, 122 in front-end software module 310 in FIG. 3. The front-end module 310 handles channel commands and places the results in cache memory 322 in the form of new data or modification to data already stored on the disk 161. The cache manager software module 320 calls routines in the configuration manager 340 to ensure consistency of the cache memory in other network attached data storage systems. At some later point in time, the back-end software module 342 invokes a page flusher module to write modified data to disks 161 and 162 and free up cache memory.

In FIG 3, front-end module 310 including I/O adapter driver has been modified to accept target SCSI I/O requests from hosts 111 and 112. Said front-end module handles I/O requests in such a manner that hosts 111 and 112 are not aware of a data storage system. Hosts 111 and 112 issue I/O requests as if the request is going to a standard disk.

The presence of fast access cache memory permits front end channels and network links to operate completely independent of the back-end physical disk devices. Because of this front-end/back-end separation, the data storage system 131 is liberated from the I/O channel and network timing dependencies. The data storage system is free to dedicate its processing resources to increase performance through more intelligent scheduling and data transfer network protocol.

FIG. 4 shows a flowchart of a data storage system in the process of reading or writing to data volumes stored on disk drives shown in FIG. 3. The flowchart uses a volume access table 450 (see also FIG. 5) and controlled by the configuration manager. Local operations begin in step 401 where the corresponding front-end module 310 of FIG. 3 allocates a channel and waits for I/O requests from the initiating hosts 111 or 112. Remote operations begin in step 402. Depending upon the status of the value in a volume access table 450 the requests are routed either as shown in FIG. 4A for write exclusive

Google Exhibit 1002
Google v. LS Cloud Storage Technologies
IPR2023-00777, Page 93 of 280

cache manager branches directly to step 413 where data is copied into the newly allocated buffer. In step 414, the cache manager calls a configuration manager routine that sends an invalidate request to the list of shared hosts for this particular volume. In step 415, the cache manager checks the type of a request. For a channel type of a request, the cache manager returns to step 405 to release the channel. For a network type of a request, the cache manager proceeds to release network request in step 419 on the right side of FIG. 4A.

On the right side of FIG. 4A, in step 416, network interrupt identifies and receives a remote write request. In step 417, the cache manager calls configuration manager routine to determine the validity of the request. Bad requests are ignored in step 418. Correct requests proceed to step for 410 for write exclusive processing. Step 415 returns the flow to step 419, which releases network resources.

FIG. 4B shows a flowchart of the cache manager as it processes a read request in an exclusive mode. In step 420, the cache manager checks whether the requested buffer is in cache or not. For a cache miss, in step 421, the cache manager allocates a buffer for storing data that will be read in. In step 422, the cache manager updates the buffer status with read pending. In step 423, the cache manager starts an operation to read from a hard disk driver and proceeds to release the channel in step 405. For a cache hit, in step 424, the cache manager transmits read data and proceeds to release the channel in step 405. For an identified network request, in step 425, the cache manager sends back read results in step 429.

On the right side of FIG. 4B, in step 426, network interrupt identifies and receives a remote read request. In step 427, the cache manager calls a configuration manager routine that checks the configuration file and ignores bad requests in step 428. Correct requests proceed to step 420 for read exclusive processing. Step 425 returns the flow to step 429 that sends read results.

Google Exhibit 1002
Google v. LS Cloud Storage Technologies
IPR2023-00777, Page 94 of 280

FIG. 4C shows a flowchart of the cache manager as it processes a write request in a shared mode. In step 430, the cache manager checks whether the requested buffer is in cache or not. For a cache miss, in step 431, the cache manager allocates a new buffer for storing data that will be written. For a cache hit, the cache manager branches directly to step 432 where data is copied into the newly allocated buffer. In step 433, the cache manager updates the buffer status with write pending and proceeds to step 434 to release the channel. In step 435, the cache manager calls a configuration manager routine that sends a remote write request to the host that holds this particular volume in an exclusive mode. In follow up to step 435, the cache manager returns to the beginning of FIG. 4.

On the right side of FIG. 4C, the cache manager updates the buffer status with write done in step 444. The flow begins with the network interrupt that calls configuration manager to validate the request in step 441. Bad requests are ignored in step 442. A correct request proceeds to step 443 that checks whether the status of this particular buffer is write pending. If the status is pending, in step 444, the cache manager updates the buffer status to write done. For any other buffer status, in step 445, the cache manager updates the status to free. This buffer is released in accordance with the invalidate request that has come from a remote host that holds this volume in an exclusive mode as has been described in FIG. 4A.

FIG. 4D shows a flowchart of the cache manager as it processes a read request in a shared mode. In step 450, the cache manager checks whether the requested buffer is in cache or not. For a cache miss, in step 452, the cache manager allocates a buffer for storing data that will be read into. For a cache hit, in step 451, the cache manager transmits read data and proceeds to step 405 to release the channel. In the case of the cache miss, the cache manager allocates a new buffer in step 452 and updates its status to read pending in step 453. In step 454, the cache manager closes the channel with an optimizer that maintains a pool of open channels which are kept open only for the specified amount of time. In step 455, the cache manager calls configuration manager routine that sends a remote read request to the host that holds this particular volume in an

Google Exhibit 1002
Google v. LS Cloud Storage Technologies
IPR2023-00777, Page 95 of 280

exclusive mode. The operations of the host holding volume in read exclusive mode have been shown in FIG. 4B.

On the right side of FIG. 4D, in step 456, a network interrupt identifies a remote read result. In step 457, the cache manager performs an optimized channel open. Depending upon the status of the optimizer that has been initiated in step 454, the cache manager may immediately get access to the still open channel or, if the optimizer fails, the cache manager may need to reopen the channel. In step 458, the cache manager transmits read data. In step 459, the cache manager updates the buffer status to read done and proceeds to step 459 where it releases the channel.

FIG. 4E shows a flowchart of the cache manager as it processes a hard disk interrupt request marking the completion of a read or write request. The read request has been started in step 423 in FIG 4B. The write request has been started in step 475 in FIG 4F. In step 460, the cache manager checks the type of the hardware interrupt. For a write interrupt in step 461, the cache manager updates the buffer status to write done and releases resources associated with the interrupt. For a read interrupt in step 462, the cache manager updates the buffer status to read done. In step 463, the cache manager checks request type of the read operation that has been started in FIG 4B. For a channel request, the cache manager proceeds to open a channel in step 466. In step 467, the cache manager transmits read data and proceeds to release the channel in step 405. For a network request in step 464, the cache manager finds the remote read requests that initiated the request. In step 466, the cache manager sends read results and ends interrupt processing.

FIG. 4F shows a flowchart of a cache memory page flusher. The flusher is a separate daemon running as part of the cache manager. In step 471, the flusher waits for the specified amount of time. After the delay in step 472, the flusher begins to scan pages in cached memory. In step 473, the flusher checks the page status. If the page list has been exhausted in branch no more pages, the flusher returns to step 471 where it waits. If the

Google Exhibit 1002
Google v. LS Cloud Storage Technologies
IPR2023-00777, Page 96 of 280

page status is other than the write pending, the flusher returns to step 472 to continue scanning for more pages. If the page status is write pending, the flusher proceeds to step 474. In step 474, the flusher checks the request type. For a channel type, the flusher starts a read operation in step 475 and returns to scan pages in step 472. For a network type, the flusher checks for the network operations in progress and returns to step 472 for more pages.

FIG. 5 shows a data sharing operation between a plurality of heterogeneous host computers. In one embodiment the plurality of hosts includes but is not limited to a Sun Solaris workstation 111, Windows NT server 112, HP UNIX 106, and Digital UNIX 107 each accessing a distinct virtual device respectively 510, 520, 530 and 540. Configuration manager 560 provides concurrency control for accessing virtual devices that are mapped to the same physical device 161. The configuration manager uses a volume access table 450 that has been shown in FIG. 4.

A virtual device is a method that comprises three operations: initialization, read and write. The initialization operation registers a virtual device in an operating system on a heterogeneous host. Following the registration, the virtual device appears as if it is another physical device that can be brought on-line, offline or mounted a file system. An application program running on the host cannot distinguish between a virtual device and a physical device.

For a virtual device, the read operation begins with a read from a physical device followed by a call to a translation module. The translation module inputs a shared record in a original format used on a physical disk and outputs the record in a new format that is specified for and is compatible with a host computer. The write operation begins with a call to a translation module that inputs a record in a new format and outputs a record in a shared format. The translation module is a dynamically loadable library that can be changed, compiled and linked at run-time.

Google Exhibit 1002
Google v. LS Cloud Storage Technologies
IPR2023-00777, Page 97 of 280

The virtual device method described above allows a plurality of heterogeneous host computers to share one copy of data stored on a physical disk. In a data storage system using said virtual device method, a plurality of virtual devices is maintained in cache without requiring a copy of data on a physical disk.

While the invention has been described in connection with a preferred embodiment, it is not intended to limit the scope of the invention to the particular form set forth.

Google Exhibit 1002
Google v. LS Cloud Storage Technologies
IPR2023-00777, Page 98 of 280

09/236408

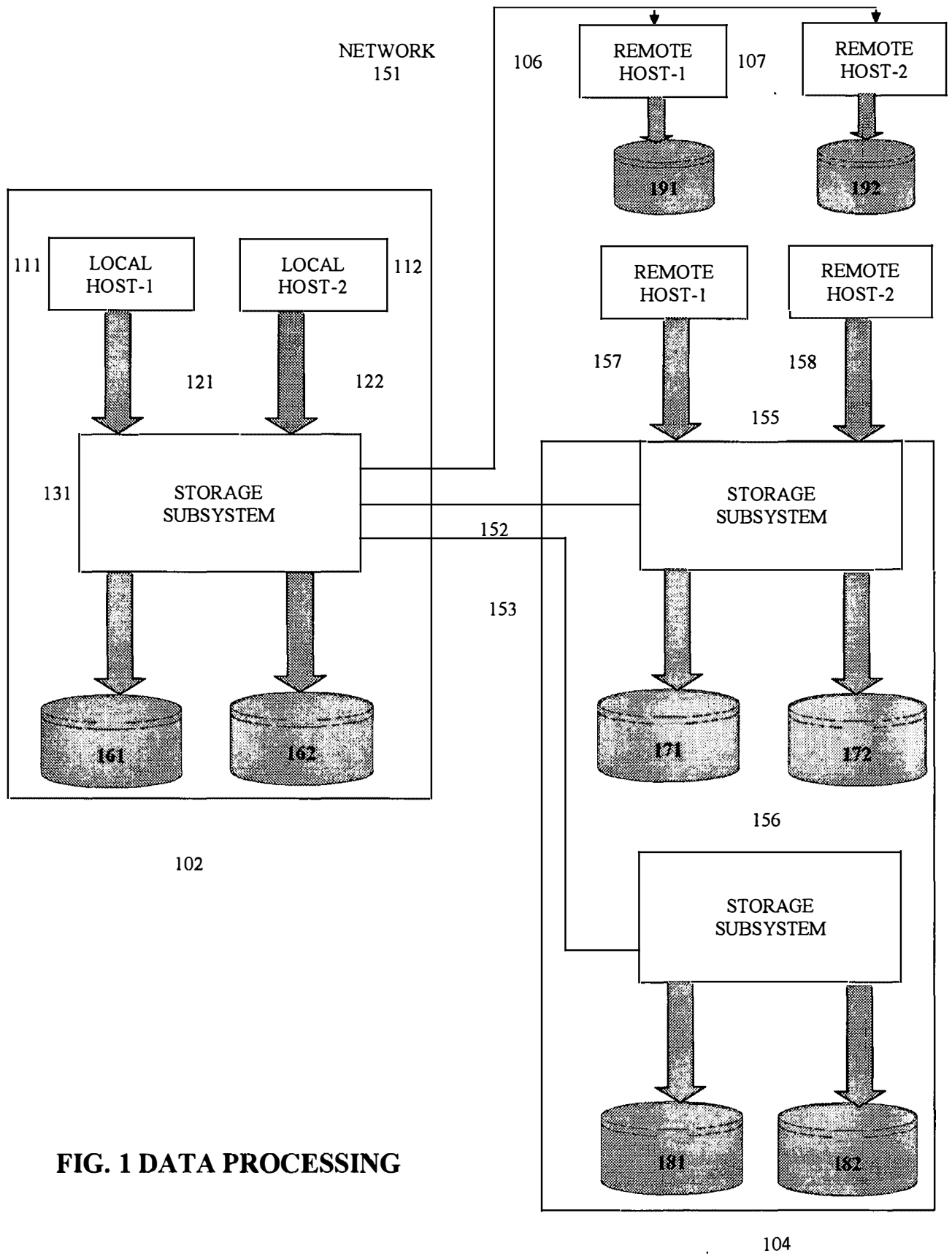

FIG. 1 DATA PROCESSING

09/236409

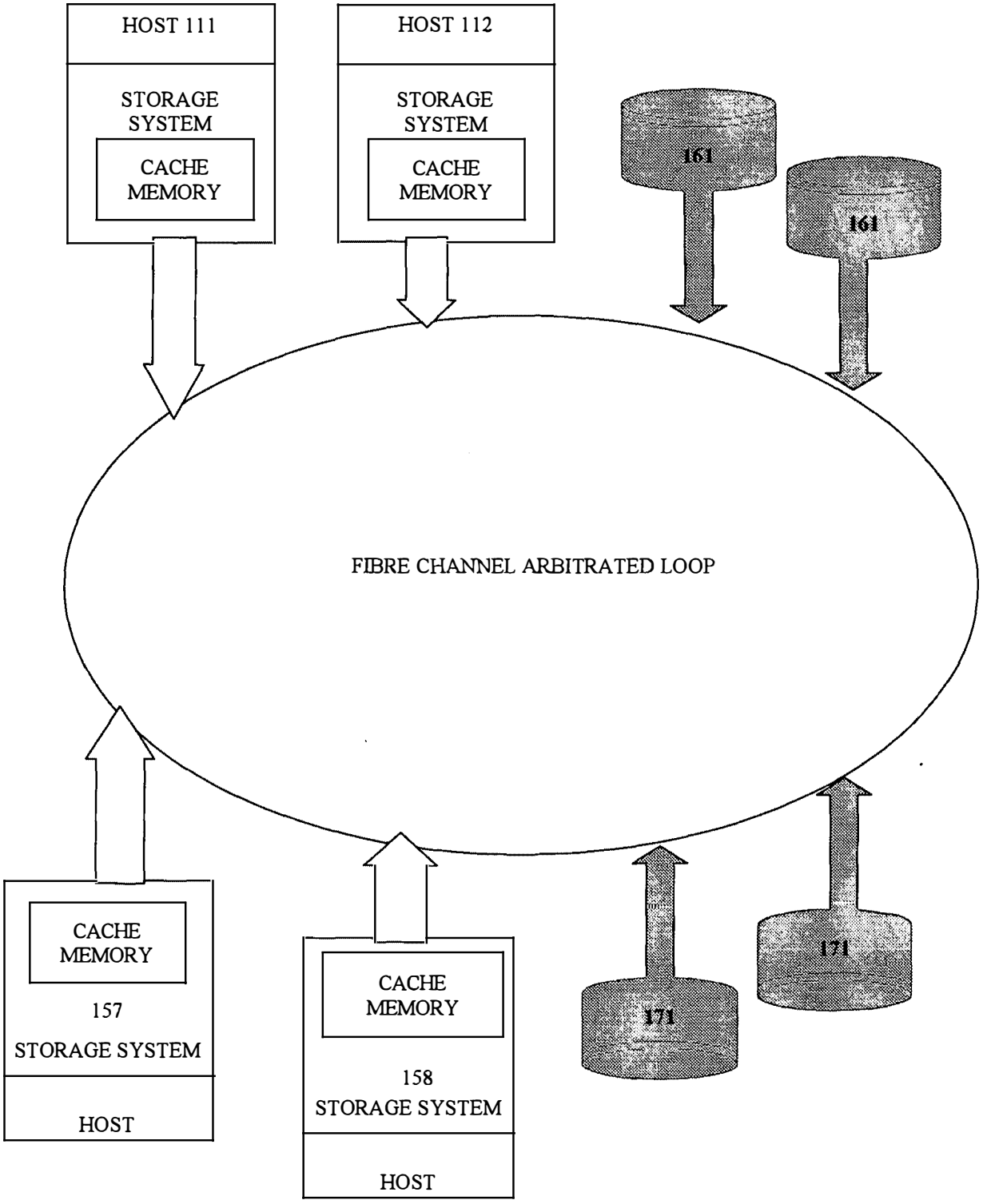

FIG. 2 FIBRE CHANNEL ARBITRATED LOOP FOR (FCAL)

09/236409

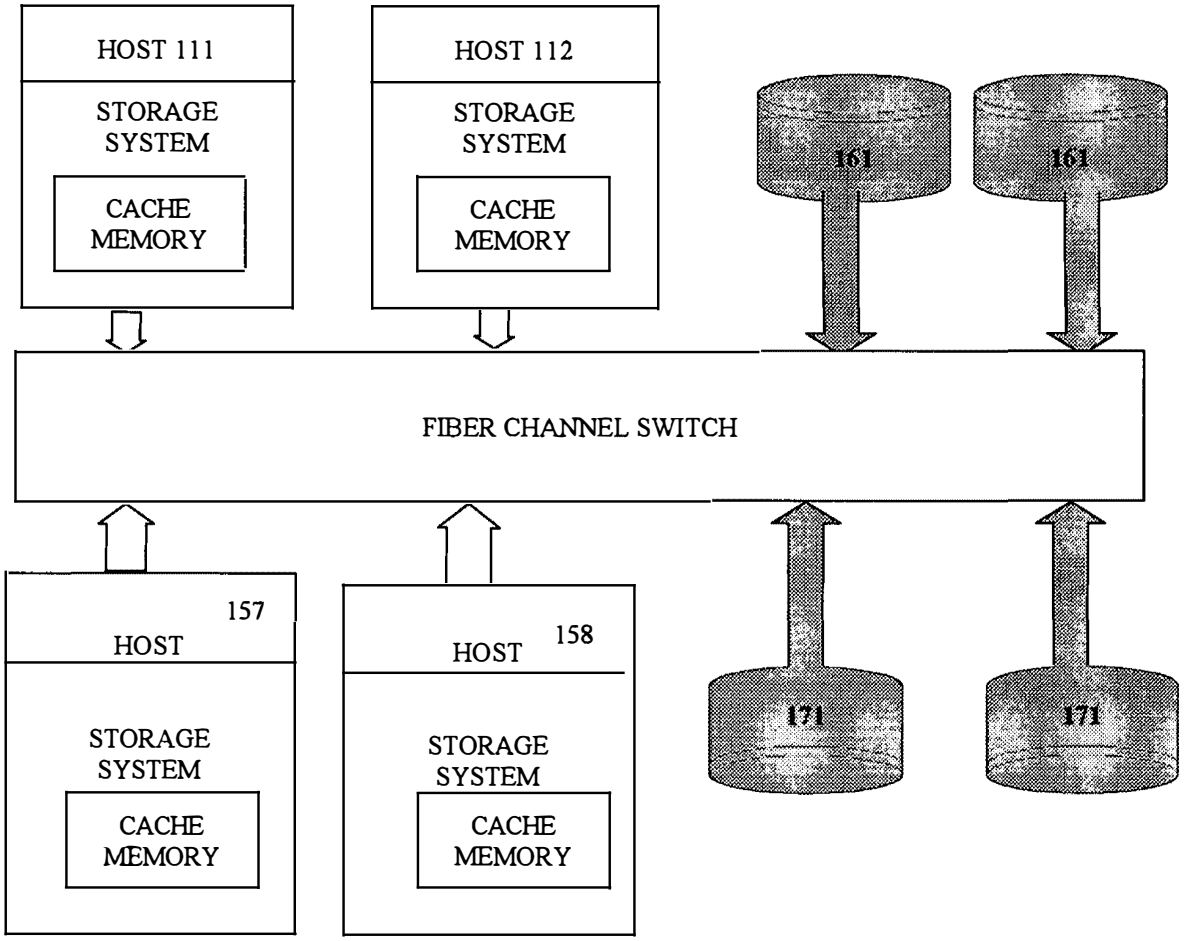

FIG. 2A FIBER CHANNEL SWITCH

08/236409

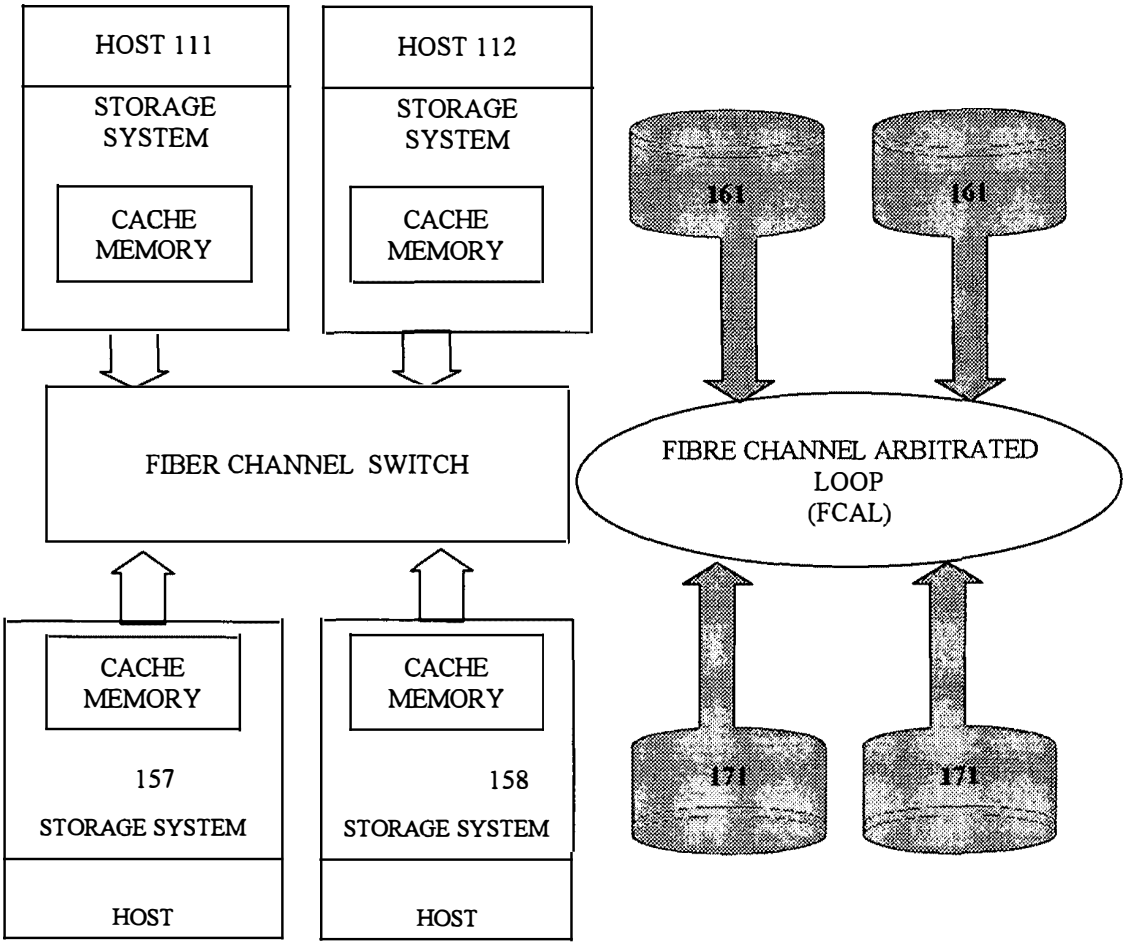

FIG. 2B FIBER CHANNEL SWITCH FOR HOST COMPUTERS AND FIBRE CHANNEL ARBITRATED LOOP FOR STORAGE

09/236409

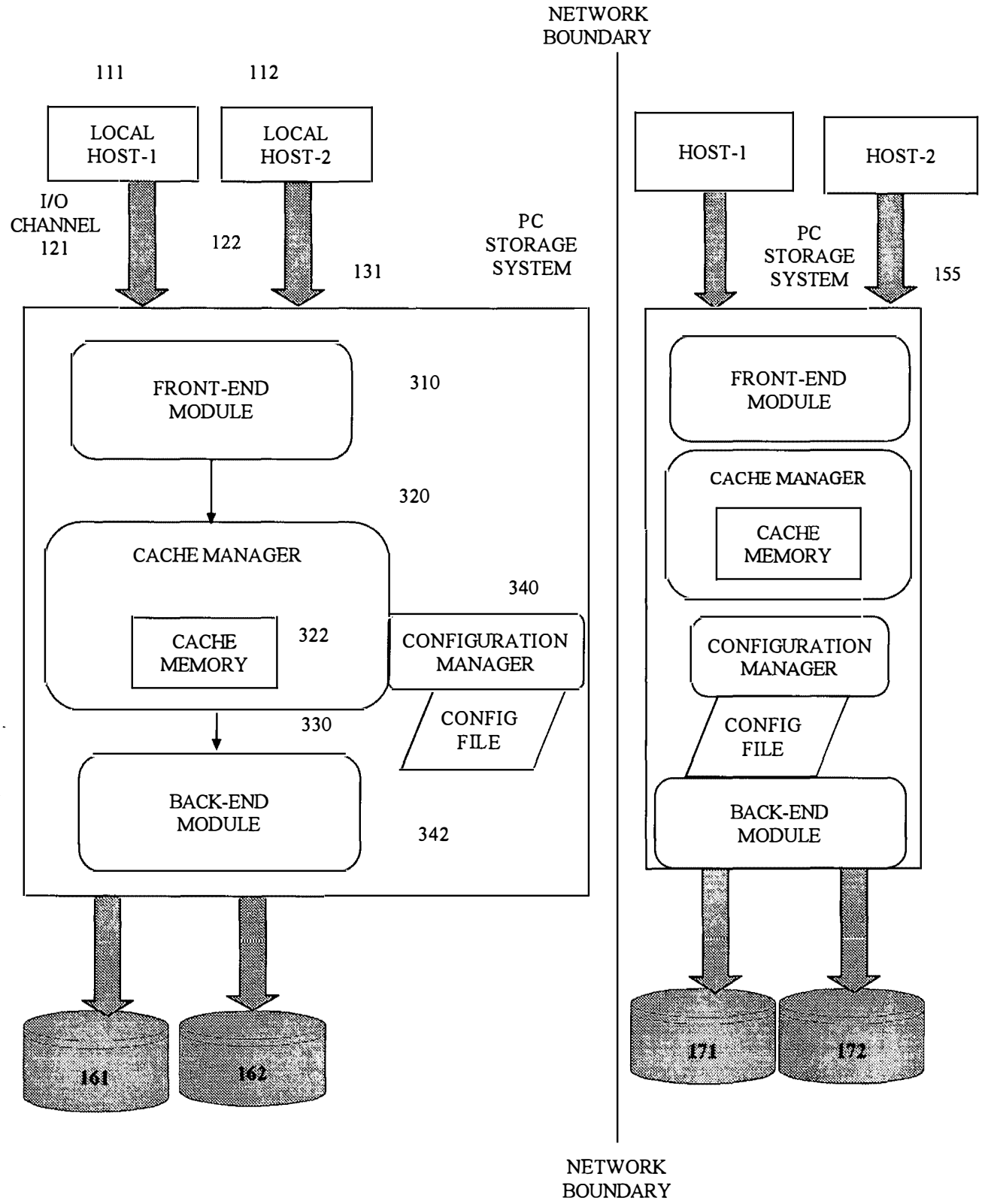

FIG. 3 DATA STORAGE SYSTEM

09/236409

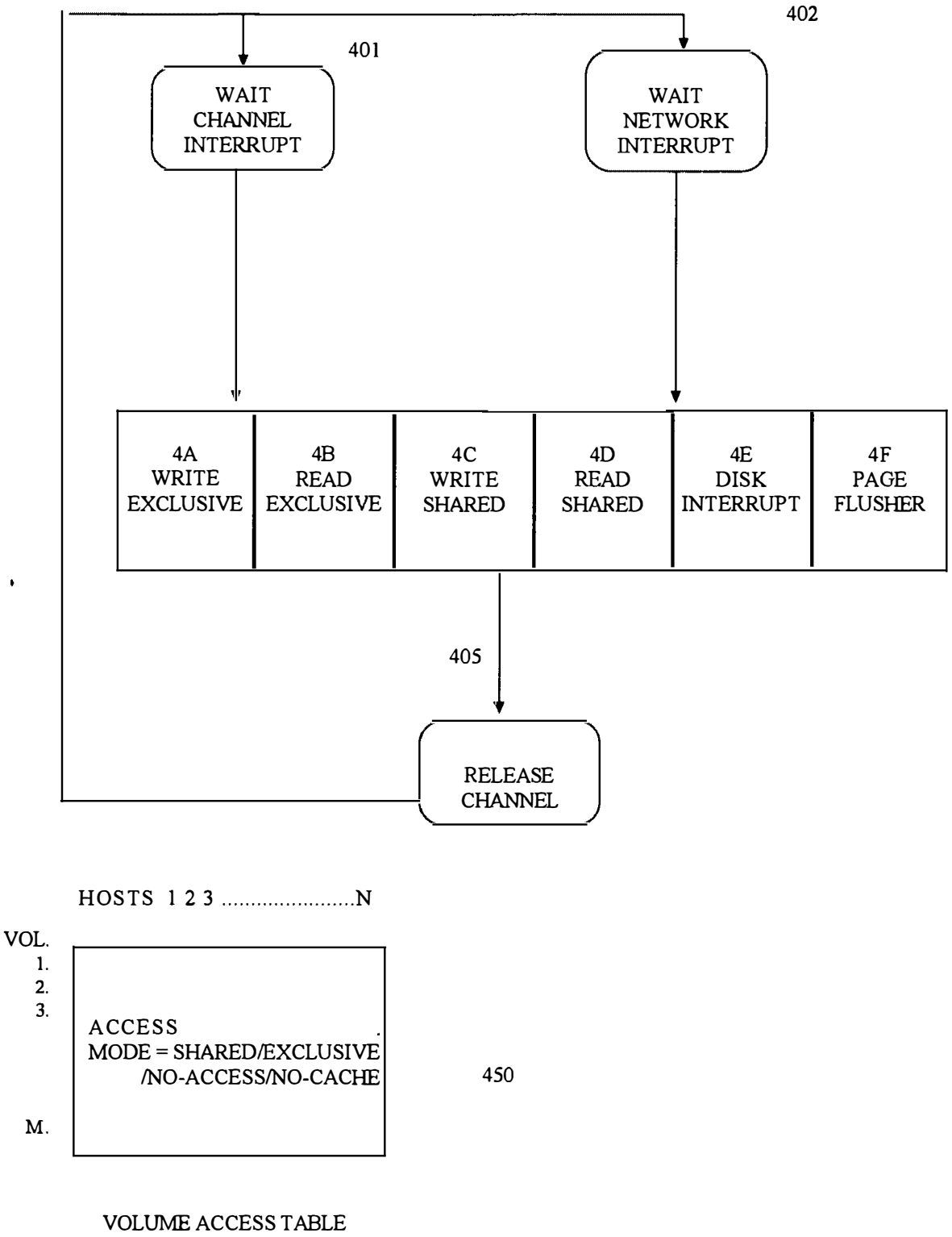

FIG. 4 READ/WRITE FLOWCHART OVERVIEW

08/236409

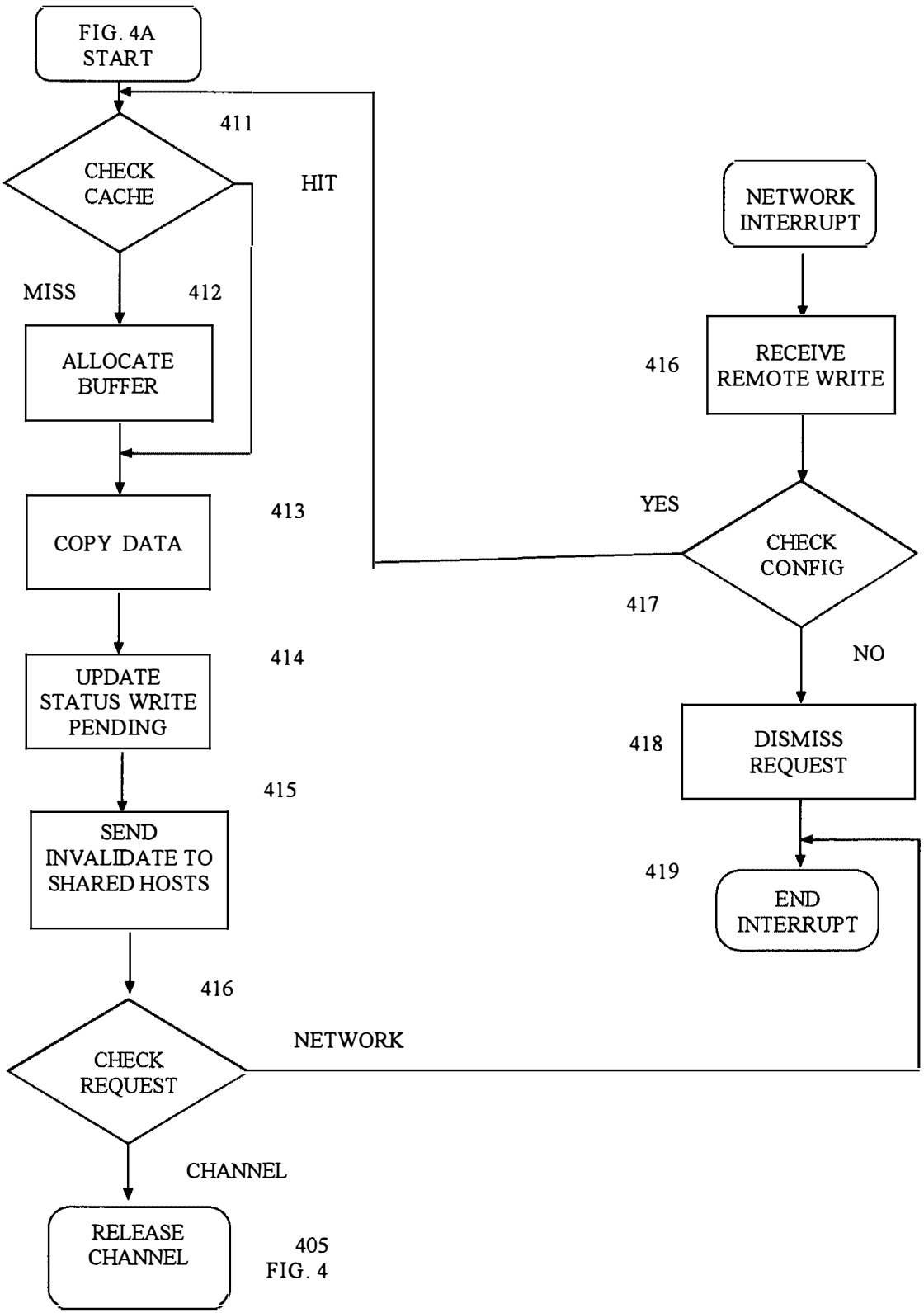

FIG. 4A WRITE EXCLUSIVE

09/236406

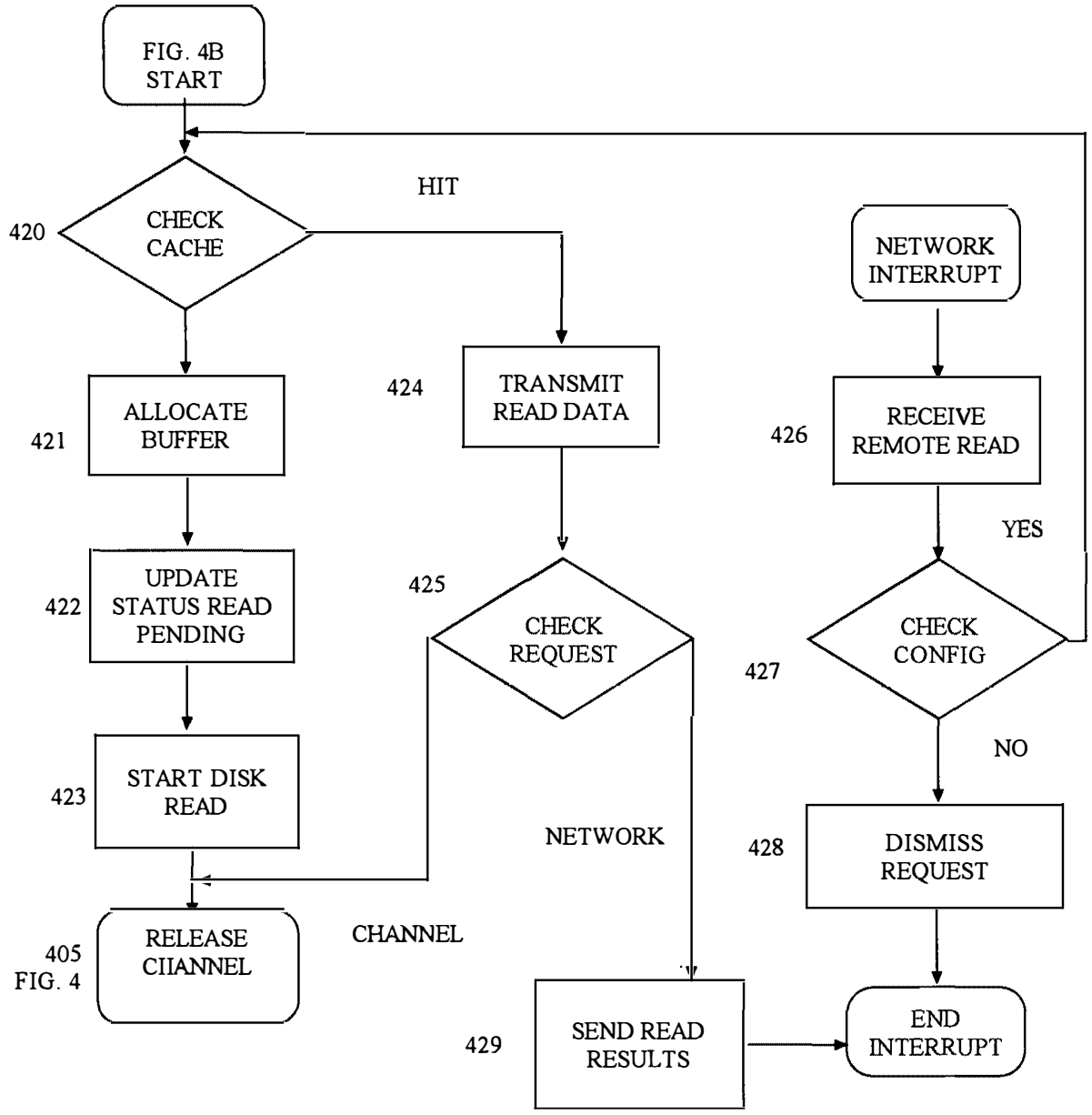

FIG. 4B READ EXCLUSIVE

09/236409

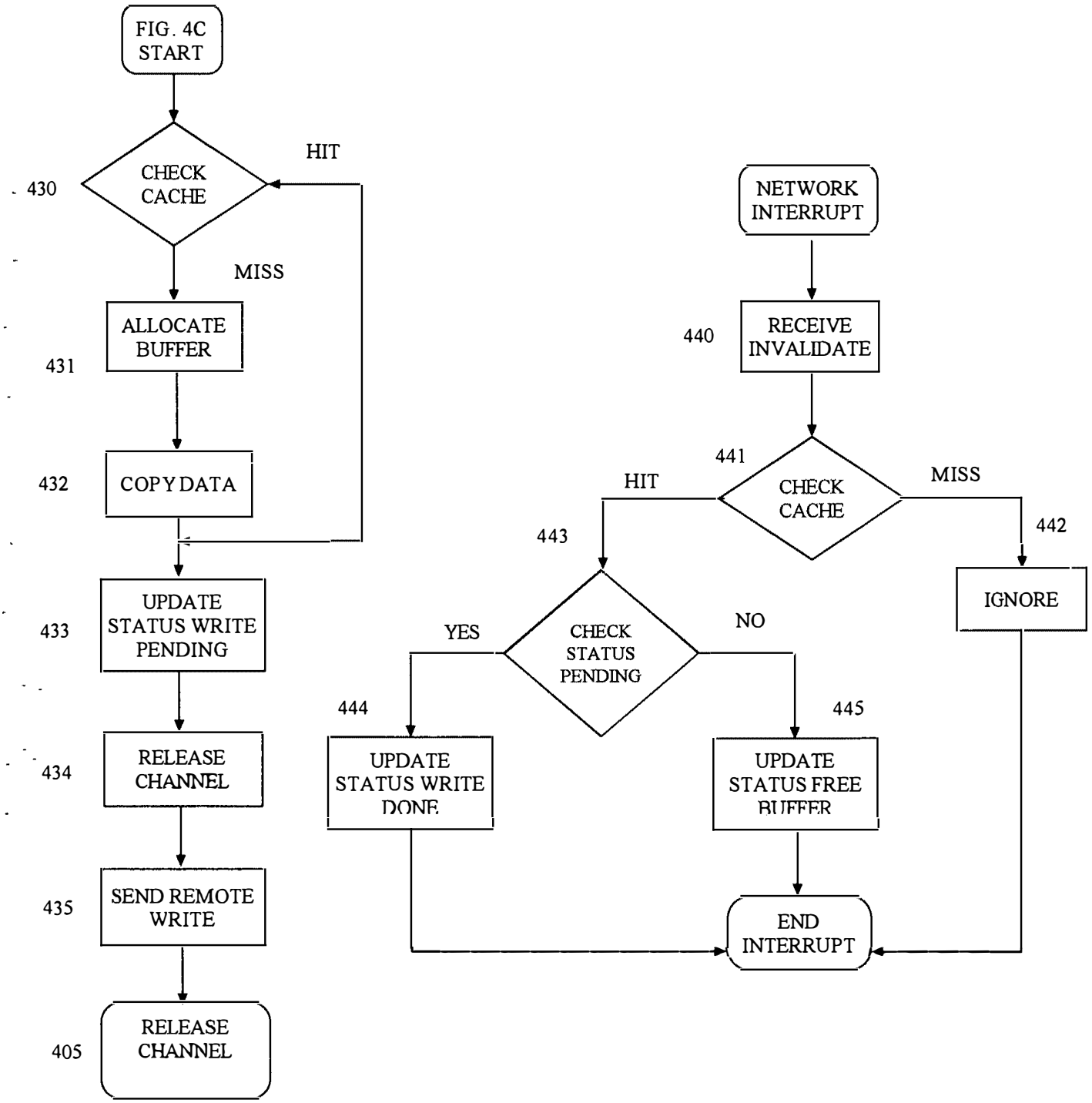

FIG. 4C WRITE SHARED

09/236409

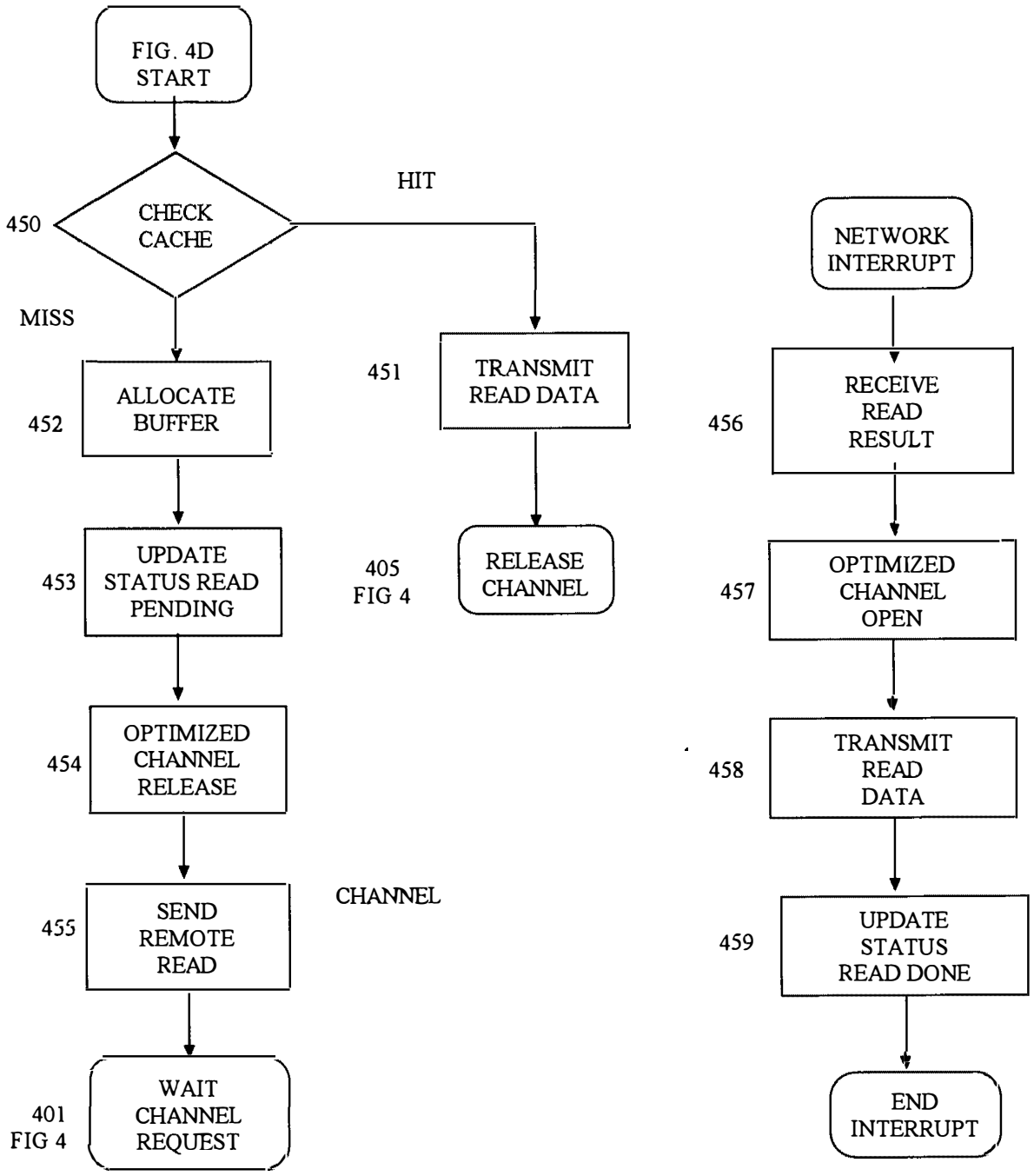

FIG. 4D READ SHARED

09/236409

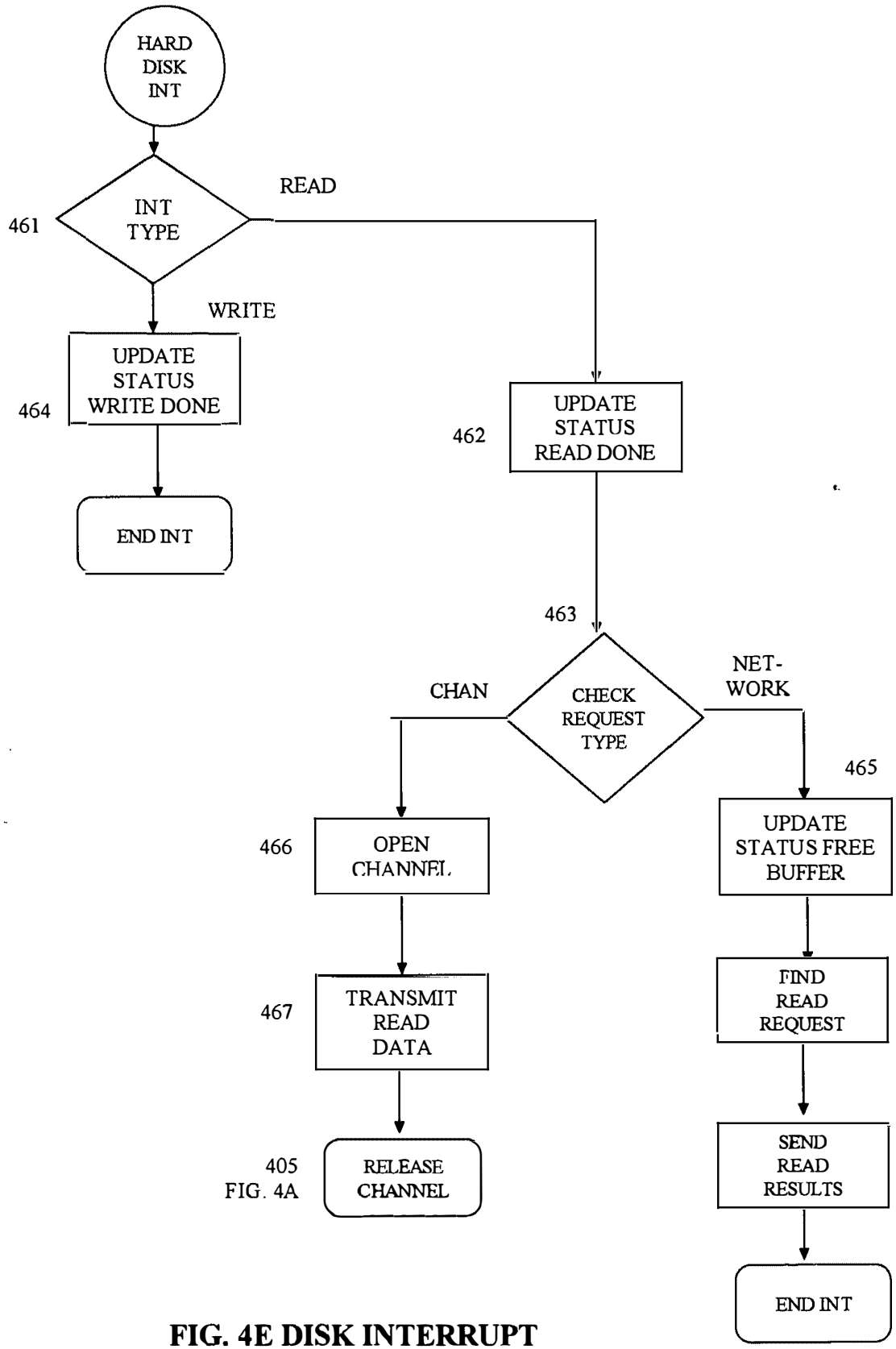

FIG. 4E DISK INTERRUPT

09/236,409

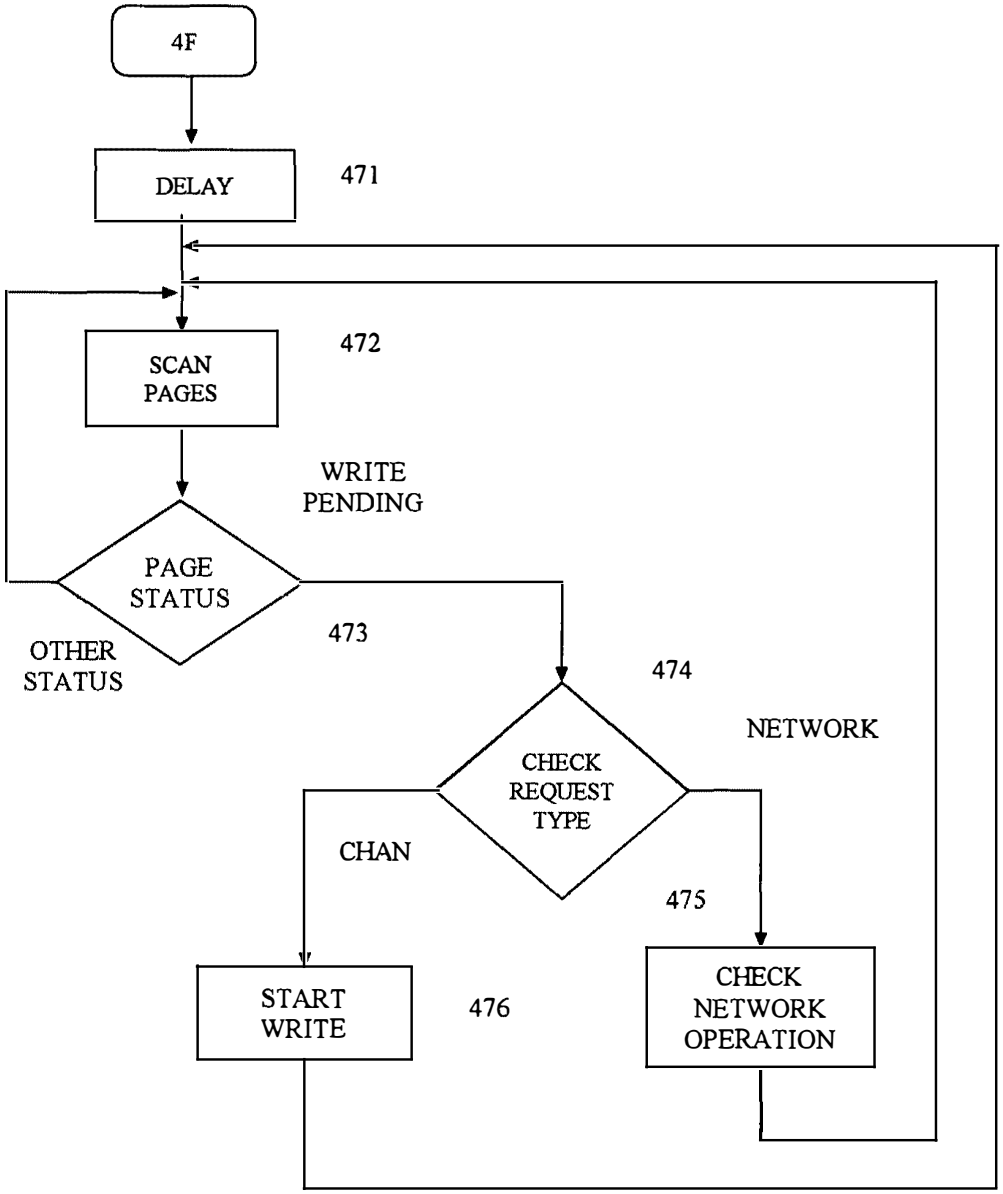

FIG. 4F MEMORY FLUSHER

69/236409

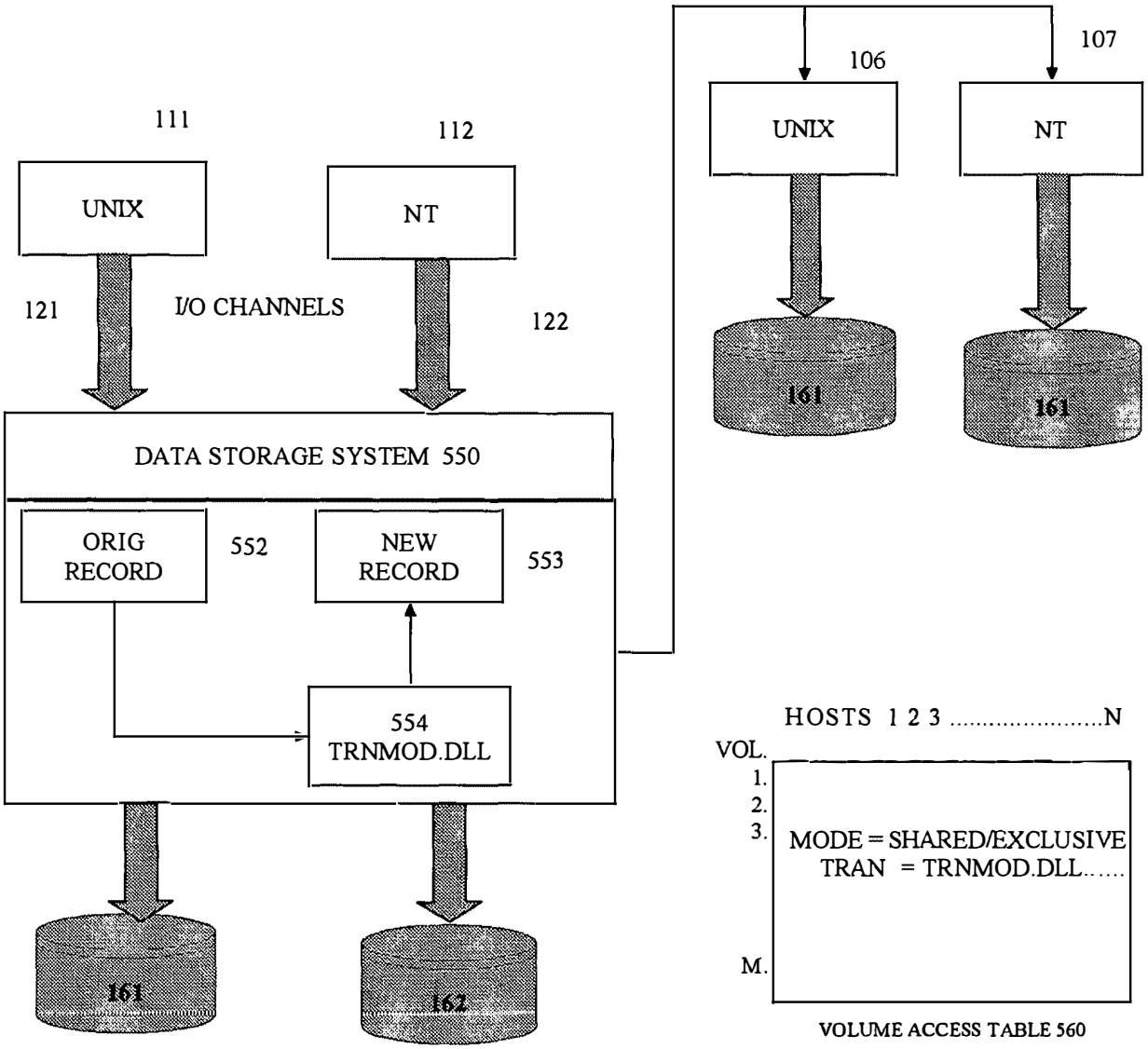

HOSTS 1 2 3 .....N

VOL.
1.
2.
3.
M.

MODE = SHARED/EXCLUSIVE
TRAN = TRNMOD.DLL.....

VOLUME ACCESS TABLE 560

```
LD = LOADLIBRARY("TRNMOD.DLL");
APROC = GETPROCADDRESS(
LD, "TRAN_READREC");

APROC(ORIG_RECORD, NEW_RECORD);
```

LOADING TRANSLATOR 570

FIG. 5 DATA SHARING

PR4

UNITED STATES PATENT AND TRADEMARK OFFICE

UNITED STATES DEPARTMENT OF COMMERCE
United States Patent and Trademark Office
Address: COMMISSIONER OF PATENTS AND TRADEMARKS
Washington, D.C. 20231
www.uspto.gov

APPLICATION NO.	FILING DATE	FIRST NAMED INVENTOR	ATTORNEY DOCKET NO.	CONFIRMATION NO.
09/236,409	01/22/1999	ILYA GERTNER		1514

7590 06/28/2002

ILYA GERTNER
NETWORK DISK INC
5 GASLIGHT LANE
FRAMINGHAM, MA 01701

EXAMINER
NGUYEN, THAN VINH

ART UNIT	PAPER NUMBER
2187	

DATE MAILED: 06/28/2002 #14

Please find below and/or attached an Office communication concerning this application or proceeding.

PTO-90C (Rev. 07-01)

PR4

UNITED STATES DEPARTMENT OF COMMERCE
Patent and Trademark Office

Address: ASSISTANT COMMISSIONER FOR PATENTS
Washington, D.C. 20231

APPLICATION NO./ CONTROL NO.	FILING DATE	FIRST NAMED INVENTOR / PATENT IN REEXAMINATION	ATTORNEY DOCKET NO.

EXAMINER

ART UNIT	PAPER
	14

DATE MAILED:

Please find below and/or attached an Office communication concerning this application or proceeding.

Commissioner of Patents and Trademarks

PTO-90C (Rev.3-98)

PRG

Office Action Summary	Application No.	Applicant(s)	
	09/236,409	GERTNER, ILYA	
	Examiner	Art Unit	
	Than Nguyen	2187	

-- The MAILING DATE of this communication appears on the cover sheet with the correspondence address --

Period for Reply

A SHORTENED STATUTORY PERIOD FOR REPLY IS SET TO EXPIRE 3 MONTH(S) FROM THE MAILING DATE OF THIS COMMUNICATION.

- Extensions of time may be available under the provisions of 37 CFR 1.136(a). In no event, however, may a reply be timely filed after SIX (6) MONTHS from the mailing date of this communication.
- If the period for reply specified above is less than thirty (30) days, a reply within the statutory minimum of thirty (30) days will be considered timely.
- If NO period for reply is specified above, the maximum statutory period will apply and will expire SIX (6) MONTHS from the mailing date of this communication.
- Failure to reply within the set or extended period for reply will, by statute, cause the application to become ABANDONED (35 U.S.C. § 133).
- Any reply received by the Office later than three months after the mailing date of this communication, even if timely filed, may reduce any earned patent term adjustment. See 37 CFR 1.704(b).

Status

1)☒ Responsive to communication(s) filed on 25 April 2002 .

2a)☒ This action is **FINAL**. 2b)☐ This action is non-final.

3)☐ Since this application is in condition for allowance except for formal matters, prosecution as to the merits is closed in accordance with the practice under *Ex parte Quayle*, 1935 C.D. 11, 453 O.G. 213.

Disposition of Claims

4)☒ Claim(s) 1-4 is/are pending in the application.

4a) Of the above claim(s) _____ is/are withdrawn from consideration.

5)☐ Claim(s) _____ is/are allowed.

6)☒ Claim(s) 1-4 is/are rejected.

7)☐ Claim(s) _____ is/are objected to.

8)☐ Claim(s) _____ are subject to restriction and/or election requirement.

Application Papers

9)☐ The specification is objected to by the Examiner.

10)☐ The drawing(s) filed on _____ is/are: a)☐ accepted or b)☐ objected to by the Examiner.

Applicant may not request that any objection to the drawing(s) be held in abeyance. See 37 CFR 1.85(a).

11)☐ The proposed drawing correction filed on _____ is: a)☐ approved b)☐ disapproved by the Examiner.

If approved, corrected drawings are required in reply to this Office action.

12)☐ The oath or declaration is objected to by the Examiner.

Priority under 35 U.S.C. §§ 119 and 120

13)☐ Acknowledgment is made of a claim for foreign priority under 35 U.S.C. § 119(a)-(d) or (f).

a)☐ All b)☐ Some * c)☐ None of:

1.☐ Certified copies of the priority documents have been received.

2.☐ Certified copies of the priority documents have been received in Application No. _____ .

3.☐ Copies of the certified copies of the priority documents have been received in this National Stage application from the International Bureau (PCT Rule 17.2(a)).

* See the attached detailed Office action for a list of the certified copies not received.

14)☐ Acknowledgment is made of a claim for domestic priority under 35 U.S.C. § 119(e) (to a provisional application).

a) ☐ The translation of the foreign language provisional application has been received.

15)☐ Acknowledgment is made of a claim for domestic priority under 35 U.S.C. §§ 120 and/or 121.

Attachment(s)

1) ☐ Notice of References Cited (PTO-892)
2) ☐ Notice of Draftsperson's Patent Drawing Review (PTO-948)
3) ☐ Information Disclosure Statement(s) (PTO-1449) Paper No(s) _____ .
4) ☐ Interview Summary (PTO-413) Paper No(s). _____ .
5) ☐ Notice of Informal Patent Application (PTO-152)
6) ☐ Other: .

Google Exhibit 1002
Google v. LS Cloud Storage Technologies
IPR2023-00777, Page 114 of 280

DETAILED ACTION

1. The is a response to the amendment, filed 4/25/02.

2. Claims 1-4 are pending.

Claim Objections

3. Claim 1, are objected to because of the following informalities:

(Claim 1, line 7 of claim) "cash" should be --cache--.

(Claim 2, line 8 of claim) "starts" should be --performs--

(Claim 2, line 8 of claim) Insert --the-- before "disk" and "cache".

Appropriate correction is required.

Response to Arguments

4. Applicant's arguments with respect to claims 1-4 have been considered but are moot in view of the new ground(s) of rejection. Applicant has amended the claims to include new limitations which require new consideration and rejection.

Claim Rejections - 35 USC § 112

5. The following is a quotation of the second paragraph of 35 U.S.C. 112:

The specification shall conclude with one or more claims particularly pointing out and distinctly claiming the subject matter which the applicant regards as his invention.

6. Claims 1-4 are rejected under 35 U.S.C. 112, second paragraph, as being indefinite for failing to particularly point out and distinctly claim the subject matter which applicant regards as the invention.

7. As to claims 1,3,4 Applicant claims a volume access table is used to improve performance without any indication of how that is done/achieved. Thus, one of ordinary skills would not know what the volume access table is nor how to use it to improve performance of the data storage system.

8. Claim 2 is also rejected for incorporating the limitations of claim 1.

9. As to claim 3, Claim 1 is an apparatus claim. Claim 3 depends on claim 1 but adds method steps. Since both an apparatus and method is being claimed, one of ordinary skills cannot determine if apparatus claims an apparatus or a method (the scope cannot be determined).

Claim Rejections - 35 USC § 102

10. The following is a quotation of the appropriate paragraphs of 35 U.S.C. 102 that form the basis for the rejections under this section made in this Office action:

> A person shall be entitled to a patent unless --
>
> (e) the invention was described in a patent granted on an application for patent by another filed in the United States before the invention thereof by the applicant for patent, or on an international application by another who has fulfilled the requirements of paragraphs (1), (2), and (4) of section 371(c) of this title before the invention thereof by the applicant for patent.

11. Claims 1,4 are rejected under 35 U.S.C. 102(e) as being anticipated by Olnowich (US 6,044,438).

As to claim 1:

Olnowich discloses memory controller for controller memory accesses across networks in distributed shared memory processing systems. Olnowich discloses a data storage system comprising:

a network (Figures 1A - 2B) interconnecting a plurality of PCS, each of which includes:

an I/O channel adapter (I/O controller 52 facilitates data transfer between devices on the network; Figure 2B; 10/15-54) for transmitting data over the channel and a network adapter (network adapter 10 facilitates transmission of messages/signals over the network; Figure 2B; 9/60-10/10) for transmitting control signals and data over the network;

"front-end" software for handling I/O requests arriving to the I/O channel adapter and the network adapter (it is inherent that Olnowich has software/firmware to control I/O requests between the I/O controller and the network adapter because it processes I/O requests, which inherently requires control software to carry out its functions (Figure 2B; col 10 ln 49 - col 11 ln 62);

cache manager software for handling data stored in the cache memory of the PC, said cache memory comprises a portion of a distributed cache memory stored in the plurality of PCS interconnected by the network (memory controller 210 controls cache 204; Figure 2) ;

"back-end" software for handling reads and writes to disks (software/firmware to process local read/write requests; col 16 lns 29-39; it should be noted that all computer systems have

"back-end" software to control read/write to memory devices(main memory, disks, back-up storage, etc..);

a configuration manager software module for managing resources in the cache manager to ensure consistency of data stored in the distributed cache (maintaining cache coherency over network; abstract; cols 7-8; 16/29-39); and

a volume access table used by the cache manager to "improve" performance of the data storage system (invalidate directory used to maintain coherency, thus improves performance; 3/29-45; 16/40-51).

As to claim 4:

Olnowich teaches the PCS are off-the-shelf hardware components (the computers on the network are normal off-the-shelf/commercially available computer systems; Figures 1-3). Olnowich teaches accepting I/O requests (network adapter 10 facilitates transmission of messages/signals over the network; Figure 2B; 9/60-10/10) and using a volume access table to improve performance of cache management (invalidate directory used to maintain coherency, thus improves performance; 3/29-45; 16/40-51).

Allowable Subject Matter

12. Claim 2 would be allowable if rewritten to overcome the rejection(s) under 35 U.S.C. 112, second paragraph, set forth in this Office action and to include all of the limitations of the base claim and any intervening claims.

13. The following is a statement of reasons for the indication of allowable subject matter:

14. The prior art of record does not teach including software that checks: if an access mode is set to exclusive mode, and if so data storage subsystem caches both read and write and the data storage system sends invalidate messages to remote storage systems; and if the access mode is set to shared, the storage system caches only reads; and if the access mode is set to a value other than the exclusive or shared, the configuration manager perform reads and writes directly to the disk without using a cache memory.

Conclusion

15. Applicant's amendment necessitated the new ground(s) of rejection presented in this Office action. Accordingly, **THIS ACTION IS MADE FINAL.** See MPEP § 706.07(a). Applicant is reminded of the extension of time policy as set forth in 37 CFR 1.136(a).

A shortened statutory period for reply to this final action is set to expire THREE MONTHS from the mailing date of this action. In the event a first reply is filed within TWO MONTHS of the mailing date of this final action and the advisory action is not mailed until after the end of the THREE-MONTH shortened statutory period, then the shortened statutory period will expire on the date the advisory action is mailed, and any extension fee pursuant to 37 CFR 1.136(a) will be calculated from the mailing date of the advisory action. In no event, however, will the statutory period for reply expire later than SIX MONTHS from the date of this final action.

16. Any inquiry concerning this communication or earlier communications from the examiner should be directed to Than Nguyen whose telephone number is (703) 305-3866. The examiner can normally be reached on M-F from 8:00 a.m. to 3:00 p.m. EST.

17. Any inquiry of a general nature or relating to the status of this application should be directed to the Group receptionist whose telephone number is (703) 305-9600.

18. The fax phone number for Art Unit 2187 is 703-308-9051 or 703-308-9052.

Than Nguyen

Primary Patent Examiner

June 18, 2002

04-26-02

Application/Control Number: 09/236,409

OIPE JC181 APR 2 5 2002 PATENT & TRADEMARK OFFICE

2187
#13/C
Amdt
5-2-02
OC

Applicant: Ilya Gertner
Serial No.: 09/236,409
Filing Date: January 22, 1999
Art Unit: 2187
Examiner: Than Nguyen
Title: Data Storage System Comprising a Network of PCs and Method Using Same

Assistant Commissioner of Patents
Washington, D.C. 20231

RECEIVED
MAY 0 1 2002
Technology Center 2100

Sir:

In response to the official action dated March 26, 2002, please amend the specification and claims as follows.

In the claims:

Claim 1 has been further limited, Claims 2 and 4 have been modified to correct errors notes by Examiner. Claim 3 has been re-written to more particularly define the invention in patentable manner over the cited prior art.

In the specification:

The specification has been amended editorially and to correct those errors noted by Examiner.

In the follow up pages this amendment includes:

- *claims, clean version,*
- *specifications, clean version with instructions for entry,*
- *changes, claims version with markings to show changes made in claims,*
- *changes, specifications version with markings to show changes made in specifications,*
- *remark, describing the rationale for changes and response to Examiner's objections.*

In lie of the amendment, we respectfully request Examiner to reconsider his position and allow Claims 1-4.

Date: April 25, 2002

Respectfully Submitted,

Ilya Gertner

Ilya Gertner
Applicant Pro Se
President of Network Disk, Inc.
5 Gaslight Lane
Framingham, MA 01702
Telephone: 603/884-5014, 508/872-4586
Facsimile: 508/872-2414

Application/Control Number: 09/236.409

CLAIMS:

1. A data storage system comprising:
a network interconnecting a plurality of PCs each of which includes:

Sub D1

an I/O channel adapter for transmitting data over the channel and a network adapter for transmitting control signals and data over the network;

front-end software for handling I/O requests arriving to the I/O channel adapter and the network adapter;

C1

cache manager software for handling data stored in cash memory of the PC, said cache memory comprises a portion of a distributed cache memory stored in the plurality of PCs interconnected by the network;

back-end software for handling reads and writes to disks;

a configuration manager software module for managing resources in the cache manager to ensure consistency of data stored in the distributed cache; and

a volume access table used by the cache manager to improve performance of said data storage system.

2. The system of claim 1, wherein the configuration manager includes software that checks access mode in volume access table:

if an access mode is set to exclusive mode, and if so data storage subsystems caches both reads and writes and the data storage system sends invalidate messages to remote storage systems; and

if the access mode is set to shared, the storage system caches only reads; and

if the access mode is set to a value other than the exclusive or shared, the configuration manager starts reads and writes directly to disk without using cache memory.

C

Sub D1

3 The system of claim 1 wherein a host accesses a remote disk without incurring network overhead comprising steps of:

Step 1: local host issues a request over I/O channel to a local PC; and

Step 2: configuration manager on said local PC routes said request to a remote PC via network; and

C1 Cont'd

Step 3: remote PC checks volume access table to improve performance; and

Step 4: remote PC starts I/O operation on remote disk and returns data to said local PC; and

Step 5: said local PC returns data to said local hosts via said I/O channel; and

Step 6: said local PC checks volume access table to improve performance; and

Step 7: configuration manager maintains consistency of data stored in local PC and remote PCs.

4. The system of claim 1, wherein PCs are using off-the-shelf hardware and operating system, and new software components including:

an adapter I/O software modified to accept incoming I/O requests from a host; and

a volume access table used by configuration manager to improve performance of cache management in said data storage system.

C

Application/Control Number: 09/236.409

OIPE JC68
APR 2 5 2002
PATENT & TRADEMARK OFFICE

CHANGES, CLAIMS VERSION WITH MARKINGS TO SHOW CHANGES MADE

Italics font is used for claims in the original text; Times New Roman font is used for claims in the new text; the new inserted text is underlined; old text to be replaced is enclosed in brackets.

RECEIVED
MAY 0 1 2002
Technology Center 2100

1 *A data storage system comprising:*
a network interconnecting a plurality of PCs each of which includes:

an I/O channel adapter for transmitting data over the channel and a network adapter for transmitting control signals and data over the network;

front-end software for handling I/O requests arriving to the I/O channel adapter and the network adapter;

cache manager software for handling data stored in cash memory of the PC, said cache memory comprises a portion of a distributed cache memory stored in the plurality of PCs interconnected by the network;

back-end software for handling reads and writes to disks; and

a configuration manager software module for managing resources in the cache manager to ensure consistency of data stored in the distributed cache[.]

1 A data storage system comprising:
a network interconnecting a plurality of PCs each of which includes:

an I/O channel adapter for transmitting data over the channel and a network adapter for transmitting control signals and data over the network;

front-end software for handling I/O requests arriving to the I/O channel adapter and the network adapter;

cache manager software for handling data stored in cash memory of the PC, said cache memory comprises a portion of a distributed cache memory stored in the plurality of PCs interconnected by the network;

back-end software for handling reads and writes to disks;

a configuration manager software module for managing resources in the cache manager to ensure consistency of data stored in the distributed cache; and

a volume access table used by the cache manager to improve performance of said data storage system.

C

CHANGES, CLAIMS VERSION WITH MARKINGS TO SHOW CHANGES MADE

Italics font is used for claims in the original text; Times New Roman font is used for claims in the new text; the new inserted text is underlined; old text to be replaced is enclosed in brackets.

2 *The system of Claim 1, wherein the configuration manager includes software that checks:*

if an access mode is set to exclusive mode, and if so data storage subsystems caches both reads and writes and the data storage system sends invalidate messages to remote storage systems; and

if the access mode is set to shared, the storage system caches only reads; and

if the access mode is set to [no-access, the configuration manager rejects all requests directed to the data storage system].

2 The system of Claim 1, wherein the configuration manager includes software that checks:

if an access mode is set to exclusive mode, and if so data storage subsystems caches both reads and writes and the data storage system sends invalidate messages to remote storage systems; and

if the access mode is set to shared, the storage system caches only reads; and

if the access mode is set to <u>a value other than the exclusive or shared, the configuration manager starts reads and writes directly to disk without using cache memory.</u>

CHANGES CLAIMS VERSION WITH MARKINGS TO SHOW CHANGES MADE

Italics font is used for claims in the original text; Times New Roman font is used for claims in the new text; the new inserted text is underlined; old text to be replaced is enclosed in brackets.

Claim 3 has been re-written to more particularly define the invention in patentable manner over the cited prior art.

3 *The system of claim 1 wherein the configuration manager comprises software for synchronizing configuration files on remote storage systems comprising the following modulars:*

software for receiving a request for an update of a configuration file;

software for suspending execution of configuration managers on remote nodes;

software for updating configuration files on remote nodes;

software for resuming execution of remote configuration managers.

3 The system of claim 1 wherein a host accesses a remote disk without incurring network overhead comprising steps of:

The system of claim 1 wherein a host accesses a remote disk without incurring network overhead comprising steps of:

Step 1: local host issues a request over I/O channel to a local PC; and
Step 2: configuration manager on said local PC routes said request to a remote PC via network; and
Step 3: remote PC checks volume access table to improve performance; and
Step 4: remote PC starts I/O operation on remote disk and returns data to said local PC; and
Step 5: said local PC returns data to said local hosts via said I/O channel; and
Step 6: said local PC checks volume access table to improve performance; and
Step 7: configuration manager maintains consistency of data stored in local PC and remote PCs.

C

CHANGES, CLAIMS VERSION WITH MARKINGS TO SHOW CHANGES MADE

Italics font is used for claims in the original text; Times New Roman font is used for claims in the new text; the new inserted text is underlined; old text to be replaced is enclosed in brackets.

4 *The system of claim 1, wherein PCs are using off-the-shelf hardware components[.]*

4 The system of claim 1, wherein PCs are using off-the-shelf hardware, <u>and new software components including:</u>

<u>an adapter I/O software modified to accept incoming I/O request from a host; and</u>

<u>a volume access table used by configuration manager to improve performance of cache management in said data storage system.</u>

Application/Control Number: 09/236.409

APR 2 5 2002
PATENT & TRADEMARK OFFICE

REMARK

This is Applicant's response to Detailed Action Report. The sections below are numbered to match appropriate Section in the Detailed Action.

RECEIVED
MAY 0 1 2002
Technology Center 2100

1. Applicant agrees: Claims 1-4 are elected. Claims 5-11 are canceled and will be selected in the follow up patent application.

2. Applicant agrees: IDS with claims amendment has been submitted and is considered.

3. Applicant disagrees with the rejection of Claims 2, 3 according to 35 USC § 112.

As to claim 2, Examiner noted an error that "no-access" mode cannot be found in the specification.

In response, Applicant corrected the error by re-phrasing the claim without the word no-access. In addition, Applicant inserted into specifications after (pg 7 ln 8) more detailed information that explains operations of cache manager and its use of volume access table. Applications also points out that he already disclosed another detail of the volume access table using translation module on (page 10, ln 1) which Applicant used in Claim 5 and intends to use in the future patent application.

As to claim 3, Examiner noted vague use of the term software. In response, Applicant corrected the error by replacing old Claim 3. In an attempt to reach an agreement with Examiner, Applicant has re-written Claim 3 to more particularly define the invention in patentable manner over the cited prior art.

4. Applicant disagrees with the rejection of Claims 1, 4 as being anticipated by Olnowich.

Applicant disagrees. In 6,122,659 (col 1 ln 25) Olnowich defines the field of invention related to parallel processing systems comprised of plurality of nodes communicating via messages. In 6,044,438 (col 1 ln 25) Olnowich defines the same field of parallel processing systems comprised of plurality of nodes communicating via messages.

It is well known to those skilled in the art that parallel processing systems refer to computer systems which in greater detail are knows a hosts that implement applications for users.

It is also well known to those skilled in the art that data storage system refer to computer systems that are connected via I/O channels to hosts. In this application 09/236,409 (page 1 ln 8) Applicant discloses a data storage system that permits independent access from local hosts connected via/O channels. Applicant further discloses in (page 1 ln 21) the purpose of a data storage system is to improve the performance of applications running on the host computer by offloading I/O processing from the host to the data storage system.

It is well known to those skilled in the art that methods used in data storage systems are different from methods used in hosts. In multiprocessor hosts memory reference patterns are unknown therefore caching algorithm use measured statistics. In contrast, in data storage systems one can streamline caching algorithm by taking advantage of application knowledge such as a remote disk on a remote PC is referenced only infrequently due to the nature of data stored there. This knowledge allows a user or a systems administrator to specify in various system tuning parameters in volume access table that is later used by cache configuration manager to further improve performance of a data storage system. In contrast, in a multiprocessor system, a systems administrator does not (and cannot) specify memory reference patterns.

Continuing as to Claim 1, Examiner writes Olnowich discloses a plurality of PCS in (Figure 1A-2B).

Applicant disagrees. Applicant has not found PCS in 6,122,659. In fact, Olnowich uses terms network node, processing node.

It is well known to those skilled in the art that PCS refer to standard off-the-shelf computers that can be purchased in a retail store. It is also known to those skilled in the art that terms network node, processing node, I/O controller and network controller are generic terms in any computer system. It is also well known to those skilled in the art that special purpose hardware to provide remote memory accesses across network as disclosed by Olnowich (Abstract) is not an off-the-shelf component found in PCS.

Continuing as to Claim 1 Examiner writes front-end software for handling I/O requests arriving to the I/O channel adapter and network adapter (it is inherent that Olnowich has software to control I/O requests between the I/O controller and network (Figure 2B; col 10 ln 49- col 11 ln 62).

Applicant disagrees. Applicant has not found the term front-end software in Olnowich's disclosure. Applicant also cannot find software to control I/O request between the I/O controller and network adapter. The fact is Olnowich discloses a method to control local memory and remote memory (col 11 ln3). Olnowich discloses software to expand physical addressing to virtual addressing using different sizes of distributed memory (col 11 ln 20). Further, Olnowich discloses I/O controller for connecting to I/O devices via I/O buys and internal I/O bus connecting to local registers (col 10 ln 52). Olnowich is not disclosing software to control I/O request between the I/O controller and network adapter. Handling I/O requests between an I/O controller and network adapter requires different methods in a data storage system than those disclosed by Olnowich. Methods used in a data storage system are intend to optimize the performance of I/O operation with the intent of offloading CPU processing from a host to a data storage systems which is totally different from the methods used in multiprocessors.

Continuing as to Claim 1, Examiner writes back-end software for handling reads and writes to disks (process read/write requests; (col 16 ln 29-39);

Applicant has not found in Olnowich back-end software for handling reads and writes. The fact is Onowich discloses a network adapter designed specifically to handle shared memory multiprocessor cache coherency efficiently over network (col 16 ln 29).

Continuing to Claim 1, Examiner writes, a configuration manager software module for managing resources in the cache manager to ensure consistency of data stored in the distributed cache.

Applicant has not found a cache manager in Olnowich.
The fact is that Applicant describes a data storage system that uses a configuration manager and a volume access table to tune the performance of cache management operation. This idea of using a user-edited volume access table to improve cache operation is completely different from cache management in multiprocessor systems. In fact, multiprocessor systems cannot predict computation and cannot take advantage of user provided information such as volume access table.

In an attempt to reach an agreement with Examiner Applicant agrees to adds a further limitation to Claim 1.

> *a volume access table cache manager uses to improve performance of said data storage system*

As to Claim 4, Examiner writes Olnowich teaches the PCS are off-the-shelf hardware components (the computers on the network are normal off-the-shelf computer systems; Fig 1-3).

Applicant disagrees to rejection of claim 4 because Olnowich uses special;-purpose hardware to improve efficiency of cache coherency (Abstract). Special-purpose hardware is not found in normal off-the-shelf computer systems. In (page 4 ln 24) Applicant specifies a data storage system using off-the-shelf standard components comprising a network of PCS including an I/O channel adapter and network adapter and a method for managing distributed cache memory stored in the plurality of PCS interconnected by the network. The use of standard PCS reduces the cost of the data storage system. The use of the network of PCS permits building large, high-performance, data storage systems. In greater detail (page 6 ln 24) Applicant specifies standard I/O channels, networks link and configuration manger module to ensure consistency of cache.

In an attempt to reach an agreement with Examiner, Applicant agrees to add further two limitations to
Claim 4:

> an adapter I/O software modified to accept incoming I/O request from a host; and
>
> a volume access table used by configuration manager to improve performance of cache management in said data storage system.

5. Overview of References Cited

Applicant reviewed Examiner's detailed action and references cited. In 6,044,438, 6,122,659 Olnowich discloses a memory controller, a special-purpose hardware unit for building a multiprocessor. In 6,0,026,461 and 5,887,146 Baxter discloses another variation for building a shared-memory multiprocessor. In this response Applicant compared methods used in building a multiprocessor to methods used in building a data storage system. It is well known to those skilled in the art that multiprocessor systems refer to computer systems which are also known as hosts that run applications for users. It is also well-known to those skilled in the art that data storage systems refer to computer systems that connect via I/O channels to hosts. It is also well known to those skilled in that art that methods used in data storage systems are different from methods used in hosts running applications. Data storage systems are used to offload I/O and network computations from host in order to improve performance of said hosts. This objective is different from the design objectives in multiprocessor systems. In 5,577,226 Percival discloses methods for disk caching in an operating system used on Vax or Alpha AXP boots. Disk caching on a host uses completely different methods for managing memory by comparing to data storage systems. In this application said data storage system uses configuration manager and volume access table that can edited by a user to provide efficient utilization of memory in a given data storage system.

C

Application/Control Number: 09/236.409

SPECIFICATIONS:

Insert after (page 6, ln 34)

C2

In FIG 3, front-end module 310 including I/O adapter driver software has been modified to accept target SCSI I/O requests from host 111 and 112. Said front-end module handles I/O requests in such a manner wherein hosts 111 and 112 are not aware of a data storage systems. Hosts 111 and 112 issue I/O requests as if it's going to a standard disk.

Insert after (page 7 ln 8)

Volume access table (450) in FIG 4 contains a mapping between hosts and volumes specifying an access mode value. If the access mode is set to neither shared nor exclusive configuration manager forwards I/O requests directly to disk. In addition to the access mode said volume access table may contain other values that help to manager and improve performance of said data storage system.

C3

In another embodiment of this application in FIG 5, Applicant illustrates yet another application of the volume access table including a translation module for a given host to volume mapping. The translation module is a dynamically loadable library that can be changed, compiled and linked at run-time. Applicant further specifies the translation module in (page 10, ln 12).

A user of a data storage system can externally set the values and parameters in a volume access table. For each host and volume pair a user can explicitly specify the access mode value. For some applications, where data on a remote volume is accessed infrequently, the user may want to specify other than shared or exclusive in order to disable cache for the remote volume. By disabling caching, the user has entirely eliminated cache coherency traffic for said volume. In a data storage system a user or a system administrator actively monitors and changes the behavior of a cache manager by changing values in a volume access table in order to improve performance of said data storage system.

C

18

UNITED STATES PATENT AND TRADEMARK OFFICE

UNITED STATES DEPARTMENT OF COMMERCE
United States Patent and Trademark Office
Address: COMMISSIONER OF PATENTS AND TRADEMARKS
Washington, D.C. 20231
www.uspto.gov

APPLICATION NO.	FILING DATE	FIRST NAMED INVENTOR	ATTORNEY DOCKET NO.	CONFIRMATION NO.
09/236,409	01/22/1999	ILYA GERTNER		1514

7590 03/26/2002

ILYA GERTNER
NETWORK DISK INC
5 GASLIGHT LANE
FRAMINGHAM, MA 01701

EXAMINER
NGUYEN, THAN VINH

ART UNIT	PAPER NUMBER
2187	

DATE MAILED: 03/26/2002 #12

Please find below and/or attached an Office communication concerning this application or proceeding.

PTO-90C (Rev. 07-01)

Office Action Summary	Application No.	Applicant(s)
	09/236,409	GERTNER, ILYA
	Examiner	Art Unit
	Than Nguyen	2187

-- The MAILING DATE of this communication appears on the cover sheet with the correspondence address --

Period for Reply

A SHORTENED STATUTORY PERIOD FOR REPLY IS SET TO EXPIRE 1 MONTH(S) FROM THE MAILING DATE OF THIS COMMUNICATION.

- Extensions of time may be available under the provisions of 37 CFR 1.136(a). In no event, however, may a reply be timely filed after SIX (6) MONTHS from the mailing date of this communication.
- If the period for reply specified above is less than thirty (30) days, a reply within the statutory minimum of thirty (30) days will be considered timely.
- If NO period for reply is specified above, the maximum statutory period will apply and will expire SIX (6) MONTHS from the mailing date of this communication.
- Failure to reply within the set or extended period for reply will, by statute, cause the application to become ABANDONED (35 U.S.C. § 133).
- Any reply received by the Office later than three months after the mailing date of this communication, even if timely filed, may reduce any earned patent term adjustment. See 37 CFR 1.704(b).

Status

1)☒ Responsive to communication(s) filed on 9/25/01 .

2a)☐ This action is **FINAL**. 2b)☒ This action is non-final.

3)☐ Since this application is in condition for allowance except for formal matters, prosecution as to the merits is closed in accordance with the practice under *Ex parte Quayle*, 1935 C.D. 11, 453 O.G. 213.

Disposition of Claims

4)☒ Claim(s) 1-4 is/are pending in the application.

4a) Of the above claim(s) _____ is/are withdrawn from consideration.

5)☐ Claim(s) _____ is/are allowed.

6)☒ Claim(s) 1-4 is/are rejected.

7)☐ Claim(s) _____ is/are objected to.

8)☐ Claim(s) _____ are subject to restriction and/or election requirement.

Application Papers

9)☐ The specification is objected to by the Examiner.

10)☐ The drawing(s) filed on _____ is/are: a)☐ accepted or b)☐ objected to by the Examiner.

Applicant may not request that any objection to the drawing(s) be held in abeyance. See 37 CFR 1.85(a).

11)☐ The proposed drawing correction filed on _____ is: a)☐ approved b)☐ disapproved by the Examiner.

If approved, corrected drawings are required in reply to this Office action.

12)☐ The oath or declaration is objected to by the Examiner.

Priority under 35 U.S.C. §§ 119 and 120

13)☐ Acknowledgment is made of a claim for foreign priority under 35 U.S.C. § 119(a)-(d) or (f).

a)☐ All b)☐ Some * c)☐ None of:

1.☐ Certified copies of the priority documents have been received.

2.☐ Certified copies of the priority documents have been received in Application No. _____ .

3.☐ Copies of the certified copies of the priority documents have been received in this National Stage application from the International Bureau (PCT Rule 17.2(a)).

* See the attached detailed Office action for a list of the certified copies not received.

14)☐ Acknowledgment is made of a claim for domestic priority under 35 U.S.C. § 119(e) (to a provisional application).

a) ☐ The translation of the foreign language provisional application has been received.

15)☐ Acknowledgment is made of a claim for domestic priority under 35 U.S.C. §§ 120 and/or 121.

Attachment(s)

1) ☐ Notice of References Cited (PTO-892)
2) ☐ Notice of Draftsperson's Patent Drawing Review (PTO-948)
3) ☐ Information Disclosure Statement(s) (PTO-1449) Paper No(s) _____ .
4) ☐ Interview Summary (PTO-413) Paper No(s). _____ .
5) ☐ Notice of Informal Patent Application (PTO-152)
6) ☐ Other: .

Google Exhibit 1002
Google v. LS Cloud Storage Technologies
IPR2023-00777, Page 134 of 280

DETAILED ACTION

1. The is a response to the amendment, filed 9/25/01.

Response to Amendment

2. The amendment, filed 9/25/01, is non-compliant with **37 CFR 1.121** and has not been entered. Applicant should refer to the **MPEP rules section (37 CFR 1.121)** for proper claims and specification amendment procedure. The amendment must be resubmitted for proper entry.

3. Applicant has **one month** to respond and resubmit a proper amendment.

4. The previous office action is relisted below.

Claim Rejections - 35 USC § 112

5. Claims 2,3 are rejected under 35 U.S.C. 112, first paragraph, as containing subject matter which was not described in the specification in such a way as to enable one skilled in the art to which it pertains, or with which it is most nearly connected, to make and/or use the invention.

As to claim 2, Applicant claims a no-access mode to which the Examiner cannot find in the specification. Accordingly, there is no support for this limitation. Therefore, one of ordinary skills in the art would not be able to make/use the invention, as claimed.

As to claim 3, Applicant claims the configuration manager comprising: software for receiving an update request; software for suspending execution of remote configuration managers; software for updating remote configuration files; and software for resuming execution of remote configuration managers. However, the Examiner cannot find support for these "software" that

make up the configuration manager, in the specification. Accordingly, there is no support for these limitation. Therefore, one of ordinary skills in the art would not be able to make/use the invention, as claimed.

Claim Rejections - 35 USC § 102

6. The following is a quotation of the appropriate paragraphs of 35 U.S.C. 102 that form the basis for the rejections under this section made in this Office action:

> A person shall be entitled to a patent unless --
>
> (e) the invention was described in a patent granted on an application for patent by another filed in the United States before the invention thereof by the applicant for patent, or on an international application by another who has fulfilled the requirements of paragraphs (1), (2), and (4) of section 371(c) of this title before the invention thereof by the applicant for patent.

7. Claims 1,4 are rejected under 35 U.S.C. 102(e) as being anticipated by Olnowich (US 6,044,438).

As to claim 1:

Olnowich discloses memory controller for controller memory accesses across networks in distributed shared memory processing systems. Olnowich discloses a data storage system comprising:

a network (Figures 1A - 2B) interconnecting a plurality of PCS each of which includes:

an I/O channel adapter for transmitting data over the channel and a network adapter for transmitting control signals and data over the network (I/O controller 52; Figure 2B);

front-end software for handling I/O requests arriving to the I/O channel adapter and the network adapter (it is inherent that Olnowich has software to control I/O requests between the I/O controller and the network adapter (Figure 2B; col 10 ln 49 - col 11 ln 62);

cache manager software for handling data stored in the cache memory of the PC, said cache memory comprises a portion of a distributed cache memory stored in the plurality of PCS interconnected by the network (memory controller 210; Figure 2) ;

back-end software for handling reads and writes to disks (process read/write requests; col 16 lns 29-39); and

a configuration manager software module for managing resources in the cache manager to ensure consistency of data stored in the distributed cache (abstract; cols 7-8).

As to claim 4:

Olnowich teaches the PCS are off-the-shelf hardware components (the computers on the network are normal off-the-shelf computer systems; Figures 1-3).

Conclusion

8. Any response to this action should be mailed to:

Commissioner of Patents and Trademarks

Washington, D.C. 20231

or faxed to:

(703) 308-9051 (for formal communications intended for entry)

or:

(703) 305-9731 (for informal or draft communications, please label "PROPOSED" or "DRAFT")

Hand-delivered responses should be brought to Crystal Park II, 2121 Crystal Drive, Arlington, VA, Sixth Floor (Receptionist).

9. Any inquiry concerning this communication or earlier communications from the examiner should be directed to Than Nguyen whose telephone number is (703) 305-3866.

10. Any inquiry of a general nature or relating to the status of this application should be directed to the Group receptionist whose telephone number is (703) 305-9700.

Than Nguyen

March 13, 2002

UNITED STATES PATENT AND TRADEMARK OFFICE

COMMISSIONER FOR PATENTS
UNITED STATES PATENT AND TRADEMARK OFFICE
WASHINGTON, D.C. 20231
www.uspto.gov

Paper No. 11

ILYA GERTNER
NETWORK DISK INC
5 GASLIGHT LANE
FRAMINGHAM, MA 01701

COPY MAILED

OCT 1 1 2001

OFFICE OF PETITIONS

In re Application of	:	
Ilya Gertner	:	
Application No. 09/236,409	:	DECISION ON PETITION
Filed: January 22, 1999	:	
Attorney Docket No. N/A	:	

This is a decision on the petition under 37 CFR 1.137(b), filed September 25, 2001, in the above-identified application.

The petition is **GRANTED**.

The above-cited application became abandoned for failure to reply in a timely manner to the non-final Office Action mailed November 20, 2000, which set a shortened statutory period for reply of three (3) months. An extension of time with the first month was obtained. No reply was received within the allowable period. Accordingly, the application became abandoned on March 21, 2001. A Notice of Abandonment was mailed on July 25, 2001.

The application file is being forwarded to Technology Center 2100 for review of the Amendment filed September 25, 2001.

Telephone inquiries concerning this decision should be directed to Kenya A. McLaughlin at (703) 305-0010.

Kenya A. McLaughlin

Kenya A. McLaughlin
Petitions Attorney
Office of Petitions
Office of the Deputy Commissioner
for Patent Examination Policy

09-26-01

LAC Gp 2751 #9

Application/Control Number: 09/236,409

OIPE JC103
SEP 25 2001
PATENT & TRADEMARK OFFICE

HONORABLE COMMISSIONER
OF PATENTS AND TRADEMARKS
Washington, D.C. 20231

September 23, , 2001

In The United States Patent and Trademark Office

Application Number: 09/236,409
Filing Date: 1999-1-22
Grp Art Unit: 2751

Applicant: Ilya Gertner
App. Title: Data Storage System Comprising a Network of PCs and Method Using Same

PETITION TO REVIVE UNINTENTIONALLY ABANDONED PATENT

Sir:

Please revive the above application. Enclosed please find a check for $620 to cover the fees for a small entity. A verified statements establishing small entity status for this application has been filed and the current owner of this application still qualifies for small entity status.

In addition, please find a revised version of the Amendment for Claims and Specifications.

Please let me know if there are any other fees or forms that I need to fill out to continue working with this application. I missed the deadline by only seven days and am anxious to proceed expediently on this matter.

Sincerely,

Ilya Gertner

Ilya Gertner
Applicant Pro Se
President of Network Disk, Inc.
5 Gaslight Lane
Framingham, MA 01701
Tel: (508) 872-4586
Cel: (508) 740-4126

09/28/2001 AWONDAF1 00000121 09236409
01 FC:241 620.00 OP

RECEIVED
SEP 28 2001
OFFICE OF PETITIONS
DEPUTY A/C PATENTS

#10

OIPE JC103
SEP 25 2001
PATENT & TRADEMARK OFFICE

HONORABLE COMMISSIONER
OF PATENTS AND TRADEMARKS
Washington, D.C. 20231

September 25, 2001

In The United States Patent and Trademark Office

Application Number: 09/236,409
Filing Date: 1999-1-22
Grp Art Unit: 2751

Applicant: Ilya Gertner
App. Title: Data Storage System Comprising a Network of PCs and Method Using Same

Amendment: CLAIMS, SPECIFICATIONS

Sir:

Please amend the above application with the new claims below.
This amendment includes:

- claims,
- changes to specifications,
- version with markings to show changes to claims,
- version with markings to show changes to specifications,
- remark, describing the rationale of new claims and answers to Examiner's concerns.

In lie of the amendment, I respectfully request for reconsideration of the Examiner's position.

Sincerely, Ilya Gertner

Ilya Gertner
Applicant Pro Se
President of Network Disk, Inc.
5 Gaslight Lane
Framingham, MA 01701
Tel: (603) 884-5014, (508) 872-4586
Cel: (508) 740-4126

RECEIVED
SEP 28 2001
OFFICE OF PETITIONS
DEPUTY A/C PATENTS

CLAIMS:

1 A data storage system comprising a network interconnecting a plurality of PCs each of which includes:

an I/O channel adapter modified to accept an incoming I/O request from a host; and

a network adapter for handling network control traffic; and

front-end software for handling I/O requests arriving at the I/O channel adapter or the network adapter; and

cache manager software for handling data stored in cash memory of the PC, said cache memory comprises a portion of a distributed cache memory stored in the plurality of PCs interconnected by the network; and

back-end software for handling reads and writes to disks; and

configuration manager software module permitting a user to specify parameters changing allocation of cache memory and algorithms.

2 The system of claim 1, wherein the configuration manager includes software that checks:

if an access mode is set to exclusive mode, and if so data storage subsystems caches both reads and writes and the data storage system sends invalidate messages to remote storage systems; and

if the access mode is set to shared, the storage system caches only reads; and

if the access mode is not set to read exclusive, nor write exclusive, nor read shared, nor write shared, the configuration manager rejects all requests directed to the data storage system.

3. The system of claim 1 wherein a host accesses remote disk comprising steps of:

   Step 1: local host issues a request over I/O channel to local data storage system,

   Step 2: configuration manager on said local storage system sends request to a remote data storage system,

   Step 3: e data storage system accesses remote disk hereby offloading said local host from network and cache management.

4. A method for assembling a data storage system of claim 1 comprising steps of:

   using off-the-shelf hardware components; and

   using off-the-shelf software components; and

   using modified I/O adapter drivers to accept incoming I/O requests from hosts; and

   using cache manager module to speed up read requests and flusher module to write modified data to disk; and

   configuration manager permitting a user to control allocation of cache resources.

CHANGES TO SPECIFICATIONS

Insert after (page 6, ln 34)

In FIG 3, front-end module 310 including I/O adapter driver has been designed to accept target SCSI I/O requests from hosts 111 and 112. Hosts 111 and 112 issue I/O requests as if it's going to a standard disk.

Insert after (page 7 ln 8)

Volume access table (450) in FIG 4 contains a mapping between hosts and volumes specifying an access mode value.

VERSION WITH MARKINGS TO SHOW CHANGES MADE IN CLAIMS

Bold Italics font is used for text in original text; Times New Roman font is used for new text that replaces the old text

1. A data storage system comprising:
a network interconnecting a plurality of PCs each of which includes:

an I/O channel adapter for transmitting data over the channel and a network adapter for transmitting control signals and data over the network;

front-end software for handling I/O requests arriving to the I/O channel adapter and the network adapter;

cache manager software for handling data stored in cash memory of the PC, said cache memory comprises a portion of a distributed cache memory stored in the plurality of PCs interconnected by the network;

back-end software for handling reads and writes to disks; and

a configuration manager software module for managing resources in the cache manager to ensure consistency of data stored in the distributed cache.

1 A data storage system comprising a network interconnecting a plurality of PCs each of which includes:

an I/O channel adapter modified to accept an incoming I/O request from a host; and

a network adapter for handling network control traffic; and

front-end software for handling I/O requests arriving at the I/O channel adapter or the network adapter; and

cache manager software for handling data stored in cash memory of the PC, said cache memory comprises a portion of a distributed cache memory stored in the plurality of PCs interconnected by the network; and

back-end software for handling reads and writes to disks; and

configuration manager software module permitting a user to specify parameters changing allocation of cache memory and algorithms.

VERSION WITH MARKINGS TO SHOW CHANGES MADE IN CLAIMS (CONTINUED)

Bold Italics font is used for text in original text; Times New Roman font is used for new text that replaces the original text

2. The system of claim 1, wherein the configuration manager includes software that checks:

if an access mode is set to exclusive mode, and if so data storage subsystems caches both reads and writes and the data storage system sends invalidate messages to remote storage systems; and

if the access mode is set to shared, the storage system caches only reads; and

if the access mode is set to no-access, the configuration manager rejects all requests directed to the data storage system.

2 The system of claim 1, wherein the configuration manager includes software that checks:

if an access mode is set to exclusive mode, and if so data storage subsystems caches both reads and writes and the data storage system sends invalidate messages to remote storage systems; and

if the access mode is set to shared, the storage system caches only reads; and

if the access mode is not set to read exclusive, nor write exclusive, nor read shared, nor write shared, the configuration manager rejects all requests directed to the data storage system.

VERSION WITH MARKINGS TO SHOW CHANGES MADE IN CLAIMS (CONTINUED)

Bold Italics font is used for text in original text; Times New Roman font is used for new text that replaces the original text

3 The system of claim 1 wherein the configuration manager comprises software for synchronizing configuration files on remote storage systems comprising the following modulars:

software for receiving a request for an update of a configuration file;

software for suspending execution of configuration managers on remote nodes;

3. The system of claim 1 wherein a host accesses remote disk comprising steps of:

Step 1: local host issues a request over I/O channel to local data storage system,

Step 2: configuration manager on said local storage system sends request to a remote data storage system,

Step 3: e data storage system accesses remote disk hereby offloading said local host from network and cache management.

4. The system of claim 1, wherein PCs are using off-the-shelf hardware components.

4. A method for assembling a data storage system of claim 1 comprising steps of:

using off-the-shelf hardware components; and

using off-the-shelf software components; and

using modified I/O adapter drivers to accept incoming I/O requests from hosts; and

using cache manager module to speed up read requests and flusher module to write modified data to disk; and

configuration manager permitting a user to control allocation of cache resources.

VERSION WITH MARKINGS TO SHOW CHANGES MADE IN SPECIFICATIONS

Bold Italics font is used for text in original text; Times New Roman font is used for new text that is inserted after the original text

(page 6, ln 30)

Detailed descriptions of the preferred embodiment are provided herein. It is to be understood, however, that the present invention may be embodied in various forms. Therefore, specific details disclosed herein are not to be interpreted as limiting

Insert after (page 6, ln 34)

In FIG 3, front-end module 310 including I/O adapter driver has been designed to accept target SCSI I/O requests from hosts 111 and 112. Hosts 111 and 112 issue I/O requests as if it's going to a standard disk.

(page 7, ln 1)

module 310 of FIG. 3 allocates a channel and waits for I/O requests from the initiating hosts 111 or 112. Remote operations begin in step 402. Depending upon the status of the value in a volume access table 450 the requests are routed though either 4A for write exclusive mode, 4B for read exclusive, 4C for write shared and 4D for read shared. Concurrently with the processing of I/O operations, independent page flusher daemon 4F scans cache memory and writes buffers to disks. Disk interrupt processing is shown in FIG 4E.

Insert after (page 7 ln 8)

Volume access table (450) in FIG 4 contains a mapping between hosts and volumes specifying an access mode value.

REMARK

This is Applicant's response to the first Office Action report. The terms Applicant is used for Ilya Gertner; Examiner is used for Than Nguyen; this application is used for application number is 09/236,409.

RESPONSE SUMMARY

Examiner has considered the election of claims: Claims 1-4 are elected. Claims 5-11 are canceled. Claims 5-11 will be selected in follow up patent application.

Examiner rejected claims 2,3 under 35 U.S.C. 112.
With regard to claim 2, Applicant has amended editorially to correct those errors noted by the Examiner. With regard to claim 3, Applicant has rewritten the claim entirely to reflect on another aspect of the invention described in this application.

Examiner rejected claims 1,4 under 35 U.S.C. 102(e) as being anticipated by Olnowich US 6,044,438.
With regard to claim 1, Applicant thanks the Examiner for pointing out that Claim 1 as originally written appears to be indistinguishable from prior art in multiprocessor systems. Applicant corrected those errors and amended Claim 1 editorially to describe a data storage system (as opposed to a multiprocessor system) that must use different methods to achieve different performance objectives.
With regard to claim 4, Applicant made editorial changes to describe a data storage system.
Applicant reviewed references cited by Olnowich and Baxter. References cited do not show this invention or render it obvious.

In lie of the corrections made to claims and minor insertions to specifications, Applicant respectfully requests Examiner to reconsider this application.

DETAILED RESPONSE

1. Applicant agrees: Claims 1-4 are elected. Claims 5-11 are canceled and will be selected in the follow up patent application.

2. Applicant agrees: IDS with claims amendment has been submitted and is considered.

3. Applicant disagrees with the rejection of Claims 2,3.

As to Claim 2, Examiner claims "a no-access"mode cannot be found in the specification Therefore, one of ordinary skills in the art would not be able to make use the invention, as claimed.

With regard to Claim2, Applicant refers the Examiner to the embodiment of the description (page 5 ln 19) Applicant illustrates in data flow diagram form the operations of a data storage system including: FIG. 4A illustrating operations in write exclusive mode, FIG 4B in read exclusive mode, FIG 4C in write shared mode, FIG 4D in read shared mode, FIG 4E in disk interrupt, FIG 4F in page flusher. In Detailed Description of the Preferred Embodiment (page 7 ln 1) local operations begin in step 401 where the corresponding front-end module 310 of FIG. 3 allocates a channel and waits for I/O requests from the initiating hosts 111 or 112. Remote operations begin in step 402. Depending upon the status of the value in a volume access table 450 the requests are routed though either 4A for write exclusive mode, 4B for read exclusive, 4C for write shared and 4D for read shared. Concurrently with the processing of I/O operations, independent page flusher daemon 4F scans cache memory and writes buffers to disks. Disk interrupt processing is shown in FIG 4E.

It is understood by those skilled in the art that if the status in the volume access table is not set to read shared, nor write shared, nor read exclusive, nor write, exclusive, the result is no-access at all. In an attempt to reach an agreement with the Examiner, Applicant agrees to make editorial changes to Claim 1, where no-access is replaced with the text,

if the access mode is not set to read exclusive, nor write exclusive, nor read shared, nor write shared, the configuration manager rejects all requests directed to the data storage system

As to rejection of Claim 3, Examiner claims cannot find support for theses "software" that make up the configuration manager in the specification.

In an attempt to reach an agreement with the Examiner, Applicant agrees to write the claim to reflect a different aspect in the invention.

In this application (page 6 ln 29) Applicant specifies.

> The cache manager software module calls routines in the configuration manager 340 to ensure consistency of the cache memory in other network attached data storage systems. At some later point in time, the back-end software module 322 invokes a page flusher module to write modified data to disks 161 and 161 and free up cache memory. The presence of fast access cache memory permits front end channels and network links to operate completely independent of the back-end physical disk devices. Because of this front-end/back-end separation, the data storage system 131 is liberated from the I/O channel and network timing dependencies.

Applicant continues (page 6 ln 35)

> The presence of fast access cache memory permits front end channels and network links to operate completely independent of the back-end physical disk devices. Because of this front-end/back-end separation, the data storage system

131 is liberated from the I/O channel and network timing dependencies. The data storage system is free to dedicate its processing resources to increase performance through more intelligent scheduling and data transfer network protocol.

According to the above cited specification, Claim 3 is:

. The system of claim 1 wherein a host accesses remote disk comprising steps of:

local host issues a request over I/O channel to local data storage system,

configuration manager on said local storage system sends request to a remote data storage system,

remote data storage system accesses remote disk hereby offloading said local host from network and cache management.

4. Applicant disagrees with the rejection of Claims 1,4 as being anticipated by Olnowich.

As to claim 1, Examiner writes Olnowich discloses a data storage system.

Applicant thanks the Examiner for pointing out that Claim 1 as is originally written appears to be similar to prior art in multiprocessor systems such as being anticipated by Olnowich. Applicant has made editorial changes to Claim 1 to specify a data storage system that uses different methods to achieve different performance objectives from those in multiprocessor systems.

In greater detail, in 6,122,659. (col- 1 ln 25) Olnowich defines the field of invention related to parallel processing systems comprised of plurality of nodes communicating via messages. In 6,044,438 (col 1 ln 25) Olnowich defines the same field of parallel processing systems comprised of plurality of nodes communicating via messages.

It is well known to those skilled in the art that parallel processing systems refer to computer systems which in greater detailed are known as hosts that implement applications for users.

It is also well known to those skilled in the art that data storage systems refer to computer systems that are connected via I/O channels to hosts. In this application 09/236,409 (page 1 ln 8) Applicant discloses a data storage system that permits independent access from local hosts connected via I/O channels. Applicant further discloses in (page 1 ln 21) the purpose of data storage systems is to improve the performance of applications running on the host computer by offloading I/O processing from the host to the data storage system.

It is well known to those skilled in the art that methods used in data storage systems are different from methods used in hosts. In multiprocessor hosts memory reference patterns are unknown therefore caching algorithms to system statistics. In contrast in data storage

systems one can streamline caching algorithm by taking advantage of application knowledge such as a remote disk on a remote PC is referenced only infrequently due to the nature of data stored there. This knowledge allows a configuration manager to streamline caching algorithms.

Continuing as to claim 1, Examiner writes Olnowich discloses a plurality of PCS in (Figure 1A-2B).

Applicant disagrees. Applicant cannot find PCS in 6,122,659 and 6,044,438. In fact, Olnowich uses terms network node, processing node.

It is well known to those skilled in the art that PCS refer to standard off-shelf computers that can be purchased in a retail store. It is also known to those skilled in the art that terms network node, processing node, I/O controller and network controller are generic terms in any computer systems. It is also well known to those skilled in the art that special purpose hardware to provide remote memory accesses across network as disclosed by Olnowich (Abstract) is not an off-shelf component found in PCS.

Continuing as to claim 1 Examiner writes front-end software for handling I/O requests arriving to the I/O channel adapter and network adapter (it is inherent that Olnowich has software to control I/O requests between the I/O controller and network adapter (Figure 2B; col 10 ln 49 – col 11 ln 62).

Applicant disagrees. Applicant cannot find the use of the term front-end software in Olnowich's disclosure. Applicant also cannot find software to control I/O request between the I/O controller and network adapater. The fact is Olnowich discloses software to control local memory and to remote memory located across network (col 11 ln 3). Olnowich discloses software to expand a physical addressing to virtual addressing and various sizes of distributed memory (col 11 ln 20). Further, Olnowich discloses I/O controller for connecting to I/O devices via I/O bus and internal I/O bus for connecting to local registers (col 10 ln 52). Olnowich is not disclosing software to control I/O requests between the I/O controller and network adapter.

Continuing as to claim 1 Examiner writes cache manager software for handling data stored in the cache memory of the PCs.

Continuing as to claim 1 Examiner writes back-end software for handlings reads and writes to disks (process read/write requests; col 16 ln 29-39);

Applicant cannot find in Olnowich the term back-end software for handling reads and writes. The fact is Olnowich discloses network adapter designed specifically to handle shared memory processor cache coherency efficiently over network (col 16 ln 29).

Continuing to claim 1, Examiner writes a configuration manager software module for managing resources in the cache manager to ensure consistency of data stored in the distributed cache.

Applicant cannot find the term configuration manager in Olnowich.
In an attempt to reach an agreement with Examiner Applicant to add a restriction to Claim 1:

1 A data storage system comprising: a network interconnecting a plurality of PCs each of which includes:

an I/O channel adapter modified to accept an incoming I/O request from a host; and

As to claim 4 Examiner writes Olnowich teaches the PCS are off-the-shelf hardware components (the computers on the network are normal off-the-shelf computer systems; Fig 1-3).

Applicant disagrees to rejection of claim 4 because Olnowich uses special-purpose hardware to improve efficiency of cache coherency (abstract). Special purpose hardware is not found in normal off-the-shelf computer systems.
In (page 4 ln 24) Applicant specifies a storage system using off-the-shelf standard components comprising a network of PCs including an I/O channel adapter and network adapter and method for managing distributed cache memory stored in the plurality of PCs interconnected by the network. The use of standard PCs reduces the cost of the data storage system. The use of the network of PCs permits building large, high-performance, data storage systems. In greater detail (page 6 ln 24) Applicant specifies standard I/O channels, network links, and configuration manager modules to ensure consistency of cache.

In an attempt to reach an agreement with Examiner, Applicant agrees to reword Claim 4:

4. A method for assembling a data storage system of Claim 1 comprising the steps of:
using off-the-shelf hardware components; and
using off-the-shelf software components; and
using modified I/O adapter drivers to accept incoming I/O requests from hosts; and
using cache manager module to speed up read requests and flusher module to write modified data to disk; and
configuration manager permitting a user to control allocation of cache resources.

5. Overview Of References Cited

Applicant reviewed Examiner's detailed action and references cited. In 6,044,438, 6122,659 Olnowich discloses a memory controller, a special-purpose hardware unit for building a multiprocessor. In 6,026,461, 5,887,146 Baxter discloses another variation for building a shared memory multiprocessor. In this response Applicant compared methods used in building a multiprocessor to methods used in building a data storage system. It is well known to those skilled in the art that multiprocessor systems refer to computer systems which in greater detail are known as hosts that implement applications for users. It is also well-known to those skilled in the art that data storage systems refer to computer system that connect via I/O channels to hosts. It is also well known to those skilled in the art that methods used in data storage systems are different from methods used in hosts. Data storage systems are used to offload I/O and network computations from host in order to improve performance of said hosts. In 5,577,226 Percival discloses methods for disk caching in an operating system used on Vax or Alpha AXP hosts. Disk caching on hosts consumes a lot of memory differently from a data storage system that completely offloads I/O and networking computations from a host.

6. Conclusions

The specification has been amended editorially and to correct those errors noted by Examiner and Draft's person. Examiner noticed lack of definition for "no-access" mode. In the addendum to specifications, Applicant more specifically defined configuration manager, volume access table and values stored herein. Claim 1 has been further limited by adding restrictions on channel adapters. Claims 2 and 4 have been modified to correct errors and further limit said claims. Claim 3 has been rewritten to more particularly define the invention in a patentable manner over the cited prior art.

In lie of corrections made in Amendment to claims and minor insertions to specifications, Applicant respectfully requests to reconsider rejection of claims.

Sincerely,

Ilya Gertner
Applicant Pro Se
President of Network Disk, Inc.
5 Gaslight Lane
Framingham, MA 01701
Tel: (603) 884-5014, (508) 872-4586
Cel: (508) 740-4126

UNITED STATES DEPARTMENT OF COMMERCE
Patent and Trademark Office

Address: COMMISSIONER OF PATENTS AND TRADEMARKS
Washington, D.C. 20231

SERIAL NUMBER	FILING DATE	FIRST NAMED APPLICANT	ATTORNEY DOCKET NO.
09/236,409	01/22/99	GERTNER	I

TM02/0725

ILYA GERTNER
NETWORK DISK INC
5 GASLIGHT LANE
FRAMINGHAM MA 01701

EXAMINER	
NGUYEN, T	
ART UNIT	PAPER NUMBER
2187	8

DATE MAILED: 07/25/01

NOTICE OF ABANDONMENT

This application is abandoned in view of:

1. ☐ Applicant's failure to respond to the Office letter, mailed _____.
2. ☐ Applicant's letter of express abandonment which is in compliance with 37 C.F.R. 1.138.
3. ☒ Applicant's failure to timely file the response received 5/29/01 within the period set in the Office letter.
4. ☐ Applicant's failure to pay the required issue fee within the statutory period of 3 months from the mailing date of _____ of the Notice of Allowance.
   - ☐ The issue fee was received on _____.
   - ☐ The issue fee has not been received in Allowed Files Branch as of _____.

   In accordance with 35 U.S.C. 151, and under the provisions of 37 C.F.R. 1.316(b), applicant(s) may petition the Commissioner to accept the delayed payment of the issue fee if the delay in payment was unavoidable. The petition must be accompanied by the issue fee, unless it has been previously submitted, in the amount specified by 37 C.F.R. 1.17(l), and a verified showing as to the causes of the delay.

   If applicant(s) never received the Notice of Allowance, a petition for a new Notice of Allowance and withdrawal of the holding of abandonment may be appropriate in view of Delgar Inc. v. Schuyler, 172 U.S.P.Q. 513.
5. ☐ Applicant's failure to timely correct the drawings and/or submit new or substitute formal drawings by _____ as required in the last Office action.
   - ☐ The corrected and/or substitute drawings were received on _____.
6. ☐ The reason(s) below.

The maximum response date for the 11/20/00 office action is 5/21/01 (with 3 months extension) of time. The Applicant's response is dated 5/29/01, which is passed the maximum allowable statutory period. It should be noted that the Amendment submitted is Non Compliant according to 37 CFR 1.121 (Need marked up copy of paragraph + amended claims) and it need to request extension of time w fees.

Than Nguyen
7/16/01

Google Exhibit 1002
Google v. LS Cloud Storage Technologies
IPR2023-00777, Page 156 of 280

PTO-1432 (Rev. 4/93)

UNITED STATES DEPARTMENT OF COMMERCE
Patent and Trademark Office
Address: COMMISSIONER OF PATENTS
Washington, D.C. 20231

APPLICATION NO.	FILING DATE	FIRST NAMED INVENTOR	ATTORNEY DOCKET NO.

EXAMINER

ART UNIT	PAPER NUMBER
	9

DATE MAILED:

Notice of Non-Compliant Amendment (37 CFR 1.121)

The amendment filed on 5-29-01 is considered non-compliant because it has not been submitted in the format required under **37 CFR 1.121**, as amended on September 8, 2000 (see 65 Fed. Reg. 54603, Sept. 8, 2000 and 1238 O.G. 77, Sept. 19, 2000).

☐ The amendment does not include a clean version of the **replacement paragraph/section**. 37 CFR 1.121(b)(1)(ii)

☒ The amendment does not include a marked-up version of the **replacement paragraph/section** 37 CFR 1.121(b)(1)(iii)

☐ The amendment does not include a clean version of the **amended claim(s)**. 37 CFR 1.121(c)(1)(i)

☒ The amendment does not include a marked-up version of the **amended claim(s)**. 37 CFR 1.121(c)(1)(ii)

For your convenience, attached to this correspondence is a copy of an informational flyer (MPEP Bookmark Bulletin on "Simplified Amendment Practice").

Applicant is given a TIME PERIOD of **ONE (1) MONTH** or **THIRTY (30) DAYS** from the mailing date of this notice, whichever is longer, within which to submit an amendment in compliance with 37 CFR 1.121, effective March 1, 2001, in order to avoid abandonment. EXTENSIONS OF THIS TIME PERIOD MAY BE GRANTED UNDER 37 C.F.R. 1.136(a).

Otealia Coles
Legal Instruments Examiner

Received
MAY 3 0 2001
Technology Center 2100

HONORABLE COMMISSIONER
OF PATENTS AND TRADEMARKS
Washington, D.C. 20231

Received
MAY 3 0 2001
Technology Center 2100

May 29, 2001

In The United States Patent and Trademark Office

Application Number: 09/236,409
Filing Date: 1999-1-22
Grp Art Unit: ~~2751~~ 2187

Applicant: Ilya Gertner
App. Title: Data Storage System Comprising a Network of PCs and Method Using Same

Amendment: CLAIMS, SPECIFICATIONS, DRAWINGS

Sir:

Please amend the above application with the new claims below. Please let me know if I need to make an additional payment to the UPO to cover additional time needed to file the response.

CLAIMS:

1 A data storage system comprising a network interconnecting a plurality of PCs each of which includes:

an I/O channel adapter modified to accept an incoming I/O request from a host to a PC using configuration manager software to decide whether to route said request to cache, or disk, or whether to reject said request; and

a network adapter for handling network control traffic including modified software to accept a remote I/O request using configuration manager software to decide whether to route said request to cache, or disk, or whether to reject said request; and

front-end software for handling I/O requests arriving at the I/O channel adapter or the network adapter; and

cache manager software for handling data stored in cash memory of the PC, said cache memory comprises a portion of a distributed cache memory stored in the plurality of PCs interconnected by the network; and

configuration manager software module permitting a user to specify external parameters changing allocation of cache memory and algortihms.

2 The system of claim 1, wherein the configuration manager includes software that checks:

if an access mode is set to exclusive mode, and if so data storage subsystems caches both reads and writes and the data storage system sends invalidate messages to remote storage systems; and

if the access mode is set to shared, the storage system caches only reads; and

if the access mode is set to no-access, the configuration manager rejects all requests directed to the data storage system; and

if the access mode is set to no-cache, the configuration manager provides direct access to disk without using cache resources and without creating cache coherency traffic.

3. The system of claim 1 wherein a host accesses a remote disk without incurring network overhead on said host comprising steps of:

Step 1: local host issues a request over I/O channel to a local PC; and

Step 2: configuration manager on said local PC routes said request to a remote PC via network; and

Step 3: remote PC accesses remote disk, and returns data to said local PC; and

Step 4: said local PC returns data to said local hosts via said I/O channel; and

Step 5: configuration manager maintains consistency of data stored in local and remote PCs.

4. A method for assembling a data storage system of claim 1 comprising steps of:

using off-the-shelf hardware components; and

using off-the-shelf software components; and

using modified I/O adapter drivers to accept incoming I/O requests from hosts; and

using cache manager module to speed up read requests and flusher module to write modified data to disk; and

configuration manager permitting a user to explicitly control allocation of cache resources.

AMENDMENT TO SPECIFICATIONS

Insert after (page 6, ln 34)

In FIG 3, front-end module 310 including I/O adapter driver has been modified to accept target SCSI I/O requests from hosts 111 and 112. Said front-end module handles I/O requests in such a manner wherein hosts 111 and 112 are not aware of a data storage system. Hosts 111 and 112 issue I/O requests as if it's going to a standard disk.

Insert after (page 7 ln 8)

Volume access table (450) in FIG 4 contains a mapping between hosts and volumes specifying an access mode value including but not limited to exclusive, shared, no-access, and no-cache. Modules 401 and 402 use said access mode to branch accordingly. If an access mode is set to no-access, configuration manager rejects all requests, if an access mode set to no-cache, configuration manager bypasses cache manager and routes I/O requests directly to disk.

A user of a data storage system can externally set the values of the access mode for each host and volume pair. For some applications, where data on a remote volume is accessed infrequently, the user may want to specify no-cache for said volume to streamline cache operation. By disabling caching. the user has entirely eliminated cache coherency traffic for said volume.

In another embodiment of this application in FIG 5, Applicant illustrates yet another application of the volume access table including a translation module for a given host to volume mapping. The translation module is a dynamically loadable library that can be changed, compiled and linked at run-time. Applicant further specifies the translation module in (page 10 ln 12).

APPLICANTS RESPONSE TO DETAILED ACTION

This is Applicant's response to Detailed Action report. The sections below are numbered to match appropriated Sections in the Detailed Action. The terms Applicant is used for Ilya Gertner; Examiner is used for Than Nguyen; this application is used for application number is 09/236,409.

1. Applicant agrees: Claims 1-4 are elected. Claims 5-11 are canceled and will be selected in the follow up patent application.

2. Applicant agrees: IDS with claims amendment has been submitted and is considered.

3. Applicant disagrees with the rejection of Claims 2,3.

As to claim 2, Examiner claims "a no-access"mode cannot be found in the specification Therefore, one of ordinary skills in the art would not be able to make use the invention, as claimed.

Applicant added wording no-access in the Addendum to specifications above. A more detailed description in the embodiment of the description (page 5 ln 19) Applicant illustrates in data flow diagram form the operations of a data storage system including: FIG. 4A illustrating operations in write exclusive mode, FIG 4B in read exclusive mode, FIG 4C in write shared mode, FIG 4D in read shared mode, FIG 4E in disk interrupt, FIG 4F in page flusher. In Detailed Description of the Preferred Embodiment (page 7 ln 1) local operations begin in step 401 where the corresponding front-end module 310 of FIG. 3 allocates a channel and waits for I/O requests from the initiating hosts 111 or 112. Remote operations begin in step 402. Depending upon the status of the value in a volume access table 450 the requests are routed though either 4A for write exclusive mode, 4B for read exclusive, 4C for write shared and 4D for read shared. Concurrently with the processing of I/O operations, independent page flusher daemon 4F scans cache memory and writes buffers to disks. Disk interrupt processing is shown in FIG 4E.

As to rejection of Claim 3, Examiner claims cannot find support for theses "software" that make up the configuration manager in the specification.

In this application (page 6 ln 29) Applicant specifies.

> The cache manager software module calls routines in the configuration manager 340 to ensure consistency of the cache memory in other network attached data storage systems. At some later point in time, the back-end software module 322 invokes a page flusher module to write modified data to disks 161 and 161 and free up cache memory. The presence of fast access cache memory permits front end channels and network links to operate completely independent of the back-end physical disk devices. Because of this front-end/back-end separation, the data storage system 131 is liberated from the I/O channel and network timing dependencies.

Applicant continues (page 6 ln 35)

> The presence of fast access cache memory permits front end channels and network links to operate completely independent of the back-end physical disk devices. Because of this front-end/back-end separation, the data storage system 131 is liberated from the I/O channel and network timing dependencies. The data storage system is free to dedicate its processing resources to increase performance through more intelligent scheduling and data transfer network protocol.

In attempt to reach an agreement with Examiner, Applicant agrees to reword claim 3.

3. The system of claim 1 wherein a host accesses remote disk comprising steps of:

local host issues a request over I/O channel to local data storage system,

configuration manager on said local storage system routes request to a remote data storage system,

remote data storage system accesses remote disk hereby offloading said host from network and cache management.

4. Applicant disagrees with the rejection of Claims 1,4 as being anticipated by Olnowich.

As to claim 1, Examiner writes Olnowich discloses a data storage system.

Applicant disagrees. In 6,122,659. (col- 1 ln 25) Olnowich defines the field of invention related to parallel processing systems comprised of plurality of nodes communicating via messages. In 6,044,438 (col 1 ln 25) Olnowich defines the same field of parallel processing systems comprised of plurality of nodes communicating via messages.

It is well known to those skilled in the art that parallel processing systems refer to computer systems which in greater detailed are known as hosts that implement applications for users.

It is also well known to those skilled in the art that data storage systems refer to computer systems that are connected via I/O channels to hosts. In this application 09/236,409 (page 1 ln 8) Applicant discloses a data storage system that permits independent access from local hosts connected via I/O channels. Applicant further discloses in (page 1 ln 21) the purpose of data storage systems is to improve the performance of applications running on the host computer by offloading I/O processing from the host to the data storage system.

It is well known to those skilled in the art that methods used in data storage systems are different from methods used in hosts. In multiprocessor hosts memory reference patterns are unknown therefore caching algorithms to system statistics. In contrast in data storage systems one can streamline caching algorithm by taking advantage of application knowledge such as a remote disk on a remote PC isreferenced only infrequently due to the nature of data stored there. This knowledge allows a configuration manager to streamline caching algorithms.

Continuing as to claim 1, Examiner writes Olnowich discloses a plurality of PCS in (Figure 1A-2B).

Applicant disagrees. Applicant cannot find PCS in 6,122,659 and 6,044,438. In fact, Olnowich uses terms network node, processing node.

It is well known to those skilled in the art that PCS refer to standard off-shelf computers that can be purchased in a retail store. It is also known to those skilled in the art that terms network node, processing node, I/O controller and network controller are generic terms in any computer systems. It is also well known to those skilled in the art that

special purpose hardware to provide remote memory accesses across network as disclosed by Olnowich (Abstract) is not an off-shelf component found in PCS.

Continuing as to claim 1 Examiner writes front-end software for handling I/O requests arriving to the I/O channel adapter and network adapter (it is inherent that Olnowich has software to control I/O requests between the I/O controller and network adapter (Figure 2B; col 10 ln 49 – col 11 ln 62).

Applicant disagrees. Applicant cannot find the use of the term front-end software in Olnowich's disclosure. Applicant also cannot find software to control I/O request between the I/O controller and network adapater. The fact is Olnowich discloses software to control local memory and to remote memory located across network (col 11 ln 3). Olnowich discloses software to expand a physical addressing to virtual addressing and various sizes of distributed memory (col 11 ln 20). Further, Olnowich discloses I/O controller for connecting to I/O devices via I/O bus and internal I/O bus for connecting to local registers (col 10 ln 52). Olnowich is not disclosing software to control I/O requests between the I/O controller and network adapter.

Continuing as to claim 1 Examiner writes cache manager software for handling data stored in the cache memory of the PCs.

Continuing as to claim 1 Examiner writes back-end software for handlings reads and writes to disks (process read/write requests; col 16 ln 29-39);

Applicant cannot find in Olnowich the term back-end software for handling reads and writes. The fact is Olnowich discloses network adapter designed specifically to handle shared memory processor cache coherency efficiently over network (col 16 ln 29).

Continuing to claim 1, Examiner writes a configuration manager software module for managing resources in the cache manager to ensure consistency of data stored in the distributed cache.

Applicant cannot find the term configuration manager in Olnowich.
In an attempt to reach an agreement with Examiner Applicant to add a restriction to Claim 1:

> 1 A data storage system comprising: a network interconnecting a plurality of PCs each of which includes:
>
> a channel for connecting PC to a host.

As to claim 4 Examiner writes Olnowich teaches the PCS are off-the-shelf hardware components (the computers on the network are normal off-the-shelf computer systems; Fig 1-3).

Applicant disagrees to rejection of claim 4 because Olnowich uses special-purpose hardware to improve efficiency of cache coherency (abstract). Special purpose hardware is not found in normal off-the-shelf computer systems.
In (page 4 ln 24) Applicant specifies a storage system using off-the-shelf standard components comprising a network of PCs including an I/O channel adapter and network adapter and method for managing distributed cache memory stored in the plurality of PCs interconnected by the network. The use of standard PCs reduces the cost of the data storage system. The use of the network of PCs permits building large, high-performance, data storage systems. In greater detail (page 6 ln 24) Applicant specifies standard I/O channels, network links, and configuration manager modules to ensure consistency of cache.

In an attempt to reach an agreement with Examiner, Applicant agrees to reword Claim 4:

4. A method for assembling a data storage system of Claim 1 comprising the steps of:
   using off-the-shelf hardware components;
   using off-the-shelf software components; and
   configuration manager for managing configuration files.

5. Overview Of References Cited

Applicant reviewed Examiner's detailed action and references cited. In 6,044,438, 6122,659 Olnowich discloses a memory controller, a special-purpose hardware unit for building a multiprocessor. In 6,026,461, 5,887,146 Baxter discloses another variation for building a shared memory multiprocessor. In this response Applicant compared methods used in building a multiprocessor to methods used in building a data storage system. It is well known to those skilled in the art that multiprocessor systems refer to computer systems which in greater detail are known as hosts that implement applications for users. It is also well-known to those skilled in the art that data storage systems refer to computer system that connect via I/O channels to hosts. It is also well known to those skilled in the art that methods used in data storage systems are different from methods used in hosts. Data storage systems are used to offload I/O and network computations from host in order to improve performance of said hosts. In 5,577,226 Percival discloses methods for disk caching in an operating system used on Vax or Alpha AXP hosts. Disk caching on hosts consumes a lot of memory differently from a data storage system that completely offloads I/O and networking computations from a host.

6. Summary

The specification has been amended editorially and to correct those errors noted by Examiner and Draft's person. Examiner noticed lack of definition for "no-access" mode. In the addendum to specifications, Applicant more specifically defined configuration manager, volume access table and values stored herein. Claim 1 has been further limited by adding restrictions on channel adapters. Claims 2 and 4 have been modified to correct errors and further limit said claims. Claim 3 has been rewritten to more particularly define the invention in a patentable manner over the cited prior art.

Draft person noted incorrect margins and inconsistent lines and letters. In this enclosure Applicant corrected margins in Figures 1, 4A and 5 as well as corrected the thickness of lines and letters in Figures 1-5. Figure 4 has been further adjusted in 450 to specify n-access and no-cache.

Sincerely,

Ilya Gertner
Applicant Pro Se
President of Network Disk, Inc.
5 Gaslight Lane
Framingham, MA 01701
Tel: (603) 884-5014, (508) 872-4586
Cel: (508) 740-4126

DocCode - SCORE

SCORE Placeholder Sheet for IFW Content

Application Number: 09236409 Document Date: 05/29/2001

The presence of this form in the IFW record indicates that the following document type was received in electronic format on the date identified above. This content is stored in the SCORE database.

Since this was an electronic submission, there is no physical artifact folder, no artifact folder is recorded in PALM, and no paper documents or physical media exist. The TIFF images in the IFW record were created from the original documents that are stored in SCORE.

- Drawing

At the time of document entry (noted above):

- USPTO employees may access SCORE content via DAV or via the SCORE web page.
- External customers may access SCORE content via PAIR using the Supplemental Content tab.

05-30-01

2751
2185

PATENT & TRADEMARK OFFICE
MAY 29 2001
OIPE JC11

HONORABLE COMMISSIONER
OF PATENTS AND TRADEMARKS
Washington, D.C. 20231

In The United States Patent and Trademark Office

RECEIVED
JUN 1 2001
Technology Center 2100

Application Number: 09/236,409
Filing Date: 1999-1-22
Grp Art Unit: 2751

Applicant: Ilya Gertner
App. Title: Data Storage System Comprising a Network of PCs and Method Using Same

Amendment: CLAIMS, SPECIFICATIONS, DRAWINGS

Sir:

Please amend the above application with the new claims below. Please let me know if I need to make an additional payment to the UPO to cover additional time needed to file the response.

CLAIMS:

1 A data storage system comprising:
a network interconnecting a plurality of PCs each of which includes:

an I/O channel for connecting PC to a host,

an I/O channel adapter for transmitting data over the channel and a network adapter for transmitting control signals over the network;

front-end software for handling I/O requests arriving to the I/O channel adapter and the network adapter;

cache manager software for handling data stored in cash memory of the PC, said cache memory comprises a portion of a distributed cache memory stored in the plurality of PCs interconnected by the network;

back-end software for handling reads and writes to disks; and

configuration manager software module permitting a user to specify external parameters changing allocation of cache memory in said PCs.

2 The system of claim 1, wherein the configuration manager includes software that checks:

if an access mode is set to exclusive mode, and if so data storage subsystems caches both reads and writes and the data storage system sends invalidate messages to remote storage systems; and

if the access mode is set to shared, the storage system caches only reads; and

if the access mode is set to no-access, the configuration manager rejects all requests directed to the data storage system, and

if the access mode is set to no-cache, the configuration manager provides direct access to disk without using cache resources and without creating cache coherency traffic.

3. The system of claim 1 wherein a host accesses a remote disk without incurring network overhead on said host comprising steps of:

Step 1: local host issues a request over I/O channel to a local PC,

Step 2: configuration manager on said local storage system routes said request to a remote PC via network, and

Step 3: remote PC accesses remote disk, and returns data to said local PC, and

Step 4: said local PC returns data to said local host via said I/O channel, and

Step 5: configuration manager maintains consistency of data stored in local and remote PCs.

4. A method for assembling a data storage system of claim 1 comprising steps of:

using off-the-shelf hardware components;

using off-the-shelf software components;

using software modules including cache-manager module to speed up read requests and flusher module to write modified data to disk, and

configuration manager permitting a user to explicitly control allocation of cache resources.

AMENDMENT TO SPECIFICATIONS

Insert after (page 7 ln 8)

Volume access table (450) in FIG 4 contains a mapping between hosts and volumes specifying an access mode value including but not limited to exclusive, shared, no-access, and no-cache. Modules 401 and 402 use said access mode to branch accordingly. If an access mode is set to no-access, configuration manager rejects all requests, if an access mode set to no-cache, configuration manager bypasses cache manager and routes I/O requests directly to disk.

A user of a data storage system can externally set the values of the access mode for each host and volume pair. For some applications, where data on a remote volume is accessed infrequently, the user may want to specify no-cache for said volume to streamline cache operation. By disabling cache for a host and volume pair, . the user has entirely eliminated cache coherency traffic for said volume.

In another embodiment of this application in FIG 5, Applicant illustrates yet another application of the volume access table including a translation module for a given host to volume mapping. The translation module is a dynamically loadable library that can be changed, compiled and linked at run-time. Applicant further specifies the translation module in (page 10 ln 12).

APPLICANTS RESPONSE TO DETAILED ACTION

This is Applicant's response to Detailed Action report. The sections below are numbered to match appropriated Sections in the Detailed Action. The terms Applicant is used for Ilya Gertner; Examiner is used for Than Nguyen; this application is used for application number is 09/236,409.

1. Applicant agrees: Claims 1-4 are elected. Claims 5-11 are canceled and will be selected in the follow up patent application.

2. Applicant agrees: IDS with claims amendment has been submitted and is considered.

3. Applicant disagrees with the rejection of Claims 2,3.

As to claim 2, Examiner claims "a no-access"mode cannot be found in the specification Therefore, one of ordinary skills in the art would not be able to make use the invention, as claimed.

Applicant added wording no-access in the Addendum to specifications above. A more detailed description inthe embodiment of the description (page 5 ln 19) Applicant illustrates in data flow diagram form the operations of a data storage system including: FIG. 4A illustrating operations in write exclusive mode, FIG 4B in read exclusive mode, FIG 4C in write shared mode, FIG 4D in read shared mode, FIG 4E in disk interrupt, FIG

FIG. 4A illustrating operations in write exclusive mode, FIG 4B in read exclusive mode, FIG 4C in write shared mode, FIG 4D in read shared mode, FIG 4E in disk interrupt, FIG 4F in page flusher. In Detailed Description of the Preferred Embodiment (page 7 ln 1) local operations begin in step 401 where the corresponding front-end module 310 of FIG. 3 allocates a channel and waits for I/O requests from the initiating hosts 111 or 112. Remote operations begin in step 402. Depending upon the status of the value in a volume access table 450 the requests are routed though either 4A for write exclusive mode, 4B for read exclusive, 4C for write shared and 4D for read shared. Concurrently with the processing of I/O operations, independent page flusher daemon 4F scans cache memory and writes buffers to disks. Disk interrupt processing is shown in FIG 4E.

As to rejection of Claim 3, Examiner claims cannot find support for theses "software" that make up the configuration manager in the specification.

In this application (page 6 ln 29) Applicant specifies.

> The cache manager software module calls routines in the configuration manager 340 to ensure consistency of the cache memory in other network attached data storage systems. At some later point in time, the back-end software module 322 invokes a page flusher module to write modified data to disks 161 and 161 and free up cache memory. The presence of fast access cache memory permits front end channels and network links to operate completely independent of the back-end physical disk devices. Because of this front-end/back-end separation, the data storage system 131 is liberated from the I/O channel and network timing dependencies.

Applicant continues (page 6 ln 35)

> The presence of fast access cache memory permits front end channels and network links to operate completely independent of the back-end physical disk devices. Because of this front-end/back-end separation, the data storage system 131 is liberated from the I/O channel and network timing dependencies. The data storage system is free to dedicate its processing resources to increase performance through more intelligent scheduling and data transfer network protocol.

In attempt to reach an agreement with Examiner, Applicant agrees to reword claim 3.

3. The system of claim 1 wherein a host accesses remote disk comprising steps of:

> local host issues a request over I/O channel to local data storage system,
>
> configuration manager on said local storage system routes request to a remote data storage system,
>
> remote data storage system accesses remote disk hereby offloading said host from network and cache management.

4. Applicant disagrees with the rejection of Claims 1,4 as being anticipated by Olnowich.

As to claim 1, Examiner writes Olnowich discloses a data storage system.

Applicant disagrees. In 6,122,659. (col- 1 ln 25) Olnowich defines the field of invention related to parallel processing systems comprised of plurality of nodes communicating via messages. In 6,044,438 (col 1 ln 25) Olnowich defines the same field of parallel processing systems comprised of plurality of nodes communicating via messages.

It is well known to those skilled in the art that parallel processing systems refer to computer systems which in greater detailed are known as hosts that implement applications for users.

It is also well known to those skilled in the art that data storage systems refer to computer systems that are connected via I/O channels to hosts. In this application 09/236,409 (page 1 ln 8) Applicant discloses a data storage system that permits independent access from local hosts connected via I/O channels. Applicant further discloses in (page 1 ln 21) the purpose of data storage systems is to improve the performance of applications running on the host computer by offloading I/O processing from the host to the data storage system.

It is well known to those skilled in the art that methods used in data storage systems are different from methods used in hosts. In multiprocessor hosts memory reference patterns are unknown therefore caching algorithms to system statistics. In contrast in data storage systems one can streamline caching algorithm by taking advantage of application knowledge such as a remote disk on a remote PC isreferenced only infrequently due to the nature of data stored there. This knowledge allows a configuration manager to streamline caching algorithms.

Continuing as to claim 1, Examiner writes Olnowich discloses a plurality of PCS in (Figure 1A-2B).

Applicant disagrees. Applicant cannot find PCS in 6,122,659 and 6,044,438. In fact, Olnowich uses terms network node, processing node.

It is well known to those skilled in the art that PCS refer to standard off-shelf computers that can be purchased in a retail store. It is also known to those skilled in the art that terms network node, processing node, I/O controller and network controller are generic terms in any computer systems. It is also well known to those skilled in the art that special purpose hardware to provide remote memory accesses across network as disclosed by Olnowich (Abstract) is not an off-shelf component found in PCS.

Continuing as to claim 1 Examiner writes front-end software for handling I/O requests arriving to the I/O channel adapter and network adapter (it is inherent that Olnowich has software to control I/O requests between the I/O controller and network adapter (Figure 2B; col 10 ln 49 – col 11 ln 62).

Applicant disagrees. Applicant cannot find the use of the term front-end software in Olnowich's disclosure. Applicant also cannot find software to control I/O request between the I/O controller and network adapater. The fact is Olnowich discloses software to control local memory and to remote memory located across network (col 11 ln 3). Olnowich discloses software to expand a physical addressing to virtual addressing and various sizes of distributed memory (col 11 ln 20). Further, Olnowich discloses I/O controller for connecting to I/O devices via I/O bus and internal I/O bus for connecting to local registers (col 10 ln 52). Olnowich is not disclosing software to control I/O requests between the I/O controller and network adapter.

Continuing as to claim 1 Examiner writes cache manager software for handling data stored in the cache memory of the PCs.

Continuing as to claim 1 Examiner writes back-end software for handlings reads and writes to disks (process read/write requests; col 16 ln 29-39);

Applicant cannot find in Olnowich the term back-end software for handling reads and writes. The fact is Olnowich discloses network adapter designed specifically to handle shared memory processor cache coherency efficiently over network (col 16 ln 29).

Continuing to claim 1, Examiner writes a configuration manager software module for managing resources in the cache manager to ensure consistency of data stored in the distributed cache.

Applicant cannot find the term configuration manager in Olnowich.
In an attempt to reach an agreement with Examiner Applicant to add a restriction to Claim 1:

> 1 A data storage system comprising: a network interconnecting a plurality of PCs each of which includes:
>
> a channel for connecting PC to a host.

As to claim 4 Examiner writes Olnowich teaches the PCS are off-the-shelf hardware components (the computers on the network are normal off-the-shelf computer systems; Fig 1-3).

Applicant disagrees to rejection of claim 4 because Olnowich uses special-purpose hardware to improve efficiency of cache coherency (abstract). Special purpose hardware is not found in normal off-the-shelf computer systems.
In (page 4 ln 24) Applicant specifies a storage system using off-the-shelf standard components comprising a network of PCs including an I/O channel adapter and network adapter and method for managing distributed cache memory stored in the plurality of PCs interconnected by the network. The use of standard PCs reduces the cost of the data storage system. The use of the network of PCs permits building large, high-performance,

data storage systems. In greater detail (page 6 ln 24) Applicant specifies standard I/O channels, network links, and configuration manager modules to ensure consistency of cache.

In an attempt to reach an agreement with Examiner, Applicant agrees to reword Claim 4:

4. A method for assembling a data storage system of Claim 1 comprising the steps of:
   using off-the-shelf hardware components;
   using off-the-shelf software components; and
   configuration manager for managing configuration files.

5. Overview Of References Cited

Applicant reviewed Examiner's detailed action and references cited. In 6,044,438, 6122,659 Olnowich discloses a memory controller, a special-purpose hardware unit for building a multiprocessor. In 6,026,461, 5,887,146 Baxter discloses another variation for building a shared memory multiprocessor. In this response Applicant compared methods used in building a multiprocessor to methods used in building a data storage system. It is well known to those skilled in the art that multiprocessor systems refer to computer systems which in greater detail are known as hosts that implement applications for users. It is also well-known to those skilled in the art that data storage systems refer to computer system that connect via I/O channels to hosts. It is also well known to those skilled in the art that methods used in data storage systems are different from methods used in hosts. Data storage systems are used to offload I/O and network computations from host in order to improve performance of said hosts. In 5,577,226 Percival discloses methods for disk caching in an operating system used on Vax or Alpha AXP hosts. Disk caching on hosts consumes a lot of memory differently from a data storage system that completely offloads I/O and networking computations from a host.

6. Summary

The specification has been amended editorially and to correct those errors noted by Examiner and Draft's person. Examiner noticed lack of definition for "no-access" mode. In the addendum to specifications, Applicant more specifically defined configuration manager, volume access table and values stored herein. Claim 1 has been further limited by adding a restriction, an I/O channel for connecting PC to a host. Claims 2 and 4 have been modified to correct errors and further limit said claims. Claim 3 has been rewritten to more particularly define the invention in a patentable manner over the cited prior art.

Draft person noted incorrect margins and inconsistent lines and letters. In this enclosure Applicant corrected margins in Figures 1, 4A and 5 as well as corrected the thickness of lines and letters in Figures 1-5. Figure 4 has been further adjusted in 450 to specify n-access and no-cache.

Ilya Gertner

Sincerely,

Ilya Gertner
Applicant Pro Se
President of Network Disk, Inc.
5 Gaslight Lane
Framingham, MA 01701
Tel: (603) 884-5014, (508) 872-4586
Cel: (508) 740-4126

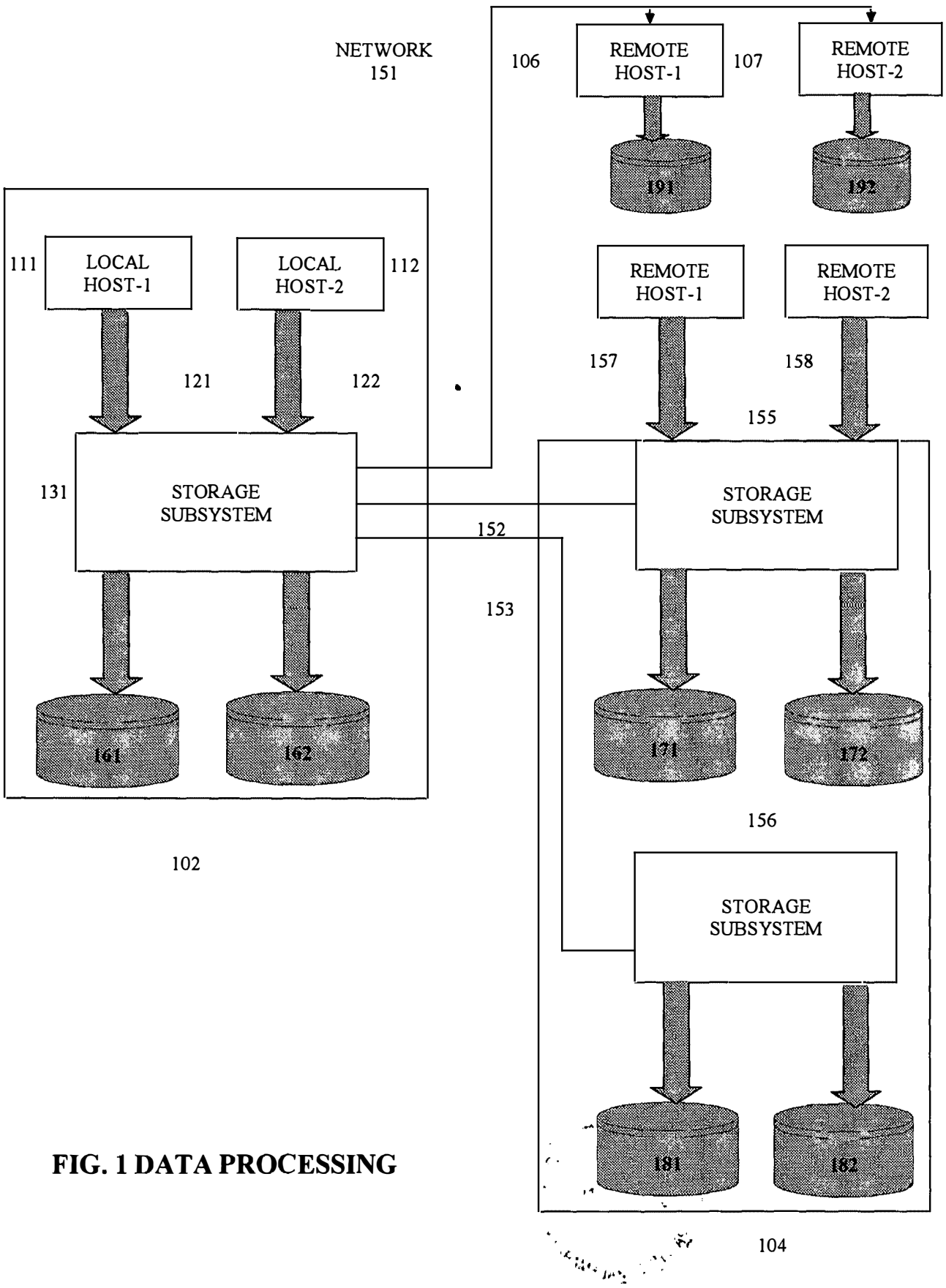

FIG. 1 DATA PROCESSING

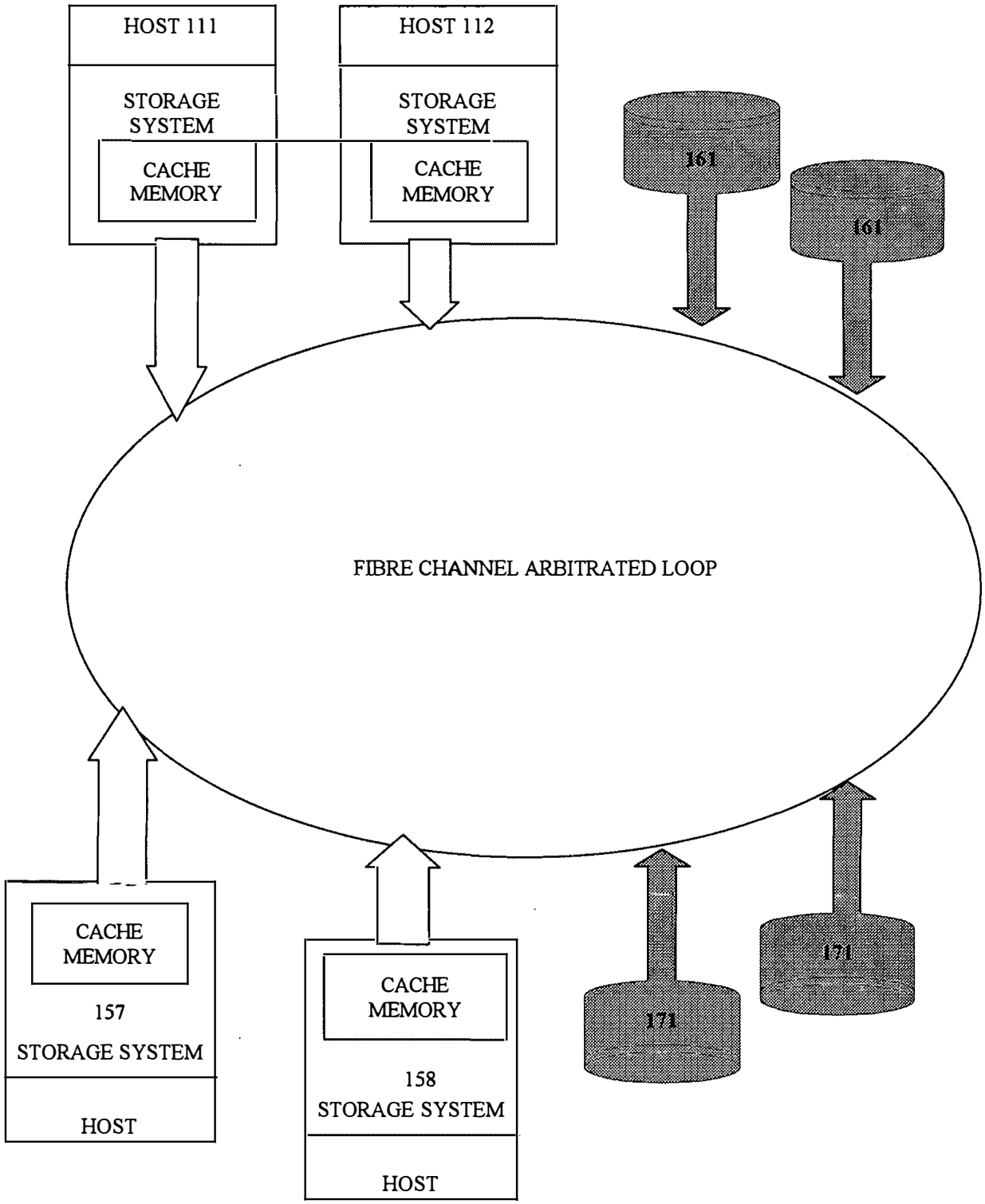

FIG. 2 FIBRE CHANNEL ARBITRATED LOOP FOR (FCAL)

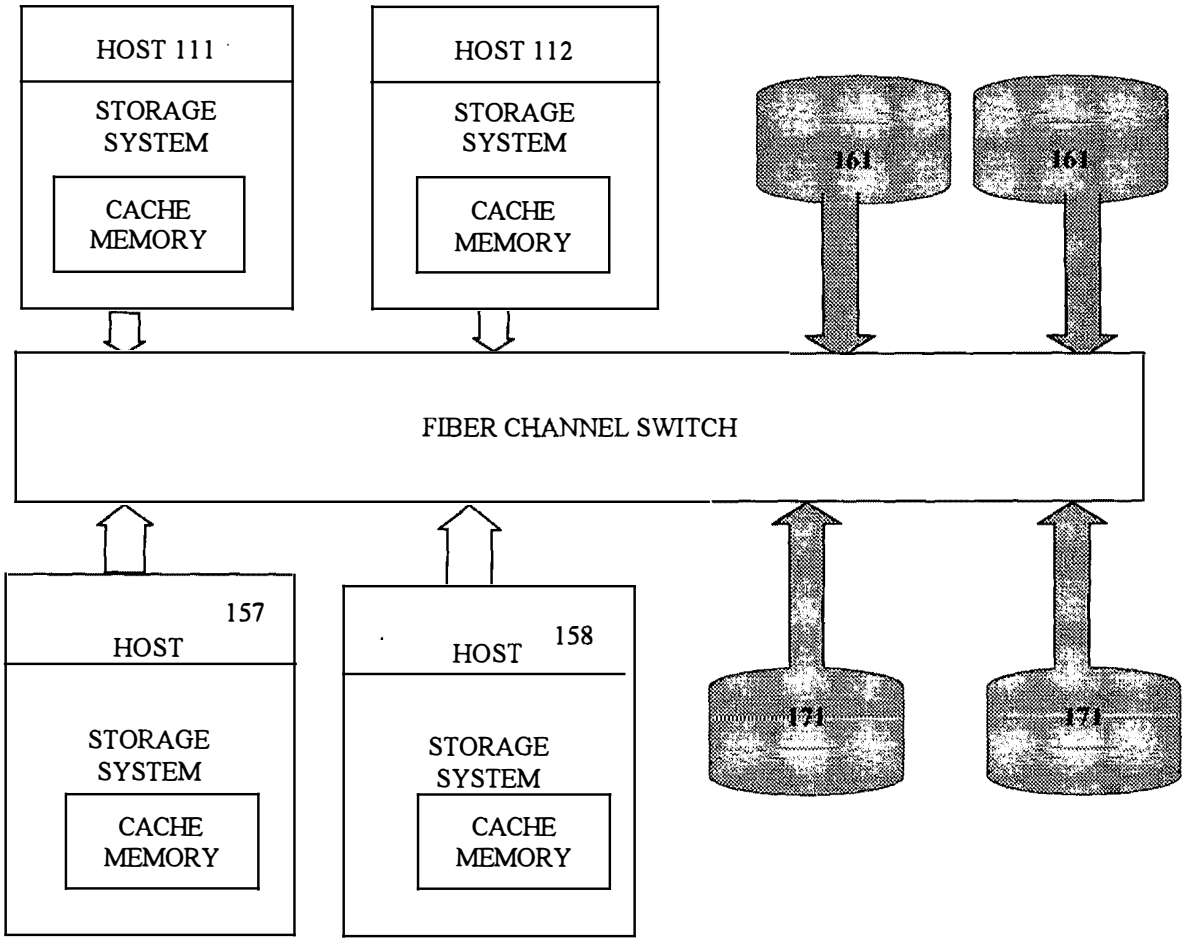

FIG. 2A FIBER CHANNEL SWITCH

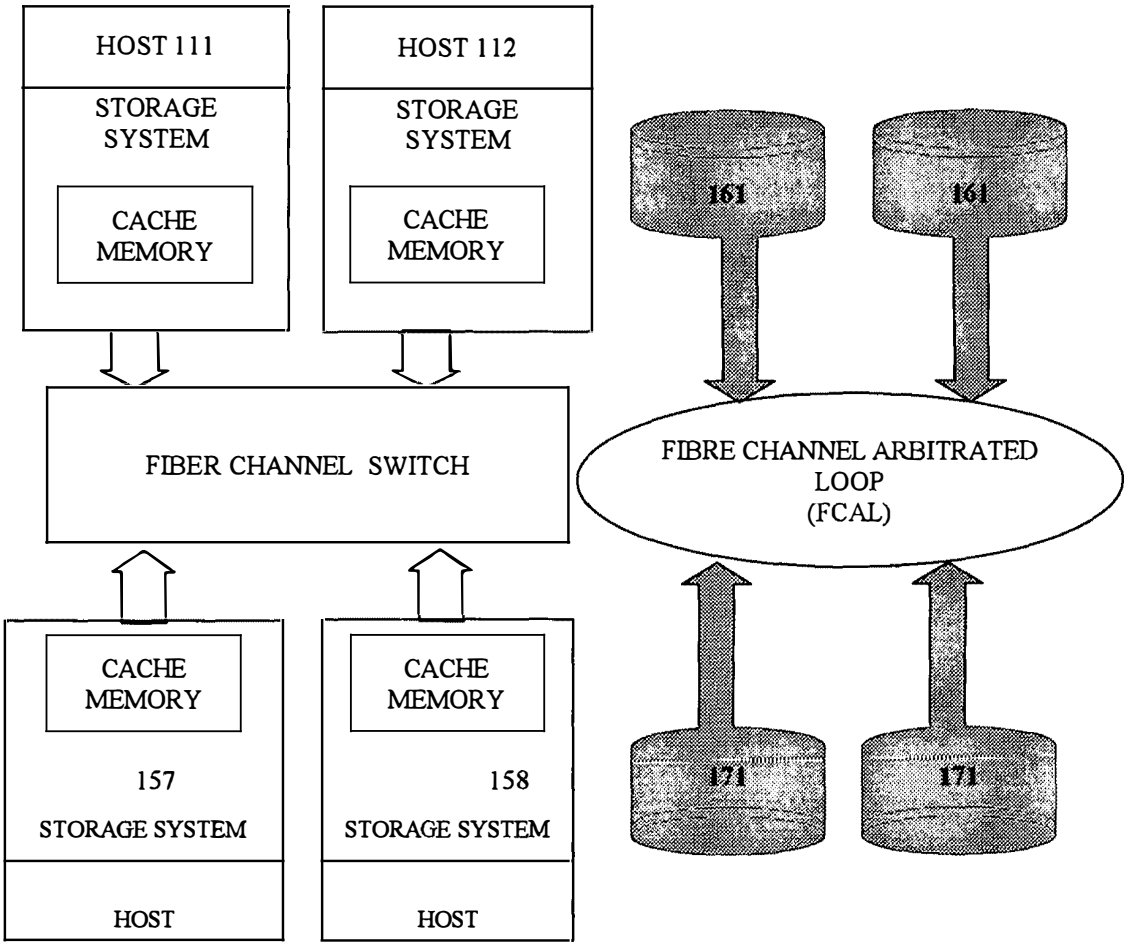

FIG. 2B FIBER CHANNEL SWITCH FOR HOST COMPUTERS AND FIBRE CHANNEL ARBITRATED LOOP FOR STORAGE

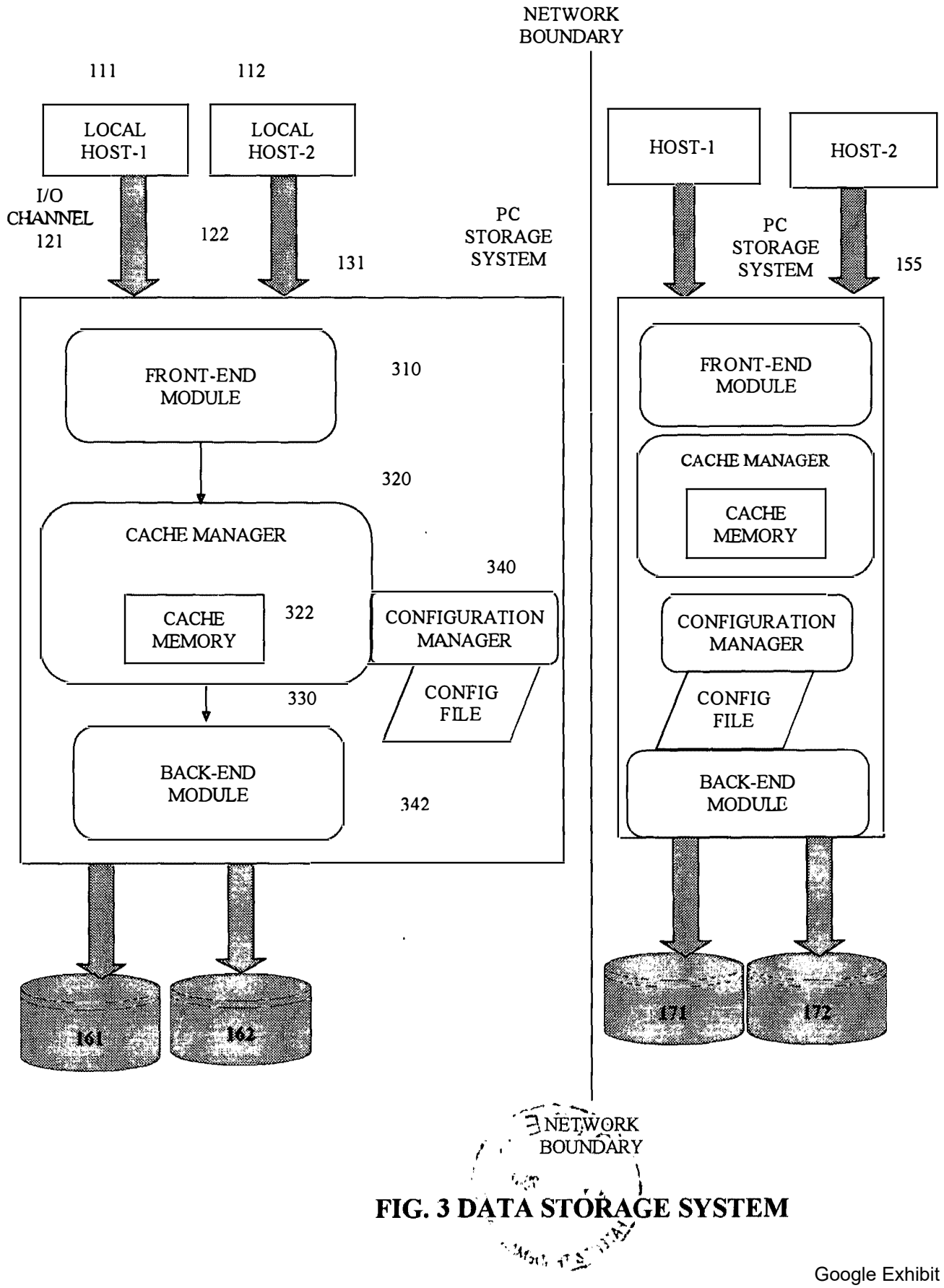

FIG. 3 DATA STORAGE SYSTEM

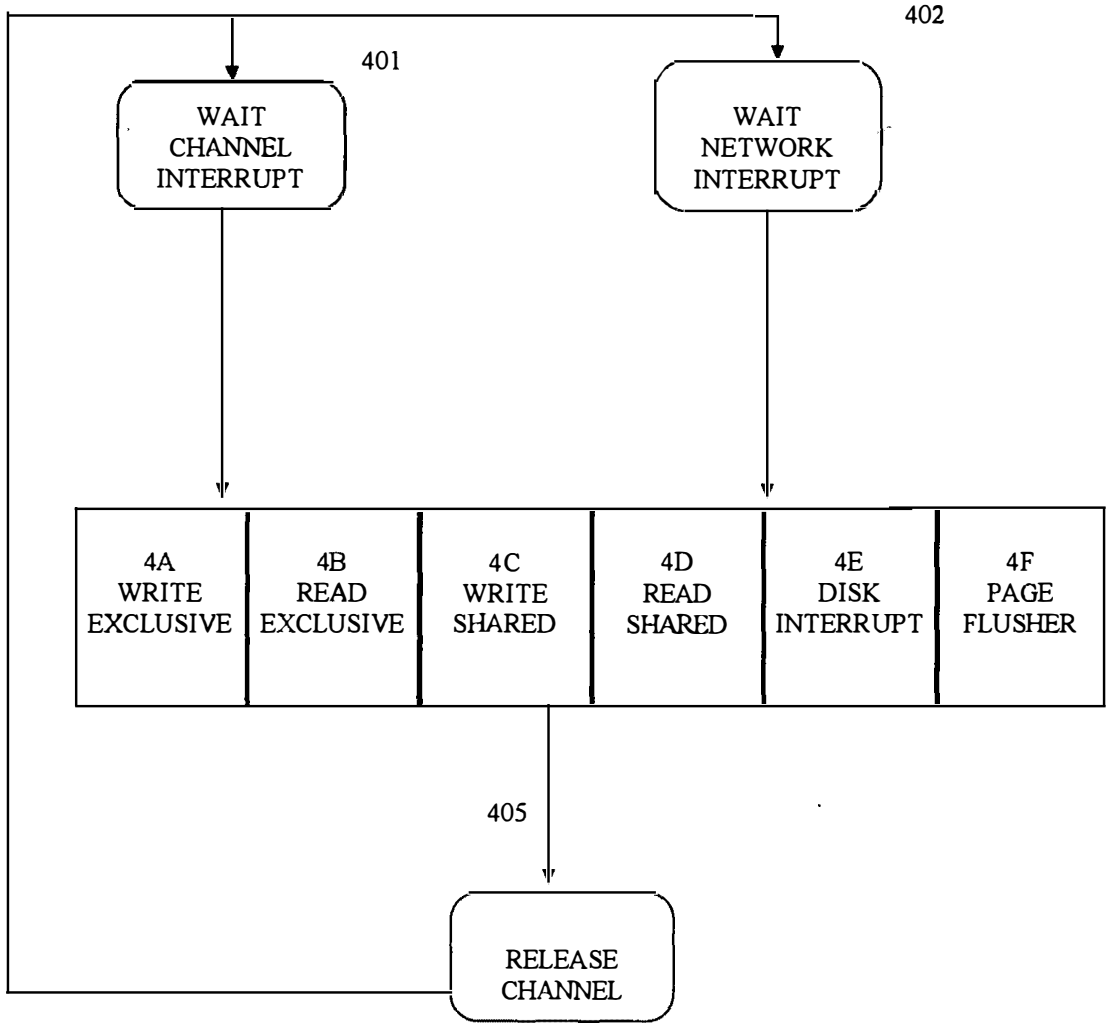

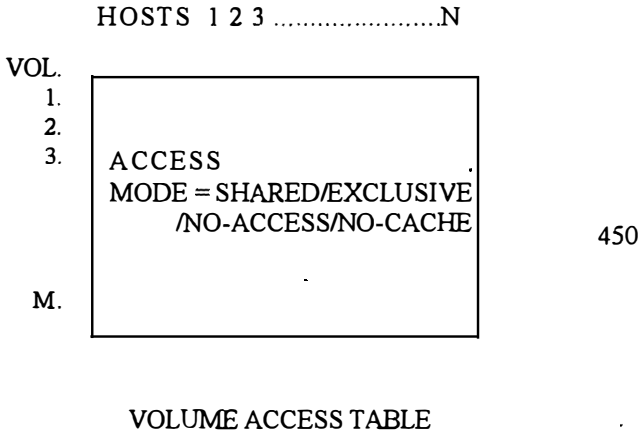

FIG. 4 READ/WRITE FLOWCHART OVERVIEW

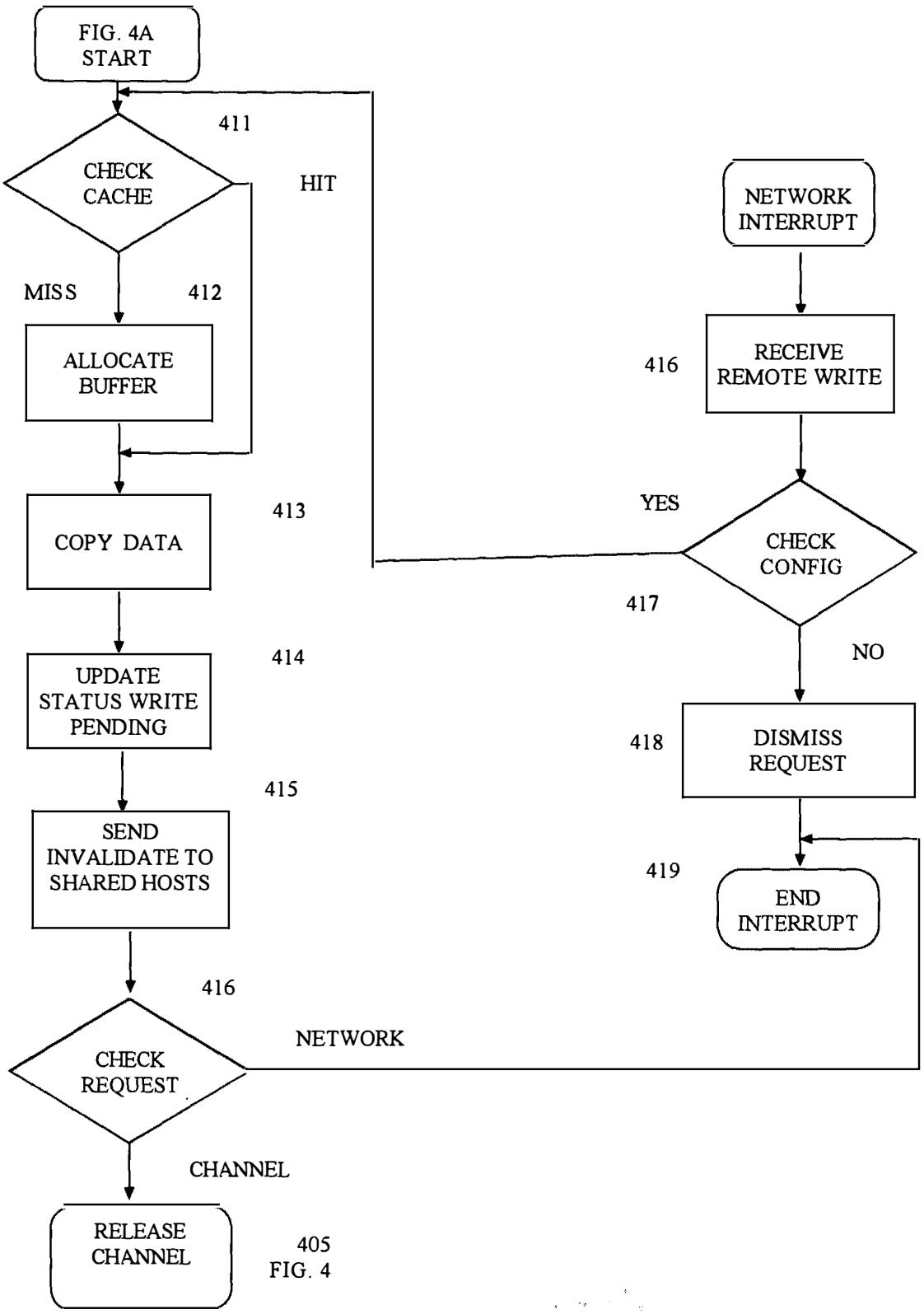

FIG. 4A WRITE EXCLUSIVE

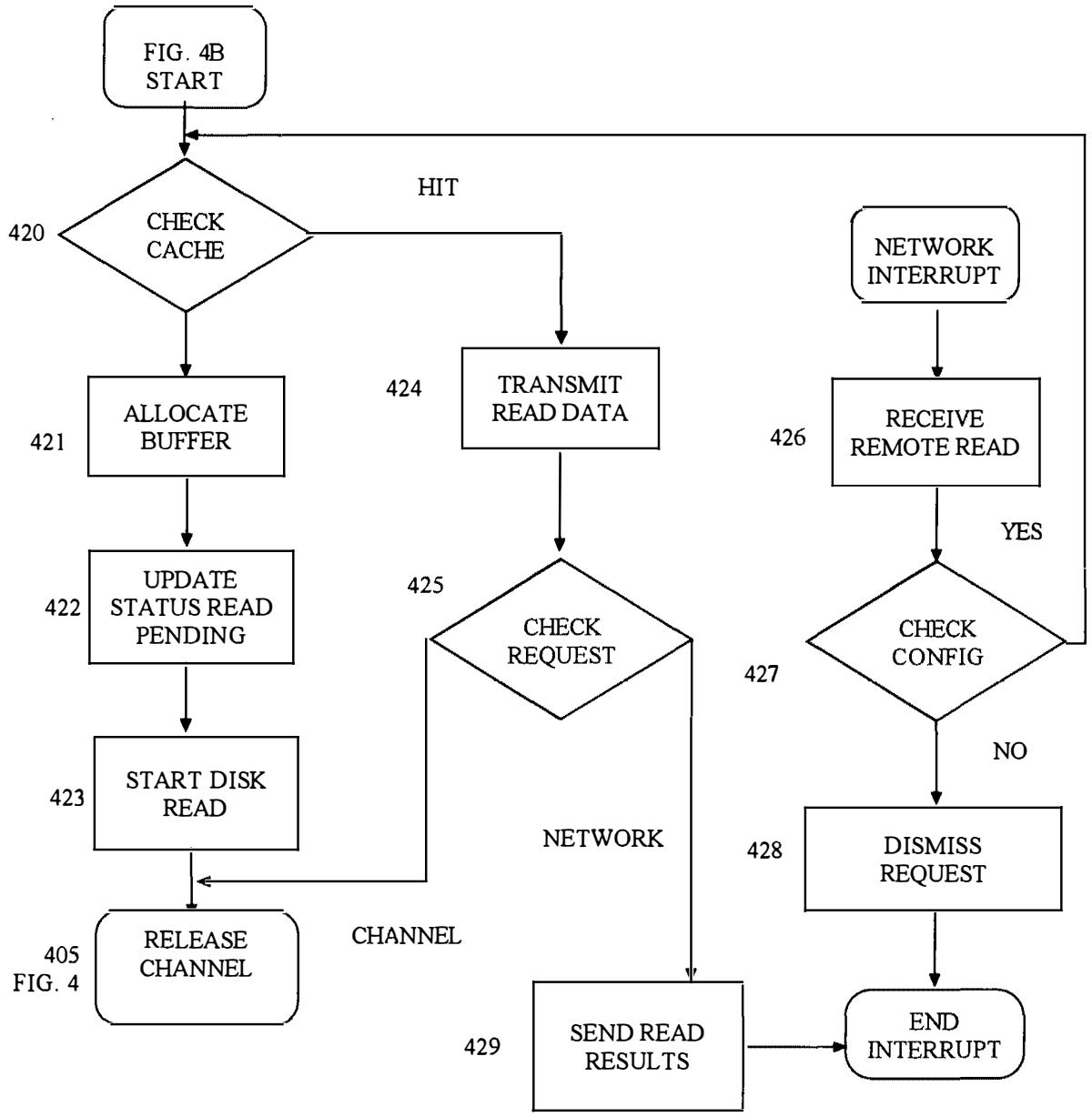

FIG. 4B READ EXCLUSIVE

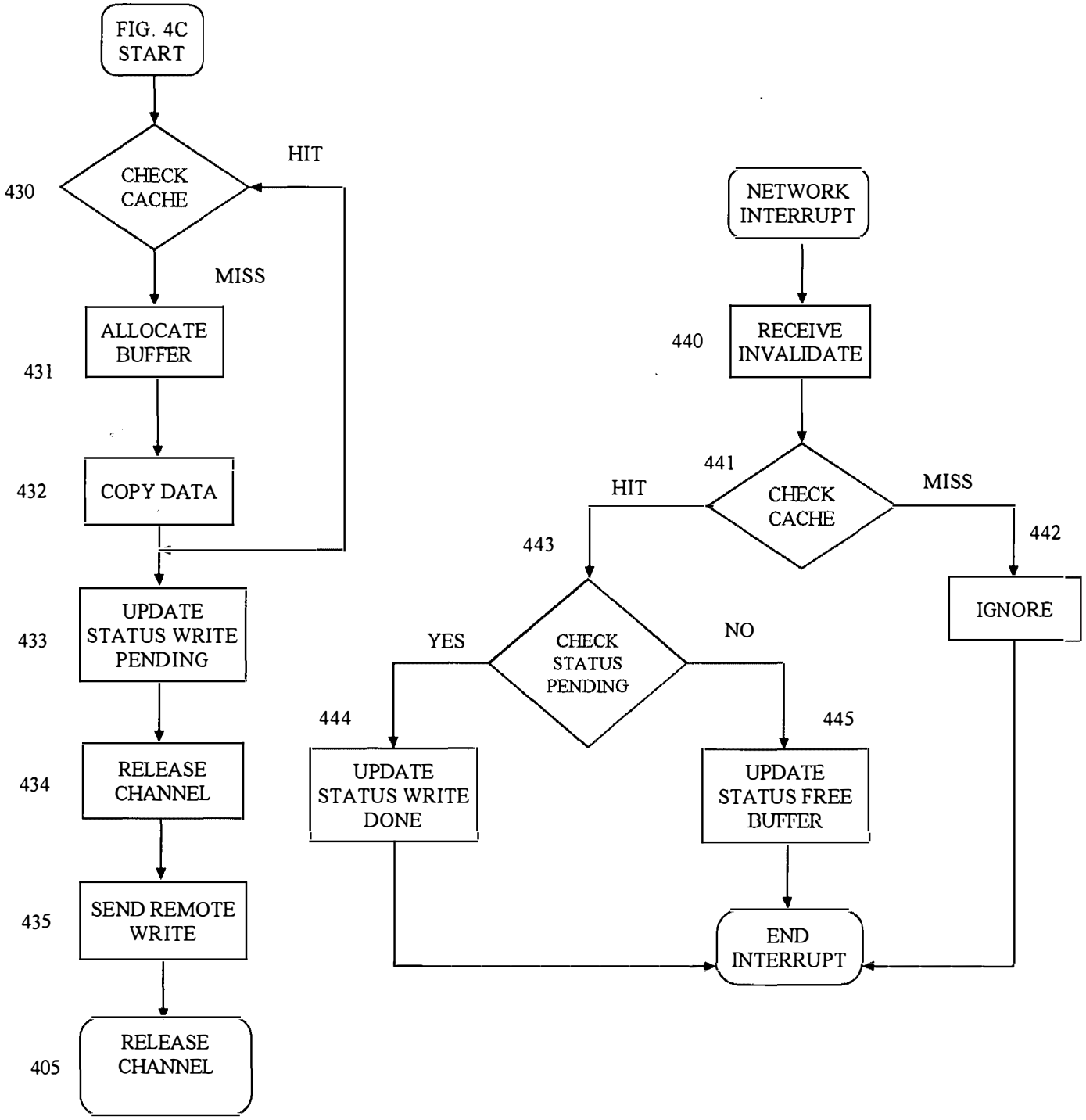

FIG. 4C WRITE SHARED

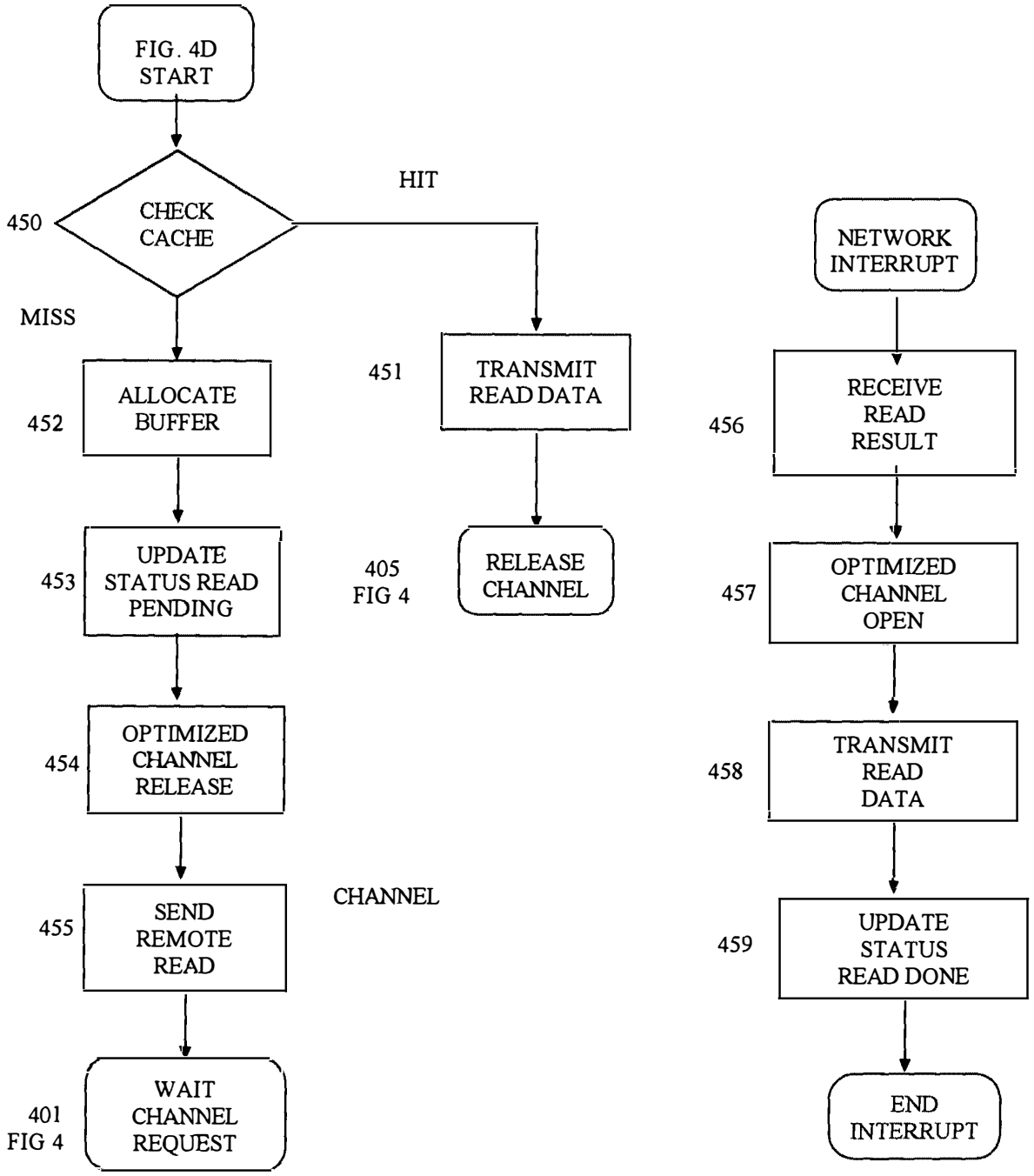

FIG. 4D READ SHARED

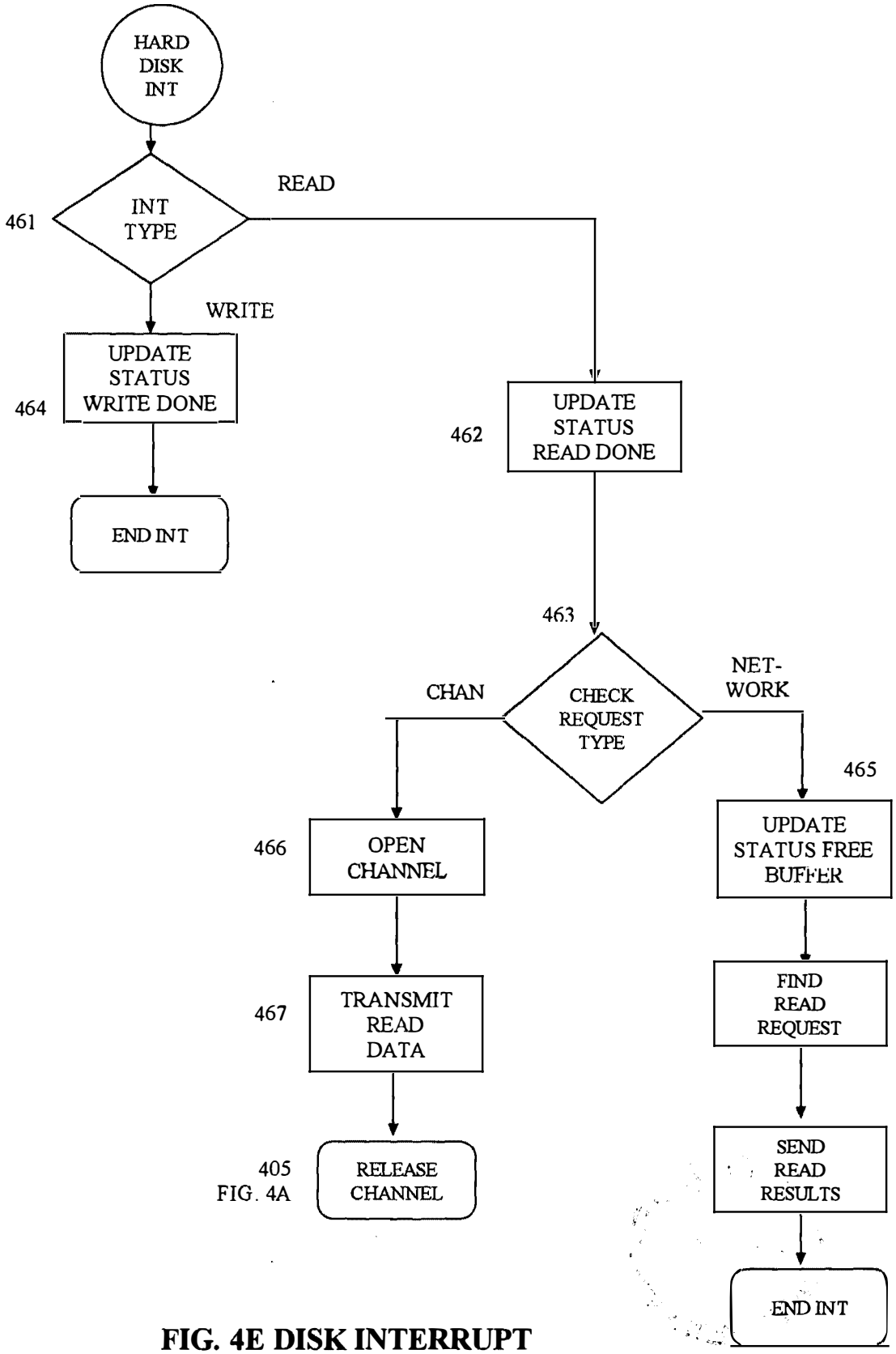

FIG. 4E DISK INTERRUPT

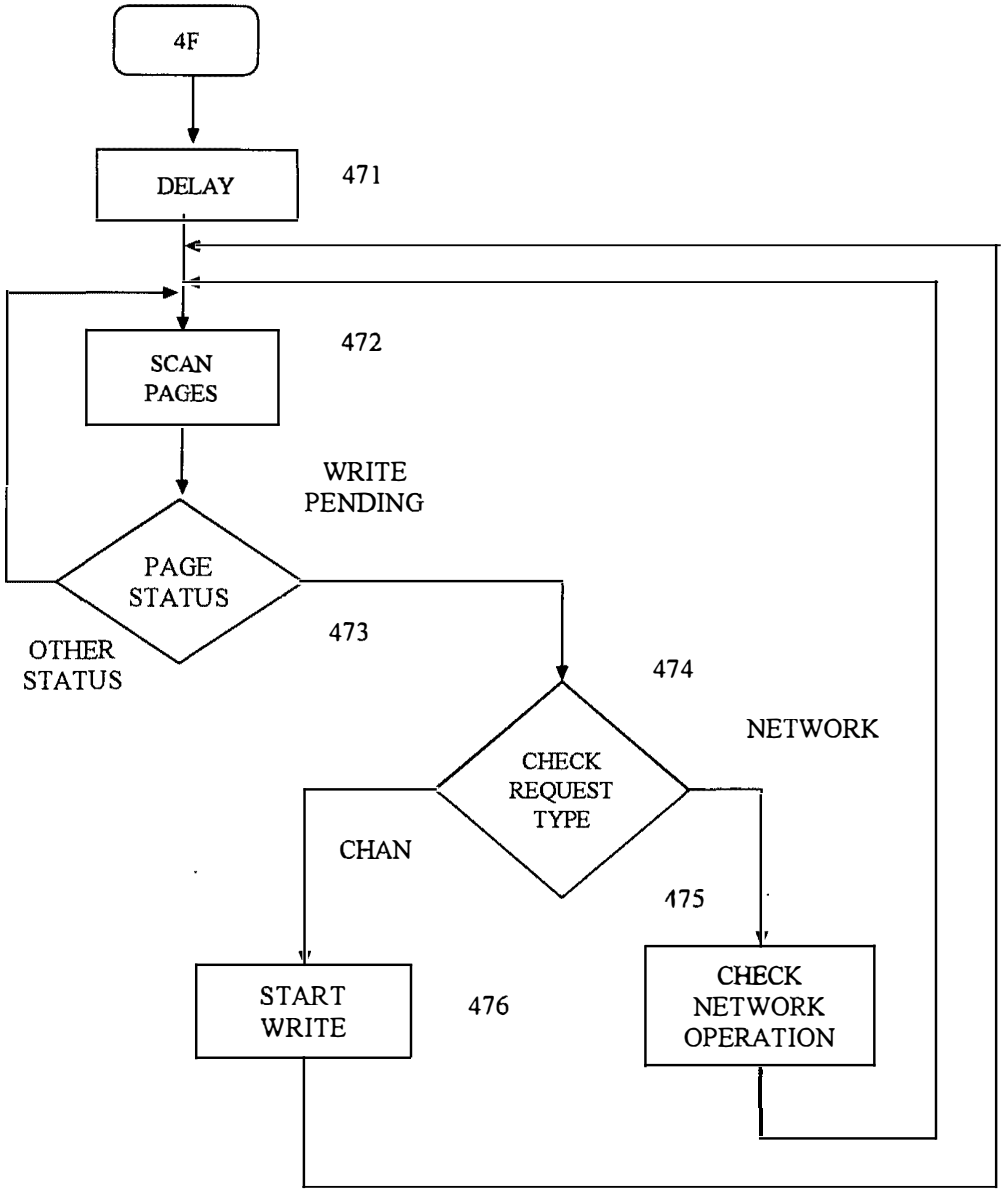

FIG. 4F MEMORY FLUSHER

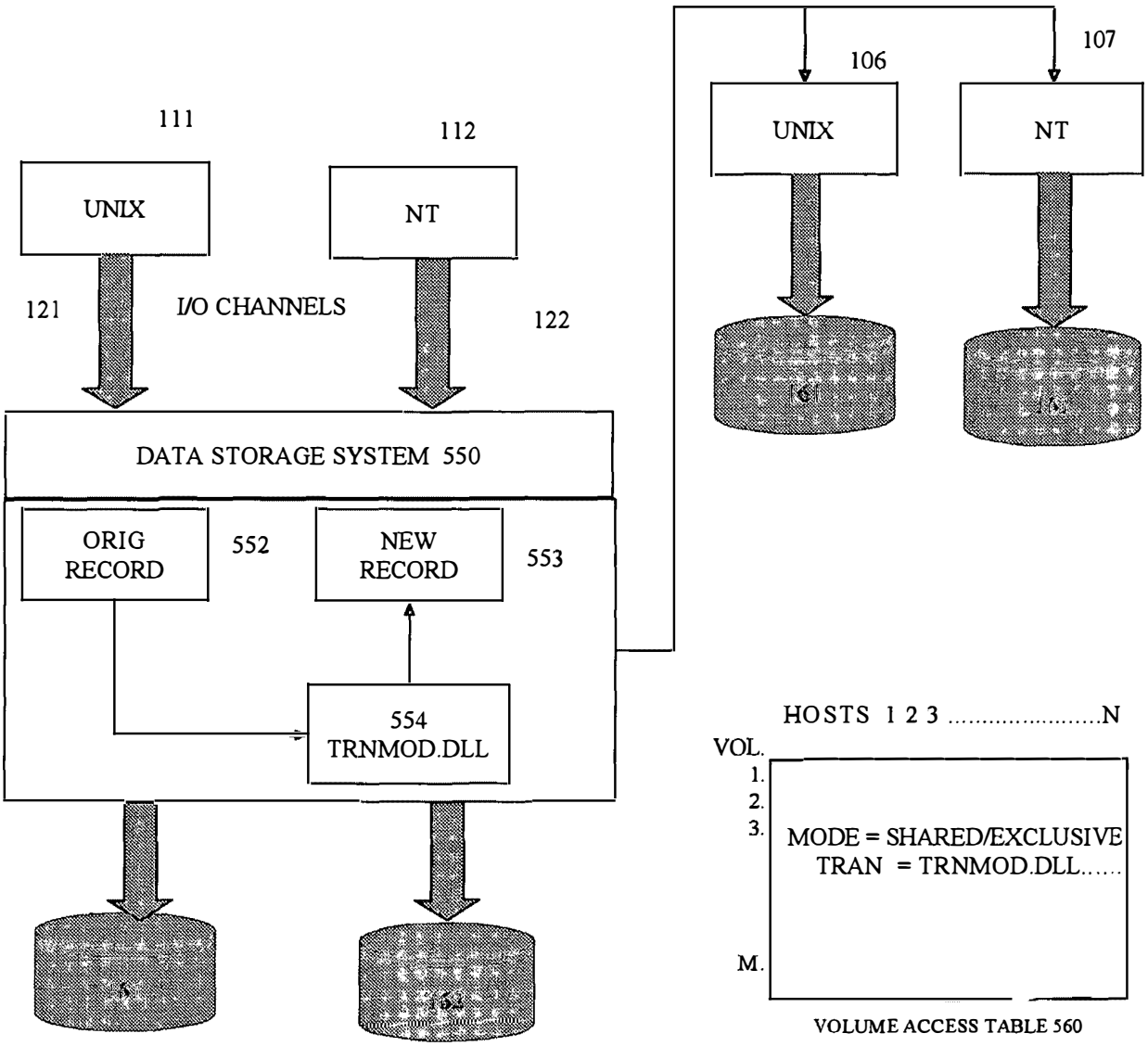


```
LD = LOADLIBRARY("TRNMOD.DLL");
APROC = GETPROCADDRESS(
LD, "TRAN_READREC");

APROC(ORIG_RECORD, NEW_RECORD);
```

LOADING TRANSLATOR 570

FIG. 5 DATA SHARING

OIPE JC66
FEB 2 6 2001
PATENT & TRADEMARK OFFICE

2751
2185
#7/3-6-01
V. Jones

HONORABLE COMMISSIONER
OF PATENTS AND TRADEMARKS
Washington, D.C. 20231

RECEIVED
MAR -5 2001
TC 2100 MAILROOM

In The United States Patent and Trademark Office

Application Number: 09/236,409
Filing Date: 1999-1-22
Grp Art Unit: 2751

Applicant: Ilya Gertner
App. Title: Data Storage System Comprising a Network of PCs and Method Using Same

Mail: February 20, 2001
Framingham, MA

EXTENSION OF TIME- The First Month

Commissioner of Patents and Trademarks
Washington, District of Columbia 20231

Sir:

Please extend by a month the time for considering the above application.
Enclosed please find a check for $55.00 as required by a small entity.

Please let me know if there are any issues with this request.

Sincerely, Ilya Gertner

Ilya Gertner
Application Pro Se
President of Network Disk, Inc.
5 Gaslight Lane
Framingham, MA 01701

Cel: (508) 740-4126
Office:(508) 872-4586
Fax: (508) 872-2414

Email: Gertner@networkdisk.com

02/28/2001 YPOLITE1 00000010 09236409
01 FC:215 55.00 OP

UNITED STATES DEPARTMENT OF COMMERCE
Patent and Trademark Office
Address: COMMISSIONER OF PATENTS AND TRADEMARKS
Washington, D.C. 20231

APPLICATION NO.	FILING DATE	FIRST NAMED INVENTOR	ATTORNEY DOCKET NO.
09/236,409	01/22/99	GERTNER I	

TM02/1120

ILYA GERTNER
NETWORK DISK INC
5 GASLIGHT LANE
FRAMINGHAM, MA 01701

EXAMINER
NGUYEN, T

ART UNIT	PAPER NUMBER
2187	6

DATE MAILED: 11/20/00

Please find below and/or attached an Office communication concerning this application or proceeding.

Commissioner of Patents and Trademarks

PTO-90C (Rev. 2/95)
*U.S. GPO: 2000-473-000/44602

1 - File Copy

Office Action Summary	Application No. 09/236,409	Applicant(s) Gertner
	Examiner T Nguyen	Group Art Unit 2187

—The MAILING DATE of this communication appears on the cover sheet beneath the correspondence address—

Period for Reply

A SHORTENED STATUTORY PERIOD FOR REPLY IS SET TO EXPIRE 3 MONTH(S) FROM THE MAILING DATE OF THIS COMMUNICATION.

- Extensions of time may be available under the provisions of 37 CFR 1.136(a). In no event, however, may a reply be timely filed after SIX (6) MONTHS from the mailing date of this communication.
- If the period for reply specified above is less than thirty (30) days, a reply within the statutory minimum of thirty (30) days will be considered timely.
- If NO period for reply is specified above, such period shall, by default, expire SIX (6) MONTHS from the mailing date of this communication .
- Failure to reply within the set or extended period for reply will, by statute, cause the application to become ABANDONED (35 U.S.C. § 133).

Status

☒ Responsive to communication(s) filed on 10/10/02.

☐ This action is **FINAL.**

☐ Since this application is in condition for allowance except for formal matters, **prosecution as to the merits is closed** in accordance with the practice under *Ex parte Quayle,* 1935 C.D. 1 1; 453 O.G. 213.

Disposition of Claims

☒ Claim(s) 1-4 is/are pending in the application.

Of the above claim(s) _____ is/are withdrawn from consideration.

☐ Claim(s) _____ is/are allowed.

☒ Claim(s) 1-4 is/are rejected.

☐ Claim(s) _____ is/are objected to.

☐ Claim(s) _____ are subject to restriction or election requirement.

Application Papers

☒ See the attached Notice of Draftsperson's Patent Drawing Review, PTO-948.

☐ The proposed drawing correction, filed on _____ is ☐ approved ☐ disapproved.

☐ The drawing(s) filed on _____ is/are objected to by the Examiner.

☐ The specification is objected to by the Examiner.

☐ The oath or declaration is objected to by the Examiner.

Priority under 35 U.S.C. § 119 (a)-(d)

☐ Acknowledgment is made of a claim for foreign priority under 35 U.S.C. § 11 9(a)-(d).

☐ All ☐ Some* ☐ None of the CERTIFIED copies of the priority documents have been

☐ received.

☐ received in Application No. (Series Code/Serial Number) _____.

☐ received in this national stage application from the International Bureau (PCT Rule 1 7.2(a)).

*Certified copies not received: _____.

Attachment(s)

☒ Information Disclosure Statement(s), PTO-1449, Paper No(s). 2

☒ Notice of Reference(s) Cited, PTO-892

☒ Notice of Draftsperson's Patent Drawing Review, PTO-948

☐ Interview Summary, PTO-413

☐ Notice of Informal Patent Application, PTO-152

☐ Other _____

Office Action Summary

Part of Paper No. 6

Google Exhibit 1002
Google v. LS Cloud Storage Technologies
IPR2023-00777, Page 190 of 280

*U.S. GPO: 1998-454-457/97505

DETAILED ACTION

1. The is a response to the election, filed 10/10/00. Claims 1-4 are elected. Claims 5-11 are canceled.

2. The IDS, filed 6/21/99, has been considered.

Claim Rejections - 35 USC § 112

3. Claims 2,3 are rejected under 35 U.S.C. 112, first paragraph, as containing subject matter which was not described in the specification in such a way as to enable one skilled in the art to which it pertains, or with which it is most nearly connected, to make and/or use the invention.

As to claim 2, Applicant claims a no-access mode to which the Examiner cannot find in the specification. Accordingly, there is no support for this limitation. Therefore, one of ordinary skills in the art would not be able to make/use the invention, as claimed.

As to claim 3, Applicant claims the configuration manager comprising: software for receiving an update request; software for suspending execution of remote configuration managers; software for updating remote configuration files; and software for resuming execution of remote configuration managers. However, the Examiner cannot find support for these "software" that make up the configuration manager, in the specification. Accordingly, there is no support for these limitation. Therefore, one of ordinary skills in the art would not be able to make/use the invention, as claimed.

Best Available Copy

Claim Rejections - 35 USC § 102

4. The following is a quotation of the appropriate paragraphs of 35 U.S.C. 102 that form the basis for the rejections under this section made in this Office action:

> A person shall be entitled to a patent unless --
>
> (e) the invention was described in a patent granted on an application for patent by another filed in the United States before the invention thereof by the applicant for patent, or on an international application by another who has fulfilled the requirements of paragraphs (1), (2), and (4) of section 371(c) of this title before the invention thereof by the applicant for patent.

5. Claims 1,4 are rejected under 35 U.S.C. 102(e) as being anticipated by Olnowich (US 6,044,438).

As to claim 1:

Olnowich discloses memory controller for controller memory accesses across networks in distributed shared memory processing systems. Olnowich discloses a data storage system comprising:

a network (Figures 1A - 2B) interconnecting a plurality of PCS each of which includes:

an I/O channel adapter for transmitting data over the channel and a network adapter for transmitting control signals and data over the network (I/O controller 52; Figure 2B);

front-end software for handling I/O requests arriving to the I/O channel adapter and the network adapter (it is inherent that Olnowich has software to control I/O requests between the I/O controller and the network adapter (Figure 2B; col 10 ln 49 - col 11 ln 62);

cache manager software for handling data stored in the cache memory of the PC, said cache memory comprises a portion of a distributed cache memory stored in the plurality of PCS interconnected by the network (memory controller 210; Figure 2) ;

back-end software for handling reads and writes to disks (process read/write requests; col 16 lns 29-39); and

a configuration manager software module for managing resources in the cache manager to ensure consistency of data stored in the distributed cache (abstract; cols 7-8).

As to claim 4:

Olnowich teaches the PCS are off-the-shelf hardware components (the computers on the network are normal off-the-shelf computer systems; Figures 1-3).

Conclusion

6. Any response to this action should be mailed to:

Commissioner of Patents and Trademarks

Washington, D.C. 20231

or faxed to:

(703) 308-9051 (for formal communications intended for entry)

or:

(703) 305-9731 (for informal or draft communications, please label "PROPOSED" or "DRAFT")

Hand-delivered responses should be brought to Crystal Park II, 2121 Crystal Drive, Arlington, VA, Sixth Floor (Receptionist).

7. Any inquiry concerning this communication or earlier communications from the examiner should be directed to Than Nguyen whose telephone number is (703) 305-3866.

8. Any inquiry of a general nature or relating to the status of this application should be directed to the Group receptionist whose telephone number is (703) 305-9700.

Than Nguyen

November 13, 2000

ATTACHMENT TO AND MODIFICATION OF NOTICE OF ALLOWABILITY (PTO-37)

(November, 2000)

NO EXTENSIONS OF TIME ARE PERMITTED TO FILE CORRECTED OR FORMAL DRAWINGS, OR A SUBSTITUTE OATH OR DECLARATION, notwithstanding any indication to the contrary in the attached Notice of Allowability (PTO-37).

If the following language appears on the attached Notice of Allowability, the portion lined through below is of no force and effect and is to be ignored[1]:

A SHORTENED STATUTORY PERIOD FOR RESPONSE to comply with the requirements noted below is set to EXPIRE **THREE MONTHS** FROM THE "DATE MAILED" of this Office action. Failure to comply will result in ABANDONMENT of this application. ~~Extensions of time may be obtained under the provisions of 37 CFR 1.136(a).~~

Similar language appearing in any attachments to the Notice of Allowability, such as in an Examiner's Amendment/Comment or in a Notice of Draftperson's Patent Drawing Review, PTO-948, is also to be ignored.

---

[1] The language which is crossed out is contrary to amended 37 CFR 1.85(c) and 1.136. See "*Changes to Implement the Patent Business Goals*", 65 *Fed. Reg.* 54603, 54629, 54641, 54670, 54674 (September 8, 2000), 1238 *Off. Gaz. Pat. Office* 77, 99, 110, 135, 139 (September 19, 2000).

FORM PTO-892	U.S. DEPARTMENT OF COMMERCE PATENT AND TRADEMARK OFFICE	SERIAL NO. 09/236,409	GROUP ART UNIT 2751	ATTACHMENT TO PAPER NO.	6
NOTICE OF REFERENCES CITED		APPLICANT(S) Gertner			

U.S. PATENT DOCUMENTS

*		DOCUMENT NO.	DATE	NAME	CLASS	SUB-CLASS	FILING DATE
	A	6,044,438	3/2000	Olnowich	711	130	
	B	6,122,659	9/2000	Olnowich	709	213	
	C	6,026,461	2/2000	Baxter et al.	710	244	
	D	5,887,146	3/1999	Baxter et al	710	104	
	E	5,577,226	11/1996	Percival	711	119	
	F						
	G						
	H						
	I						
	J						
	K						

FOREIGN PATENT DOCUMENTS

*		DOCUMENT NO.	DATE	COUNTRY	NAME	CLASS	SUB-CLASS
	L						
	M						
	N						
	O						
	P						
	Q						

OTHER REFERENCES (Including Author, Title, Date, Pertinent Pages, Etc.)

	R	
	S	
	T	
	U	

EXAMINER	DATE	
Than Nguyen	November 13, 2000	Form892ccs2106b

* A copy of this reference is not being furnished with this office action.
(See Manual of Patent Examining Procedure, section 707.05(a).)

Please type a plus sign (+) inside this box → [+]

OIPE JUN 2 1 1999 JC22 PATENT & TRADEMARK OFFICE

PTO/SB/08A (10-96)
Approved for use through 10/31/99. OMB 0651-0031
Patent and Trademark Office: U.S. DEPARTMENT OF COMMERCE

Under the Paperwork Reduction Act of 1995, no persons are required to respond to a collection of information unless it contains a valid OMB control number.

2

Substitute for form 1449A/PTO

INFORMATION DISCLOSURE STATEMENT BY APPLICANT

(use as many sheets as necessary)

Sheet 1 of 2

Complete if Known

Application Number	09/236,409
Filing Date	01/22/99
First Named Inventor	Ilya Gertner
Group Art Unit	~~2751~~ 2187
Examiner Name	T Nguyen
Attorney Docket Number	

U.S. PATENT DOCUMENTS

Examiner Initials*	Cite No.[1]	U.S. Patent Document Number	Kind Code[2] (if known)	Name of Patentee or Applicant of Cited Document	Date of Publication of Cited Document MM-DD-YYYY	Pages, Columns, Lines, Where Relevant Passages or Relevant Figures Appear
NS		5,600,817		Macon Jr., et. al.	02-04-1997	2, 1
		5,644,751		Burnett, et. al.	07-01-1997	3, 14
		5,649,152		Ohran, et. al.	07-15-1997	
		5,701,516		Chen et. al.	12-23-1997	3, 18
		5,715,455		Macon Jr., et. al	02-03-1998	
		5,717,884		Gzym et. al. 2/1998	02-02-~~1998~~	1, 39
		5,742,792		Yanai, et. al.	04-21-1998	2, 17
		5,743,933		Kijima et. al.	04-21-1998	
		5,748,985		Kanai, et. al.	05-05-1998	
		5,751,993		Ofek et. al.	05-12-1998	1, 44
		5,758,050		Brady, et. al.	05-26-1998	2, 3
		5,787,473		Ofek, et. al.	07-29-1998	
		5,790,795		Hough	08-04-1998	3, 24
		5,802,553		Robinson et. al.	09-01-1998	
		5,805,857		Colegrove	09-08-1998	
		5,819,292		Hitz, et. al.	10-06-1998	3, 12
		5,819,310		Vishlitzky et. al.	10-06-1998	1, 42
		5,828,475		Bennet et. al.	10-27-1998	4, 14
		5,841,997		Bleiweiss et. al.	11-24-1998	4, 13
NS		5,848,251		Lomelino, et. al.	12-08-1998	2, 23

per FC Jan 1998

RECEIVED JUN 2 8 1999 Group 2700

FOREIGN PATENT DOCUMENTS

Examiner Initials*	Cite No.[1]	Foreign Patent Document Office[3]	Number[4]	Kind Code[5] (if known)	Name of Patentee or Applicant of Cited Document	Date of Publication of Cited Document MM-DD-YYYY	Pages, Columns, Lines, Where Relevant Passages or Relevant Figures Appear	T[6]

Examiner Signature	[signature]	Date Considered	11/13/00

*EXAMINER: Initial if reference considered, whether or not citation is in conformance with MPEP 609. Draw line through citation if not in conformance and not considered. Include copy of this form with next communication to applicant.

[1] Unique citation designation number. [2] See attached Kinds of U.S. Patent Documents. [3] Enter Office that issued the document, by the two-letter code (WIPO Standard ST.3). [4] For Japanese patent documents, the indication of the year of the reign of the Emperor must precede the serial number of the patent document. [5] Kind of document by the appropriate symbols as indicated on the document under WIPO Standard ST. 16 if possible. [6] Applicant is to place a check mark here if English language Translation is attached.

Burden Hour Statement: This form is estimated to take 2.0 hours to complete. Time will vary depending upon the needs of the individual case. Any comments on the amount of time you are required to complete this form should be sent to the Chief Information Officer, Patent and Trademark Office, Washington, DC 20231. DO NOT SEND FEES OR COMPLETED FORMS TO THIS ADDRESS. SEND TO: Assistant Commissioner for Patents, Washington, DC 20231.

Google Exhibit 1002
Google v. LS Cloud Storage Technologies
IPR2023-00777, Page 197 of 280

Please type a plus sign (+) inside this box → +

PTO/SB/08A (10-96)
Approved for use through 10/31/99. OMB 0651-0031
Patent and Trademark Office: U.S. DEPARTMENT OF COMMERCE

Under the Paperwork Reduction Act of 1995, no persons are required to respond to a collection of information unless it contains a valid OMB control number.

OIPE JUN 2 1 1999 PATENT & TRADEMARK OFFICE

2

Substitute for form 1449A/PTO

INFORMATION DISCLOSURE STATEMENT BY APPLICANT

(use as many sheets as necessary)

Sheet 2 of 2

Complete if Known	
Application Number	09/236,409
Filing Date	01/22/99
First Named Inventor	Ilya Gertner
Group Art Unit	~~2751~~ 2127
Examiner Name	T Nguyen
Attorney Docket Number	

U.S. PATENT DOCUMENTS

Examiner Initials*	Cite No.[1]	U.S. Patent Document Number	Kind Code[2] (if known)	Name of Patentee or Applicant of Cited Document	Date of Publication of Cited Document MM-DD-YYYY	Pages, Columns, Lines, Where Relevant Passages or Relevant Figures Appear
NG		5,852,715		Raziel, et. al.	12-22-1998	
		5,854,942		Penokie	12-29-1998	
		5,860,026		Kitta et al	01-12-1999	
NG		5,860,137		Raz, et. al.	01-12-1999	

RECEIVED
JUN 28 1999
Group 2700

FOREIGN PATENT DOCUMENTS

Examiner Initials*	Cite No.[1]	Foreign Patent Document Office[3]	Number[4]	Kind Code[5] (if known)	Name of Patentee or Applicant of Cited Document	Date of Publication of Cited Document MM-DD-YYYY	Pages, Columns, Lines, Where Relevant Passages or Relevant Figures Appear	T[6]

Examiner Signature	TN	Date Considered	11/13/00

*EXAMINER: Initial if reference considered, whether or not citation is in conformance with MPEP 609. Draw line through citation if not in conformance and not considered. Include copy of this form with next communication to applicant.

[1] Unique citation designation number. [2] See attached Kinds of U.S. Patent Documents. [3] Enter Office that issued the document, by the two-letter code (WIPO Standard ST.3). [4] For Japanese patent documents, the indication of the year of the reign of the Emperor must precede the serial number of the patent document. [5] Kind of document by the appropriate symbols as indicated on the document under WIPO Standard ST. 16 if possible. [6] Applicant is to place a check mark here if English language Translation is attached.

Burden Hour Statement: This form is estimated to take 2.0 hours to complete. Time will vary depending upon the needs of the individual case. Any comments on the amount of time you are required to complete this form should be sent to the Chief Information Officer, Patent and Trademark Office, Washington, DC 20231. DO NOT SEND FEES OR COMPLETED FORMS TO THIS ADDRESS. SEND TO: Assistant Commissioner for Patents, Washington, DC 20231.

Please type a plus sign (+) inside this box → [+]

PTO/SB/08B (10-96)
Approved for use through 10/31/99. OMB 0651-0031
Patent and Trademark Office: U.S. DEPARTMENT OF COMMERCE

Under the Paperwork Reduction Act of 1995, no persons are required to respond to a collection of information unless it contains a valid OMB control number.

Substitute for form 1449B/PTO

INFORMATION DISCLOSURE STATEMENT BY APPLICANT

(use as many sheets as necessary)

Sheet 1 of 1

Complete if Known	
Application Number	09/236,409
Filing Date	01/22/1999
First Named Inventor	Ilya Gertner
Group Art Unit	~~2751~~ 2187
Examiner Name	
Attorney Docket Number	

OTHER PRIOR ART – NON PATENT LITERATURE DOCUMENTS

Examiner Initials*	Cite No.[1]	Include name of the author (in CAPITAL LETTERS), title of the article (when appropriate), title of the item (book, magazine, journal, serial, symposium, catalog, etc.), date, page(s), volume-issue number(s), publisher, city and/or country where published.	T[2]
NPV		SMITH, Cache Memories, Computer Surveys, Vol. 14, No. 3 September 1982 (Research paper)	
		KAREDLA, et. al., Caching Strategies to Improve Disk System Performance, Computer, Vol. 27, No. 3, March 1994 (Research paper)	
		NEEMA, Data Sharing, Storage Management Solutions, Vol. 3, No. 3, MAY 1998	
NPV		HOETGER, Jerry, Storage Management in UNIX environments Storage Management Solutions, Vol. 3, No. 4, August 1998	
		RECEIVED JUN 28 1999 Group 2700	

Examiner Signature	[signature]	Date Considered	01/13/00

*EXAMINER: Initial if reference considered, whether or not citation is in conformance with MPEP 609. Draw line through citation if not in conformance and not considered. Include copy of this form with next communication to applicant.

[1] Unique citation designation number. [2] Applicant is to place a check mark here if English language Translation is attached.

Burden Hour Statement: This form is estimated to take 2.0 hours to complete. Time will vary depending upon the needs of the individual case. Any comments on the amount of time you are required to complete this form should be sent to the Chief Information Officer, Patent and Trademark Office, Washington, DC 20231. DO NOT SEND FEES OR COMPLETED FORMS TO THIS ADDRESS. SEND TO: Assistant Commissioner for Patents, Washington, DC 20231.

Form PTO 948 (Rev. 8-98) U.S. DEPARTMENT OF COMMERCE - Patent and Trademark Office Application No. 09/236409

NOTICE OF DRAFTSPERSON'S PATENT DRAWING REVIEW

The drawing(s) filed (insert date) 1/22/99 are:

A. ☐ approved by the Draftsperson under 37 CFR 1.84 or 1.152.

B. ☐ objected to by the Draftsperson under 37 CFR 1.84 or 1.152 for the reasons indicated below. The Examiner will require submission of new, corrected drawings when necessary. Corrected drawing must be sumitted according to the instructions on the back of this notice.

1. DRAWINGS. 37 CFR 1.84(a): Acceptable categories of drawings: Black ink. Color.
   - ___ Color drawings are not acceptable until petiton is granted. Fig(s) _____
   - ___ Pencil and non black ink not permitted. Fig(s) _____
2. PHOTOGRAPHS. 37 CFR 1.84 (b)
   - ___ 1 full-tone set is required. Fig(s) _____
   - ___ Photographs not properly mounted (must use brystol board or photographic double-weight paper). Fig(s) _____
   - ___ Poor quality (half-tone). Fig(s) _____
3. TYPE OF PAPER. 37 CFR 1.84(e)
   - ___ Paper not flexible, strong, white, and durable. Fig(s) _____
   - ___ Erasures, alterations, overwritings, interlineations, folds, copy machine marks not accepted. Fig(s) _____
   - ___ Mylar, velum paper is not acceptable (too thin). Fig(s) _____
4. SIZE OF PAPER. 37 CFR 1.84(f): Acceptable sizes:
   - ___ 21.0 cm by 29.7 cm (DIN size A4)
   - ___ 21.6 cm by 27.9 cm (8 1/2 x 11 inches)
   - ___ All drawing sheets not the same size. Sheet(s) _____
   - ___ Drawings sheets not an acceptable size. Fig(s) _____
5. MARGINS. 37 CFR 1.84(g): Acceptable margins:

   Top 2.5 cm Left 2.5cm Right 1.5 cm Bottom 1.0 cm
   SIZE: A4 Size
   Top 2.5 cm Left 2.5 cm Right 1.5 cm Bottom 1.0 cm
   SIZE: 8 1/2 x 11
   Margins not acceptable. Fig(s) 1, 4A, 5
   - ✓ Top (T) ✓ Left (L)
   - ✓ Right (R) ✓ Bottom (B)
6. VIEWS. 37 CFR 1.84(h)
   REMINDER: Specification may require revision to correspond to drawing changes.
   Partial views. 37 CFR 1.84(h)(2)
   - ___ Brackets needed to show figure as one entity. Fig(s) _____
   - ___ Views not labeled separately or properly. Fig(s) _____
   - ___ Enlarged view not labeled separately or properly. Fig(s) _____
7. SECTIONAL VIEWS. 37 CFR 1.84 (h)(3)
   - ___ Hatching not indicated for sectional portions of an object. Fig(s) _____
   - ___ Sectional designation should be noted with Arabic or Roman numbers. Fig(s) _____
8. ARRANGEMENT OF VIEWS. 37 CFR 1.84(i)
   - ___ Words do not appear on a horizontal, left-to-right fashion when page is either upright or turned so that the top becomes the right side, except for graphs. Fig(s) _____
9. SCALE. 37 CFR 1.84(k)
   - ___ Scale not large enough to show mechanism without crowding when drawing is reduced in size to two-thirds in reproduction. Fig(s) _____
10. CHARACTER OF LINES, NUMBERS, & LETTERS. 37 CFR 1.84(i)
    - ✓ Lines, numbers & letters not uniformly thick and well defined, clean, durable, and black (poor line quality). Fig(s) 1 — 3, 5
11. SHADING. 37 CFR 1.84(m)
    - ___ Solid black areas pale. Fig(s) _____
    - ___ Solid black shading not permitted. Fig(s) _____
    - ___ Shade lines, pale, rough and blurred. Fig(s) _____
12. NUMBERS, LETTERS, & REFERENCE CHARACTERS. 37 CFR 1.84(p)
    - ___ Numbers and reference characters not plain and legible. Fig(s) _____
    - ___ Figure legends are poor. Fig(s) _____
    - ___ Numbers and reference characters not oriented in the same direction as the view. 37 CFR 1.84(p)(1) Fig(s) _____
    - ___ English alphabet not used. 37 CFR 1.84(p)(2) Figs _____
    - ✓ Numbers, letters and reference characters must be at least .32 cm (1/8 inch) in height. 37 CFR 1.84(p)(3) Fig(s) 1, 5
13. LEAD LINES. 37 CFR 1.84(q)
    - ___ Lead lines cross each other. Fig(s) _____
    - ___ Lead lines missing. Fig(s) _____
14. NUMBERING OF SHEETS OF DRAWINGS. 37 CFR 1.84(t)
    - ___ Sheets not numbered consecutively, and in Arabic numerals beginning with number 1. Sheet(s) _____
15. NUMBERING OF VIEWS. 37 CFR 1.84(u)
    - ___ Views not numbered consecutively, and in Arabic numerals, beginning with number 1. Fig(s) _____
16. CORRECTIONS. 37 CFR 1.84(w)
    - ___ Corrections not made from prior PTO-948 dated _____
17. DESIGN DRAWINGS. 37 CFR 1.152
    - ___ Surface shading shown not appropriate. Fig(s) _____
    - ___ Solid black shading not used for color contrast. Fig(s) _____

COMMENTS

REVIEWER TANG DATE 3/1/99 TELEPHONE NO. 703 305 0896

ATTACHMENT TO PAPER NO. 6

INFORMATION ON HOW TO EFFECT DRAWING CHANGES

1. Correction of Informalities--37 CFR 1.85

File new drawings with the changes incorporated therein. The application number or the title of the invention, inventor's name, docket number (if any), and the name and telephone number of a person to call if the Office is unable to match the drawings to the proper application, should be placed on the back of each sheet of drawings in accordance with 37 CFR 1.84(c). Applicant may delay filing of the new drawings until receipt of the Notice of Allowability (PTOL-37). Extensions of time may be obtained under the provisions of 37 CFR 1.136. The drawing should be filed as a separate paper with a transmittal letter addressed to the Drawing Processing Branch.

2. Timing for Corrections

Applicant is required to submit **acceptable** corrected drawings within the three-month shortened statutory period set in the Notice of Allowability (PTOL-37). If a correction is determined to be unacceptable by the Office, applicant must arrange to have acceptable corrections resubmitted within the original three-month period to avoid the necessity of obtaining an extension of time and paying the extension fee. Therefore, applicant should file corrected drawings as soon a possible.

Failure to take corrective action within set (or extended) period will result in **ABANDONMENT** of the Application.

3. Corrections other than Informalities Noted by the Drawing Review Branch on the Form PTO-948.

All changes to the drawings, other than informalities noted by the Drawing Review Branch, **MUST** be approved by the examiner before the application will be allowed. No changes will be permitted to be made, other than correction of informalities, unless the examiner has approved the proposed changes.

WEST

Freeform Search

Database:
US Patents Full-Text Database
JPO Abstracts Database
EPO Abstracts Database
Derwent World Patents Index
IBM Technical Disclosure Bulletins

Term: 14 and 11

Display: 10 **Documents in Display Format:** TI **Starting with Number** 1

Generate: ○ Hit List ◉ Hit Count ○ Image

Search | Clear | Help | Logout | Interrupt

Main Menu | Show S Numbers | Edit S Numbers | Preferences

Search History

Today's Date: 11/9/2000

DB Name	Query	Hit Count	Set Name
USPT	('6046689')[PN]	1	L9
USPT	('6122659' '6044438' '6026461' '5887146' '5577226')[PN]	5	L8
USPT	l5 and l6	2	L7
USPT	network	194253	L6
USPT	l4 and l1	8	L5
USPT	cache near3 manag$	2030	L4
USPT	l1 and l2	0	L3
USPT	cache near3 (consisten$ or coheren$)	1892	L2
USPT	('5852715' '5854942' '5860026' '5860137' '5600817' '5644751' '5649152' '5701516' '5715455' '5717884' '5742792' '5743933' '5748985' '5751993' '5758050' '5787473' '5790795' '5802553' '5805857' '5819292' '5819310' '5828475' '5841997' '5848251')[PN]	24	L1

Google Exhibit 1002
Google v. LS Cloud Storage Technologies
IPR2023-00777, Page 202 of 280

```
=> s cache (3a) (consisten? or coheren?);s network

         16101 CACHE
          4377 CACHES
         16462 CACHE
                 (CACHE OR CACHES)
        211279 CONSISTEN?
         45935 COHEREN?
L1        1713 CACHE (3A) (CONSISTEN? OR COHEREN?)


        180190 NETWORK
         62193 NETWORKS
L2      191913 NETWORK
                 (NETWORK OR NETWORKS)

=> s l1 (p) l2

L3         169 L1 (P) L2

=> s l3/ab

          3601 CACHE/AB
           342 CACHES/AB
          3666 CACHE/AB
                 ((CACHE OR CACHES)/AB)
          6446 CONSISTEN?/AB
          5845 COHEREN?/AB
         32590 NETWORK/AB
          4414 NETWORKS/AB
         34513 NETWORK/AB
                 ((NETWORK OR NETWORKS)/AB)
L4          20 ((CACHE/AB (3A) (CONSISTEN?/AB OR COHEREN?/AB)) (P)
(NETWORK/AB)
               )
```

Gp ~~2759~~ 2187
#5
10/25/00
Jobbs

IN THE UNITED STATES PATENT AND TRADEMARK OFFICE

OIPE
OCT 1 0 2000
JC43
PATENT & TRADEMARK OFFICE

By US Express Mail
Express Mail No. EE 653794887 US
Oct 10, 2000

Application of I. Gertner
Serial No. 09/236,409
Filed: 01/22/99
For: Data Storage System Comprising Network Of PCs And Method Using Same
Examiner : Than Nguyen
Group/Art Unit : 2759

RECEIVED
OCT 19 2000
TC 2700 MAIL ROOM

RESPONSE TO THE RESTRICTION / ELECTION REQUIREMENT

IN THE CLAIMS

Please cancel claims 5-11 without prejudice.

REMARKS

In response to the restriction / election requirement in the Office Action dated 09/15/00 applicant elects to proceed with Group I (claims 1-4). Accordingly, the remaining claims of Group 2 (5-11) have been canceled without prejudice of any kind, including, without limitation, Applicant's right to claim the canceled subject matter in a substantive divisional, continuation, or another application claiming priority to the filing date of the above-identified application. Although Applicant traverses the restriction requirement, the above election has been made as required in the Office Action.

Respectfully submitted

October 5, 2000

Ilya Gertner

Ilya Gertner

5 Gaslight Lane
Framingham, 01701

508 620 1259

RECEIVED
OCT 18 2000
OIPE/JCWS

UNITED STATES DEPARTMENT OF COMMERCE
Patent and Trademark Office
Address: COMMISSIONER OF PATENTS AND TRADEMARKS
Washington, D.C. 20231

SERIAL NUMBER	FILING DATE	FIRST NAMED INVENTOR	ATTORNEY DOCKET NO.
09/236,409	01/22/99	GERTNER I	

EXAMINER

LMC1/0915

ILYA GERTNER
NETWORK DISK INC
5 GASLIGHT LANE
FRAMINGHAM MA 01701

ART UNIT	PAPER NUMBER
2759	34

DATE MAILED: 09/15/00

This is a communication from the examiner in charge of your application.
COMMISSIONER OF PATENTS AND TRADEMARKS

☒ This application has been examined ☐ Responsive to communication filed on _____ ☐ This action is made final.

A shortened statutory period for response to this action is set to expire [redacted], 30 days from the date of this letter.
Failure to respond within the period for response will cause the application to become abandoned. 35 U.S.C. 133

Part I THE FOLLOWING ATTACHMENT(S) ARE PART OF THIS ACTION:

1. ☐ Notice of References Cited by Examiner, PTO-892.
2. ☐ Notice of Draftsman's Patent Drawing Review, PTO-948.
3. ☐ Notice of Art Cited by Applicant, PTO-1449.
4. ☐ Notice of Informal Patent Application, PTO-152.
5. ☐ Information on How to Effect Drawing Changes, PTO-1474.
6. ☐ _____.

Part II SUMMARY OF ACTION

1. ☒ Claims 1-11 are pending in the application.

   Of the above, claims _____ are withdrawn from consideration.

2. ☐ Claims _____ have been cancelled.
3. ☐ Claims _____ are allowed.
4. ☐ Claims _____ are rejected.
5. ☐ Claims _____ are objected to.
6. ☒ Claims 1-11 are subject to restriction or election requirement.
7. ☐ This application has been filed with informal drawings under 37 C.F.R. 1.85 which are acceptable for examination purposes.
8. ☐ Formal drawings are required in response to this Office action.
9. ☐ The corrected or substitute drawings have been received on _____. Under 37 C.F.R. 1.84 these drawings are ☐ acceptable; ☐ not acceptable (see explanation or Notice of Draftsman's Patent Drawing Review, PTO-948).
10. ☐ The proposed additional or substitute sheet(s) of drawings, filed on _____. has (have) been ☐ approved by the examiner; ☐ disapproved by the examiner (see explanation).
11. ☐ The proposed drawing correction, filed _____, has been ☐ approved; ☐ disapproved (see explanation).
12. ☐ Acknowledgement is made of the claim for priority under 35 U.S.C. 119. The certified copy has ☐ been received ☐ not been received ☐ been filed in parent application, serial no. _____; filed on _____.
13. ☐ Since this application apppears to be in condition for allowance except for formal matters, prosecution as to the merits is closed in accordance with the practice under Ex parte Quayle, 1935 C.D. 11; 453 O.G. 213.
14. ☐ Other

EXAMINER'S ACTION

PTOL-326 (Rev. 2/93)

DETAILED ACTION

1. Claims 1-11 are pending.

2. The IDS, filed 6/21/99, has been received. The IDS will be considered after the restriction/election matter has been resolved.

Restriction/Election

3. Restriction to one of the following inventions is required under 35 U.S.C. 121:

   I. Claims 1-4, drawn to a network data storage system that maintains cache data coherency, classified in class 711, subclass 141.

   II. Claims 5-11, drawn to a method and apparatus in a network environment for mapping/translating a record data of one format to another format, classified in class 707, subclass 523.

4. Inventions I and II are related as subcombinations disclosed as usable together in a single combination. The subcombinations are distinct from each other if they are shown to be separately usable. In the instant case, invention I has separate utility such as maintaining cache coherency of data in a network system. Invention II has separate utility such as converting files of one format into another format. See MPEP § 806.05(d).

5. Because these inventions are distinct for the reasons given above and have acquired a separate status in the art as shown by their different classification, restriction for examination purposes as indicated is proper.

6. A telephone call was made to Ilya Gertner on 9/11/00 to request an oral election to the above restriction requirement, but did not result in an election being made.

Applicant is advised that the reply to this requirement to be complete must include an election of the invention to be examined even though the requirement be traversed (37 CFR 1.143).

Conclusion

7. Any response to this action should be mailed to:

Commissioner of Patents and Trademarks

Washington, D.C. 20231

or faxed to:

(703) 308-9051 (for formal communications intended for entry)

or:

(703) 305-9731 (for informal or draft communications, please label "PROPOSED" or "DRAFT")

Hand-delivered responses should be brought to Crystal Park II, 2121 Crystal Drive, Arlington, VA, Sixth Floor (Receptionist).

8. Any inquiry concerning this communication or earlier communications from the examiner should be directed to Than Nguyen whose telephone number is (703) 305-3866.

9. Any inquiry of a general nature or relating to the status of this application should be directed to the Group receptionist whose telephone number is (703) 305-9700.

Than Nguyen

September 11, 2000

2751
#3
S. Bond
9/13/00

O E
JUN 2 1 1999
JC22
PATENT & TRADEMARK OFFICE

HONORABLE COMMISSIONER
OF PATENTS AND TRADEMARKS
Washington, D.C. 20231

In The United States Patent and Trademark Office

Application Number: 09/236,409
Filing Date: 1999-1-22
Grp Art Unit: 2751

Applicant: Ilya Gertner
App. Title: Data Storage System Comprising a Network of PCs and Method Using Same

Ammendment: CLAIMS and NON-DISCLOSURE FORM

RECEIVED
JUN 2 8 1999
Group

Sir:

Please amend the above application with the additional claims below and enclosed Non-Disclosure Form. Please let me know if need to make an additional payment to the UPO to cover additional claims.

CLAIMS:

8. A data storage system comprising a distributed network of commercially available computers each of which comprising of
(1) cache managed software enabling a computer of the network to use cache memory in the other computers of the network; and
(2) translation software that translates format of data stored in cached memory of a computer in the network of the storage system into a format compatible with a data format of a computer using the storage system.

a1

9. The system of claim 8 wherein the cash management software includes a configuration manger which employs resources of an off-the-shelf file system.

10 The system of claim 9 wherein the file system provides management of names, access controls, and permissions for data files.

11. The system of claim 9 wherein the configuration manager includes a configuration file providing mapping between storage device names used by computers using the storage system and file names used by the storage system.

Sincerely,
Ilya Gertner

Ilya Gertner
Applicant Pro Se
President of Network Disk, Inc.
5 Gaslight Lane
Framingham, MA 01701
Tel: (603) 884-2005, (508) 872-4586

DocCode - SCORE

SCORE Placeholder Sheet for IFW Content

Application Number: 09236409 Document Date: 01/22/1999

The presence of this form in the IFW record indicates that the following document type was received in electronic format on the date identified above. This content is stored in the SCORE database.

Since this was an electronic submission, there is no physical artifact folder, no artifact folder is recorded in PALM, and no paper documents or physical media exist. The TIFF images in the IFW record were created from the original documents that are stored in SCORE.

- Drawing

At the time of document entry (noted above):

- USPTO employees may access SCORE content via DAV or via the SCORE web page.
- External customers may access SCORE content via PAIR using the Supplemental Content tab.

Best Available Copy

PTO/SB/10 (10-96)
Approved for use through 10/31/99. OMB 0651-0031
Patent and Trademark Office; U.S. DEPARTMENT OF COMMERCE
Under the Paperwork Reduction Act of 1995, no persons are required to respond to a collection of information unless it displays a valid OMB control number.

VERIFIED STATEMENT CLAIMING SMALL ENTITY STATUS (37 CFR 1.9(f) & 1.27(c))–SMALL BUSINESS CONCERN

Docket Number (Optional)

Applicant or Patentee: ILYA GERTNER
Application or Patent No.:
Filed or Issued: 1/15/99
Title: A DATA STORAGE SYSTEM COMPRISING A NETWORK OF PCS AND METHOD USING SAME

I hereby declare that I am
- [x] the owner of the small business concern identified below:
- [ ] an official of the small business concern empowered to act on behalf of the concern identified below:

NAME OF SMALL BUSINESS CONCERN NETWORK DISK, INC.

ADDRESS OF SMALL BUSINESS CONCERN 5 GASLIGHT LANE FRAMINGHAM, MA 01701

I hereby declare that the above identified small business concern qualifies as a small business concern as defined in 13 CFR 121.12, and reproduced in 37 CFR 1.9(d), for purposes of paying reduced fees to the United States Patent and Trademark Office, in that the number of employees of the concern, including those of its affiliates, does not exceed 500 persons. For purposes of this statement, (1) the number of employees of the business concern is the average over the previous fiscal year of the concern of the persons employed on a full-time, part-time, or temporary basis during each of the pay periods of the fiscal year, and (2) concerns are affiliates of each other when either, directly or indirectly, one concern controls or has the power to control the other, or a third party or parties controls or has the power to control both.

I hereby declare that rights under contract or law have been conveyed to and remain with the small business concern identified above with regard to the invention described in:

- [x] the specification filed herewith with title as listed above.
- [ ] the application identified above.
- [ ] the patent identified above.

If the rights held by the above identified small business concern are not exclusive, each individual, concern, or organization having rights in the invention must file separate verified statements averring to their status as small entities, and no rights to the invention are held by any person, other than the inventor, who would not qualify as an independent inventor under 37 CFR 1.9(c) if that person made the invention, or by any concern which would not qualify as a small business concern under 37 CFR 1.9(d), or a nonprofit organization under 37 CFR 1.9(e).

Each person, concern, or organization having any rights in the invention is listed below:
- [x] no such person, concern, or organization exists.
- [ ] each such person, concern, or organization is listed below.

Separate verified statements are required from each named person , concern or organization having rights to the invention averring to their status as small entities. (37 CFR 1.27)

I acknowledge the duty to file, in this application or patent, notification of any change in status resulting in loss of entitlement to small entity status prior to paying, or at the time of paying, the earliest of the issue fee or any maintenance fee due after the date on which status as a small entity is no longer appropriate. (37 CFR 1.28(b))

I hereby declare that all statements made herein of my own knowledge are true and that all statements made on information and belief are believed to be true; and further that these statements were made with the knowledge that willful false statements and the like so made are punishable by fine or imprisonment, or both, under section 1001 of Title 18 of the United States Code, and that such willful false statements may jeopardize the validity of the application, any patent issuing thereon, or any patent to which this verified statement is directed.

NAME OF PERSON SIGNING ILYA GERTNER

TITLE OF PERSON IF OTHER THAN OWNER PRESIDENT

ADDRESS OF PERSON SIGNING 5 GASLIGHT LN, FRAM, MA 01701

SIGNATURE Ilya Gertner DATE 1/15/99

As subscribed and sworn to before me on: Jan. 15, 1999
(Notary Public)
My commission expires: Jan. 31, 2003

Burden Hour Statement: This form is estimated to take 0.3 hours to complete. Time will vary depending upon the needs of the individual case. Any comments on the amount of time you are required to complete this form should be sent to the Chief Information Officer, Patent and Trademark Office, Washington, DC 20231. DO NOT SEND FEES OR COMPLETED FORMS TO THIS ADDRESS. SEND TO: Assistant Commissioner for Patents, Washington, DC 20231.

PATENT APPLICATION FEE DETERMINATION RECORD

Effective November 10, 1998

Application or Docket Number: 09/236409

CLAIMS AS FILED - PART I

FOR	NUMBER FILED (Column 1)	NUMBER EXTRA (Column 2)
BASIC FEE		
TOTAL CLAIMS	9 minus 20=	*
INDEPENDENT CLAIMS	3 minus 3 =	*
MULTIPLE DEPENDENT CLAIM PRESENT		

* If the difference in column 1 is less than zero, enter "0" in column 2

SMALL ENTITY TYPE ☐ RATE	FEE	OR	OTHER THAN SMALL ENTITY RATE	FEE
	380.00	OR		760.00
X$ 9=		OR	X$18=	
X39=		OR	X78=	
+130=		OR	+260=	
TOTAL	380	OR	TOTAL	

CLAIMS AS AMENDED - PART II

AMENDMENT A

	(Column 1) CLAIMS REMAINING AFTER AMENDMENT		(Column 2) HIGHEST NUMBER PREVIOUSLY PAID FOR	(Column 3) PRESENT EXTRA
Total	* 9	Minus	** 20	= —
Independent	* 3	Minus	*** 3	= —
FIRST PRESENTATION OF MULTIPLE DEPENDENT CLAIM				

SMALL ENTITY RATE	ADDITIONAL FEE	OR	OTHER THAN SMALL ENTITY RATE	ADDITIONAL FEE
X$ 9=	—	OR	X$18=	
X39=	—	OR	X78=	
+130=	—	OR	+260=	
TOTAL ADDIT. FEE	380.00	OR	TOTAL ADDIT. FEE	

AMENDMENT B

	(Column 1) CLAIMS REMAINING AFTER AMENDMENT		(Column 2) HIGHEST NUMBER PREVIOUSLY PAID FOR	(Column 3) PRESENT EXTRA
Total	* 11	Minus	** 20	= —
Independent	* 3	Minus	*** 3	= —
FIRST PRESENTATION OF MULTIPLE DEPENDENT CLAIM				

RATE	ADDITIONAL FEE	OR	RATE	ADDITIONAL FEE
X$ 9=		OR	X$18=	
X39=		OR	X78=	
+130=		OR	+260=	
TOTAL ADDIT. FEE		OR	TOTAL ADDIT. FEE	

AMENDMENT C

	(Column 1) CLAIMS REMAINING AFTER AMENDMENT		(Column 2) HIGHEST NUMBER PREVIOUSLY PAID FOR	(Column 3) PRESENT EXTRA
Total	* 11	Minus	** 20	=
Independent	* 3	Minus	*** 3	=
FIRST PRESENTATION OF MULTIPLE DEPENDENT CLAIM				

RATE	ADDITIONAL FEE	OR	RATE	ADDITIONAL FEE
X$ 9=		OR	X$18=	
X39=		OR	X78=	
+130=		OR	+260=	
TOTAL ADDIT. FEE		OR	TOTAL ADDIT. FEE	

* If the entry in column 1 is less than the entry in column 2, write "0" in column 3.
** If the "Highest Number Previously Paid For" IN THIS SPACE is less than 20, enter "20."
*** If the "Highest Number Previously Paid For" IN THIS SPACE is less than 3, enter "3."
The "Highest Number Previously Paid For" (Total or Independent) is the highest number found in the appropriate box in column 1.

Google Exhibit 1002
Google v. LS Cloud Storage Technologies
IPR2023-00777, Page 212 of 280

PATENT APPLICATION SERIAL NO. 09-236409

U.S. DEPARTMENT OF COMMERCE
PATENT AND TRADEMARK OFFICE
FEE RECORD SHEET

02/03/1999 AHAYES 00000002 09236409
01 FC:201 380.00 OP

PTO-1556
(5/87)

*U.S. GPO: 1998-433-214/80404

SERIAL NUMBER	FILING DATE	CLASS	GROUP ART UNIT	ATTORNEY DOCKET NO.
09/236,409	01/22/99	711	~~2751~~ 2187	

APPLICANT

ILYA GERTNER, FRAMINGHAM, MA.

CONTINUING DOMESTIC DATA********
VERIFIED

NPV

371 (NAT'L STAGE) DATA********
VERIFIED

NPV

*FOREIGN APPLICATIONS**********
VERIFIED

NPV

FOREIGN FILING LICENSE GRANTED 02/11/99 ***** SMALL ENTITY *****

Foreign Priority claimed 35 USC 119 (a-d) conditions met Verified and Acknowledged	STATE OR COUNTRY	SHEETS DRAWING	TOTAL CLAIMS	INDEPENDENT CLAIMS
☐yes ☑no ☐yes ☑no ☐Met after Allowance Examiner's Initials ____ Initials ____	MA	13	9	3

ADDRESS

ILYA GERTNER
NETWORK DISK INC
5 GASUGHT LANE
FRAMINGHAM MA 01701

TITLE

DATA STORAGE SYSTEM COMPRISING A NETWORK OF PCS AND METHOD USING SAME

FILING FEE RECEIVED

FEES: Authority has been given in Paper No. _____ to charge/credit DEPOSIT ACCOUNT NO. _____ for the following:

- ☐ All Fees
- ☐ 1.16 Fees (Filing)
- ☐ 1.17 Fees (Processing Ext. of time)
- ☐ 1.18 Fees (Issue)
- ☐ Other
- ☐ Credit

Google Exhibit 1002
Google v. LS Cloud Storage Technologies
IPR2023-00777, Page 214 of 280

In The United States Patent and Trademark Office

JC542 U.S. PTO
09/236409
01/22/99

HONORABLE COMMISSIONER
OF PATENTS AND TRADEMARKS
Washington, D.C. 20231

Dear Sir:

Information Disclosure Statement of Data Storage System Comprising a Network of PCs and Method Using Same

by Ilya Gertner

Pursuant to the guidelines for Information Disclosure Statements set forth in 37 C.F.R. Sections 1.97-1.99 and MPEP Section 609, Applicant(s) submit(s) herewith patents, publications or other information of which he/she/they is/are aware, which is believed to may be material to the examination of this application and in respect of which there may be a duty of disclosure in accordance with 37 CFR 1.56.

A list of patent(s) and/or publication(s) is set forth on the attached Form "Information Disclosure Statement by Applicant." A copy of each item listed is supplied herewith.

U.S. Pat. No, 5,717,884, Gzym, et. al., Method and apparatus for cache management, Feb 2, 1996, U.S. Pat. No .5,819,310, by Vishlitzky, et. al., Method and apparatus for reading data from mirrored logical volumes on physical disk drivers, Oct 6, 1998, U.S. Pat. No, 5,787,473, by Ofek, et. al., Cache management system using time stamping for replacement queue, July 29, 1998, U.S.Pat. No, 5,751,993, Ofek, et. al., Cache management systems, May 12, 1998, U.S. Pat. No, 5,600,817, Macon Jr., et. al., Asynchronous read-ahead disk caching using multiple disk I/O processes and dynamically variable prefetch length, Feb 4, 1997, U.S. Pat. No, 5,758,050, Brady, et. al., Reconfigurable data storage system, May 26, 1998, U.S. Pat. No, 5,748,985, by Kanai, et. al., Cache control method and cache controller, May 5, 1998, U.S. Pat. No, 5,743,933, by Kijima, et. al., Rotary memory storage device with cache control method and apparatus, Apr 21, 1998, U.S. Pat. No, 5,854,942, Penokie, December 29, 1998, Method and system for automatic storage subsystem configuration, U.S. Pat. No, 5,860,137, Raz, et. al., January 12, 1999, Dynamic load balancing, disclosure channel attached data storage systems and methods but do not include network attached storage systems.

U.S. Pat. No, 5,819,292, Hitz, et. al., Oct, 6, 1998, Method for maintaining consistent states of a file system and for creating user-accessible read-only copies of a file system, U.S. Pat. No, 5,649,152, Ohran, et. al., Method and system for providing static snapshot of data stored on a mass storage system, U.S. Pat. No, 5,644,751, Burnett, et. al., July 1, 1997, Distributed file system (DFS) cache management system based on file access characteristics, U.S. Pat. No, 5,701,516, Chen, et. al., Dec 23. 1997, High-

performance non-volatile RAM protected write cache accelerator system employing DMA and data transferring scheme, U.S. Pat. No, 5,860,026, Kitta, et. al., January 12, 1999, Information processing system for controlling instructions issues from a cluster, disclosure network attached storage systems but do not include channel attached storage systems.

U.S. Pat. No, 5,742,792, Yanai, et. al., April 21, 1998, Remote data mirroring, disclosure a pair of storage systems connected via T1 or T3 dedicated point-to-point connections for very specific task of data mirroring. but provide no support for inexpensive and standard LAN hardware and software protocols for connecting storage systems. U.S. Path. No, 5,852,715, et. al., December 22, 1998, System for concurrently updating database by one host and reading the database by different host for the purpose of implementing decision support functions. However, the above systems use very expensive dedicated communication links. Furthermore, the above systems are limited to the primary node sending write requests to the secondary node.

U.S. Pat. No, 5,805,857, Colegrove September 8, 1998, DASD capacity in excess of 528 megabytes apparatus and method for personal computers, U.S. Pat. No, 5,802,553, Robinson, et. al., September 1, 1998, File system configured to support variable density storage and data compression within a nonvolatile memory, U.S. Pat. No, 5,715,455, Macon, Jr., et. al., February 3, 1998, Apparatus and method for storing file allocation table efficiently in memory, disclosure methods for implemented date storage in personal computer systems. However, the above systems are limited providing storage in said personal computer systems and do not provide storage support for large system connected via I/O channels to personal computer systems. U.S. Pat. No, 5,790,795, Hough, August 4, 1998, Media server system which employs a SCSI bus and which utilizes SCSI logical units to differentiate between transfer modes, disclosures a media server that supports different file systems on different SCSI channels, however the system above is limited to a video data and does not support network attached hosts.

U.S. Pat. No, Lomelino, et. al., December 8, 1998, Secondary channel for command information for fibre channel system interface bus, U.S. Pat. No, 5,841,997, Bleiwess, et. al., November 24, 1998, Apparatus for effecting port switching of fibre channel loops, U.S. Pat., No, 5,828,475, Bennett, et. al., October 27, 1998, Bypass switching and messaging mechanism for providing intermix fiber optic switch using a bypass bus and buffer, disclosures methods that connect disks and controllers. SSA industry association defines another standard for fiber channel network connecting devices and computers. However, the problems remain in software, solution of which require methods described in the preferred embodiment of the present invention

Research papers, Cache Memories, by Smith, Computer Surveys, Vol. 14, No. 3, Sep, 1982, Caching Strategies to Improve Disk System Performance, by Karedla, et. al., Computer, Vol. 27, No. 3, March, 1994 catalogue a number of different approaches to managing data structures and algorithms for cache memory-based storage systems. Industry white papers, Data Sharing, by Neema, Storage Management Solutions, Vol. 3, No. 3, May, 1998, Storage management in UNIX environments: challenges and solutions,

by Jerry Hoetger, Storage Management Solutions, Vol. 3, No. 4, survey a0 number of approaches to commercial storage systems and data sharing. However, existing storage systems are limited when applied to support multiple platform systems.

While this Information Disclosure Statement may be "material" pursuant to 37 CFR 1.56, it is not intended to constitute an admission that any patent, publication or other information referred to therein is "prior art" for this invention unless specifically designated as such.

Respectfully submitted,

NAME: Ilya Gertner

ADDRESS:

Ilya Gertner
5 Gaslight Lane
Framingham, MA 01701

JC542 U
09/2364
01/22/99

Class	Subclass
711	141

ISSUE CLASSIFICATION

6549988

6549988

U.S. UTILITY PATENT APPLICATION

O.I.P.E. PD	PATENT DATE
SCANNED AG.S Q.A. NC	APR 15 2003

SECTOR	CLASS	SUBCLASS	ART UNIT	EXAMINER
	711	141	2471	Thao [illegible]

FILED WITH: ☐ DISK (CRF) ☒ FICHE
(Attached in pocket on right inside flap)

PREPARED AND APPROVED FOR ISSUE

ISSUING CLASSIFICATION

ORIGINAL		CROSS REFERENCE(S)						
CLASS	SUBCLASS	CLASS	SUBCLASS (ONE SUBCLASS PER BLOCK)					
711	141	711	142	143	147	148		
INTERNATIONAL CLASSIFICATION								
G06F	17/30							
	/							
	/							
	/							
	/							

☐ Continued on Issue Slip Inside File Jacket

☐ TERMINAL DISCLAIMER	DRAWINGS			CLAIMS ALLOWED	
	Sheets Drwg.	Figs. Drwg.	Print Fig.	Total Claims	Print Claim for O.G.
	13	13	1	6	1

☐ a) The term of this patent subsequent to _____ (date) has been disclaimed.

(Assistant Examiner) (Date)

NOTICE OF ALLOWANCE MAILED: 12-3-02

☐ b) The term of this patent shall not extend beyond the expiration date of U.S Patent. No. _____

T. V. Nguyen 11/26/02
(Primary Examiner) (Date)

ISSUE FEE

Amount Due	Date Paid
$640.00	2-27-03

☐ c) The terminal ____ months of this patent have been disclaimed.

Everett Willeson 12-2-02
(Legal Instruments Examiner) (Date)

ISSUE BATCH NUMBER

WARNING:
The information disclosed herein may be restricted. Unauthorized disclosure may be prohibited by the United States Code Title 35, Sections 122, 181 and 368. Possession outside the U.S. Patent & Trademark Office is restricted to authorized employees and contractors only.

Form PTO-436A
(Rev. 6/98)

ISSUE FEE IN FILE

(LABEL AREA)

Formal Drawings (___ sht) set

(FACE)

IF 1439F RET 268528554-000002 SP RT ID: VI
M -47-01-2-ZZ-0005-3-01-03 0103203958
SKP:RF048337236-00002 CUST:RF048337236
6549988 Srv: 04/26 9:00am EDT For: Thomps:
RECORDS MANAGEMENT
R HALF

Google v. LS Cloud S
IPR2023-007

SEARCHED

Class	Sub.	Date	Exmr.
711	3. 117-126 141-146 147, 148 152.	11/13/00	NOV
Update		6/17/02	NOV
711	3, 117-126 141-148	11/26/02	NOV

INTERFERENCE SEARCHED

Class	Sub.	Date	Exmr.
711	3, 117-126 141-148	11/26/02	NOV

SEARCH NOTES
(INCLUDING SEARCH STRATEGY)

	Date	Exmr.
STN search	11/9/00	NOV
West search		
West	11/26/02	NOV

(RIGHT OUTSIDE)

Google Exhibit 1002
Google v. LS Cloud Storage Technologies
IPR2020-00777, Page 210 of 300

ISSUE SLIP STAPLE AREA (for additional cross references)

POSITION	INITIALS	ID NO.	DATE
FEE DETERMINATION	A.H.	72192	2/2/99
O.I.P.E. CLASSIFIER		[illegible]	2/5
FORMALITY REVIEW	M.M.	71620	2.11.99

INDEX OF CLAIMS

✔ ..... Rejected
= ..... Allowed
— (Through numeral)... Canceled
÷ ..... Restricted
N ..... Non-elected
I ..... Interference
A ..... Appeal
O ..... Objected

Claim Final	Claim Original	Date			
1	1	11/13/98	5/18/02	11/23/02	
5	2	✓	✓	✓	
6	3	✓	✓		
2	4	✓	✓	=	
1	5	✓	✓	✓	
	6				
	7				
	8				
	9				
	10				
4	11	✓	✓	✓	
3	12			=	
4	13			=	
	14				
	15				
	16				
	17				
	18				
	19				
	20				
	21				
	22				
	23				
	24				
	25				
	26				
	27				
	28				
	29				
	30				
	31				
	32				
	33				
	34				
	35				
	36				
	37				
	38				
	39				
	40				
	41				
	42				
	43				
	44				
	45				
	46				
	47				
	48				
	49				
	50				

Claim Final	Claim Original	Date
	51	
	52	
	53	
	54	
	55	
	56	
	57	
	58	
	59	
	60	
	61	
	62	
	63	
	64	
	65	
	66	
	67	
	68	
	69	
	70	
	71	
	72	
	73	
	74	
	75	
	76	
	77	
	78	
	79	
	80	
	81	
	82	
	83	
	84	
	85	
	86	
	87	
	88	
	89	
	90	
	91	
	92	
	93	
	94	
	95	
	96	
	97	
	98	
	99	
	100	

Claim Final	Claim Original	Date
	101	
	102	
	103	
	104	
	105	
	106	
	107	
	108	
	109	
	110	
	111	
	112	
	113	
	114	
	115	
	116	
	117	
	118	
	119	
	120	
	121	
	122	
	123	
	124	
	125	
	126	
	127	
	128	
	129	
	130	
	131	
	132	
	133	
	134	
	135	
	136	
	137	
	138	
	139	
	140	
	141	
	142	
	143	
	144	
	145	
	146	
	147	
	148	
	149	
	150	

If more than 150 claims or 10 actions staple additional sheet here

(LEFT INSIDE)

Best Available Copy

PTO/SB/17 (10-96)
Approved for use through 9/30/98. OMB 0651-0032
Patent and Trademark Office: U.S. DEPARTMENT OF COMMERCE

Under the Paperwork Reduction Act of 1995, no persons are required to respond to a collection of information unless it displays a valid OMB control number.

FEE TRANSMITTAL

TOTAL AMOUNT OF PAYMENT ($)

Complete if Known	
Application Number	
Filing Date	
First Named Inventor	
Group Art Unit	
Examiner Name	
Attorney Docket Number	

METHOD OF PAYMENT (check one)

1. ☐ The Commissioner is hereby authorized to charge indicated fees and credit any over payments to:

Deposit Account Number

Deposit Account Name

☐ Charge Any Additional Fee Required Under 37 CFR 1.16 and 1.17

☐ Charge the Issue Fee Set in 37 CFR 1.18 at the Mailing of the Notice of Allowance, 37 CFR 1.311(b)

2. ☑ Payment Enclosed:
☑ Check ☐ Money Order ☐ Other

FEE CALCULATION (fees effective 10/01/96)

1. FILING FEE

Large Entity Fee Code	Large Entity Fee ($)	Small Entity Fee Code	Small Entity Fee ($)	Fee Description	Fee Paid
101	770	201	385	Utility filing fee	386
106	320	206	160	Design filing fee	—
107	530	207	265	Plant filing fee	—
108	770	208	385	Reissue filing fee	—
114	150	214	75	Provisional filing fee	—

SUBTOTAL (1) ($) 386

2. CLAIMS

		Extra	Fee from below	Fee Paid
Total Claims	9 -20 =		X	=
Independent Claims	3 - 3 =		X	=
Multiple Dependent Claims			X	=

Large Entity Fee Code	Large Entity Fee ($)	Small Entity Fee Code	Small Entity Fee ($)	Fee Description
103	22	203	11	Claims in excess of 20
102	80	202	40	Independent claims in excess of 3
104	260	204	130	Multiple dependent claim
109	80	209	40	Reissue independent claims over original patent
110	22	210	11	Reissue claims in excess of 20 and over original patent

SUBTOTAL (2) ($) —

FEE CALCULATION (continued)

3. ADDITIONAL FEES

Large Entity Fee Code	Large Entity Fee ($)	Small Entity Fee Code	Small Entity Fee ($)	Fee Description	Fee Paid
105	130	205	65	Surcharge - late filing fee or oath	
127	50	227	25	Surcharge - late provisional filing fee or cover sheet.	
139	130	139	130	Non-English specification	
147	2,460	147	2,460	For filing a request for reexamination	
112	900*	112	900*	Requesting publication of SIR prior to Examiner action	
113	1,790*	113	1,790*	Requesting publication of SIR after Examiner action	
115	110	215	55	Extension for response within first month	
116	390	216	195	Extension for response within second month	
117	930	217	465	Extension for response within third month	
118	1,470	218	735	Extension for response within fourth month	
119	300	219	150	Notice of Appeal	
120	300	220	150	Filing a brief in support of an appeal	
121	260	221	130	Request for oral hearing	
138	1,470	138	1,470	Petition to institute a public use proceeding	
140	110	240	55	Petition to revive unavoidably abandoned application	
141	1,290	241	645	Petition to revive unintentionally abandoned application	
142	1,290	242	645	Utility issue fee (or reissue)	
143	440	243	220	Design issue fee	
144	650	244	325	Plant issue fee	
122	130	122	130	Petitions to the Commissioner	
123	50	123	50	Petitions related to provisional applications	
126	230	126	230	Submission of Information Disclosure Stmt	
581	40	581	40	Recording each patent assignment per property (times number of properties)	
146	770	246	365	Filing a submission after final rejection (37 CFR 1.129(a))	
149	770	249	385	For each additional invention to be examined (37 CFR 1.129(b))	
Other fee (specify)					
Other fee (specify)					

SUBTOTAL (3) ($) —

* Reduced by Basic Filing Fee Paid

SUBMITTED BY				Complete (if applicable)	
Typed or Printed Name	ILYA GERTNER,			Reg. Number	
Signature	Ilya Gertner	Date	1/8/98	Deposit Account User ID	

Burden Hour Statement: This form is estimated to take 0.2 hours to complete. Time will vary depending upon the needs of the individual case. Any comments on the amount of time you are required to complete this form should be sent to the Chief Information Officer, Patent and Trademark Office, Washington, DC 20231. DO NOT SEND FEES OR COMPLETED FORMS TO THIS ADDRESS. SEND TO: Assistant Commissioner for Patents, Washington, DC 20231.

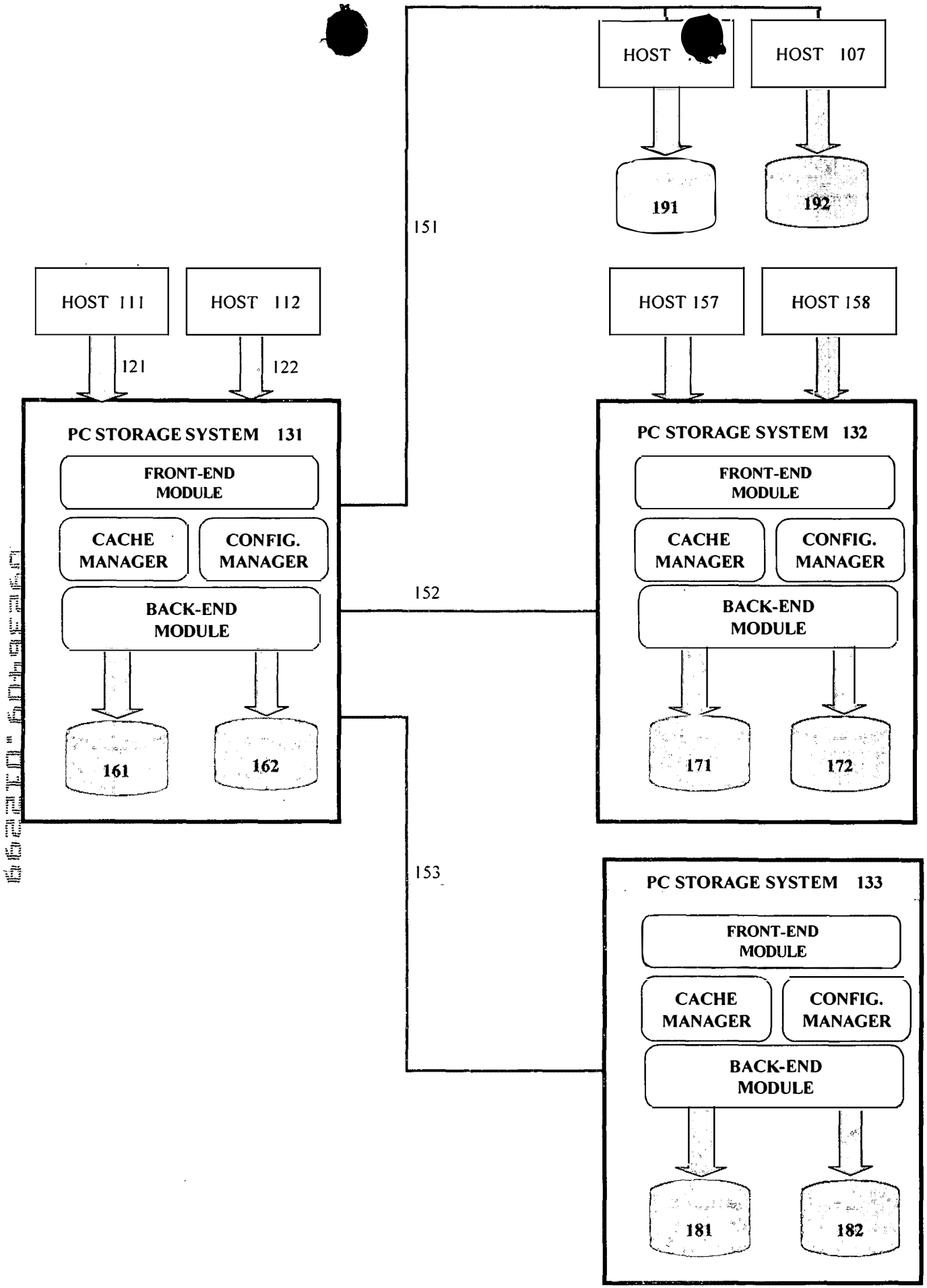

Figure 1. Data Storage System Configurations

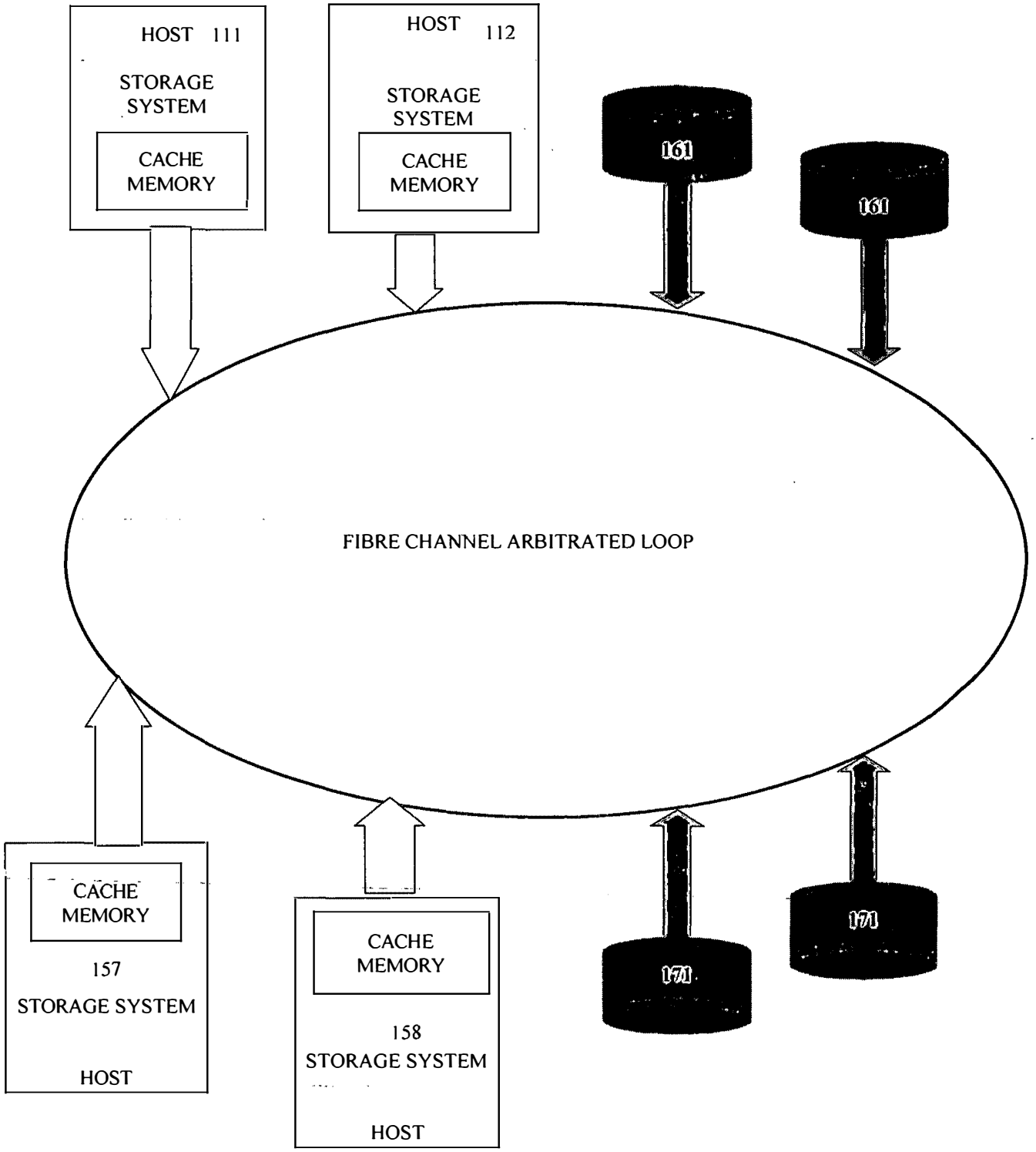

FIG. 2 FIBRE CHANNEL ARBITRATED LOOP FOR (FCAL)

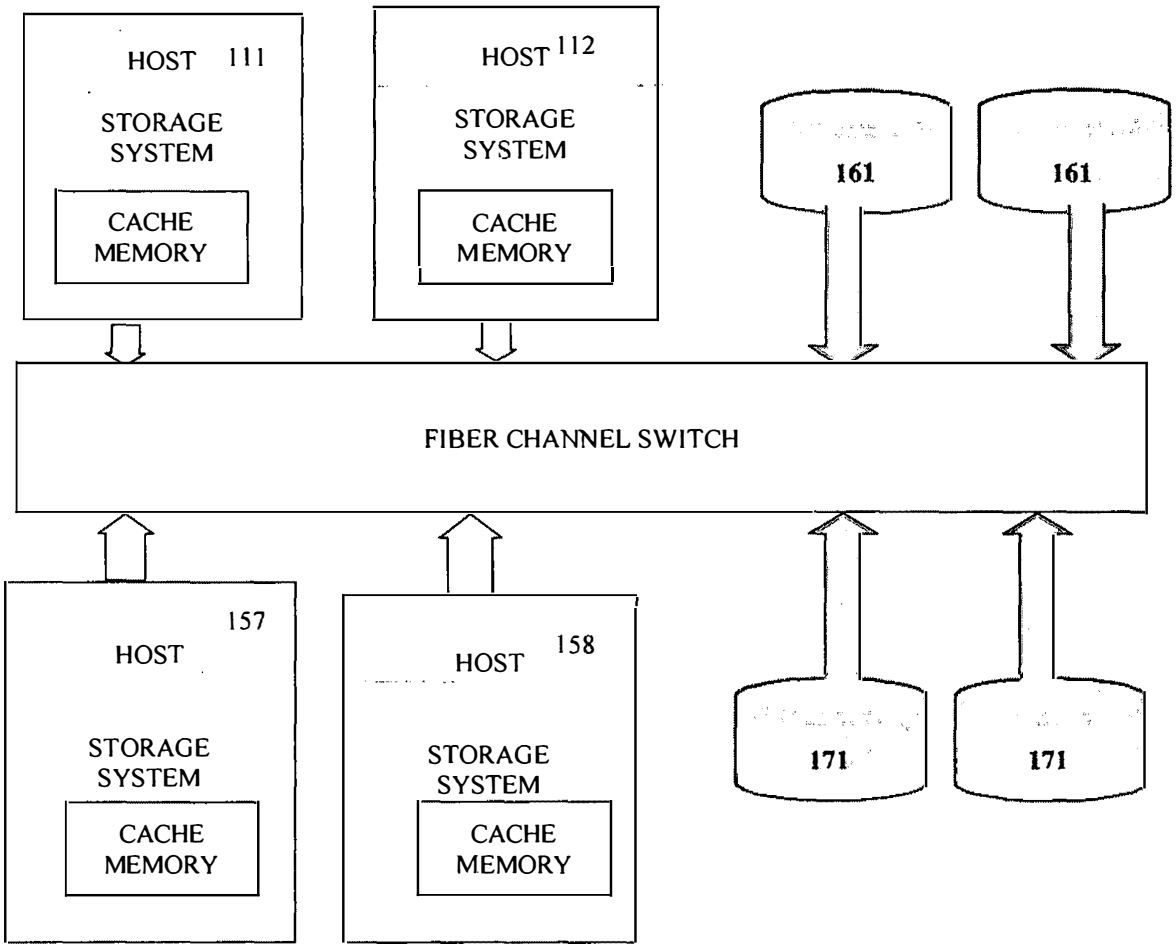

FIG. 2A FIBER CHANNEL SWITCH

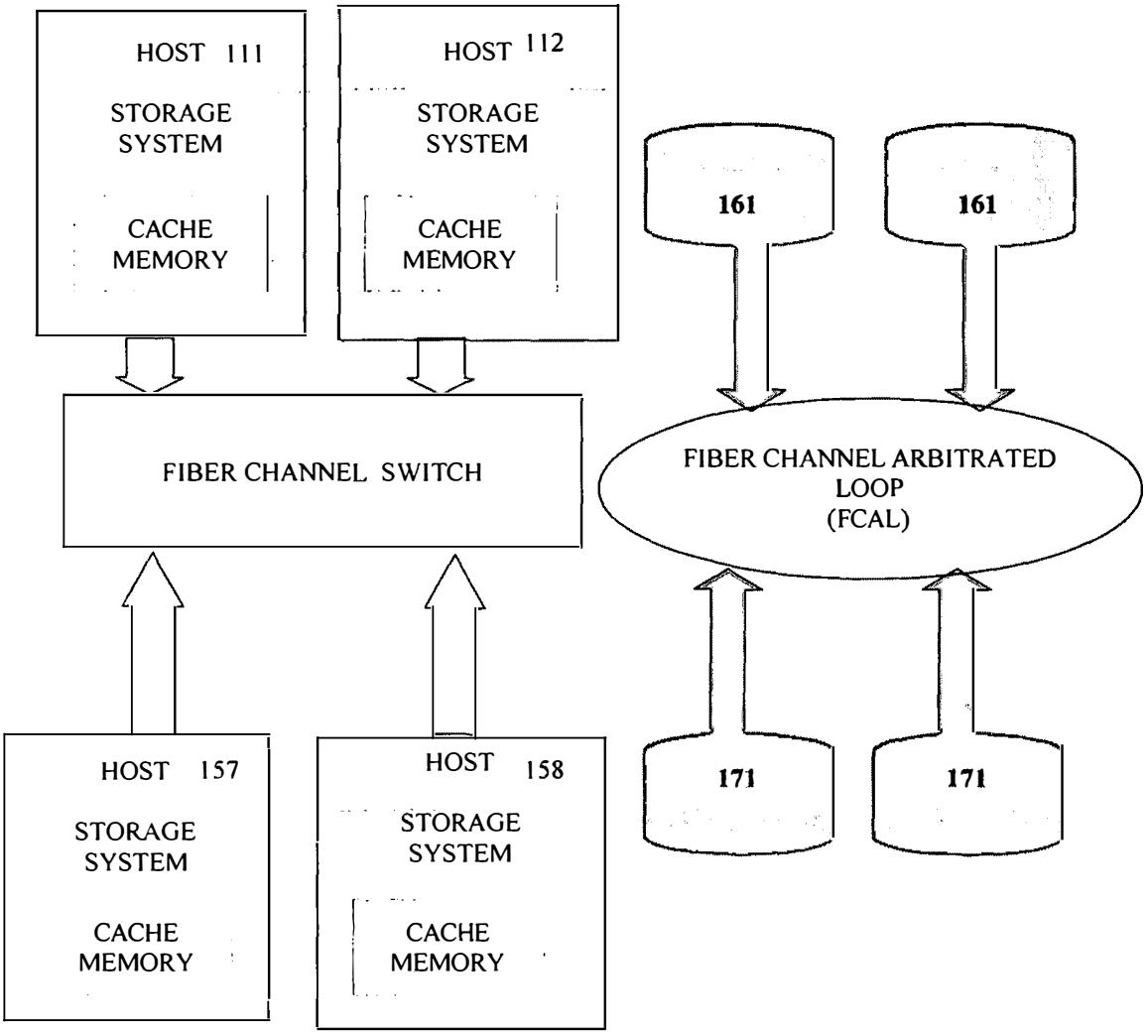

FIG. 2B FIBER CHANNEL SWITCH FOR HOST COMPUTERS AND FIBRE CHANNEL ARBITRATED LOOP FOR STORAGE

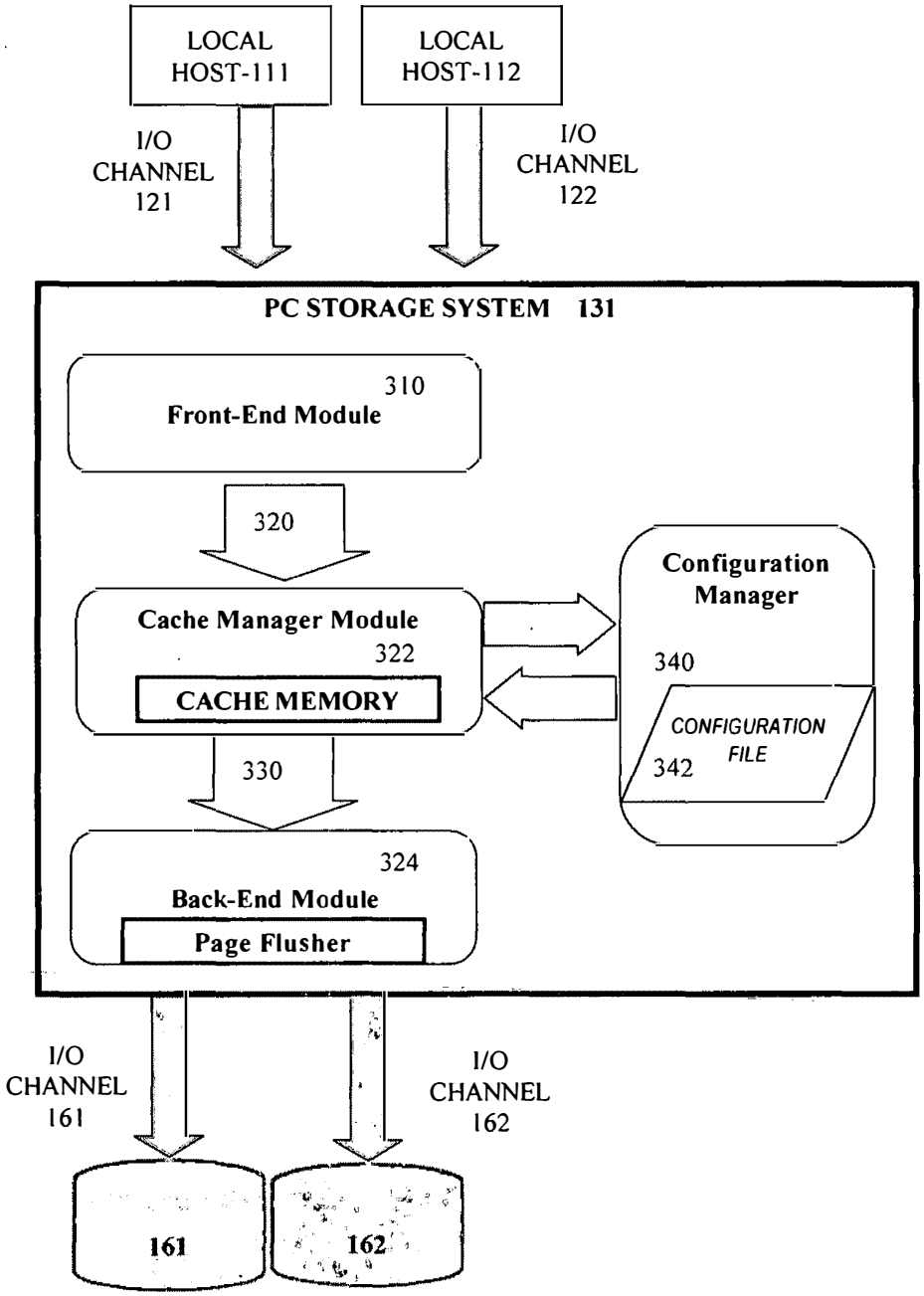

FIG. 3 PC STORAGE SYSTEM.

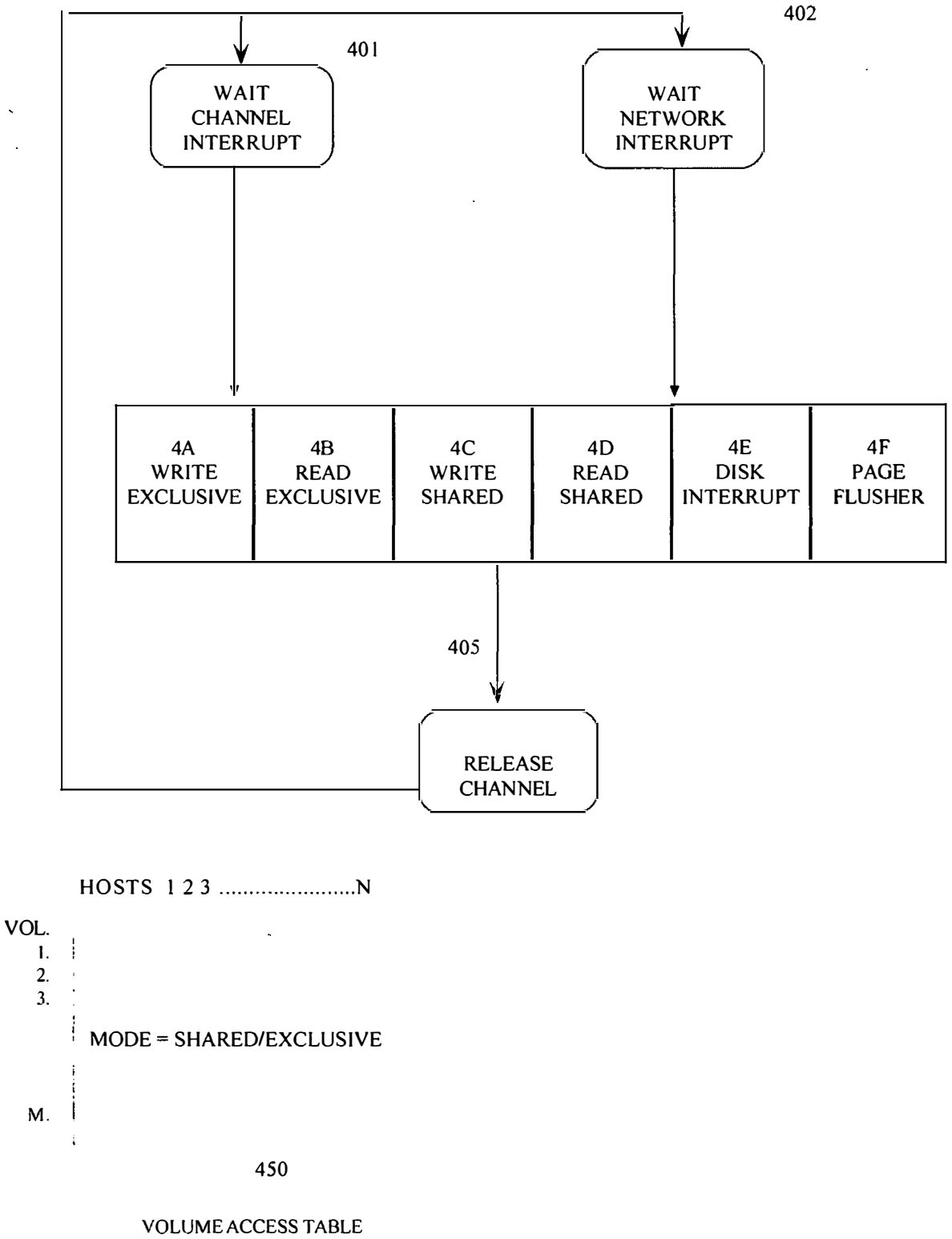

FIG. 4 READ/WRITE FLOWCHART OVERVIEW

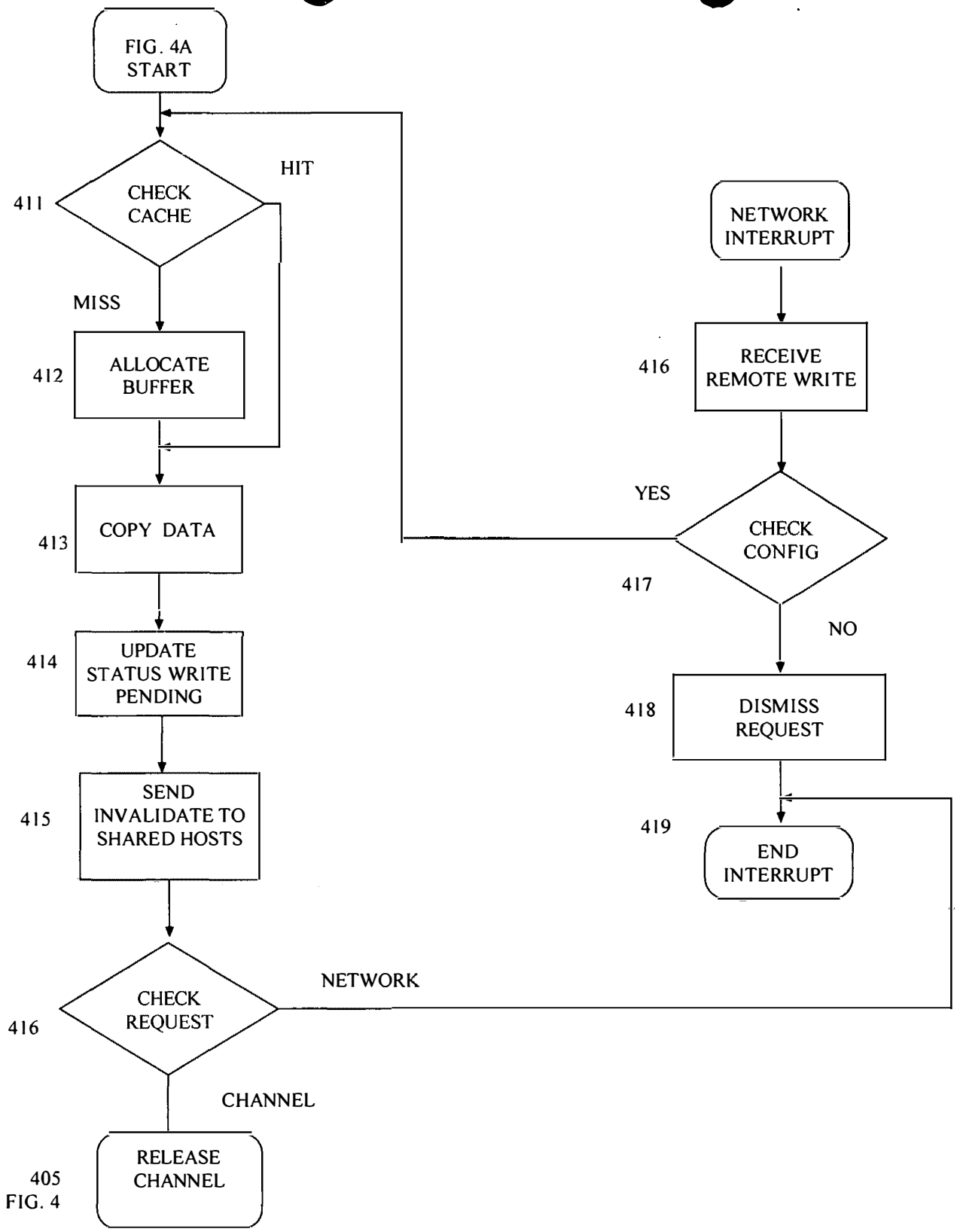

FIG. 4A WRITE EXCLUSIVE

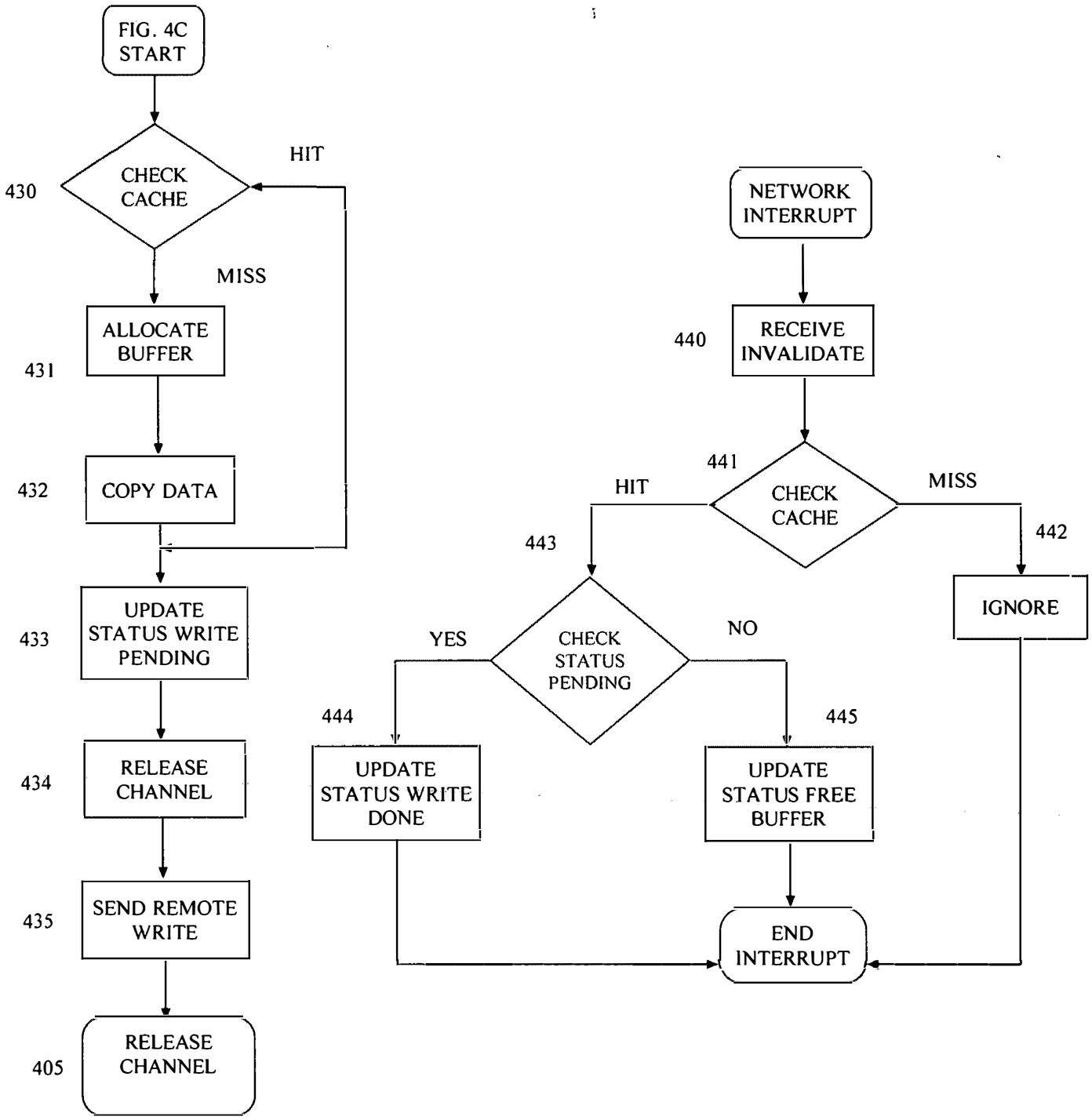

FIG. 4C WRITE SHARED

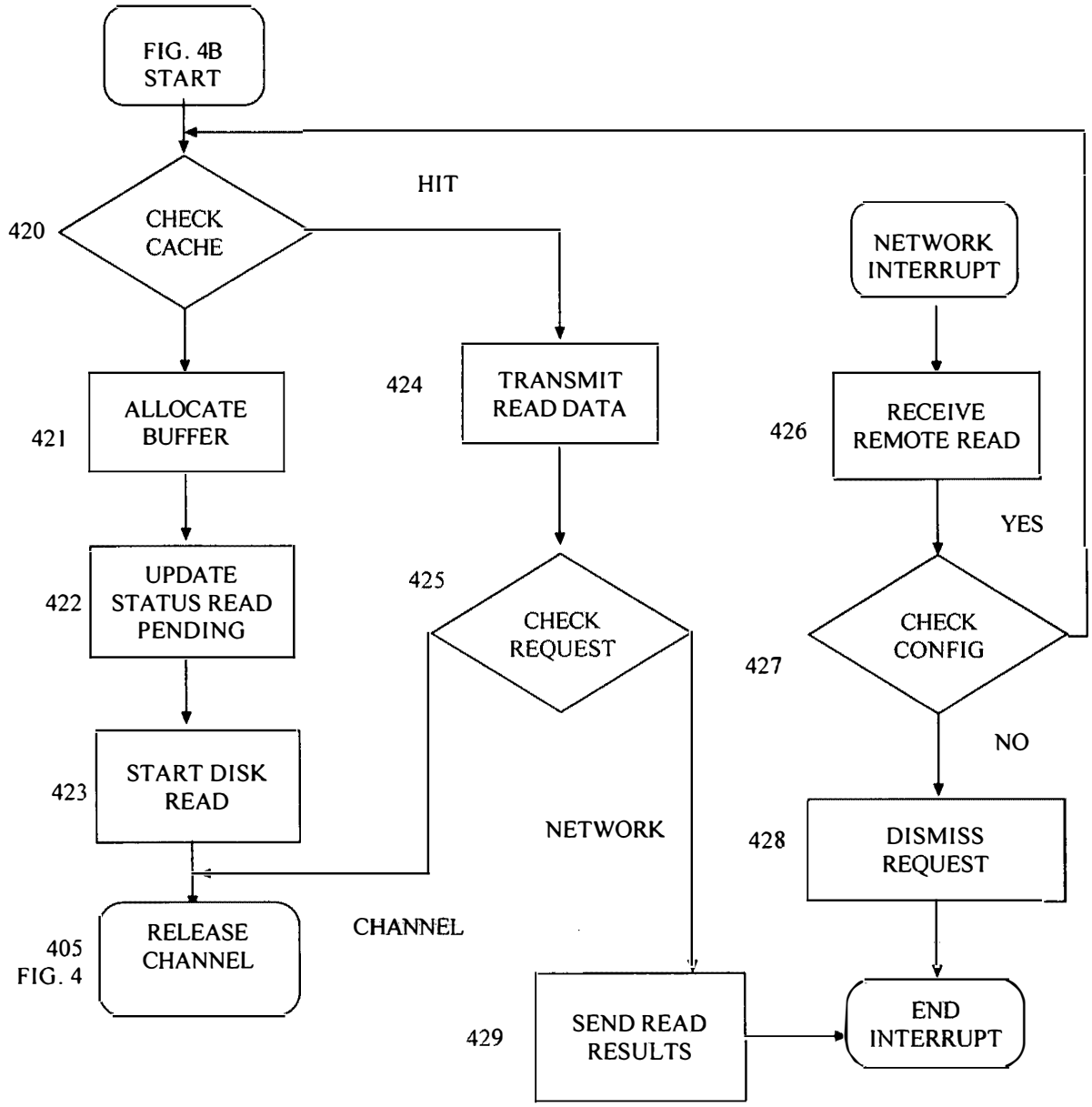

FIG. 4B READ EXCLUSIVE

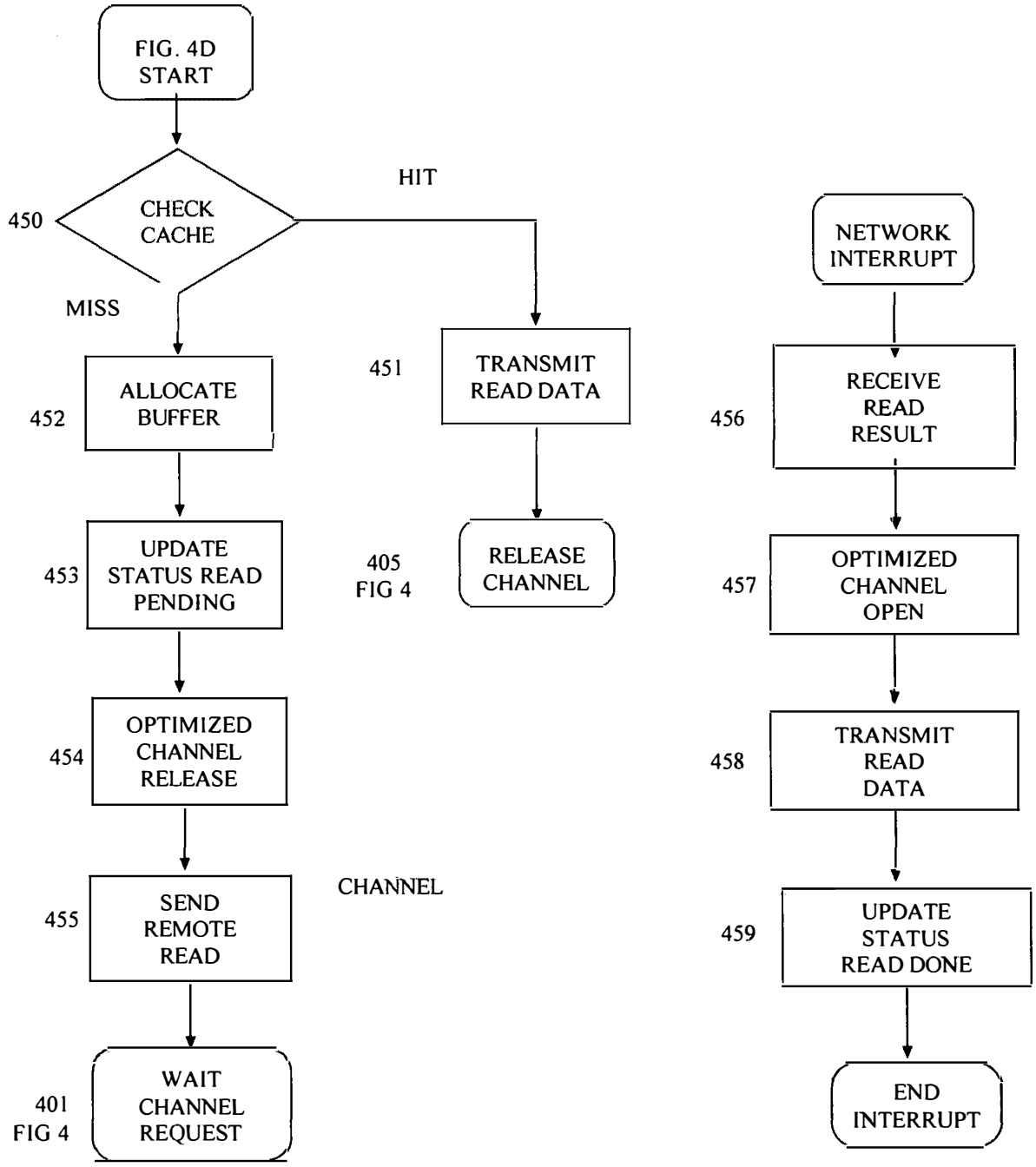

FIG. 4D READ SHARED

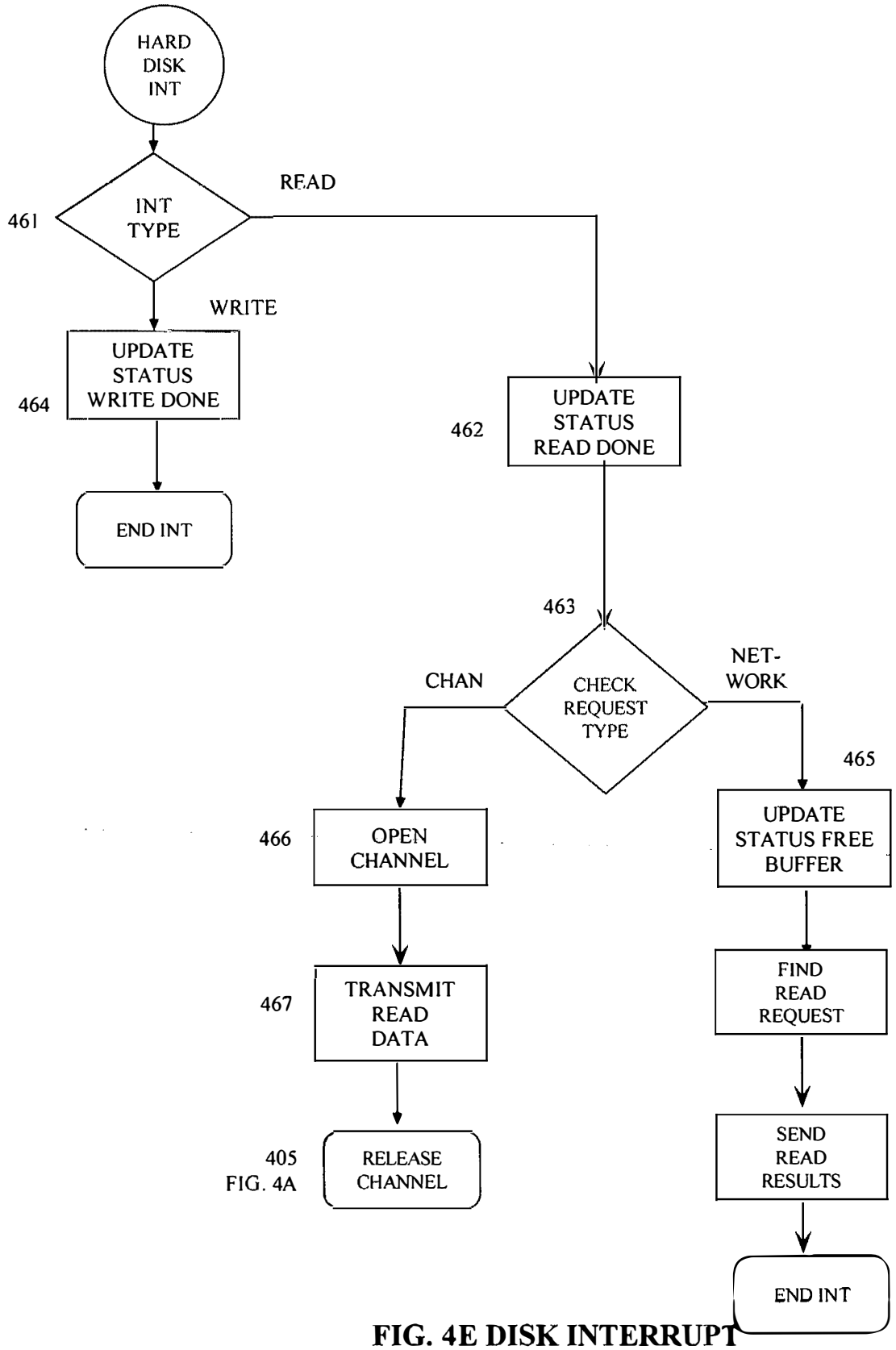

FIG. 4E DISK INTERRUPT

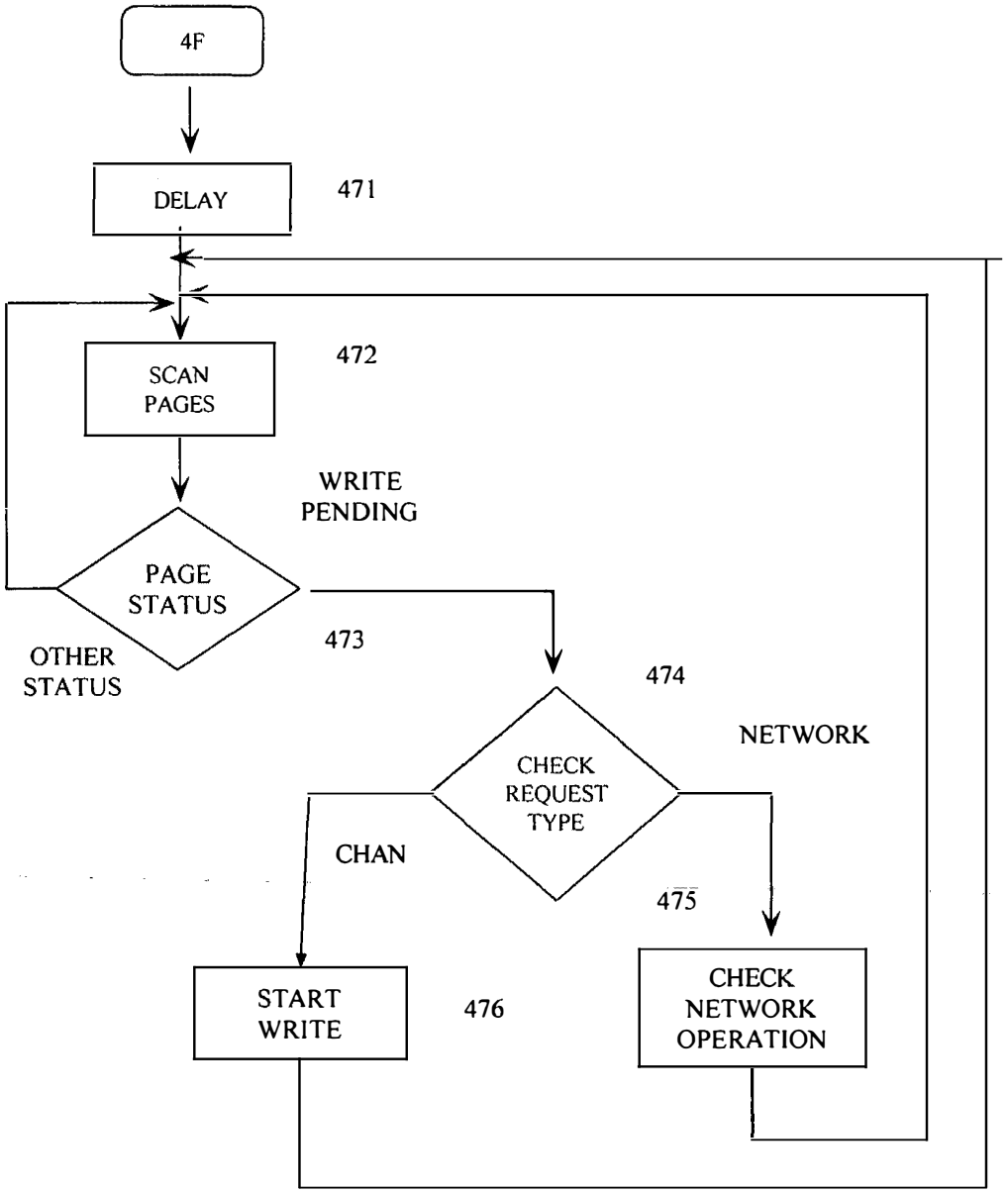

FIG. 4F MEMORY FLUSHER

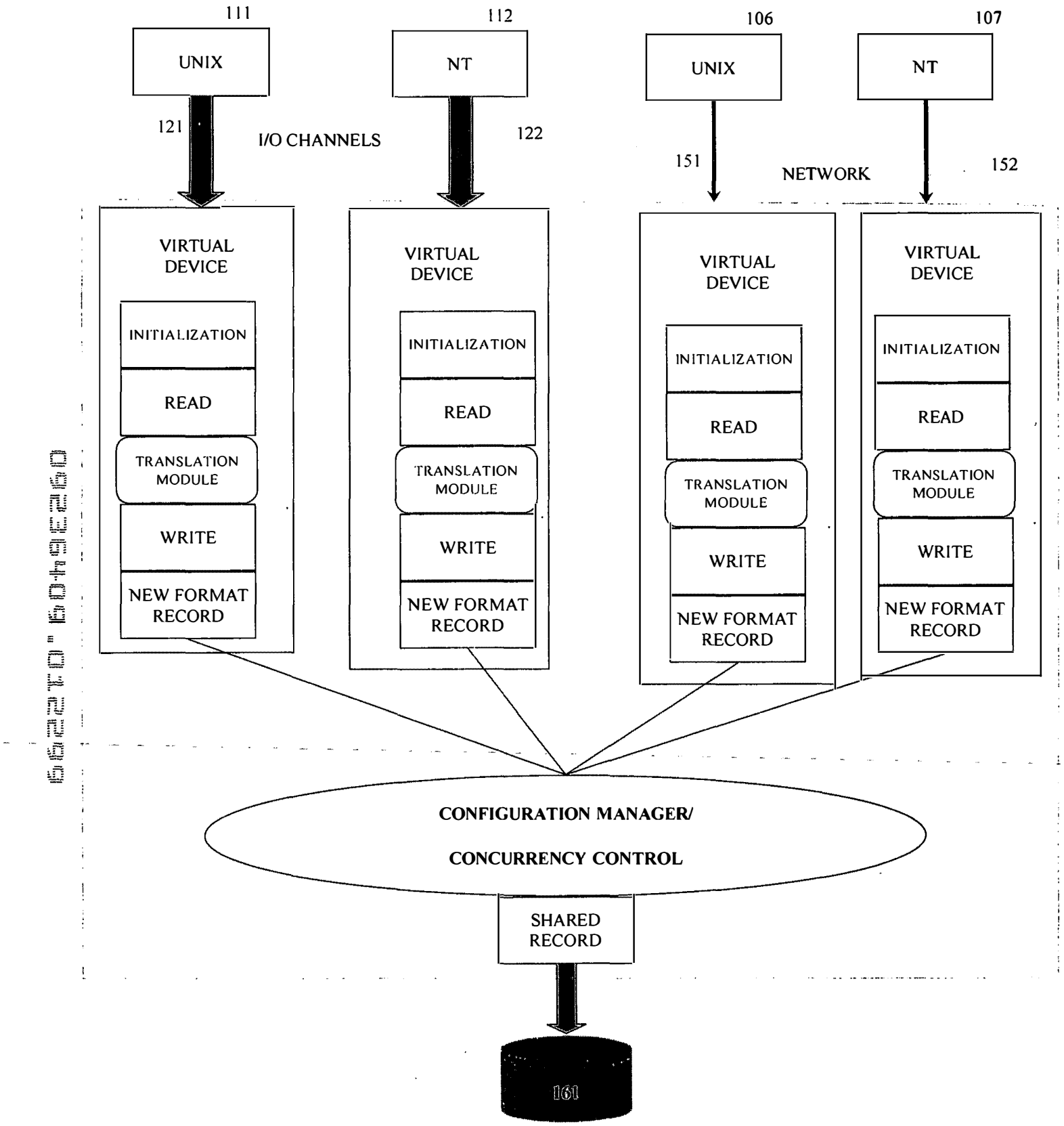

FIG. 5 DATA SHARING

A Data Storage System Comprising a Network of PCs and Method Using Same

Background of the Invention

1.The Field of the Invention

This invention relates generally to the field of cached data storage systems and more particularly to a data storage system that permits independent access from local hosts connected via I/O channels and independent access from remote hosts and remote storage systems connected via network links. A network of PCs permits building a high-performance, scalable, data storage system using off-the-shelf components at reduced cost. A configuration manager ensures consistency of data stored in the distributed cache.

2. Description of Related Art

A typical data processing system generally involves a cached data storage system that connects to local host computers via I/O channels or remote host computers via network links. The purpose of the data storage system is to improve the performance of applications running on the host computer by offloading I/O processing from the host to the data storage system. The purpose of the cache memory in a data storage system is to further improve the performance of the applications by temporarily storing data buffers in the cache so that the references to those buffers can be resolved efficiently as "cache hits". Reading data from a cache is an order of magnitude faster than reading data from a back end storage device such as a disk. Writing data to a cache is also an order of magnitude faster than writing to a disk. All writes are cache hits because data is simply copied into cache buffers that are later flushed to disks.

Prior art data storage systems are implemented using proprietary hardware and very low-level, frequently referred to as microcode, software resulting in expensive and not portable systems. In contrast to the prior art systems, the preferred embodiment of the present invention uses standard hardware and software components. A network of commercial PCs is used to implement a high-performance data storage system. A method using the network of PCs includes an algorithm for a configuration manager that manages access to the distributed cache memory stored in PCs interconnected by the network.

Numerous prior art systems and methods exist for managing cache memory in a data storage system. The prior art has suggested several methods for managing cache for channel attached hosts. U.S.Pat. No, 5,717,884, Gzym, et. al., Feb 2, 1996, Method and Apparatus for Cache Management, disclosures data structures and algorithms that use a plurality of slots, each of which is used to store data files. U.S. Pat. No, 5,757,473, Vishlitzky, et. al., Cache Management system using time stamping for replacement queue, Jul 28, 1998, disclosures a method that uses time stamps to manage queues in a cached data storage system. U.S.Pat. No, 5,751,993, Ofek, et. al., May 12, 1998, Cache Management Systems, disclosures yet another aspect in queue management algorithms.

U.S. Pat. No, 5,600,817, Macon Jr., et. al., Feb. 4, 1997, Asynchronous read-ahead disk caching using multiple disk I/O processes and dynamically variable prefetch length, disclosures read-ahead methods in cached storage systems. U.S. Pat. No, 5,758,050, Brady, et. al., May 26, 1998, Reconfigurable data storage system, disclosures a method for reconfiguring a data storage system.

However, the above systems use very specialized embedded operating systems and custom programming in a very low-level programming language such as assembler. The obvious drawback of the above systems is high cost because assembler-level programming is very time consuming. Another drawback is inflexibility and lack of functionality. For example, some features such as reconfigurability in data storage are very limited in proprietary embedded systems when compared to general purpose operating systems. Finally, networking support is very expensive and limited because it relies on dedicated communication links such as T1, T3 and ESCON.

One prior art system using networking of data storage systems is disclosed in U.S. Pat. No, 5,742,792, Yanai, et. al., April 21, 1998, Remote Data Mirroring. This patent disclosures a primary data storage system providing storage services to a primary host and a secondary data storage system providing services to a secondary host. The primary storage system sends all writes to the secondary storage system via IBM ESCON, or optionally via T1 or T3 communications link. The secondary data storage system provides a backup copy of the primary storage system. Another prior art system is disclosed in. U.S. Pat. No, 5,852,715, Raz , et al., December 22, 1998, System for currently updating database by one host and reading the database by different host for the purpose of implementing decision support functions.

However, the above systems use dedicated communication links that are very expensive when compared to modern networking technology. Furthermore, the data management model is limited to the primary-node sending messages to the secondary node scenario. This model does not support arbitrary read and write requests in a distributed data storage system.

There is a growing demand for distributed data storage systems. In response to this demand some prior art systems have evolved into complex assemblies of two systems, one proprietary data storage systems and another open networking server. One such system is described in a white paper on a company web site on Internet. The industry white paper, EMC Data Manager: A high-performance, centralized open system backup/restore solution for LAN-based and Symmetrix resident data. The paper describes two different systems, one for network attached hosts and second for channel attached hosts. The two systems are needed because of the lack of generic networking support. In related products such as Celerra File Server, product data sheets suggest using data movers for copying data between LAN-based open system storage and channel attached storage system.

Google Exhibit 1002
Google v. LS Cloud Storage Technologies
IPR2023-00777, Page 236 of 280

However, the above systems are built out two systems, one for handling I/O channels, another for handling open networks. Two systems are very expensive even in minimal configuration that must include two systems.

The preferred embodiment of the present invention overcomes the limitations of prior art systems by using standard off-the-shelf components and providing distributed cache that supports arbitrary reads and writes arriving via I/O channels or network links.

In another branch of storage industry, network attached storage systems use network links to attach to host computers. Various methods for managing cache memory and distributed applications for network attached hosts have been described in prior art. U.S. Pat. 5,819,292, Hitz, et. al., Method for maintaining consistent states of a file system and for creating user-accessible read-only copies of a file system, Oct 6, 1998, U.S. Pat. No, 5,644,751, Burnett, et. al., July 1, 1997, Distributed file system (DFS) cache management system based on file access characteristics, disclosures methods for implementing distributed file systems. U.S. Pat. No, 5,649,105, Aldred, et. al., July 15, 1997, Collaborative working in a network, disclosures programming methods for distributed applications using file sharing. U.S. Pat. No, 5,701,516, Chen, et. al., Dec 23. 1997, High-performance non-volatile RAM protected write cache accelerator system employing DMA and data transferring scheme, disclosures optimization methods for network attached hosts. However, those systems support only network file systems. Those systems do not support I/O channels.

In another application of storage systems, U.S. Pat. No, 5,790,795, Hough, August 4, 1998, Media server system which employs a SCSI bus and which utilizes SCSI logical units to differentiate between transfer modes, disclosures a media server that supports different file systems on different SCSI channels. However the system above is limited to a video data and does not support network attached hosts. Furthermore, in storage industry papers, Data Sharing, by Neema, Storage Management Solutions, Vol. 3, No. 3, May, 1998, and another industry paper, Storage management in UNIX environments: challenges and solutions, by Jerry Hoetger, Storage Management Solutions, Vol. 3, No. 4, survey a number of approaches in commercial storage systems and data sharing. However, existing storage systems are limited when applied to support multiple platform systems.

Therefore, a need exists to provide a high-performance data storage system that is assembled out of standard modules, using off-the-shelf hardware components and a standard general-purpose operating system that supports standard network software and protocols. In addition, the needs exists to provide a cached data storage system that permits independent data accesses from I/O channel attached local hosts, network attached remote hosts, and network attached remote data storage systems.

The preferred embodiment of the present invention disclosures a method for building a data storage system that provides superior functionality at lower cost when compared to prior art systems. The superior functionality is achieved by a method that

Google Exhibit 1002
Google v. LS Cloud Storage Technologies
IPR2023-00777, Page 237 of 280

uses underlying general-purpose operating system to provide utilities for managing storage devices, backing data, troubleshooting storage devices and performance monitoring. The lower cost is achieved by relying on standard components. Furthermore, the preferred embodiment of the present invention overcomes the limitations of prior art systems by providing concurrent access for both I/O channel attached hosts and network link attached hosts.

The preferred embodiment of this invention uses SCSI channels to connect to local hosts and uses standard network links card such as Ethernet, or ATM to connect to remote hosts. The alternate embodiment of the present invention uses fiber channel link such as Fibre Channel as defined by the Fibre Channel Association, FCA, 2570 West El Camino Real, Ste. 304, Mountain View, CA 94040-1313 or SSA as defined SSA Industry Association, DEPT H65/B-013 5600 Cottle Road, San Jose, CA 95193. Prior art systems such as U.S. Pat. No, 5,841,997, Bleiwess, et. al., November 24, 1998, Apparatus for effecting port switching of fibre channel loops, and U.S. Pat. No, 5,828,475, Bennett, et. al., October 27, 1998, Bypass switching and messaging mechanism for providing intermix fiber optic switch using a bypass bus and buffer, disclosure methods that connects disks and controllers. However, the problems remain in software, solution of which require methods described in the preferred embodiment of the present invention.

Summary of the Invention

The primary object of the invention is to provide a high performance, scalable, data storage system using off-the-shelf standard components. The preferred embodiment of the present invention comprises a network of PCs including an I/O channel adapter and network adapter and method for managing distributed cache memory stored in the plurality of PCs interconnected by the network. The use of standard PCs reduces the cost of the data storage system. The use of the network of PCs permits building large, high-performance, data storage systems.

Another object of the invention is to provide a method for sharing data between two or more heterogeneous host computers using different data formats and connected to a data storage system. The method includes a translation module that inputs a record in a format compatible with the first host and stores the translated record in a data format compatible with the second host. Sharing of data in one format and having a translation module permitting representations in different formats in cache memory provides a means for improving performance of I/O requests and saving disk storage space.

In accordance with the preferred embodiment of the invention, a data storage system comprising a network of PCs each of which includes a cache memory, I/O channel adapter for transmitting data over the channel and network adapter for transmitting data and control signals over the network. In one embodiment, a method for managing resources in a cache memory ensures consistency of data stored in the distributed cache. In another embodiment, a method for sharing data between two or more heterogeneous

Google Exhibit 1002
Google v. LS Cloud Storage Technologies
IPR2023-00777, Page 238 of 280

hosts including the steps of: reading a record in a format compatible with one computer; identifying a translation module associated with the second computer; translating the record into the format compatible with the second computer and writing said translated record into a cache memory.

The drawings constitute a part of this specification and include exemplary embodiments to the invention, which may be embodied in various forms.

Brief Description of the Drawings

FIG. 1 shows data storage systems configurations;
FIG. 2 illustrates in block diagram form the alternate embodiment of the data storage system of the present invention;
FIG. 2A illustrates in block diagram form the alternate embodiment of the data storage system of the present invention;
FIG. 2B illustrates in block diagram form another variation of the alternate embodiment of the present invention;
FIG. 3 shows a PC data storage system;
FIG. 4 illustrates in data flow diagram form the operations of a data storage system including: FIG. 4A illustrating operations in write exclusive mode, FIG 4B in read exclusive mode, FIG 4C in write shared mode, FIG 4D in read shared mode, FIG 4E in disk interrupt, FIG 4F in page flusher.
FIG. 5 illustrates in block diagram form data sharing operations.

Detailed Description of the Preferred Embodiments

Detailed descriptions of the preferred embodiment are provided herein. It is to be understood, however, that the present invention may be embodied in various forms. Therefore, specific details disclosed herein are not to be interpreted as limiting.

In accordance with the preferred embodiment of the present invention, FIG. 1 illustrates data storage system configurations of the preferred embodiment. The PC data storage system 131 services a plurality of channel attached host processors 111, 112 using channels 121, 122, and a plurality of network attached host processors 106, 107 using network link 151, and a plurality of network attached data storage systems 132, 133 using network links 152, 153. PC storage system 132 services channel attached hosts 157, 158.

Hosts 157 and 158 access a data storage system 131 indirectly via network attached data storage system 132, hereby offloading communications protocol overhead from remote hosts 157, 158. Hosts 106 and 107 directly access storage system 131 via network link 151 hereby incurring

Google Exhibit 1002
Google v. LS Cloud Storage Technologies
IPR2023-00777, Page 239 of 280

communications protocol overhead on hosts 106, 107 therefore decreasing performance of applications running on said hosts.

Host 111 accesses remote disk 181 via local data storage system 131, network link 153, and remote data storage system 133 without incurring protocol overhead on host 111. Host 157 accesses disk 161 via data storage system 133, network link 152, and data storage system 131 without incurring protocol overhead on host 157. Host 106 directly accesses local disk 161 via network link 151 hereby incurring protocol overhead. The disks 191, 192 that are attached to hosts 106, 107 without a data storage system, cannot be accessed by outside hosts.

The preferred embodiment of the present inventions uses well-established technologies such SCSI channels for I/O traffic and Ethernet link for network traffic. In FIG 2, the alternate embodiment of the present invention uses fiber channel technology for both I/O traffic and network traffic. The fiber channel connects computers and hard disks into one logical network. In one variation of the alternate embodiment in FIG.2, the fiber optics link is organized as a Fiber Channel Arbitrated Loop (FCAL). In another variation of the alternate embodiment in FIG. 2A, the fiber optics link is organized as a switching network. In yet another variation in FIG. 2B, the fiber channel is organized in two FCAL loops connected via switch.

FIG. 3 shows software architecture and modules of a PC data storage system that has been shown as a data storage system 131 in FIG 1. Data is received from the hosts 111, 112 via I/O channels 121, 122 in front-end software module 310 in FIG. 3. The front-end handles channel commands and places the results in cache memory 322 in the form of new data or modification to data already stored on the disk 161. The cache manager software module calls routines in the configuration manager 340 to ensure consistency of the cache memory in other network attached data storage systems. At some later point in time, the back-end software module 322 invokes a page flusher module to write modified data to disks 161 and 161 and free up cache memory.

The presence of fast access cache memory permits front end channels and network links to operate completely independent of the back-end physical disk devices. Because of this front-end/back-end separation, the data storage system 131 is liberated from the I/O channel and network timing dependencies. The data storage system is free to dedicate its processing resources to increase performance through more intelligent scheduling and data transfer network protocol.

FIG. 4 shows a flowchart of a data storage system in the process of reading or writing to data volumes stored on disk drives shown in FIG. 3. The flowchart uses a volume access table of FIG. 5 is controlled by the configuration manager. Local operations begin in step 401 where the corresponding front-end

Google Exhibit 1002
Google v. LS Cloud Storage Technologies
IPR2023-00777, Page 240 of 280

module 310 of FIG. 3 allocates a channel and waits for I/O requests from the initiating hosts 111 or 112. Remote operations begin in step 402. Depending upon the status of the value in a volume access table 450 the requests are routed though either 4A for write exclusive mode, 4B for read exclusive, 4C for write shared and 4D for read shared. Concurrently with the processing of I/O operations, independent page flusher daemon 4F scans cache memory and writes buffers to disks. Disk interrupt processing is shown in FIG 4E.

FIG. 4A shows a flowchart of the cache manager 320 of FIG. 3 as it processes a write request in an exclusive mode. In step 411 of FIG. 4A, the cache manager checks whether the requested buffer is in cache or not. For a cache miss, in step 412, the cache manager allocates a new buffer for storing data that will be written. For a cache hit, the cache manager branches directly to step 413 where data is copied into the newly allocated buffer. In step 414, the cache manager calls configuration manager routine that sends an invalidate request to the list of shared hosts for this particular volume. In step 415, the cache manager checks the type of a request. For a channel type of a request, the cache manager returns to step 405 to release the channel. For a network type of a request, the cache manager proceeds to release network request in step 419 on the right side of FIG. 4A.

On the right side of FIG. 4A, in step 416, network interrupt identifies and receives a remote write request. In step 417, the cache manager calls configuration manager routine to determine the validity of the request. Bad requests are ignored in step 418. Correct requests proceed to step for 410 for write exclusive processing. Step 415 returns the flow to step 419 that releases network resources.

FIG. 4B shows a flowchart of the cache manager as it processes a read request in an exclusive mode. In step 420, the cache manager checks whether the requested buffer is in cache or not. For a cache miss, in step 421, the cache manager allocates a buffer for storing data that will be read into. In step 422, the cache manager updates the buffer status with read pending. In step 423, the cache manager starts an operation to read from a hard disk driver and proceeds to release the channel in step 405. For a cache hit, in step 424, the cache manager transmits read data and proceeds to release the channel in step 405. For an identified network request, in step 425, the cache manager sends back read results in step 429.

On the right side of FIG. 4B, in step 426, network interrupt identifies and receives a remote read request. In step 427, the cache manager calls configuration manager routine that checks the configuration file and ignores bad requests in step 428. Correct requests proceed to step 420 for read exclusive processing. Step 425 returns the flow to step 429 that sends read results.

Google Exhibit 1002
Google v. LS Cloud Storage Technologies
IPR2023-00777, Page 241 of 280

FIG. 4C shows a flowchart of the cache manager as it processes a write request in a shared mode. In step 430, the cache manager checks whether the requested buffer is in cache or not. For a cache miss, in step 431, the cache manager allocates a new buffer for storing data that will be written. For a cache hit, the cache manager branches directly to step 432 where data is copied into the newly allocated buffer. In step 433, the cache manager updates the buffer status with write pending and proceeds to step 434 to release the channel. In step 435, the cache manager calls configuration manager routine that sends a remote write request to the host that holds this particular volume in an exclusive mode. In follow up to step 435, the cache manager returns to the beginning of FIG. 4.

On the right side of FIG. 4C, the cache manager updates the buffer status with write done in step 444. The flow begins with the network interrupt that calls configuration manager to validate the request in step 441. Bad requests are ignored in step 442. A correct request proceeds to step 443 that checks whether the status of this particular buffer is write pending. If the status is pending, in step 444, the cache manager updates the buffer status to write done. For any other buffer status, in step 445, the cache manager updates the status to free. This buffer is released in accordance with the invalidate request that has come from a remote host that holds this volume in an exclusive mode as has been described in FIG. 4A.

FIG. 4D shows a flowchart of the cache manager as it processes a read request in a shared mode. In step 450, the cache manager checks whether the requested buffer is in cache or not. For a cache miss, in step 452, the cache manager allocates a buffer for storing data that will be read into. For a cache hit, in step 451, the cache manager transmits read data and proceeds to step 405 to release the channel. In the case of the cache miss, the cache manager allocates a new buffer in step 452 and updates its status to read pending in step 453. In step 454, the cache manager closes the channel with an optimizer that maintains a pool of open channels which are kept open only for the specified amount of time. In step 455, the cache manager calls configuration manager routine that sends a remote read request to the host that holds this particular volume in an exclusive mode. The operations of the host holding volume in read exclusive mode have been shown in FIG. 4B.

On the right side of FIG. 4D, in step 456, network interrupt identifies a remote read result. In step 457, the cache manager performs an optimized channel open. Depending upon the status of the optimizer that has been initiated in step 454, the cache manager may immediately get access to the still open channel or, if the optimizer fails, the cache manager may need to reopen the channel. In step 458, the cache manager transmits read data. In step 459, the cache manager updates the buffer status to read done and proceeds to step 459 where it releases the channel.

Google Exhibit 1002
Google v. LS Cloud Storage Technologies
IPR2023-00777, Page 242 of 280

FIG. 4E shows a flowchart of the cache manager as it processes a hard disk interrupt request marking the completion of a read or write request. The read request has been started in step 423 in FIG 4B. The write request has been started in step 475 in FIG 4F. In step 460, the cache manager checks the type of the hardware interrupt. For a write interrupt in step 461, the cache manager updates the buffer status to write done and releases resources associated with the interrupt. For a read interrupt in step 462, the cache manager updates the buffer status to read done. In step 463, the cache manager checks request type of the read operation that has been started in FIG 4B. For a channel request, the cache manager proceeds to open a channel in step 466. In step 467, the cache manager transmits read data and proceeds to release the channel in step 405. For a network request in step 464, the cache manager finds the remote read requests that initiated the request. In step 466, the cache manager sends read results and ends interrupt processing.

FIG. 4F shows a flowchart of a cache memory page flusher. The flusher is a separate daemon running as part of the cache manager. In step 471, the flusher waits for the specified amount of time. After the delay in step 472, the flusher begins to scan pages in cached memory. In step 473, the flusher checks the page status. If the page list has been exhausted in branch no more pages, the flusher returns to step 471 where it waits. If the page status is other than the write pending, the flusher returns to step 472 to continue scanning for more pages. If the page status is write pending, the flusher proceeds to step 474. In step 474, the flusher checks the request type. For a channel type, the flusher starts a read operation in step 475 and returns to scan pages in step 472. For a network type, the flusher checks for the network operations in progress and returns to step 472 for more pages.

FIG. 5 shows data sharing operation between a plurality of heterogeneous host computers. In one embodiment of the implementation the plurality of hosts includes but is not limited to a Sun Solaris workstation 111, Windows NT server 112, HP UNIX 106, and Digital UNIX 107 each accessing a distinct virtual device respectively 510, 520, 530 and 540. Configuration manager 560 provides concurrency control for accessing virtual devices that are mapped to the same physical device 161. The configuration manager uses a volume access table 450 that has been shown in FIG. 4.

A virtual device is a method that comprises three operations: initialization, read and write. The initialization operation registers a virtual device in an operating system on a heterogeneous host. Following the registration, the virtual device appears as if it is another physical device that can be brought on-line, offline or mounted a file system. An application program running on the host cannot distinguish between a virtual device and a physical device.

Google Exhibit 1002
Google v. LS Cloud Storage Technologies
IPR2023-00777, Page 243 of 280

For a virtual device, the read operation begins with a read from a physical device followed by a call to a translation module. The translation module inputs a shared record in a original format used on a physical disk and outputs the record in a new format that is specified for and is compatible with a host computer. The write operation begins with a call to a translation module that inputs a record in a new format and outputs a record in a shared format. The translation module is a dynamically loadable library that can be changed, compiled and linked at run-time.

The virtual device method described above allows a plurality of heterogeneous host computers to share one copy of data stored on a physical disk. In a data storage system using said virtual device method, a plurality of virtual devices is maintained in cache without requiring a copy of data on a physical disk.

While the invention has been described in connection with a preferred embodiment, it is not intended to limit the scope of the invention to the particular form set forth.

Google Exhibit 1002
Google v. LS Cloud Storage Technologies
IPR2023-00777, Page 244 of 280

CLAIMS

What is claimed is:

Sub C1

1. A data storage system comprising:
a network interconnecting a plurality of PCs each of which includes:

an I/O channel adapter for transmitting data over the channel and a network adapter for transmitting control signals and data over the network;

front-end software for handling I/O requests arriving to the I/O channel adapter and the network adapter;

cache manager software for handling data stored in cash memory of the PC, said cache memory comprises a portion of a distributed cache memory stored in the plurality of PCs interconnected by the network;

back-end software for handling reads and writes to disks; and

a configuration manager software module for managing resources in the cache manager to ensure consistency of data stored in the distributed cache.

2. The system of claim 1, wherein the configuration manager includes software that checks:

if an access mode is set to exclusive mode, and if so data storage subsystems caches both reads and writes and the data storage system sends invalidate messages to remote storage systems; and

if the access mode is set to shared, the storage system caches only reads; and

if the access mode is set to no-access, the configuration manager rejects all requests directed to the data storage system.

3 The system of claim 1 wherein the configuration manager comprises software for synchronizing configuration files on remote storage systems comprising the following modulars:

software for receiving a request for an update of a configuration file;

software for suspending execution of configuration managers on remote nodes;

17

Google Exhibit 1002
Google v. LS Cloud Storage Technologies
IPR2023-00777, Page 245 of 280

Sub C1 Cont'd

software for updating configuration files on remote nodes;

software for resuming execution of remote configuration managers.

4. The system of claim 1, wherein PCs are using off-the-shelf hardware components.

Sub D2

5. A method for concurrent data sharing between a plurality of heterogeneous host computers each using a virtual device that permits mapping between a plurality of heterogeneous host computers and one physical device.

6. A method as claimed in claim 5 wherein the operations of the virtual device comprises:

initialization operation that registers a virtual device in an operating system of a heterogeneous host; and

write operation comprising the steps of translating a record into a shared record format and writing shared record to a physical device; and

read operation comprising the steps of reading a shared record and translating the record into a new format compatible with a host computer.

7. A method for sharing data between two or more heterogeneous host computers employing different data storage formats and connected to a data storage system, comprising:

reading a record in a format compatible with a first computer into a cache memory of a data storage system,

identifying a translation module defined in a configuration file for the second computer; and

translating said record into a format compatible with the second computer and;

writing said translated record into the cache memory.

[add a 2>]

Abstract of the Disclosure

A data storage system comprising a network of PCs each of which includes a cache memory, I/O channel adapter for transmitting data over the channel and a

Google Exhibit 1002
Google v. LS Cloud Storage Technologies
IPR2023-00777, Page 246 of 280

network adapter for transmitting control signals and data over the network. In one embodiment, a method for managing resources in a cache manager ensures consistency of data stored in the distributed cache. In another embodiment, a method for sharing data between two or more heterogeneous hosts including the steps of: reading a record in a format compatible with one computer; identifying a translation module with the second computer; translating the record into a format compatible with the second computer and writing said translated record into a cache memory.

Google Exhibit 1002
Google v. LS Cloud Storage Technologies
IPR2023-00777, Page 247 of 280

Abstract of the Disclosure

A data storage system comprising a network of PCs each of which includes a cache memory, I/O channel adapter for transmitting data over the channel and a network adapter for transmitting control signals and data over the network. In one embodiment, a method for managing resources in a cache manager ensures consistency of data stored in the distributed cache. In another embodiment, a method for sharing data between two or more heterogeneous hosts including the steps of: reading a record in a format compatible with one computer; identifying a translation module with the second computer; translating the record into a format compatible with the second computer and writing said translated record into a cache memory.

Google Exhibit 1002
Google v. LS Cloud Storage Technologies
IPR2023-00777, Page 248 of 280

Best Available Copy

Please type a plus sign (+) inside this box ☐

PTO/SB/01 (8-96)
Approved for use through 9/30/98. OMB 0651-0032
Patent and Trade[illegible] Office: U.S. DEPARTMENT OF COMMERCE

Under the Paperwork Reduction Act of 199[illegible] persons are required to respond to a collection of informat[illegible] ss it contains a valid OMB control number.

DECLARATION FOR UTILITY OR DESIGN PATENT APPLICATION

☑ Declaration Submitted with Initial Filing OR ☐ Declaration Submitted after Initial Filing

Attorney Docket Number	
First Named Inventor	ILYA GERTNER
COMPLETE IF KNOWN	
Application Number	
Filing Date	
Group Art Unit	
Examiner Name	

As a below named inventor, I hereby declare that:

My residence, post office address, and citizenship are as stated below next to my name.

I believe I am the original, first and sole inventor (if only one name is listed below) or an original, first and joint inventor (if plural names are listed below) of the subject matter which is claimed and for which a patent is sought on the invention entitled :

NETWORK OF DATA STORAGE SUBSYSTEMS AND METHOD FOR USING SAME

(Title of the Invention)

the specification of which

☑ is attached hereto

OR

☐ was filed on (MM/DD/YYYY) _____ as United States Application Number or PCT International

Application Number _____ and was amended on (MM/DD/YYYY) _____ (if applicable).

I hereby state that I have reviewed and understand the contents of the above identified specification, including the claims, as amended by any amendment specifically referred to above.

I acknowledge the duty to disclose information which is material to patentability as defined in Title 37 Code of Federal Regulations, § 1.56.

I hereby claim foreign priority benefits under Title 35, United States Code §119 (a)-(d) or § 365(b) of any foreign application(s) for patent or inventor's certificate, or §365 (a) of any PCT international application which designated at least one country other than the United States of America, listed below and have also identified below, by checking the box, any foreign application for patent or inventor's certificate, or of any PCT international application having a filing date before that of the application on which priority is claimed.

Prior Foreign Application Number(s)	Country	Foreign Filing Date (MM/DD/YYYY)	Priority Not Claimed	Certified Copy Attached? YES	NO
			☐	☐	☐
			☐	☐	☐
			☐	☐	☐
			☐	☐	☐
			☐	☐	☐
			☐	☐	☐

☐ Additional foreign application numbers are listed on a supplemental priority sheet attached hereto:

I hereby claim the benefit under Title 35, United States Code § 119(e) of any United States provisional application(s) listed below.

Application Number(s)	Filing Date (MM/DD/YYYY)	
		☐ Additional provisional application numbers are listed on a supplemental priority sheet attached hereto.

Burden Hour Statement: This form is estimated to take 0.4 hours to complete. Time will vary depending upon the needs of the individual case. Any comments on the amount of time you are required to complete this form should be sent to the Chief Information Officer, Patent and Trademark Office, Washington, DC 20231. DO NOT SEND FEES OR COMPLETED FORMS TO THIS ADDRESS. SEND TO: Commissioner of Patents and Trademarks, Washington, DC 20231.

Google Exhibit 1002
Google v. LS Cloud Storage Technologies
IPR2023-00777, Page 249 of 280

Best Available Copy

Please type a plus sign (+) inside this box → ☐

PTO/SB/01 (8-96)
Approved for use through 9/30/98. OMB 0651-0032
Patent and Trademark Office: U.S. DEPARTMENT OF COMMERCE

Under the Paperwork Reduction Act of 1995, no persons are required to respond to a collection of information unless it contains a valid OMB control number.

DECLARATION

I hereby claim the benefit under Title 35, United States Code §120 of any United States application(s), or §365(c) of any PCT international application designating the United States of America, listed below and, insofar as the subject matter of each of the claims of this application is not disclosed in the prior United States or PCT International application in the manner provided by the first paragraph of Title 35, United States Code §112, I acknowledge the duty to disclose information which is material to patentability as defined in Title 37, Code of Federal Regulations §1.56 which became available between the filing date of the prior application and the national or PCT International filing date of this application.

U.S. Parent Application Number	PCT Parent Number	Parent Filing Date (MM/DD/YYYY)	Parent Patent Number *(if applicable)*

☐ Additional U.S. or PCT international application numbers are listed on a supplemental priority sheet attached hereto.

As a named inventor, I hereby appoint the following registered practitioner(s) to prosecute this application and to transact all business in the Patent and Trademark Office connected therewith:

Name	Registration Number	Name	Registration Number

☐ Additional registered practitioner(s) named on a supplemental sheet attached hereto.

Direct all correspondence to:

Name	ILYA GERTNER				
Address	NETWORK DISK, INC.				
Address	5 GASLIGHT LANE				
City	FRAMINGHAM	State	MA	ZIP	01701
Country	U.S.A.	Telephone	(508) 872-9586	Fax	(508) 872-2414

I hereby declare that all statements made herein of my own knowledge are true and that all statements made on information and belief are believed to be true; and further that these statements were made with the knowledge that willful false statements and the like so made are punishable by fine or imprisonment, or both, under Section 1001 of Title 18 of the United States Code and that such willful false statements may jeopardize the validity of the application or any patent issued thereon.

Name of Sole or First Inventor: ☐ A petition has been filed for this unsigned inventor

Given Name	ILYA	Middle Initial		Family Name	GERTNER	Suffix e.g. Jr.	
Inventor's Signature	Ilya Gertner					Date	1/8/98
Residence: City	FRAMINGHAM	State	MA	Country	USA	Citizenship	US
Post Office Address	5 GASLIGHT LANE						
Post Office Address							
City	FRAMINGHAM	State	MA	Zip	01701	Country	USA

☐ Additional inventors are being named on supplemental sheet(s) attached hereto

Google Exhibit 1002
Google v. LS Cloud Storage Technologies
IPR2023-00777, Page 250 of 280

PTO/SB/10 (10-96)
Approved for use through 10/31/99. OMB 0651-0031
Patent and Trademark Office; U.S. DEPARTMENT OF COMMERCE
Under the Paperwork Reduction Act of 1995, no persons are required to respond to a collection of information unless it displays a valid OMB control number.

VERIFIED STATEMENT CLAIMING SMALL ENTITY STATUS (37 CFR 1.9(f) & 1.27(c))–SMALL BUSINESS CONCERN

Docket Number (Optional)

Applicant or Patentee: ILYA GERTNER
Application or Patent No.:
Filed or Issued: 1/15/99
Title: A DATA STORAGE SYSTEM COMPRISING A NETWORK OF PCS AND METHOD USING SAME

I hereby declare that I am
- [x] the owner of the small business concern identified below:
- [ ] an official of the small business concern empowered to act on behalf of the concern identified below:

NAME OF SMALL BUSINESS CONCERN NETWORK DISK, INC.

ADDRESS OF SMALL BUSINESS CONCERN 5 GASLIGHT LANE FRAMINGHAM, MA 01701

I hereby declare that the above identified small business concern qualifies as a small business concern as defined in 13 CFR 121.12, and reproduced in 37 CFR 1.9(d), for purposes of paying reduced fees to the United States Patent and Trademark Office, in that the number of employees of the concern, including those of its affiliates, does not exceed 500 persons. For purposes of this statement, (1) the number of employees of the business concern is the average over the previous fiscal year of the concern of the persons employed on a full-time, part-time, or temporary basis during each of the pay periods of the fiscal year, and (2) concerns are affiliates of each other when either, directly or indirectly, one concern controls or has the power to control the other, or a third party or parties controls or has the power to control both.

I hereby declare that rights under contract or law have been conveyed to and remain with the small business concern identified above with regard to the invention described in:

- [x] the specification filed herewith with title as listed above.
- [x] the application identified above.
- [ ] the patent identified above.

If the rights held by the above identified small business concern are not exclusive, each individual, concern, or organization having rights in the invention must file separate verified statements averring to their status as small entities, and no rights to the invention are held by any person, other than the inventor, who would not qualify as an independent inventor under 37 CFR 1.9(c) if that person made the invention, or by any concern which would not qualify as a small business concern under 37 CFR 1.9(d), or a nonprofit organization under 37 CFR 1.9(e).

Each person, concern, or organization having any rights in the invention is listed below:
- [x] no such person, concern, or organization exists.
- [ ] each such person, concern, or organization is listed below.

Separate verified statements are required from each named person, concern or organization having rights to the invention averring to their status as small entities. (37 CFR 1.27)

I acknowledge the duty to file, in this application or patent, notification of any change in status resulting in loss of entitlement to small entity status prior to paying, or at the time of paying, the earliest of the issue fee or any maintenance fee due after the date on which status as a small entity is no longer appropriate. (37 CFR 1.28(b))

I hereby declare that all statements made herein of my own knowledge are true and that all statements made on information and belief are believed to be true; and further that these statements were made with the knowledge that willful false statements and the like so made are punishable by fine or imprisonment, or both, under section 1001 of Title 18 of the United States Code, and that such willful false statements may jeopardize the validity of the application, any patent issuing thereon, or any patent to which this verified statement is directed.

NAME OF PERSON SIGNING ILYA GERTNER

TITLE OF PERSON IF OTHER THAN OWNER PRESIDENT

ADDRESS OF PERSON SIGNING 5 GASLIGHT LN, FRAM, MA 01701

SIGNATURE Ilya Gertner DATE 1/15/99

As subscribed and sworn to before me on: Jan. 15, 1999
(Notary Public)
My commission expires: Jan. 31, 2003

Burden Hour Statement: This form is estimated to take 0.3 hours to complete. Time will vary depending upon the needs of the individual case. Any comments on the amount of time you are required to complete this form should be sent to the Chief Information Officer, Patent and Trademark Office, Washington, DC 20231. DO NOT SEND FEES OR COMPLETED FORMS TO THIS ADDRESS. SEND TO: Assistant Commissioner for Patents, Washington, DC 20231.

A Data Storage System Comprising a Network of PCs and Method Using Same

Background of the Invention

1.The Field of the Invention

This invention relates generally to the field of cached data storage systems and more particularly to a data storage system that permits independent access from local hosts connected via I/O channels and independent access from remote hosts and remote storage systems connected via network links. A network of PCs permits building a high-performance, scalable, data storage system using off-the-shelf components at reduced cost. A configuration manager ensures consistency of data stored in the distributed cache.

2. Description of Related Art

A typical data processing system generally involves a cached data storage system that connects to local host computers via I/O channels or remote host computers via network links. The purpose of the data storage system is to improve the performance of applications running on the host computer by offloading I/O processing from the host to the data storage system. The purpose of the cache memory in a data storage system is to further improve the performance of the applications by temporarily storing data buffers in the cache so that the references to those buffers can be resolved efficiently as "cache hits". Reading data from a cache is an order of magnitude faster than reading data from a back end storage device such as a disk. Writing data to a cache is also an order of magnitude faster than writing to a disk. All writes are cache hits because data is simply copied into cache buffers that are later flushed to disks.

Prior art data storage systems are implemented using proprietary hardware and very low-level, frequently referred to as microcode, software resulting in expensive and not portable systems. In contrast to the prior art systems, the preferred embodiment of the present invention uses standard hardware and software components. A network of commercial PCs is used to implement a high-performance data storage system. A method using the network of PCs includes an algorithm for a configuration manager that manages access to the distributed cache memory stored in PCs interconnected by the network.

Numerous prior art systems and methods exist for managing cache memory in a data storage system. The prior art has suggested several methods for managing cache for channel attached hosts. U.S.Pat. No, 5,717,884, Gzym, et. al., Feb 2, 1996, Method and Apparatus for Cache Management, disclosures data structures and algorithms that use a plurality of slots, each of which is used to store data files. U.S. Pat. No, 5,757,473, Vishlitzky, et. al., Cache Management system using time stamping for replacement queue, Jul 28, 1998, disclosures a method that uses time stamps to manage queues in a cached data storage system. U.S.Pat. No, 5,751,993, Ofek, et. al., May 12, 1998, Cache Management Systems, disclosures yet another aspect in queue management algorithms.

Google Exhibit 1002
Google v. LS Cloud Storage Technologies
IPR2023-00777, Page 252 of 280

U.S. Pat. No, 5,600,817, Macon Jr., et. al., Feb. 4, 1997, Asynchronous read-ahead disk caching using multiple disk I/O processes and dynamically variable prefetch length, disclosures read-ahead methods in cached storage systems. U.S. Pat. No, 5,758,050, Brady, et. al., May 26, 1998, Reconfigurable data storage system, disclosures a method for reconfiguring a data storage system.

However, the above systems use very specialized embedded operating systems and custom programming in a very low-level programming language such as assembler. The obvious drawback of the above systems is high cost because assembler-level programming is very time consuming. Another drawback is inflexibility and lack of functionality. For example, some features such as reconfigurability in data storage are very limited in proprietary embedded systems when compared to general purpose operating systems. Finally, networking support is very expensive and limited because it relies on dedicated communication links such as T1, T3 and ESCON.

One prior art system using networking of data storage systems is disclosed in U.S. Pat. No, 5,742,792, Yanai, et. al., April 21, 1998, Remote Data Mirroring. This patent disclosures a primary data storage system providing storage services to a primary host and a secondary data storage system providing services to a secondary host. The primary storage system sends all writes to the secondary storage system via IBM ESCON, or optionally via T1 or T3 communications link. The secondary data storage system provides a backup copy of the primary storage system. Another prior art system is disclosed in. U.S. Pat. No, 5,852,715, Raz , et al., December 22, 1998, System for currently updating database by one host and reading the database by different host for the purpose of implementing decision support functions.

However, the above systems use dedicated communication links that are very expensive when compared to modern networking technology. Furthermore, the data management model is limited to the primary-node sending messages to the secondary node scenario. This model does not support arbitrary read and write requests in a distributed data storage system.

There is a growing demand for distributed data storage systems. In response to this demand some prior art systems have evolved into complex assemblies of two systems, one proprietary data storage systems and another open networking server. One such system is described in a white paper on a company web site on Internet. The industry white paper, EMC Data Manager: A high-performance, centralized open system backup/restore solution for LAN-based and Symmetrix resident data. The paper describes two different systems, one for network attached hosts and second for channel attached hosts. The two systems are needed because of the lack of generic networking support. In related products such as Celerra File Server, product data sheets suggest using data movers for copying data between LAN-based open system storage and channel attached storage system.

Google Exhibit 1002
Google v. LS Cloud Storage Technologies
IPR2023-00777, Page 253 of 280

However, the above systems are built out two systems, one for handling I/O channels, another for handling open networks. Two systems are very expensive even in minimal configuration that must include two systems.

The preferred embodiment of the present invention overcomes the limitations of prior art systems by using standard off-the-shelf components and providing distributed cache that supports arbitrary reads and writes arriving via I/O channels or network links.

In another branch of storage industry, network attached storage systems use network links to attach to host computers. Various methods for managing cache memory and distributed applications for network attached hosts have been described in prior art. U.S. Pat. 5,819,292, Hitz, et. al., Method for maintaining consistent states of a file system and for creating user-accessible read-only copies of a file system, Oct 6, 1998, U.S. Pat. No, 5,644,751, Burnett, et. al., July 1, 1997, Distributed file system (DFS) cache management system based on file access characteristics, disclosures methods for implementing distributed file systems. U.S. Pat. No, 5,649,105, Aldred, et. al., July 15, 1997, Collaborative working in a network, disclosures programming methods for distributed applications using file sharing. U.S. Pat. No, 5,701,516, Chen, et. al., Dec 23. 1997, High-performance non-volatile RAM protected write cache accelerator system employing DMA and data transferring scheme, disclosures optimization methods for network attached hosts. However, those systems support only network file systems. Those systems do not support I/O channels.

In another application of storage systems, U.S. Pat. No, 5,790,795, Hough, August 4, 1998, Media server system which employs a SCSI bus and which utilizes SCSI logical units to differentiate between transfer modes, disclosures a media server that supports different file systems on different SCSI channels. However the system above is limited to a video data and does not support network attached hosts. Furthermore, in storage industry papers, Data Sharing, by Neema, Storage Management Solutions, Vol. 3, No. 3, May, 1998, and another industry paper, Storage management in UNIX environments: challenges and solutions, by Jerry Hoetger, Storage Management Solutions, Vol. 3, No. 4, survey a number of approaches in commercial storage systems and data sharing. However, existing storage systems are limited when applied to support multiple platform systems.

Therefore, a need exists to provide a high-performance data storage system that is assembled out of standard modules, using off-the-shelf hardware components and a standard general-purpose operating system that supports standard network software and protocols. In addition, the needs exists to provide a cached data storage system that permits independent data accesses from I/O channel attached local hosts, network attached remote hosts, and network attached remote data storage systems.

The preferred embodiment of the present invention disclosures a method for building a data storage system that provides superior functionality at lower cost when compared to prior art systems. The superior functionality is achieved by a method that

Google Exhibit 1002
Google v. LS Cloud Storage Technologies
IPR2023-00777, Page 254 of 280

uses underlying general-purpose operating system to provide utilities for managing storage devices, backing data, troubleshooting storage devices and performance monitoring. The lower cost is achieved by relying on standard components. Furthermore, the preferred embodiment of the present invention overcomes the limitations of prior art systems by providing concurrent access for both I/O channel attached hosts and network link attached hosts.

The preferred embodiment of this invention uses SCSI channels to connect to local hosts and uses standard network links card such as Ethernet, or ATM to connect to remote hosts. The alternate embodiment of the present invention uses fiber channel link such as Fibre Channel as defined by the Fibre Channel Association, FCA, 2570 West El Camino Real, Ste. 304, Mountain View, CA 94040-1313 or SSA as defined SSA Industry Association, DEPT H65/B-013 5600 Cottle Road, San Jose, CA 95193. Prior art systems such as U.S. Pat. No, 5,841,997, Bleiwess, et. al., November 24, 1998, Apparatus for effecting port switching of fibre channel loops, and U.S. Pat. No, 5,828,475, Bennett, et. al., October 27, 1998, Bypass switching and messaging mechanism for providing intermix fiber optic switch using a bypass bus and buffer, disclosure methods that connects disks and controllers. However, the problems remain in software, solution of which require methods described in the preferred embodiment of the present invention.

Summary of the Invention

The primary object of the invention is to provide a high performance, scalable, data storage system using off-the-shelf standard components. The preferred embodiment of the present invention comprises a network of PCs including an I/O channel adapter and network adapter and method for managing distributed cache memory stored in the plurality of PCs interconnected by the network. The use of standard PCs reduces the cost of the data storage system. The use of the network of PCs permits building large, high-performance, data storage systems.

Another object of the invention is to provide a method for sharing data between two or more heterogeneous host computers using different data formats and connected to a data storage system. The method includes a translation module that inputs a record in a format compatible with the first host and stores the translated record in a data format compatible with the second host. Sharing of data in one format and having a translation module permitting representations in different formats in cache memory provides a means for improving performance of I/O requests and saving disk storage space.

In accordance with the preferred embodiment of the invention, a data storage system comprising a network of PCs each of which includes a cache memory, I/O channel adapter for transmitting data over the channel and network adapter for transmitting data and control signals over the network. In one embodiment, a method for managing resources in a cache memory ensures consistency of data stored in the distributed cache. In another embodiment, a method for sharing data between two or more heterogeneous

Google Exhibit 1002
Google v. LS Cloud Storage Technologies
IPR2023-00777, Page 255 of 280

hosts including the steps of: reading a record in a format compatible with one computer; identifying a translation module associated with the second computer; translating the record into the format compatible with the second computer and writing said translated record into a cache memory.

The drawings constitute a part of this specification and include exemplary embodiments to the invention, which may be embodied in various forms.

Brief Description of the Drawings

FIG. 1 shows data storage systems configurations;
FIG. 2 illustrates in block diagram form the alternate embodiment of the data storage system of the present invention;
FIG. 2A illustrates in block diagram form the alternate embodiment of the data storage system of the present invention;
FIG. 2B illustrates in block diagram form another variation of the alternate embodiment of the present invention;
FIG. 3 shows a PC data storage system;
FIG. 4 illustrates in data flow diagram form the operations of a data storage system including: FIG. 4A illustrating operations in write exclusive mode, FIG 4B in read exclusive mode, FIG 4C in write shared mode, FIG 4D in read shared mode, FIG 4E in disk interrupt, FIG 4F in page flusher.
FIG. 5 illustrates in block diagram form data sharing operations.

Detailed Description of the Preferred Embodiments

Detailed descriptions of the preferred embodiment are provided herein. It is to be understood, however, that the present invention may be embodied in various forms. Therefore, specific details disclosed herein are not to be interpreted as limiting.

In accordance with the preferred embodiment of the present invention, FIG. 1 illustrates data storage system configurations of the preferred embodiment. The PC data storage system 131 services a plurality of channel attached host processors 111, 112 using channels 121, 122, and a plurality of network attached host processors 106, 107 using network link 151, and a plurality of network attached data storage systems 132, 133 using network links 152, 153. PC storage system 132 services channel attached hosts 157, 158.

Hosts 157 and 158 access a data storage system 131 indirectly via network attached data storage system 132, hereby offloading communications protocol overhead from remote hosts 157, 158. Hosts 106 and 107 directly access storage system 131 via network link 151 hereby incurring

Google Exhibit 1002
Google v. LS Cloud Storage Technologies
IPR2023-00777, Page 256 of 280

communications protocol overhead on hosts 106, 107 therefore decreasing performance of applications running on said hosts.

Host 111 accesses remote disk 181 via local data storage system 131, network link 153, and remote data storage system 133 without incurring protocol overhead on host 111. Host 157 accesses disk 161 via data storage system 133, network link 152, and data storage system 131 without incurring protocol overhead on host 157. Host 106 directly accesses local disk 161 via network link 151 hereby incurring protocol overhead. The disks 191, 192 that are attached to hosts 106, 107 without a data storage system, cannot be accessed by outside hosts.

The preferred embodiment of the present inventions uses well-established technologies such SCSI channels for I/O traffic and Ethernet link for network traffic. In FIG 2, the alternate embodiment of the present invention uses fiber channel technology for both I/O traffic and network traffic. The fiber channel connects computers and hard disks into one logical network. In one variation of the alternate embodiment in FIG.2, the fiber optics link is organized as a Fiber Channel Arbitrated Loop (FCAL). In another variation of the alternate embodiment in FIG. 2A, the fiber optics link is organized as a switching network. In yet another variation in FIG. 2B, the fiber channel is organized in two FCAL loops connected via switch.

FIG. 3 shows software architecture and modules of a PC data storage system that has been shown as a data storage system 131 in FIG 1. Data is received from the hosts 111, 112 via I/O channels 121, 122 in front-end software module 310 in FIG. 3. The front-end handles channel commands and places the results in cache memory 322 in the form of new data or modification to data already stored on the disk 161. The cache manager software module calls routines in the configuration manager 340 to ensure consistency of the cache memory in other network attached data storage systems. At some later point in time, the back-end software module 322 invokes a page flusher module to write modified data to disks 161 and 161 and free up cache memory.

The presence of fast access cache memory permits front end channels and network links to operate completely independent of the back-end physical disk devices. Because of this front-end/back-end separation, the data storage system 131 is liberated from the I/O channel and network timing dependencies. The data storage system is free to dedicate its processing resources to increase performance through more intelligent scheduling and data transfer network protocol.

FIG. 4 shows a flowchart of a data storage system in the process of reading or writing to data volumes stored on disk drives shown in FIG. 3. The flowchart uses a volume access table of FIG. 5 is controlled by the configuration manager. Local operations begin in step 401 where the corresponding front-end

Google Exhibit 1002
Google v. LS Cloud Storage Technologies
IPR2023-00777, Page 257 of 280

module 310 of FIG. 3 allocates a channel and waits for I/O requests from the initiating hosts 111 or 112. Remote operations begin in step 402. Depending upon the status of the value in a volume access table 450 the requests are routed though either 4A for write exclusive mode, 4B for read exclusive, 4C for write shared and 4D for read shared. Concurrently with the processing of I/O operations, independent page flusher daemon 4F scans cache memory and writes buffers to disks. Disk interrupt processing is shown in FIG 4E.

FIG. 4A shows a flowchart of the cache manager 320 of FIG. 3 as it processes a write request in an exclusive mode. In step 411 of FIG. 4A, the cache manager checks whether the requested buffer is in cache or not. For a cache miss, in step 412, the cache manager allocates a new buffer for storing data that will be written. For a cache hit, the cache manager branches directly to step 413 where data is copied into the newly allocated buffer. In step 414, the cache manager calls configuration manager routine that sends an invalidate request to the list of shared hosts for this particular volume. In step 415, the cache manager checks the type of a request. For a channel type of a request, the cache manager returns to step 405 to release the channel. For a network type of a request, the cache manager proceeds to release network request in step 419 on the right side of FIG. 4A.

On the right side of FIG. 4A, in step 416, network interrupt identifies and receives a remote write request. In step 417, the cache manager calls configuration manager routine to determine the validity of the request. Bad requests are ignored in step 418. Correct requests proceed to step for 410 for write exclusive processing. Step 415 returns the flow to step 419 that releases network resources.

FIG. 4B shows a flowchart of the cache manager as it processes a read request in an exclusive mode. In step 420, the cache manager checks whether the requested buffer is in cache or not. For a cache miss, in step 421, the cache manager allocates a buffer for storing data that will be read into. In step 422, the cache manager updates the buffer status with read pending. In step 423, the cache manager starts an operation to read from a hard disk driver and proceeds to release the channel in step 405. For a cache hit, in step 424, the cache manager transmits read data and proceeds to release the channel in step 405. For an identified network request, in step 425, the cache manager sends back read results in step 429.

On the right side of FIG. 4B, in step 426, network interrupt identifies and receives a remote read request. In step 427, the cache manager calls configuration manager routine that checks the configuration file and ignores bad requests in step 428. Correct requests proceed to step 420 for read exclusive processing. Step 425 returns the flow to step 429 that sends read results.

Google Exhibit 1002
Google v. LS Cloud Storage Technologies
IPR2023-00777, Page 258 of 280

FIG. 4C shows a flowchart of the cache manager as it processes a write request in a shared mode. In step 430, the cache manager checks whether the requested buffer is in cache or not. For a cache miss, in step 431, the cache manager allocates a new buffer for storing data that will be written. For a cache hit, the cache manager branches directly to step 432 where data is copied into the newly allocated buffer. In step 433, the cache manager updates the buffer status with write pending and proceeds to step 434 to release the channel. In step 435, the cache manager calls configuration manager routine that sends a remote write request to the host that holds this particular volume in an exclusive mode. In follow up to step 435, the cache manager returns to the beginning of FIG. 4.

On the right side of FIG. 4C, the cache manager updates the buffer status with write done in step 444. The flow begins with the network interrupt that calls configuration manager to validate the request in step 441. Bad requests are ignored in step 442. A correct request proceeds to step 443 that checks whether the status of this particular buffer is write pending. If the status is pending, in step 444, the cache manager updates the buffer status to write done. For any other buffer status, in step 445, the cache manager updates the status to free. This buffer is released in accordance with the invalidate request that has come from a remote host that holds this volume in an exclusive mode as has been described in FIG. 4A.

FIG. 4D shows a flowchart of the cache manager as it processes a read request in a shared mode. In step 450, the cache manager checks whether the requested buffer is in cache or not. For a cache miss, in step 452, the cache manager allocates a buffer for storing data that will be read into. For a cache hit, in step 451, the cache manager transmits read data and proceeds to step 405 to release the channel. In the case of the cache miss, the cache manager allocates a new buffer in step 452 and updates its status to read pending in step 453. In step 454, the cache manager closes the channel with an optimizer that maintains a pool of open channels which are kept open only for the specified amount of time. In step 455, the cache manager calls configuration manager routine that sends a remote read request to the host that holds this particular volume in an exclusive mode. The operations of the host holding volume in read exclusive mode have been shown in FIG. 4B.

On the right side of FIG. 4D, in step 456, network interrupt identifies a remote read result. In step 457, the cache manager performs an optimized channel open. Depending upon the status of the optimizer that has been initiated in step 454, the cache manager may immediately get access to the still open channel or, if the optimizer fails, the cache manager may need to reopen the channel. In step 458, the cache manager transmits read data. In step 459, the cache manager updates the buffer status to read done and proceeds to step 459 where it releases the channel.

Google Exhibit 1002
Google v. LS Cloud Storage Technologies
IPR2023-00777, Page 259 of 280

FIG. 4E shows a flowchart of the cache manager as it processes a hard disk interrupt request marking the completion of a read or write request. The read request has been started in step 423 in FIG 4B. The write request has been started in step 475 in FIG 4F. In step 460, the cache manager checks the type of the hardware interrupt. For a write interrupt in step 461, the cache manager updates the buffer status to write done and releases resources associated with the interrupt. For a read interrupt in step 462, the cache manager updates the buffer status to read done. In step 463, the cache manager checks request type of the read operation that has been started in FIG 4B. For a channel request, the cache manager proceeds to open a channel in step 466. In step 467, the cache manager transmits read data and proceeds to release the channel in step 405. For a network request in step 464, the cache manager finds the remote read requests that initiated the request. In step 466, the cache manager sends read results and ends interrupt processing.

FIG. 4F shows a flowchart of a cache memory page flusher. The flusher is a separate daemon running as part of the cache manager. In step 471, the flusher waits for the specified amount of time. After the delay in step 472, the flusher begins to scan pages in cached memory. In step 473, the flusher checks the page status. If the page list has been exhausted in branch no more pages, the flusher returns to step 471 where it waits. If the page status is other than the write pending, the flusher returns to step 472 to continue scanning for more pages. If the page status is write pending, the flusher proceeds to step 474. In step 474, the flusher checks the request type. For a channel type, the flusher starts a read operation in step 475 and returns to scan pages in step 472. For a network type, the flusher checks for the network operations in progress and returns to step 472 for more pages.

FIG. 5 shows data sharing operation between a plurality of heterogeneous host computers. In one embodiment of the implementation the plurality of hosts includes but is not limited to a Sun Solaris workstation 111, Windows NT server 112, HP UNIX 106, and Digital UNIX 107 each accessing a distinct virtual device respectively 510, 520, 530 and 540. Configuration manager 560 provides concurrency control for accessing virtual devices that are mapped to the same physical device 161. The configuration manager uses a volume access table 450 that has been shown in FIG. 4.

A virtual device is a method that comprises three operations: initialization, read and write. The initialization operation registers a virtual device in an operating system on a heterogeneous host. Following the registration, the virtual device appears as if it is another physical device that can be brought on-line, offline or mounted a file system. An application program running on the host cannot distinguish between a virtual device and a physical device.

Google Exhibit 1002
Google v. LS Cloud Storage Technologies
IPR2023-00777, Page 260 of 280

For a virtual device, the read operation begins with a read from a physical device followed by a call to a translation module. The translation module inputs a shared record in a original format used on a physical disk and outputs the record in a new format that is specified for and is compatible with a host computer. The write operation begins with a call to a translation module that inputs a record in a new format and outputs a record in a shared format. The translation module is a dynamically loadable library that can be changed, compiled and linked at run-time.

The virtual device method described above allows a plurality of heterogeneous host computers to share one copy of data stored on a physical disk. In a data storage system using said virtual device method, a plurality of virtual devices is maintained in cache without requiring a copy of data on a physical disk.

While the invention has been described in connection with a preferred embodiment, it is not intended to limit the scope of the invention to the particular form set forth.

Google Exhibit 1002
Google v. LS Cloud Storage Technologies
IPR2023-00777, Page 261 of 280

CLAIMS

What is claimed is:

1. A data storage system comprising:
a network interconnecting a plurality of PCs each of which includes:

an I/O channel adapter for transmitting data over the channel and a network adapter for transmitting control signals and data over the network;

front-end software for handling I/O requests arriving to the I/O channel adapter and the network adapter;

cache manager software for handling data stored in cash memory of the PC, said cache memory comprises a portion of a distributed cache memory stored in the plurality of PCs interconnected by the network;

back-end software for handling reads and writes to disks; and

a configuration manager software module for managing resources in the cache manager to ensure consistency of data stored in the distributed cache.

2. The system of claim 1, wherein the configuration manager includes software that checks:

if an access mode is set to exclusive mode, and if so data storage subsystems caches both reads and writes and the data storage system sends invalidate messages to remote storage systems; and

if the access mode is set to shared, the storage system caches only reads; and

if the access mode is set to no-access, the configuration manager rejects all requests directed to the data storage system.

3 The system of claim 1 wherein the configuration manager comprises software for synchronizing configuration files on remote storage systems comprising the following modulars:

software for receiving a request for an update of a configuration file;

software for suspending execution of configuration managers on remote nodes;

Google Exhibit 1002
Google v. LS Cloud Storage Technologies
IPR2023-00777, Page 262 of 280

software for updating configuration files on remote nodes;

software for resuming execution of remote configuration managers.

4. The system of claim 1, wherein PCs are using off-the-shelf hardware components.

5. A method for concurrent data sharing between a plurality of heterogeneous host computers each using a virtual device that permits mapping between a plurality of heterogeneous host computers and one physical device.

6. A method as claimed in claim 5 wherein the operations of the virtual device comprises:

initialization operation that registers a virtual device in an operating system of a heterogeneous host; and

write operation comprising the steps of translating a record into a shared record format and writing shared record to a physical device; and

read operation comprising the steps of reading a shared record and translating the record into a new format compatible with a host computer.

7. A method for sharing data between two or more heterogeneous host computers employing different data storage formats and connected to a data storage system, comprising:

reading a record in a format compatible with a first computer into a cache memory of a data storage system,

identifying a translation module defined in a configuration file for the second computer; and

translating said record into a format compatible with the second computer and;

writing said translated record into the cache memory.

Abstract of the Disclosure

A data storage system comprising a network of PCs each of which includes a cache memory, I/O channel adapter for transmitting data over the channel and a

Google Exhibit 1002
Google v. LS Cloud Storage Technologies
IPR2023-00777, Page 263 of 280

network adapter for transmitting control signals and data over the network. In one embodiment, a method for managing resources in a cache manager ensures consistency of data stored in the distributed cache. In another embodiment, a method for sharing data between two or more heterogeneous hosts including the steps of: reading a record in a format compatible with one computer; identifying a translation module with the second computer; translating the record into a format compatible with the second computer and writing said translated record into a cache memory.

Google Exhibit 1002
Google v. LS Cloud Storage Technologies
IPR2023-00777, Page 264 of 280

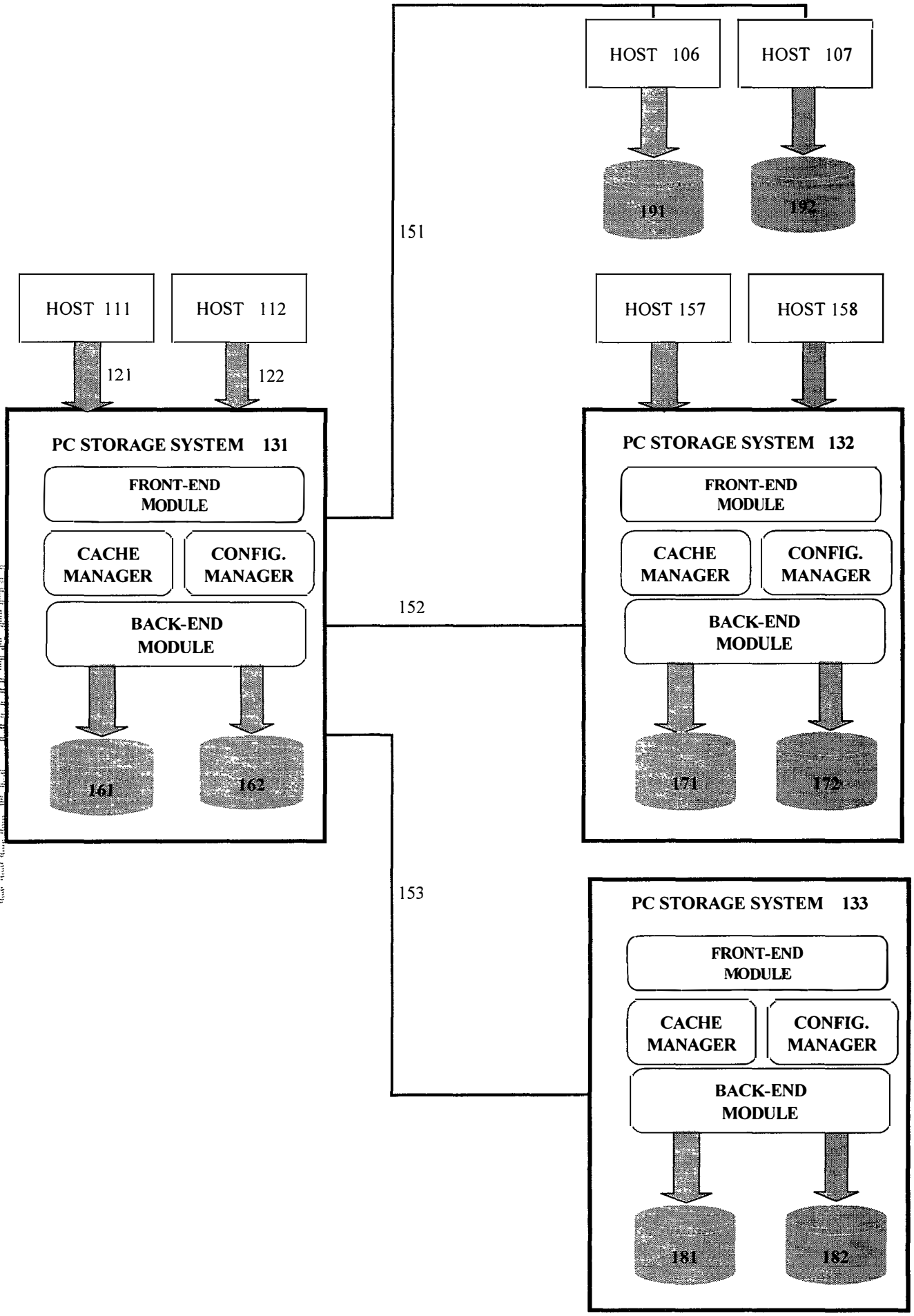

Figure 1. Data Storage System Configurations

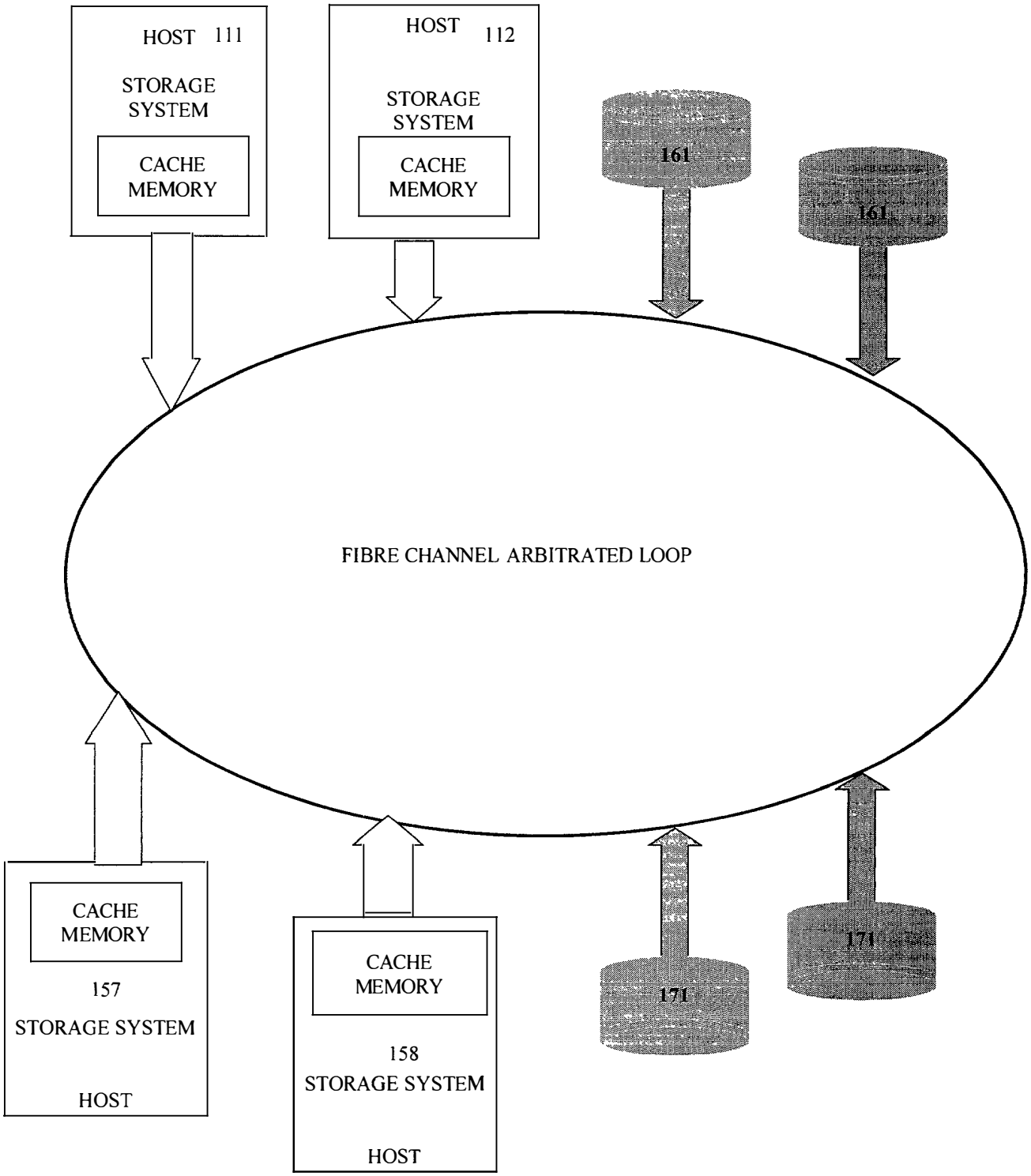

FIG. 2 FIBRE CHANNEL ARBITRATED LOOP FOR (FCAL)

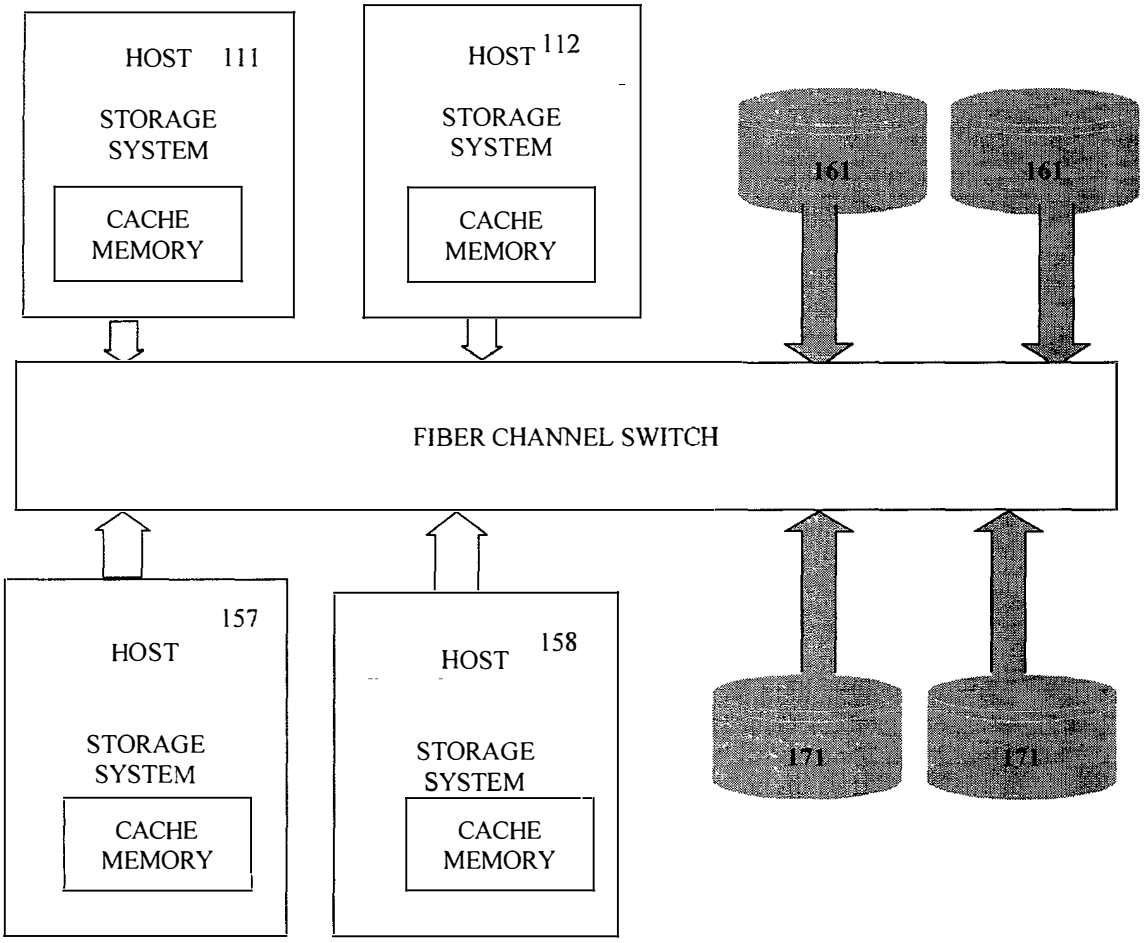

FIG. 2A FIBER CHANNEL SWITCH

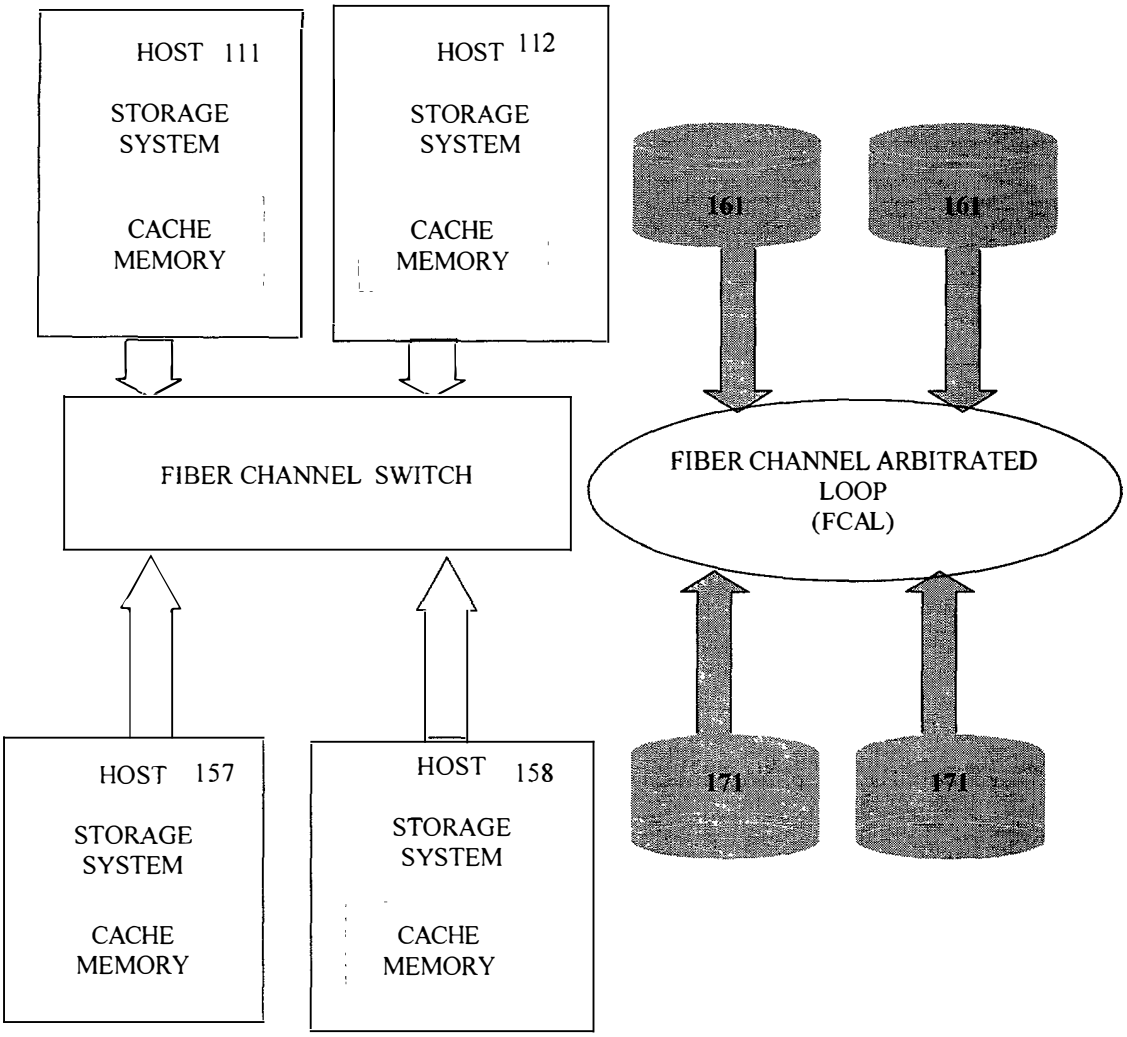

FIG. 2B FIBER CHANNEL SWITCH FOR HOST COMPUTERS AND FIBRE CHANNEL ARBITRATED LOOP FOR STORAGE

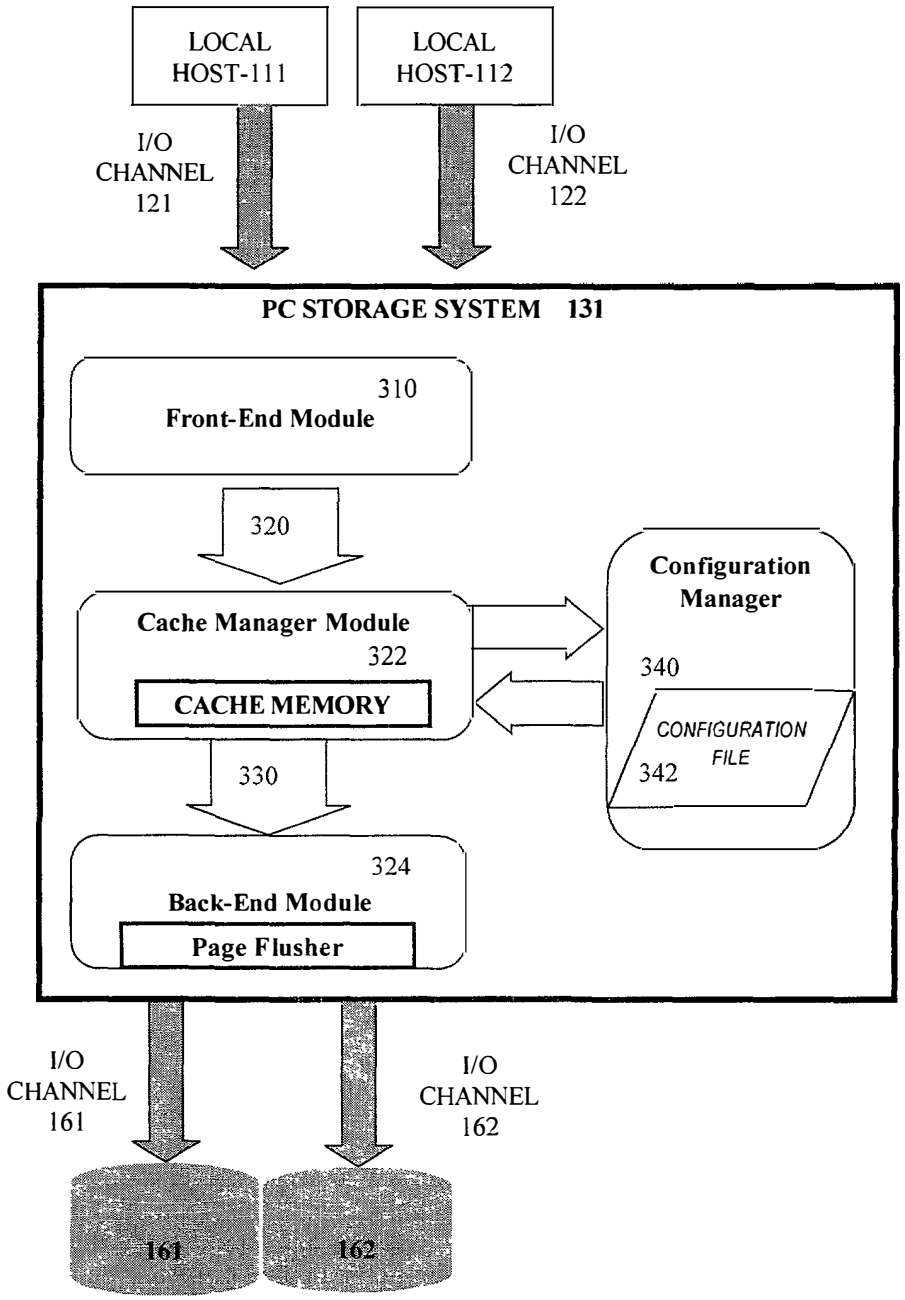

FIG. 3 PC STORAGE SYSTEM.

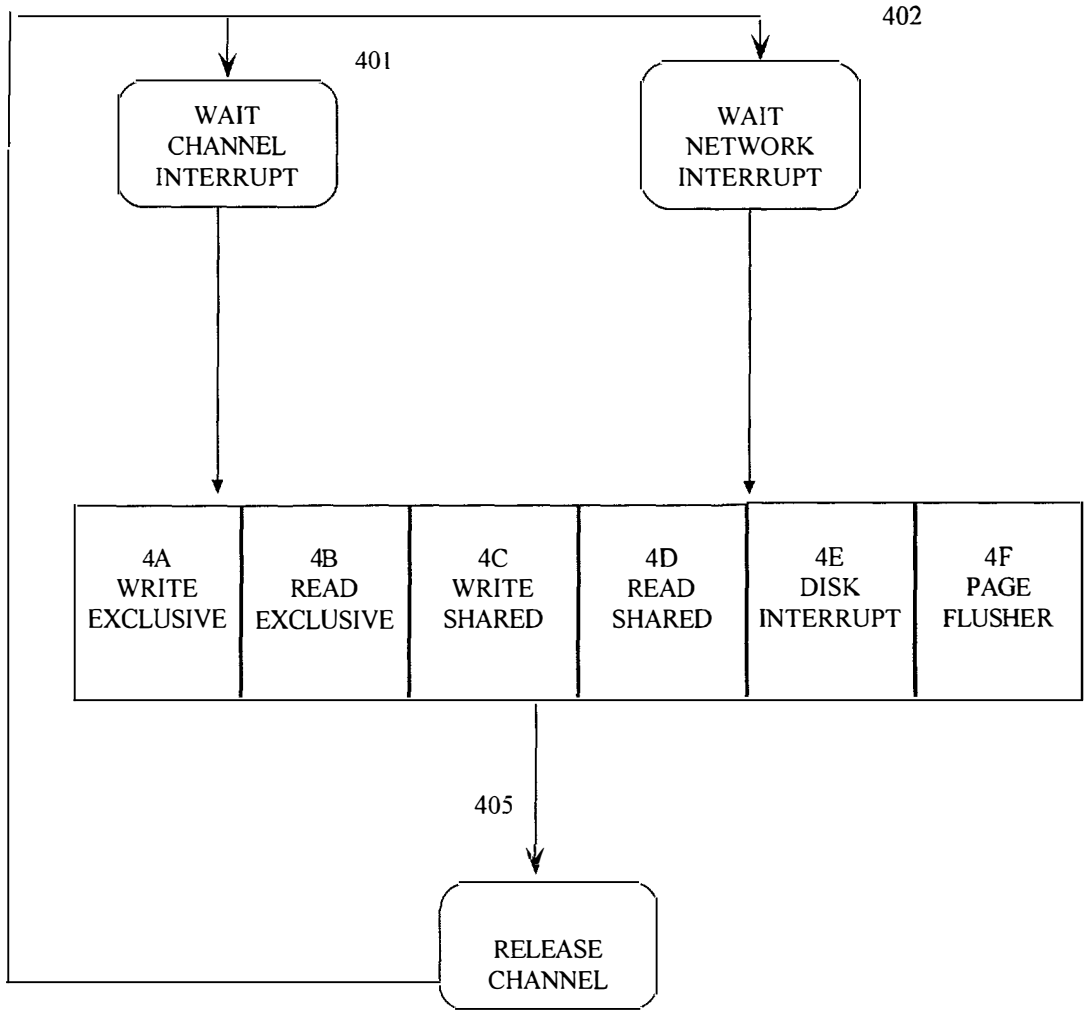

HOSTS 1 2 3 .....N

VOL.
1.
2.
3.

MODE = SHARED/EXCLUSIVE

M.

450

VOLUME ACCESS TABLE

FIG. 4 READ/WRITE FLOWCHART OVERVIEW

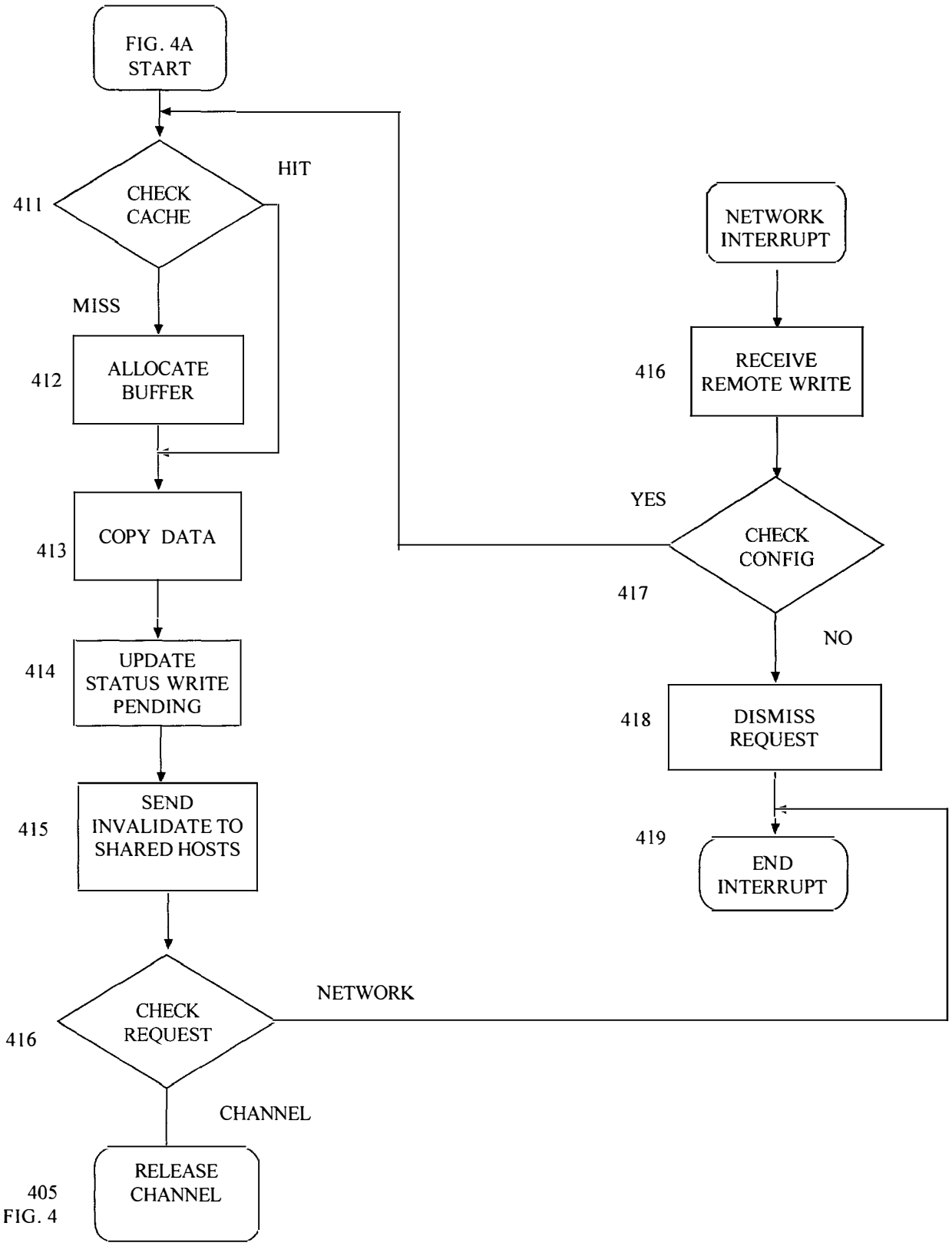

FIG. 4A WRITE EXCLUSIVE

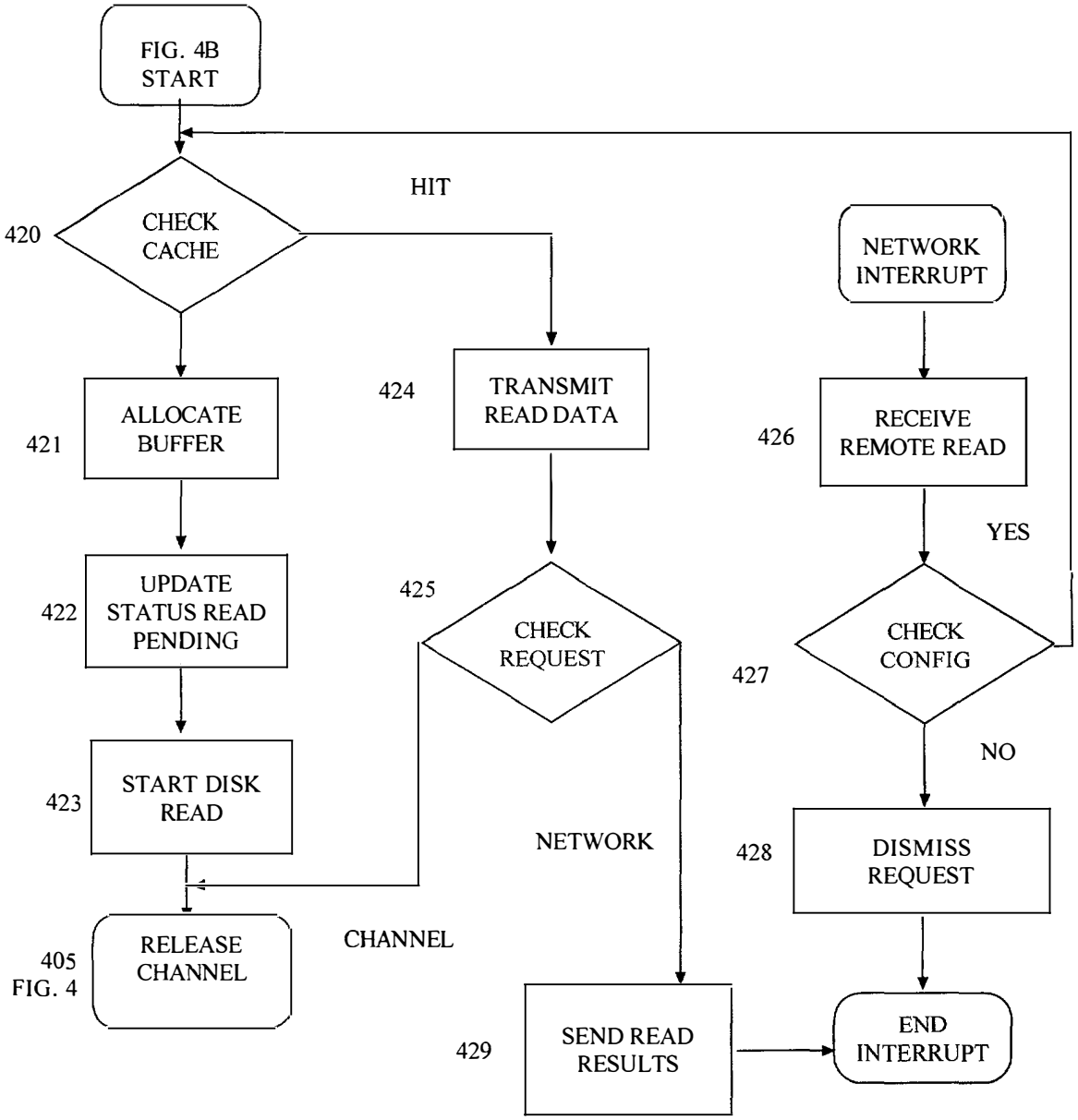

FIG. 4B READ EXCLUSIVE

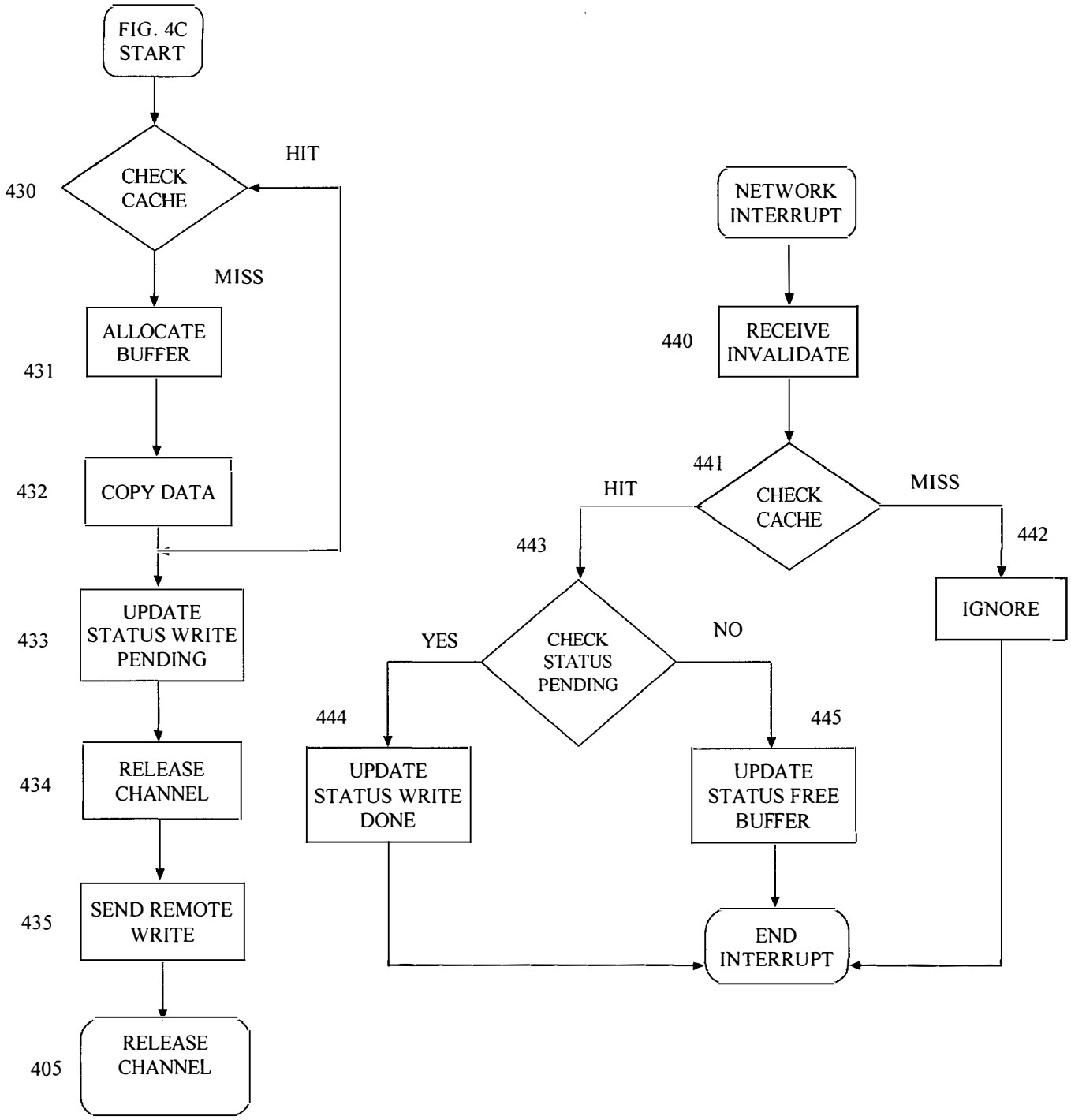

FIG. 4C WRITE SHARED

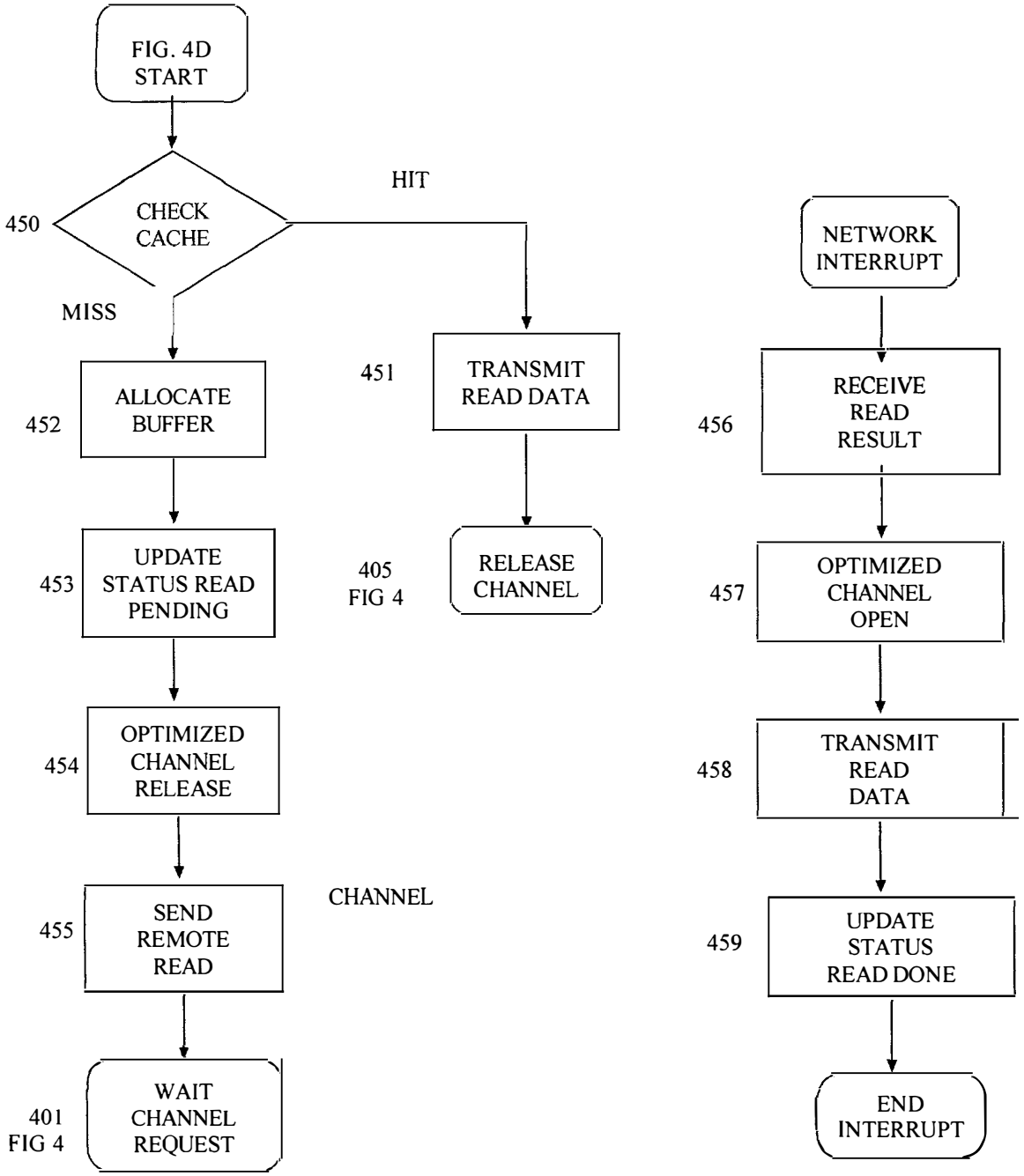

FIG. 4D READ SHARED

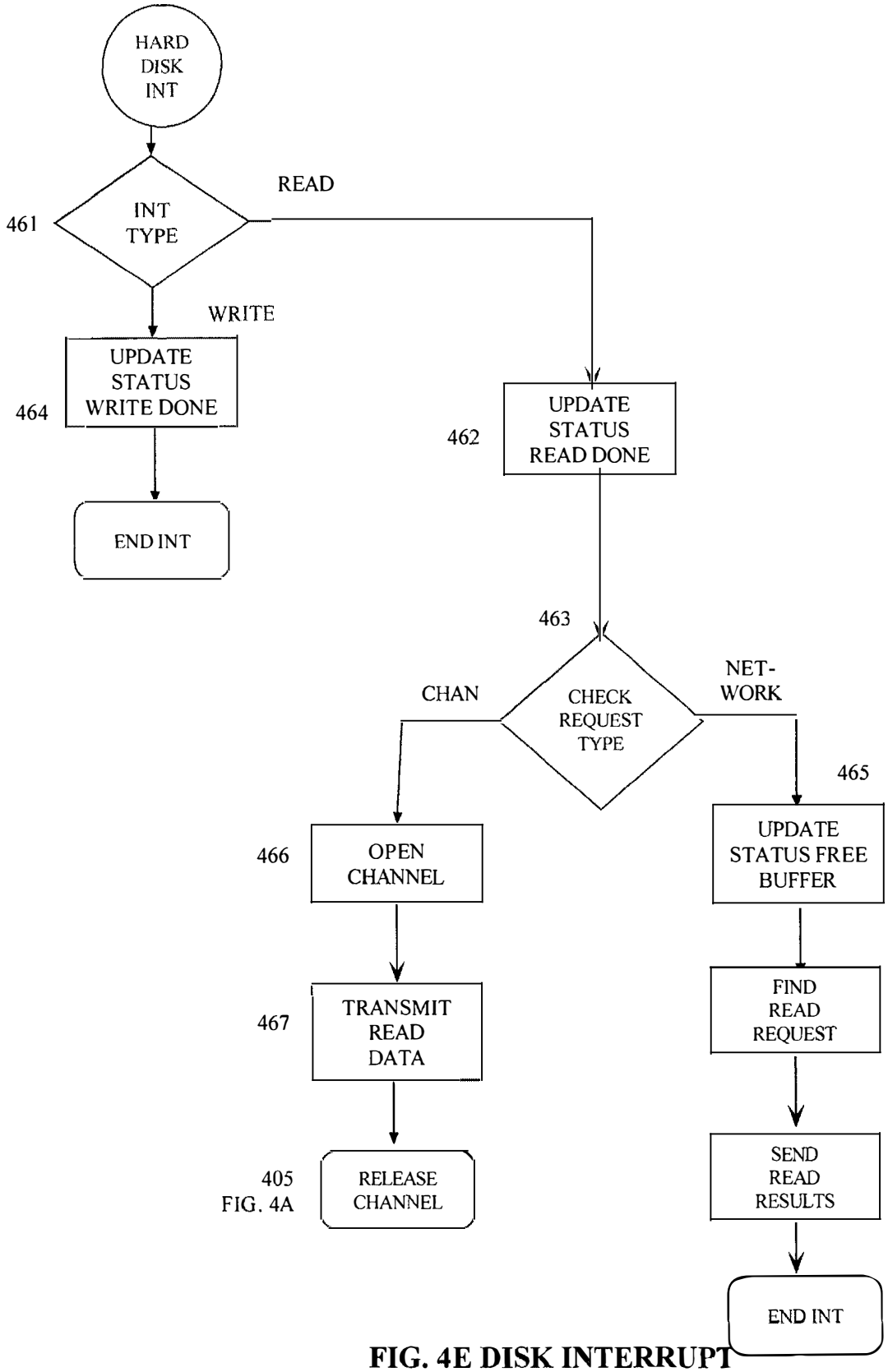

FIG. 4E DISK INTERRUPT

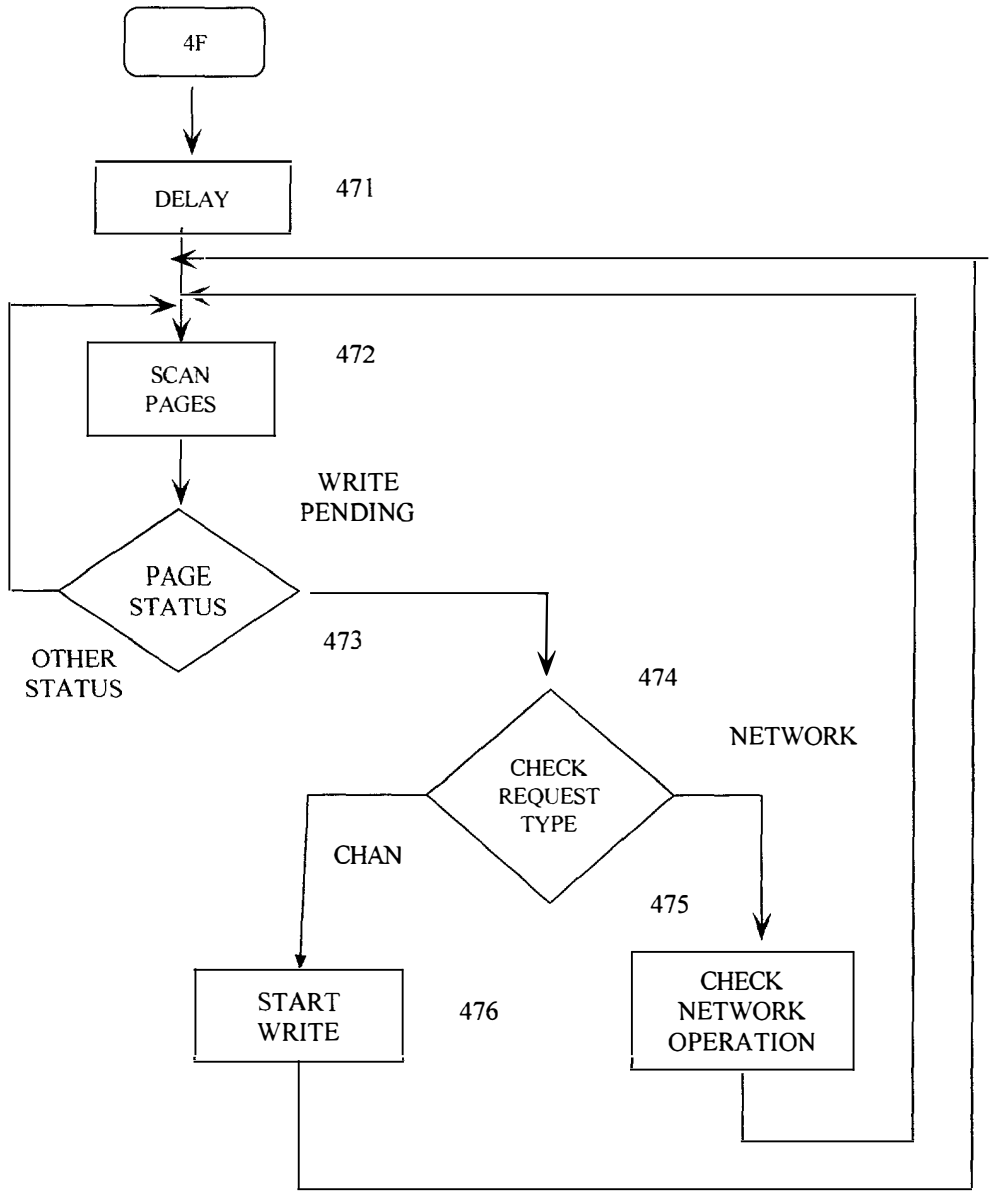

FIG. 4F MEMORY FLUSHER

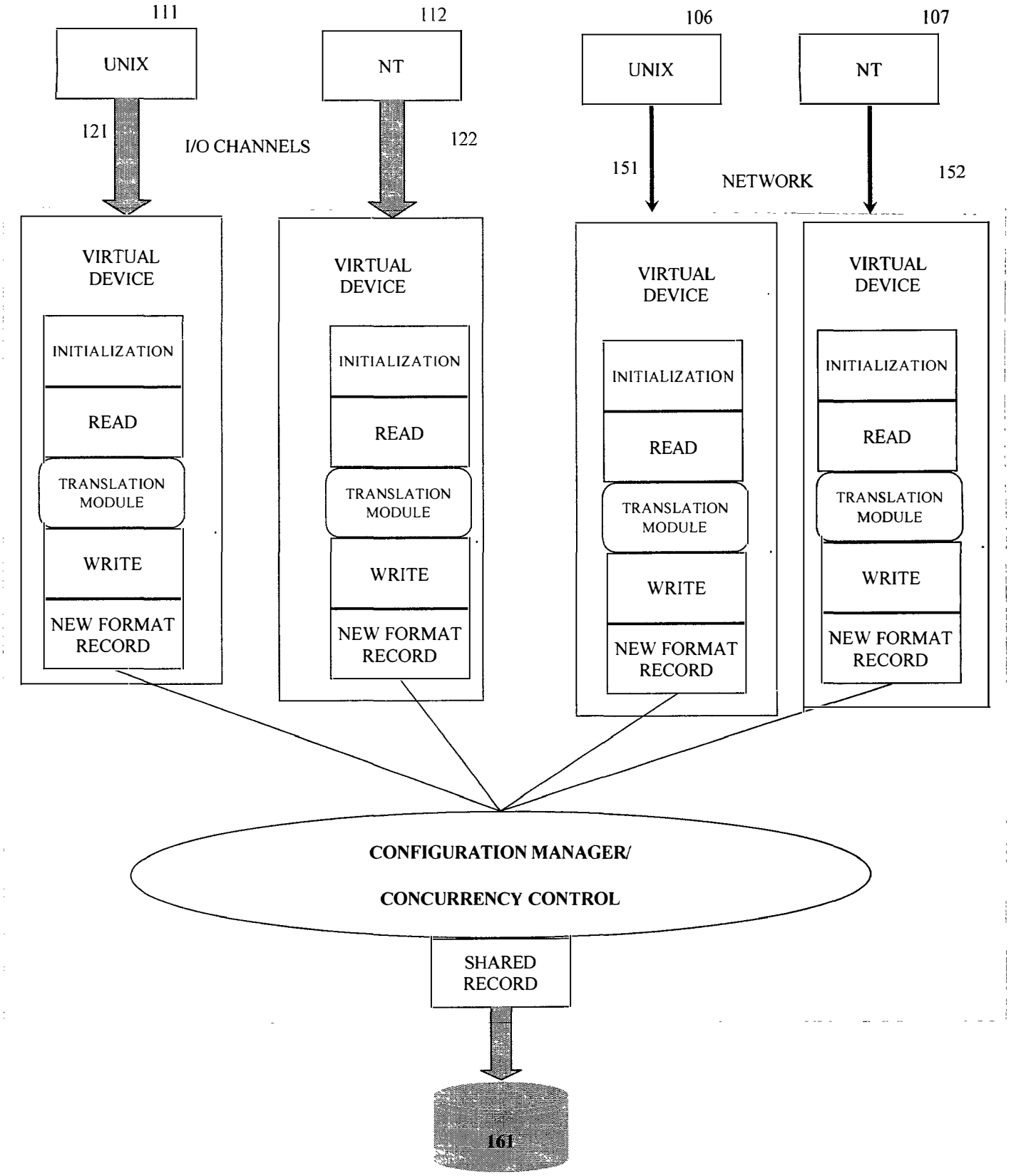

FIG. 5 DATA SHARING

Please type a plus sign (+) inside this box → ☐

PTO/SB/01 (8-96)
Approved for use through 9/30/96. OMB 0651-0032
Patent and Trademark Office: U.S. DEPARTMENT OF COMMERCE

Under the Paperwork Reduction Act of 1995, no persons are required to respond to a collection of information unless it contains a valid OMB control number.

DECLARATION FOR UTILITY OR DESIGN PATENT APPLICATION

☑ Declaration Submitted with Initial Filing OR ☐ Declaration Submitted after Initial Filing

Attorney Docket Number	
First Named Inventor	ILYA GERTNER
COMPLETE IF KNOWN	
Application Number	
Filing Date	
Group Art Unit	
Examiner Name	

As a below named inventor, I hereby declare that:

My residence, post office address, and citizenship are as stated below next to my name.

I believe I am the original, first and sole inventor (if only one name is listed below) or an original, first and joint inventor (if plural names are listed below) of the subject matter which is claimed and for which a patent is sought on the invention entitled :

NETWORK OF DATA STORAGE SUBSYSTEMS AND METHOD FOR USING SAME

(Title of the Invention)

the specification of which

☑ is attached hereto

OR

☐ was filed on (MM/DD/YYYY) ☐ as United States Application Number or PCT International

Application Number ☐ and was amended on (MM/DD/YYYY) ☐ (if applicable).

I hereby state that I have reviewed and understand the contents of the above identified specification, including the claims, as amended by any amendment specifically referred to above.

I acknowledge the duty to disclose information which is material to patentability as defined in Title 37 Code of Federal Regulations, § 1.56.

I hereby claim foreign priority benefits under Title 35, United States Code §119 (a)-(d) or § 365(b) of any foreign application(s) for patent or inventor's certificate, or §365 (a) of any PCT international application which designated at least one country other than the United States of America, listed below and have also identified below, by checking the box, any foreign application for patent or inventor's certificate, or of any PCT international application having a filing date before that of the application on which priority is claimed.

Prior Foreign Application Number(s)	Country	Foreign Filing Date (MM/DD/YYYY)	Priority Not Claimed	Certified Copy Attached? YES	NO
			☐	☐	☐
			☐	☐	☐
			☐	☐	☐
			☐	☐	☐
			☐	☐	☐
			☐	☐	☐

☐ Additional foreign application numbers are listed on a supplemental priority sheet attached hereto:

I hereby claim the benefit under Title 35, United States Code § 119(e) of any United States provisional application(s) listed below.

Application Number(s)	Filing Date (MM/DD/YYYY)	
		☐ Additional provisional application numbers are listed on a supplemental priority sheet attached hereto.

Burden Hour Statement: This form is estimated to take 0.4 hours to complete. Time will vary depending upon the needs of the individual case. Any comments on the amount of time you are required to complete this form should be sent to the Chief Information Officer, Patent and Trademark Office, Washington, DC 20231. DO NOT SEND FEES OR COMPLETED FORMS TO THIS ADDRESS. SEND TO: Commissioner of Patents and Trademarks, Washington, DC 20231.

Google Exhibit 1002
Google v. LS Cloud Storage Technologies
IPR2023-00777, Page 278 of 280

Please type a plus sign (+) inside this box → ☐

PTO/SB/01 (8-96)
Approved for use through 9/30/98. OMB 0651-0032
Patent and Trademark Office: U.S. DEPARTMENT OF COMMERCE

Under the Paperwork Reduction Act of 1995, no persons are required to respond to a collection of information unless it contains a valid OMB control number.

DECLARATION

I hereby claim the benefit under Title 35, United States Code §120 of any United States application(s), or §365(c) of any PCT international application designating the United States of America, listed below and, insofar as the subject matter of each of the claims of this application is not disclosed in the prior United States or PCT international application in the manner provided by the first paragraph of Title 35, United States Code §112, I acknowledge the duty to disclose information which is material to patentability as defined in Title 37, Code of Federal Regulations §1.56 which became available between the filing date of the prior application and the national or PCT international filing date of this application.

U.S. Parent Application Number	PCT Parent Number	Parent Filing Date (MM/DD/YYYY)	Parent Patent Number (if applicable)

☐ Additional U.S. or PCT international application numbers are listed on a supplemental priority sheet attached hereto.

As a named inventor, I hereby appoint the following registered practitioner(s) to prosecute this application and to transact all business in the Patent and Trademark Office connected therewith:

Name	Registration Number	Name	Registration Number

☐ Additional registered practitioner(s) named on a supplemental sheet attached hereto.

Direct all correspondence to:

Name	ILYA GERTNER				
Address	NETWORK DISK, INC.				
Address	5 GASLIGHT LANE				
City	FRAMINGHAM	State	MA	ZIP	01701
Country	U.S.A.	Telephone	(508) 872-5886	Fax	(508) 872-2414

I hereby declare that all statements made herein of my own knowledge are true and that all statements made on information and belief are believed to be true; and further that these statements were made with the knowledge that willful false statements and the like so made are punishable by fine or imprisonment, or both, under Section 1001 of Title 18 of the United States Code and that such willful false statements may jeopardize the validity of the application or any patent issued thereon.

Name of Sole or First Inventor: ☐ A petition has been filed for this unsigned inventor

Given Name	ILYA	Middle Initial		Family Name	GERTNER	Suffix e.g. Jr.	
Inventor's Signature	Ilya Gertner					Date	1/8/98
Residence: City	FRAMINGHAM	State	MA	Country	USA	Citizenship	US
Post Office Address	5 GASLIGHT LANE						
Post Office Address							
City	FRAMINGHAM	State	MA	Zip	01701	Country	USA

☐ Additional inventors are being named on supplemental sheet(s) attached hereto

Google Exhibit 1002
Google v. LS Cloud Storage Technologies
IPR2023-00777, Page 279 of 280

United States Patent & Trademark Office

Office of Initial Patent Examination – Scanning Division

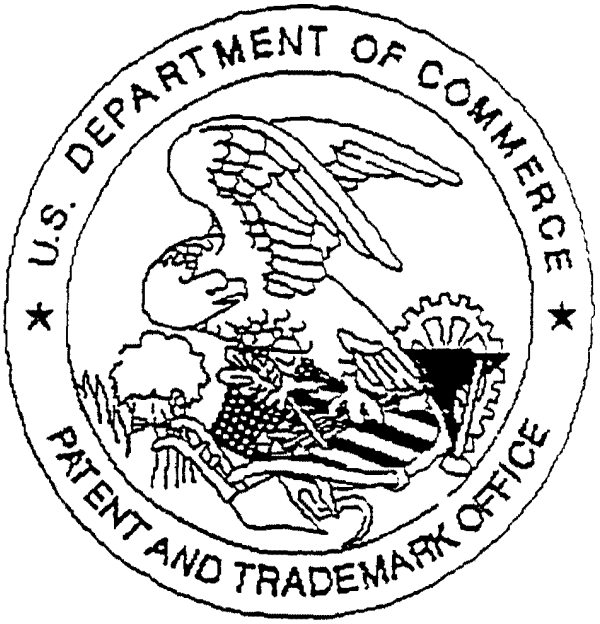

Application deficiencies were found during scanning:

☐ Page(s)_____ of Transmittal (Document title) were not present for scanning.

☐ Page(s)_____ of _____ (Document title) were not present for scanning.

☐ Scanned copy is best available.

Google Exhibit 1002
Google v. LS Cloud Storage Technologies
IPR2023-00777, Page 280 of 280