IN THE UNITED STATES DISTRICT COURT
FOR THE EASTERN DISTRICT OF TEXAS
MARSHALL DIVISION

POLARIS POWERLED TECHNOLOGIES, LLC, *Plaintiff,* v. SAMSUNG ELECTRONICS AMERICA, INC., SAMSUNG ELECTRONICS CO., LTD., and SAMSUNG DISPLAY CO., LTD, *Defendants.*	Case No. 2:17-cv-00715-JRG

CLAIM CONSTRUCTION MEMORANDUM OPINION AND ORDER

Before the Court is the opening claim construction brief of Polaris PowerLED Technologies, LLC ("Plaintiff") (ECF No. 113, filed on October 5, 2018),[1] the response of Samsung Electronics America, Inc., Samsung Electronics Co., Ltd. and Samsung Display Co., Ltd. (collectively "Defendants") (ECF No. 121, filed on October 19, 2018), and Plaintiff's reply (ECF No. 123, filed on October 26, 2018). The Court held a hearing on the issues of claim construction on November 15, 2018. Having considered the arguments and evidence presented by the parties at the hearing and in their briefing, the Court issues this Order.

[1] Citations to the parties' filings are to the filing's number in the docket (ECF No.) and pin cites are to the page numbers assigned through ECF.

Table of Contents

I. BACKGROUND 3

II. LEGAL PRINCIPLES 6

A. Claim Construction 6

B. Departing from the Ordinary Meaning of a Claim Term 8

III. PERSON OF ORDINARY SKILL IN THE ART 10

IV. CONSTRUCTION OF DISPUTED TERMS 10

A. The "multiplier" and "multiplying" terms. 10

B. The "dark level bias" terms 21

C. "an overdrive clamp circuit coupled to the brightness control signal to limit its amplitude to a predefined range" 26

V. CONCLUSION 29

I. BACKGROUND

Plaintiff alleges infringement of U.S. Patent No. 8,223,117 (the "'117 Patent" or the "Patent"). The '117 Patent is entitled Method and Apparatus to Control Display Brightness with Ambient Light Correction. The application leading to the '117 Patent was filed on December 17, 2008 and it issued on July 17, 2012. The '117 Patent includes a priority claim to an application filed on February 9, 2004.

In general, the '117 Patent is directed to technology for setting the brightness level of an electronic display based on the ambient light level. The basic technology may be understood with reference to Figures 1 and 3, reproduced here and annotated by the Court. Figure 1 is a block diagram illustrating the main functions of an exemplary brightness control circuit. Three signals, a "dark level bias," "light sensor" (in red), and a user input "dimming control" (in green) are combined to create a brightness control signal to set the brightness of a display. Figure 3 depicts the brightness control signal as a function of sensed light level ("Ambient Light" in red) and user input ("Duty" in green). As the ambient light level increases, so too does the amplitude of the brightness control signal. The amplitude is clamped so it does not exceed a certain level and thereby overdrive the display. This results in a flat top to the curves in Figure 3 at a 100% of the display saturation voltage. The "dark level bias" and user input combine to provide a minimum display brightness when the ambient light level is near zero (i.e., when it is dark). '117 Patent col.4 l.45 – col.5 l.14, col.5 l.44 – col.6 l.21.

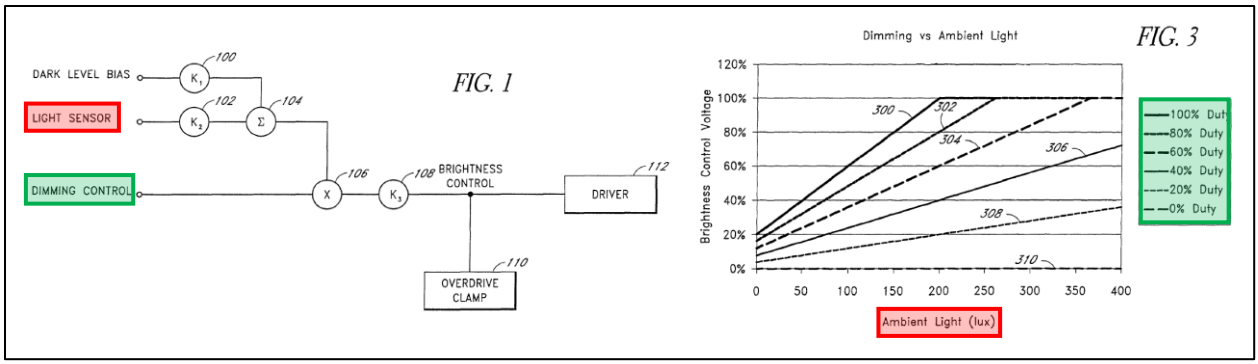

Figure 4, reproduced here and annotated by the Court, is a schematic diagram of a brightness control circuit with a multiplier to selectively combine signals from the light sensor (402 in red) and user input ("PWM input" in green). When automatic mode is selected (AUTO = high), the light-sensor ("ISRC") and user-input ("dutycycle") signals are multiplied together as shown in the brightness-control-signal (BCS1) equation reproduced here. In addition to multiplying the user-input and light-sensor signals, the circuit adds a dark level bias to the light sensor signal and clamps the amplitude of the brightness control signal approximately at the light sensor's compliance voltage. When manual mode is selected (AUTO = low), the circuit does not multiply the user-input and light-sensor signals. *Id*. at col.6 l.22 – col.8 l.9.

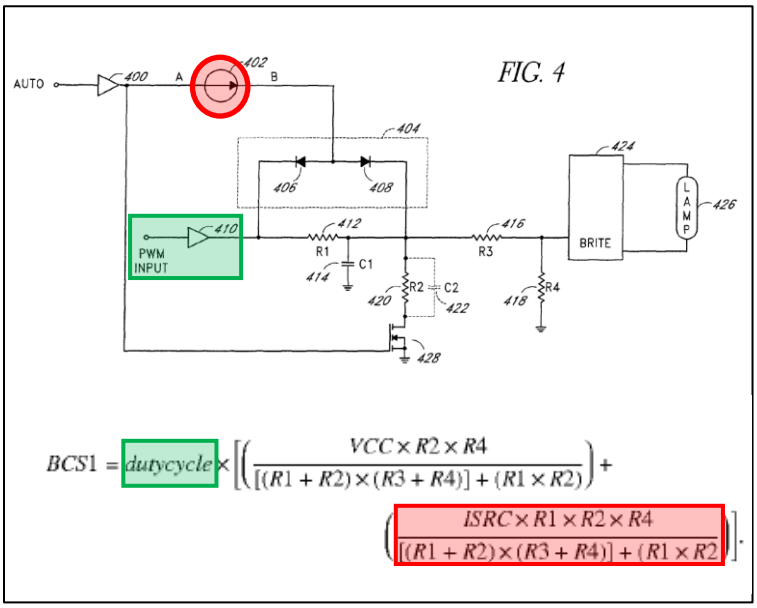

Figure 8, reproduced here and annotated by the Court, is a schematic diagram of another brightness control circuit with a multiplier to selectively combine signals from the light sensor (802 in red) and user input (potentiometer "R3," 812 in green). When automatic mode is selected (AUTO = high), the light-sensor output (ISRC) and user input (potentiometer setting) are multiplied together as shown in the equation reproduced here. In addition to multiplying the

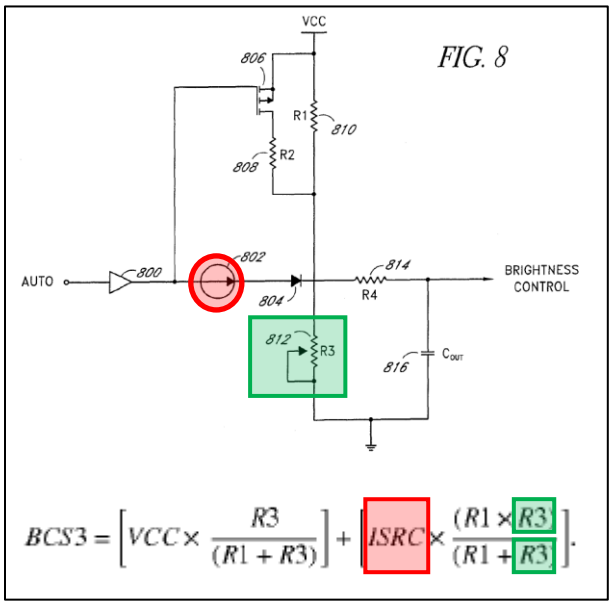

user-input and light-sensor signals, the circuit adds a dark level bias to the light sensor signal and clamps the amplitude of the brightness control signal at the light sensor's compliance voltage. When manual mode is selected (AUTO = low), the circuit does not multiply the user-input and light-sensor signals. *Id*. at col.9 l.37 – col.10 l.32.

The abstract of the Patent provides:

> An ambient light sensor produces a current signal that varies linearly with the level of ambient light. The current signal is multiplied by a user dimming preference to generate a brightness control signal that automatically compensates for ambient light variations in visual information display systems. The multiplying function provides noticeable user dimming control at relatively high ambient light levels.

Claims 1 and 15 of the Patent, exemplary device and method claims respectively, recite as follows:

> **1.** A brightness control circuit with selective ambient light correction comprising:
> a first input configured to receive a user signal indicative of a user selectable brightness setting;
> a light sensor configured to sense ambient light and to output a sensing signal indicative of the ambient light level;
> a multiplier configured to selectively generate a combined signal based on both the user signal and the sensing signal; and
> a dark level bias configured to adjust the combined signal to generate a brightness control signal that is used to control a brightness level of a visible display such that the brightness control signal is maintained above a predetermined level when the ambient light level decreases to approximately zero.
>
> **15.** A method to selectively provide ambient light correction, said method comprising:
> receiving a user input signal indicative of a user selectable brightness setting;
> selectively multiplying the input signal with a sense signal to generate a combined signal, wherein the sense signal indicates an ambient light level; and
> adjusting the combined signal with a dark level bias to generate a brightness control signal for controlling brightness of a visible display such that the brightness control signal is maintained above a predetermined level when the ambient light level decreases to approximately zero.

II. LEGAL PRINCIPLES

A. Claim Construction

"It is a 'bedrock principle' of patent law that 'the claims of a patent define the invention to which the patentee is entitled the right to exclude.'" *Phillips v. AWH Corp.*, 415 F.3d 1303, 1312 (Fed. Cir. 2005) (en banc) (quoting *Innova/Pure Water Inc. v. Safari Water Filtration Sys., Inc.*, 381 F.3d 1111, 1115 (Fed. Cir. 2004)). To determine the meaning of the claims, courts start by considering the intrinsic evidence. *Id.* at 1313; *C.R. Bard, Inc. v. U.S. Surgical Corp.*, 388 F.3d 858, 861 (Fed. Cir. 2004); *Bell Atl. Network Servs., Inc. v. Covad Commc'ns Group, Inc.*, 262 F.3d 1258, 1267 (Fed. Cir. 2001). The intrinsic evidence includes the claims themselves, the specification, and the prosecution history. *Phillips*, 415 F.3d at 1314; *C.R. Bard, Inc.*, 388 F.3d at 861. The general rule—subject to certain specific exceptions discussed *infra*—is that each claim term is construed according to its ordinary and accustomed meaning as understood by one of ordinary skill in the art at the time of the invention in the context of the patent. *Phillips*, 415 F.3d at 1312–13; *Alloc, Inc. v. Int'l Trade Comm'n*, 342 F.3d 1361, 1368 (Fed. Cir. 2003); *Azure Networks, LLC v. CSR PLC*, 771 F.3d 1336, 1347 (Fed. Cir. 2014) ("There is a heavy presumption that claim terms carry their accustomed meaning in the relevant community at the relevant time.") (vacated on other grounds).

"The claim construction inquiry … begins and ends in all cases with the actual words of the claim." *Renishaw PLC v. Marposs Societa' per Azioni*, 158 F.3d 1243, 1248 (Fed. Cir. 1998). "[I]n all aspects of claim construction, 'the name of the game is the claim.'" *Apple Inc. v. Motorola, Inc.*, 757 F.3d 1286, 1298 (Fed. Cir. 2014) (quoting *In re Hiniker Co.*, 150 F.3d 1362, 1369 (Fed. Cir. 1998)). First, a term's context in the asserted claim can be instructive. *Phillips*, 415 F.3d at 1314. Other asserted or unasserted claims can also aid in determining the claim's meaning, because claim terms are typically used consistently throughout the patent. *Id.* Differences among the claim

terms can also assist in understanding a term's meaning. *Id*. For example, when a dependent claim adds a limitation to an independent claim, it is presumed that the independent claim does not include the limitation. *Id*. at 1314–15.

"[C]laims 'must be read in view of the specification, of which they are a part.'" *Id*. (quoting *Markman v. Westview Instruments, Inc.*, 52 F.3d 967, 979 (Fed. Cir. 1995) (en banc)). "[T]he specification 'is always highly relevant to the claim construction analysis. Usually, it is dispositive; it is the single best guide to the meaning of a disputed term.'" *Id*. (quoting *Vitronics Corp. v. Conceptronic, Inc.*, 90 F.3d 1576, 1582 (Fed. Cir. 1996)); *Teleflex, Inc. v. Ficosa N. Am. Corp.*, 299 F.3d 1313, 1325 (Fed. Cir. 2002). "'Although the specification may aid the court in interpreting the meaning of disputed claim language, particular embodiments and examples appearing in the specification will not generally be read into the claims.'" *Comark Commc'ns, Inc. v. Harris Corp.*, 156 F.3d 1182, 1187 (Fed. Cir. 1998) (quoting *Constant v. Advanced Micro-Devices, Inc.*, 848 F.2d 1560, 1571 (Fed. Cir. 1988)); *see also Phillips*, 415 F.3d at 1323. "[I]t is improper to read limitations from a preferred embodiment described in the specification—even if it is the only embodiment—into the claims absent a clear indication in the intrinsic record that the patentee intended the claims to be so limited." *Liebel-Flarsheim Co. v. Medrad, Inc.*, 358 F.3d 898, 913 (Fed. Cir. 2004).

The prosecution history is another tool to supply the proper context for claim construction because, like the specification, the prosecution history provides evidence of how the U.S. Patent and Trademark Office ("PTO") and the inventor understood the patent. *Phillips*, 415 F.3d at 1317. However, "because the prosecution history represents an ongoing negotiation between the PTO and the applicant, rather than the final product of that negotiation, it often lacks the clarity of the specification and thus is less useful for claim construction purposes." *Id.* at 1318; *see also Athletic*

Alternatives, Inc. v. Prince Mfg., 73 F.3d 1573, 1580 (Fed. Cir. 1996) (ambiguous prosecution history may be "unhelpful as an interpretive resource").

Although extrinsic evidence can also be useful, it is "'less significant than the intrinsic record in determining the legally operative meaning of claim language.'" *Phillips*, 415 F.3d at 1317 (quoting *C.R. Bard, Inc.*, 388 F.3d at 862). Technical dictionaries and treatises may help a court understand the underlying technology and the manner in which one skilled in the art might use claim terms, but technical dictionaries and treatises may provide definitions that are too broad or may not be indicative of how the term is used in the patent. *Id*. at 1318. Similarly, expert testimony may aid a court in understanding the underlying technology and determining the particular meaning of a term in the pertinent field, but an expert's conclusory, unsupported assertions as to a term's definition are not helpful to a court. *Id*. Extrinsic evidence is "less reliable than the patent and its prosecution history in determining how to read claim terms." *Id*. The Supreme Court recently explained the role of extrinsic evidence in claim construction:

> In some cases, however, the district court will need to look beyond the patent's intrinsic evidence and to consult extrinsic evidence in order to understand, for example, the background science or the meaning of a term in the relevant art during the relevant time period. *See, e.g., Seymour v. Osborne*, 11 Wall. 516, 546 (1871) (a patent may be "so interspersed with technical terms and terms of art that the testimony of scientific witnesses is indispensable to a correct understanding of its meaning"). In cases where those subsidiary facts are in dispute, courts will need to make subsidiary factual findings about that extrinsic evidence. These are the "evidentiary underpinnings" of claim construction that we discussed in *Markman*, and this subsidiary factfinding must be reviewed for clear error on appeal.

Teva Pharm. USA, Inc. v. Sandoz, Inc., 135 S. Ct. 831, 841 (2015).

B. Departing from the Ordinary Meaning of a Claim Term

There are "only two exceptions to [the] general rule" that claim terms are construed according to their plain and ordinary meaning: "1) when a patentee sets out a definition and acts as his own lexicographer, or 2) when the patentee disavows the full scope of the claim term either in the

specification or during prosecution."[2] *Golden Bridge Tech., Inc. v. Apple Inc.*, 758 F.3d 1362, 1365 (Fed. Cir. 2014) (quoting *Thorner v. Sony Computer Entm't Am. LLC*, 669 F.3d 1362, 1365 (Fed. Cir. 2012)); *see also GE Lighting Solutions, LLC v. AgiLight, Inc.*, 750 F.3d 1304, 1309 (Fed. Cir. 2014) ("[T]he specification and prosecution history only compel departure from the plain meaning in two instances: lexicography and disavowal."). The standards for finding lexicography or disavowal are "exacting." *GE Lighting Solutions*, 750 F.3d at 1309.

To act as his own lexicographer, the patentee must "clearly set forth a definition of the disputed claim term," and "clearly express an intent to define the term." *Id.* (quoting *Thorner*, 669 F.3d at 1365); *see also Renishaw*, 158 F.3d at 1249. The patentee's lexicography must appear "with reasonable clarity, deliberateness, and precision." *Renishaw*, 158 F.3d at 1249.

To disavow or disclaim the full scope of a claim term, the patentee's statements in the specification or prosecution history must amount to a "clear and unmistakable" surrender. *Cordis Corp. v. Boston Sci. Corp.*, 561 F.3d 1319, 1329 (Fed. Cir. 2009); *see also Thorner*, 669 F.3d at 1366 ("The patentee may demonstrate intent to deviate from the ordinary and accustomed meaning of a claim term by including in the specification expressions of manifest exclusion or restriction, representing a clear disavowal of claim scope."). "Where an applicant's statements are amenable to multiple reasonable interpretations, they cannot be deemed clear and unmistakable." *3M Innovative Props. Co. v. Tredegar Corp.*, 725 F.3d 1315, 1326 (Fed. Cir. 2013).

[2] Some cases have characterized other principles of claim construction as "exceptions" to the general rule, such as the statutory requirement that a means-plus-function term is construed to cover the corresponding structure disclosed in the specification. *See, e.g., CCS Fitness, Inc. v. Brunswick Corp.*, 288 F.3d 1359, 1367 (Fed. Cir. 2002).

III. PERSON OF ORDINARY SKILL IN THE ART

The parties submit competing proposals for the definition of one of ordinary skill in the art. Defendants submit:

> [A] person of ordinary skill in the art at the time of filing (March 2003) would have at least a bachelor's degree in electrical engineering, physics, or optics, and at least three (3) years of experience with analog circuit design and optical sensors.

ECF No. 121 at 6. Plaintiff submits:

> A person of ordinary skill in the art at the time of the invention of the '117 patent would have at least a bachelor's degree in electrical engineering, physics, or computer science, or 2-4 years of experience in the field of visual displays and related technologies.

ECF No. 123 at 5 n.2.

The Court understands that these two proposals regarding one of ordinary skill in the art differ. That said, for the purpose of resolving the claim-construction disputes presented to the Court, there is no meaningful difference between the parties competing proposals.

IV. CONSTRUCTION OF DISPUTED TERMS

A. The "multiplier" and "multiplying" terms.

Disputed Term[3]	Plaintiff's Proposed Construction	Defendants' Proposed Construction
"a multiplier configured to selectively generate a combined signal based on both the user signal and the sensing signal" • '117 Patent Claim 1	a multiplier configured to generate on a selective basis a combined signal based on both the user signal and the sensing signal	a multiplier configured to generate a combined signal that is the mathematical product of the user signal and the sensing signal

[3] For all term charts in this order, the claims in which the term is found are listed with the term but: (1) only the highest-level claim in each dependency chain is listed and (2) only asserted claims identified in the parties' P.R. 4-5 Joint Notice Regarding Claim Construction Chart (ECF No. 129) are listed.

Disputed Term[3]	Plaintiff's Proposed Construction	Defendants' Proposed Construction
"selectively multiplying the input signal with a sense signal to generate a combined signal, wherein the sense signal indicates an ambient light level" • '117 Patent Claim 15	multiplying on a selective basis the input signal with a sense signal to generate a combined signal, wherein the sense signal indicates an ambient light level	multiplying the input signal with a sense signal to generate a combined signal that is the mathematical product of the input signal and the sense signal

Because the parties' arguments and proposed constructions with respect to these terms are related, the Court addresses the terms together.

<u>The Parties' Positions</u>

Plaintiff submits: These terms are directed to combining two signals using multiplication but are not limited to combinations that are the mathematical product of the signals. The '117 Patent discloses and claims embodiments of combinations that are not the simple product of the two signals. For example, Claim 3, which depends from Claim 1, recites: "the multiplier multiplies a sum of the user signal and the sensing signal by the dark level bias to generate an output signal corresponding to the brightness control signal." In these embodiments, the multiplier generates a combined signal "based on" the two signals, and though the combination involves multiplication, it is not limited to the product of the two signals. Further, the claims as originally filed included a "mathematical product" limitation that was deleted during prosecution. It would be improper to construe the multiplier/multiplying terms to be limited to a mathematical product when doing so would exclude exemplary embodiments, reinsert a limitation that was deleted during prosecution, and give no effect to "based on" in the claim language. ECF No. 113 at 11–20, 22–27.

Plaintiff further submits: "selectively" and "wherein the sense signal indicates an ambient light level" must be given effect in the construction of the multiplier/multiplying terms. Defendants' proposed constructions improperly delete these terms. *Id*. at 9–11, 20–22, 27.

In addition to the claims themselves, Plaintiff cites the following intrinsic and extrinsic evidence to support its position: **Intrinsic evidence**: ’117 Patent fig.1, col.1 ll.60–67, col.2 ll.7–27, col.2 ll.31–43, col.3 ll.24–37, col.3 ll.48–51, col.4 ll.46–52, col.5 ll.37–38, col.7 ll.18–32, col.12 ll.15–18. ’117 Patent File Wrapper March 13, 2009 Preliminary Amendment (Plaintiff’s Ex. D, ECF No. 113-5), May 20, 2009 Supplemental Preliminary Amendment (Plaintiff’s Ex. E, ECF No. 113-6), November 7, 2011 Office Action (Plaintiff’s Ex. F, ECF No. 113-7), January 23, 2012 Response to Office Action (Plaintiff’s Ex. G, ECF No. 113-8), March 14, 2012 Notice of Allowability (Plaintiff’s Ex. H, ECF No. 113-9). **Extrinsic evidence**: *American Heritage Dictionary* (3d ed. 1996), “selective” (Plaintiff’s Ex. B, ECF No. 113-3); *Random House Webster’s College Dictionary* (2001), “selective” (Plaintiff’s Ex. C, ECF No. 113-4).

Defendants respond: In the context of the surrounding claim language, the multiplier/multiplying terms are properly understood to: (1) receive two input signals, (2) combine those signals by multiplying them, and then (3) output the combined signal for separate adjustment by the “dark level bias.” This properly does not encompass embodiments in which the output of the multiplier—the “combined signal”—is not separately adjusted by the “dark level bias.” For example, it does not encompass embodiments in which the “dark level bias” is included as part of the “combined signal” instead of being applied to the “combined signal,” such as the embodiment depicted in Figure 1 of the ’117 Patent. The Patent describes multiplier or multiplying combinations as necessarily producing a “mathematical product” of the combined signals. This comports with the customary meaning of the term in the art: a multiplier calculates the mathematical product of two inputs. In the Patent and in the art, the multiplier/multiplying terms do not perform operations other than multiplication. Claim 3 does not change this. The claim is indefinite since it requires the “dark level bias” to be an input to the multiplier, but Claim 1, from

which Claim 3 depends, requires the "dark level bias" to be applied after the multiplier stage. Further, Claim 3 recites the "multiplier multiplies a sum [of two signals]" by the "dark level bias"—it does not generate the sum of the two signals. Finally, issued Claim 1 was modified during prosecution not to delete the requirement that the multiplier create a mathematical product, but to clarify that the inputs to the multiplier are "both" the user signal and the sensing signal. Issued Claim 15 was not modified in this way. ECF No. 121 at 7–20.

Defendants further respond: "Selectively" in the claim language is given effect in its proposed construction in that the construction clarifies "that the combined signal is a 'mathematical product' of both the user signal and the sensing signal." In any event, Defendants are not opposed to including "selectively" or "on a selective basis" in the construction. *Id*. at 16.

In addition to the claims themselves, Defendants cite the following intrinsic and extrinsic evidence to support their position: **Intrinsic evidence**: '117 Patent figs.1–3, col.1 l.65 – col.2 l.3, col.2 ll.31–36, col.3 ll.31–37; '117 Patent File Wrapper May 20, 2009 Supplemental Preliminary Amendment (Defendants' Ex. H, ECF No. 121-9); U.S. Patent Application No. 60/543,094[4] (February 9, 2004) (Defendants' Ex. B, ECF No. 121-3); U.S. Application No. 11/023,295[5] File Wrapper December 5, 2007 Response to Office Action (Defendants' Ex. C, ECF No. 121-4). **Extrinsic evidence**: *IEEE 100: The Authoritative Dictionary of IEEE Standards Terms* (7th ed. 2000), "multiplier" (Defendants' Ex. D, ECF No. 121-5); Stan Gibilisco, *The Illustrated Dictionary of Electronics* (8th ed. 2001), "digital multiplier" (Defendants' Ex. E, ECF No. 121-6); Jan Rabaey, et al., *Digital Integrated Circuits: A Design Perspective*, "multiplier" (2d ed. 2004)

[4] The '117 Patent includes a claim of priority to U.S. Patent Application No. 60/543,094. '117 Patent, at [60] Related U.S. Application Data.
[5] The '117 Patent includes a claim of priority to U.S. Patent Application No. 11/023,295. '117 Patent, at [63] Related U.S. Application Data.

(Defendants' Ex. F, ECF No. 121-7); John Wakerly, *Digital Design: Principles & Practices* (3d ed. 1999), "combinatorial multiplier" (Defendants' Ex. G, ECF No. 121-8); Hobbs Decl.[6] at ¶¶ 25–32, 36–39 (Defendants' Ex. A, ECF No. 121-2 at 10–18).

Plaintiff replies: The claims require that the "combined signal" generated by the multiplier/multiplying be "based on" the user/input signal and the sensing/sense signal, not that it be the "mathematical product" of those signals. This comports with the Patent's description of the invention, which provides using a "multiplying function" that includes but is not limited to generating a "mathematical product." For instance, as described and claimed, a multiplying function may perform both multiplication and addition (e.g., $y = mx + b$). The extrinsic evidence relied upon by Defendants is of little value since it is all divorced from the Patent's specification and relates only to hardware when the Patent includes software implementations. ECF No. 123 at 5–9.

Plaintiff cites further **intrinsic evidence** to support its position: U.S. Application No. 11/023,295 File Wrapper December 5, 2007 Response to Office Action (Defendants' Ex. C, ECF No. 121-4).

Analysis

The fundamental issue in dispute is whether the "combined signal" generated by the "multiplier" of Claim 1 and the "multiplying" of Claim 15 is necessarily limited to only to the "mathematical product" of the user/input signal and the sensing/sense signal. While "multiplier" and "multiplying" require generating a mathematical product, in the context of the '117 Patent

[6] Declaration of Dr. Philip C.D. Hobbs, Ph.D. The Court notes that the "declaration" submitted by Dr. Hobbs is not a sworn statement, it is an unsworn expert report. As such, its admissibility in a claim-construction proceeding is suspect. Nevertheless, Plaintiff did not object and the Court considered Dr. Hobbs' statements in ruling on the claim-construction issues presented herein.

they are not limited to generating a product—the "combined signal" is not necessarily solely the mathematical product of the signals combined.

The language of Claim 15, "selectively multiplying the input signal with a sense signal to generate a combined signal," expressly requires multiplying the input signal by the sense signal. This plainly means that the combined signal includes the product of the input and sense signals. As set forth below, this does not mean that the combined signal is limited to that product.

Understanding the language of Claim 1, "a multiplier configured to selectively generate a combined signal based on both the user signal and the sensing signal," requires understanding a "multiplier." The Court agrees with Defendants that a multiplier multiplies. More specifically, a multiplier multiplies the inputs of the multiplier. The exemplary multipliers of the Patent all generate the product of their inputs. For example, the Figure 4 multiplier configured to combine "a light sensor output with a user adjustable PWM logic signal" generates the product of those two inputs. '117 Patent col.6 ll.22–32, col.7 ll.15–23. Similarly, the Figure 8 multiplier "to combine a light sensor output with a user adjustable potentiometer" generates the product of those two inputs. *Id*. at col.9 ll.38–46, col.10 ll.5–13. Likewise, the Figure 9 multiplier "to combine a light sensor output with a user adjustable digital word" generates the product of these two inputs. *Id*. at col.10 ll.33–43, col.11 ll.6–14. That a multiplier multiplies its inputs together comports with the customary meaning of the term. *See, e.g.*, *IEEE 100: The Authoritative Dictionary of IEEE Standards Terms* 716 (7th ed. 2000) (defining "multiplier" as: "A device that has two or more inputs and whose output is a representation of the product of the quantities represented by the input signals."), ECF No. 121-5 at 11. Thus, the combined signal generated by the multiplier includes the product of the user and sensing signals. As set forth below, this does not mean that the combined signal is limited to that product.

Requiring the multiplier to multiply the user and sensing signals together does not fail to give effect to the amendments made to the claims during prosecution. The claim language at issue was changed from "a multiplier configured to selectively generate a combined signal based on a mathematical product of the user signal and the sensing signal" to "a multiplier configured to selectively generate a combined signal based on both the user signal and the sensing signal." Rather than changing the nature of the multiplier, from something that necessarily multiplies its inputs to something that multiplies some indeterminant values, this amendment more likely addresses a fundamental ambiguity in the original claim language. Namely, does the combined signal yielded by the multiplier of the original claim language simply include the mathematical product of the user and sensing signals or does it necessarily include that product multiplied by some unspecified input or value? This ambiguity is resolved by the claim amendment: the multiplier generates a product of the input user and sensing signals. Simply, the claim amendment does not rise to a special definition of "multiplier" that strays both from the customary meaning of "multiplier" and the other use of "multiplier" in the Patent.

Nor does requiring a multiplier to multiply its inputs render Claim 3 indefinite. Claim 3 is directed to the multiplier's capability to generate "an output signal corresponding to the brightness control signal." This is not directed to the multiplier's capability to generate "a combined signal based on both the user signal and the sensing signal." Specifically, Claim 3 does not equate "a sum of the user signal and the sensing signal" with the combined signal. Rather, that the claim refers to "***a*** sum" instead of "***the*** combined signal" indicates a difference between these two combinations of signals. As set forth below, the multiplier is not limited to only generating the product of the user and sensing signals. However, Claim 3 does not mandate that the multiplier may combine its inputs simply by summing them.

That a multiplier necessarily multiplies, or that multiplying necessarily yields a product, does not mean that the combined signal generated by the multiplier or multiplying is limited to a product of the values multiplied. Similarly, the "multiplier" of the Patent is defined by what it must do (multiply its inputs together), not by what is must not do. That is, the combined signal may include information other than the product and the multiplier may be able to generate values other than the product of the user and sensing signals. The Patent is replete with examples of such.

One example of a multiplier that does more than multiply is depicted in Figure 4 of the Patent. The Figure 4 embodiment of "a multiplier circuit to combine a light sensor output with a user adjustable PWM logic signal" includes the product, but it also includes scaling factors and a dark level bias. The brightness control signal generated by this exemplary multiplier (when selected) is:

$$BCS1 = dutycycle \times \left[\left(\frac{VCC \times R2 \times R4}{[(R1 + R2) \times (R3 + R4)] + (R1 \times R2)}\right) + \left(\frac{ISRC \times R1 \times R2 \times R4}{[(R1 + R2) \times (R3 + R4)] + (R1 \times R2}\right)\right].$$

In this equation, "dutycycle" is the user input, "ISRC" is the output of the light sensor, and R1 through R4 are the values of resistors in a resistor network. The first term in the major brackets, the "VCC" term, "corresponds to a scaled dark bias level of the brightness control signal in total ambient darkness." The second term, the "ISRC" term, "introduces the effect of the visible light sensor." One circuit, the "multiplier circuit," multiplies the user input and the light-sensor signal and also generates a dark level bias to offset the effect of the visible light sensor in total darkness. "The network of resistors … helps to provide the dark bias level and to scale the product of the sensor current signal and the user adjustable PWM logic signal." '117 Patent col.5 l.22 – col.8 l.9.

Another example of a multiplier that does more than multiply is depicted in Figure 8 of the Patent. The Figure 8 embodiment of "a multiplier circuit to combine a light sensor output with a user adjustable potentiometer (R3)" includes scaled and summed values in addition to the product. The brightness control signal generated by this exemplary multiplier (when selected) is:

$$BCS3 = \left[VCC \times \frac{R3}{(R1 + R3)}\right] + \left[ISRC \times \frac{(R1 \times R3)}{(R1 + R3)}\right].$$

In this equation, "R3" is the user input (a potentiometer setting), "ISRC" is the output of the light sensor, and R1 and R2 are the values of resistors in a resistor network. The first bracketed term, the "VCC" term, "corresponds to the brightness control signal in total ambient darkness." The second bracketed term, the "ISRC" term, "introduces the effect of the visible light sensor." One circuit, the "multiplier circuit," multiplies the user input and the light-sensor signal and generates a dark level bias to offset the effect of the visible light sensor in total darkness. *Id*. at col.9 l.39 – col.10 l.32.

An example of a multiplier circuit that does more than multiply the user signal with the sense signal is depicted in Figure 9. The Figure 9 embodiment of a "a multiplier circuit to combine a light sensor output with a user adjustable digital word" includes scaled and summed values in addition to the product. The brightness control signal generated by this exemplary multiplier is:

$$BCS5 = \text{binary \% fullscale} \times \left[\left(\frac{[VCC \times (R2 \times R3)] + [ISRC \times R1 \times R2 \times R3]}{(R1 \times R2) + (R1 \times R3) + (R2 \times R3)}\right)\right].$$

In this equation, "binary % fullscale" is the user input (the digital word), "ISRC" is the output of the light sensor, and R1 through R3 are the values of resistors in a resistor network. As with the

embodiments of Figure 4 and Figure 8, the output of the multiplier includes, in addition to the product of the user and sense signals, a "VCC" term to provide an offset to the sense-signal term to provide a signal in total darkness. *Id*. at col.10 l.33 – col.11 l.27.

There is no support in these embodiments for the temporal order of operations proposed by Defendants. Specifically, reading the claims to first generate a combined signal and then separately and subsequently adjust that combined signal by a dark level bias would exclude the Figure 4, Figure 8, and Figure 9 embodiments from the claims. It would also exclude the Figure 10 embodiment, as that embodiment operates substantially the same as the Figure 4 embodiment. *Id*. at col.11 ll.39–48. This is in addition to excluding the Figure 1 embodiment, as expressly advocated by Defendants. To be clear, Defendants are advocating, implicitly or explicitly, to construe the claims to exclude every exemplary embodiment of a "multiplier circuit" except that depicted as a functional block in the block diagram of Figure 2. The Court declines to do so.

In addition to excluding most of the exemplary embodiments, Defendants seek a construction that calls into question the validity of several claims that depend from Claim 1. For example, Defendants expressly argue that their construction of Claim 1 renders Claim 3 invalid as indefinite. Implicit in Defendants construction is that Claims 10 through 12 may also be invalid as indefinite. These claims, reproduced here and annotated by the Court, call for the multiplier to "generate the brightness control signal." Claim 1 calls for the multiplier to "generate a combined signal."

> **10.** The brightness control circuit of claim 1, wherein ***the multiplier is implemented*** with a pair of current-steering diodes having commonly connected anodes coupled to the sensing signal and respective cathodes coupled to the user signal and a network of resistors ***to generate the brightness control signal***.
>
> **11.** The brightness control circuit of claim 1, wherein the user signal corresponds to a setting of a user adjustable potentiometer, and ***the multiplier is implemented*** with an isolation diode having an anode coupled to the sensing signal and a cathode coupled to the user adjustable potentiometer and a network of resistors ***to generate the brightness control signal***.
>
> **12.** The brightness control circuit of claim 1, wherein the user signal corresponds to a digital word, and ***the multiplier is implemented*** with a digital-to-analog converter configured to receive the digital word and a reference signal determined by the sensing signal ***to generate the brightness control signal***.

Thus, the dependent claims expressly state that the purpose of the multiplier is not only to "generate a combined signal" but also to "generate the brightness control signal." Yet Claim 1 also requires "a dark level bias configured to adjust the combined signal to generate a brightness control signal." Defendants' construction, and its argument, are premised on the dark-level-bias adjustment to generate the brightness control signal being separate from and subsequent to the operation of the multiplier. Claims 10 through 12 require that the same multiplier that generates the combined signal also generates the brightness control signal. Defendants' construction and the express language of the claims are thus in conflict. The express language of the claims governs.

Ultimately, Defendants suggest construing the claims in a way that threatens to exclude almost all the exemplary embodiments and calls into question the validity of several dependent claims. To the extent Defendants' extrinsic evidence suggests doing so, it contradicts the plain meaning of the claims mandated by the intrinsic evidence and should therefore be discounted. *See Phillips v. AWH Corp.*, 415 F.3d 1303, 1318, 1322–23 (Fed. Cir. 2005) (en banc) (holding that a court should "discount" or not "rely on" extrinsic evidence that is "at odds" or "contradicts" the claim constructions ascertained by the intrinsic evidence).

Finally, "selectively" and "wherein the sense signal indicates an ambient light level" must be given weight in the Court's construction. Defendants' constructions do not do so.[7] Plaintiff's proposed rewrite of "selectively" as "on a selective basis" offers no clarity to an otherwise plain term. These terms will be accorded their plain and ordinary meaning without the need for further construction.

Accordingly, the Court construes the "multiplier" and "multiplying" terms as follows:

[7] However, at the hearing, Defendants indicated they did not oppose including "selectively" in the construction. (*See* ECF No. 135, Hr'g Tr. at 16:17–23.)

- "a multiplier configured to selectively generate a combined signal based on both the user signal and the sensing signal" means "a multiplier configured to selectively generate a combined signal based on both the user signal and the sensing signal, wherein the combined signal includes, but is not necessarily limited to, the product of the user signal and the sensing signal"; and
- "selectively multiplying the input signal with a sense signal to generate a combined signal, wherein the sense signal indicates an ambient light level" means "selectively multiplying the input signal with a sense signal to generate a combined signal, wherein the sense signal indicates an ambient light level and wherein the combined signal includes, but is not necessarily limited to, the product of the input signal and the sense signal."

B. The "dark level bias" terms.

Disputed Term	Plaintiff's Proposed Construction	Defendants' Proposed Construction
"a dark level bias configured to adjust the combined signal" • '117 Patent Claim 1	a dark level bias (i.e., a value) configured to adjust (i.e., change) the combined signal	a predetermined value that is added to the combined signal
"adjusting the combined signal with a dark level bias" • '117 Patent Claim 15	adjusting (i.e., changing) the combined signal with a dark level bias (i.e., a value)	adding a predetermined value to the combined signal

Because the parties' arguments and proposed constructions with respect to these terms are related, the Court addresses the terms together.

<u>The Parties' Positions</u>

Plaintiff submits: As expressed in the claims, the "dark level bias" is used to "adjust" the combined signal to generate a brightness control signal and maintain the brightness control signal

above a predetermined level. While the claims expressly require that the "brightness control signal" is "maintained above a predetermined level," there is no requirement that the "dark level bias" itself be predetermined. Rather, the claims expressly allow that the "dark level bias" may not be predetermined. Specifically, dependent Claims 2 and 17 expressly allow that the adjustment provided by the "dark level bias" depends on the "user selectable brightness setting" (Claim 2) or the "the input signal" (Claim 17). The adjustment is not necessarily a simple addition to the combined signal. Rather, the claims allow other adjustments. Specifically, Claim 3 requires that the sum of the user signal and sensing signal (the combined signal) is multiplied by the "dark level bias." ECF No. 113 at 27–33.

In addition to the claims themselves, Plaintiff cites the following intrinsic and extrinsic evidence to support its position: **Intrinsic evidence**: '117 Patent col.5 ll.20–27, col.12 ll.15–18. **Extrinsic evidence**: *American Heritage Dictionary* (3d ed. 1996), "adjust" (Plaintiff's Ex. B, ECF No. 113-3); *Random House Webster's College Dictionary* (2001), "adjust" (Plaintiff's Ex. C, ECF No. 113-4).

Defendants respond: "Dark level bias" is used in the '117 Patent to denote a predetermined value that is added to the combined signal to maintain the brightness control above a predetermined level. In the description of the invention, the "dark level bias" is uniformly presented as an offset that is added to another signal—the Patent "does not contemplate the dark level bias being involved in any mathematical operation other than addition to another signal." The Patent's usage of "dark level bias" comports with customary meaning of "bias" in the art, which is a constant deviation from a reference value. Neither Claim 2 nor Claim 17 mandates departure from this meaning of bias. Rather, these claims denote an adjustment that varies depending on the user selectable

brightness setting while holding the "dark level bias" constant at a predetermined level. ECF No. 121 at 20–30.

In addition to the claims themselves, Defendants cite the following intrinsic and extrinsic evidence to support their position: **Intrinsic evidence**: '117 Patent figs.1– 4, 8–10, col.2 ll.57–61, col.3 ll.21–23, col.5 ll.15–24, col.7 ll.17–32, col.8 ll.2–5, col.8 ll.51–55, col.10 ll.8–16, col.11 ll.6–15. **Extrinsic evidence**: Harry Newton, *Newton's Telecom Dictionary*, "bias" (2002) (Defendants' Ex. I, ECF No. 121-10); Paul Horowitz and Winfield Hill, *The Art of Electronics* 70 (2d ed. 1989) (Defendants' Ex. J, ECF No. 121-11 at 19); Hobbs Decl. at ¶¶ 40, 42, 43, 45, 47–49 (Defendants' Ex. A, ECF No. 121-2 at 18–21).

Plaintiff replies: The meaning of "dark level bias" is apparent from the surrounding claim language. Specifically, it is a value (as the parties agree) used to adjust the combined signal in order to generate a brightness control signal that is maintained above a predetermined level. Defendants' extrinsic evidence is either inapposite or supports Plaintiff's constructions. The extrinsic evidence improperly fails to account for the full disclosure of the Patent, which is not limited to hardware embodiments. With respect to whether a "bias" is predetermined, Defendants' *Newton's Telecom Dictionary* supports that a bias may vary in that it defines bias based on an average of a set of values, which may vary. ECF No. 123 at 9–13.

Plaintiff cites further intrinsic and extrinsic evidence to support its position: **Intrinsic evidence**: '117 Patent col.2 ll.7–16, col.5 ll.37–38; Petition, *Samsung Elecs. Co. Ltd. v. PolarisLED Techs., LLC*, IPR2018-01262, paper 4 (PTAB June 15, 2018) (Plaintiff's Ex. 1, ECF No. 123-2). **Extrinsic evidence**: Harry Newton, *Newton's Telecom Dictionary*, "bias" (2002) (Defendants' Ex. I, ECF No. 121-10).

Analysis

There are two fundamental issues in dispute: First, whether the "dark level bias" is necessarily predetermined. It is not. Second, whether "adjust"/"adjusting" necessarily means adding. It does not.

The "dark level bias" is not necessarily predetermined. The Court agrees with Plaintiff that "bias," as it is customarily used, is not necessarily predetermined, or constant. One dictionary of record provides that "bias" is a "systemic deviation of a value from a reference value" or "[t]he amount by which the average of a set of values departs from a reference value." Harry Newton, *Newton's Telecom Dictionary* 95 (2002), ECF No. 121-10 at 4. Defendants inexplicably equate "systemic" from this definition with "constant." The Court does not understand it this way. Rather, a systemic deviation is one defined by the system, as opposed to being random. The *Newton's* definitions allow that a bias may vary with the values or system state defining the bias.

Some claims may require the bias to be variable or determinable but not necessarily predetermined. For example, Claim 1 requires the "dark level bias" is "configured to adjust the combined signal to generate a brightness control signal" in a way that maintains the brightness control signal "above a predetermined level." Claim 2, which depends from Claim 1, requires the dark-level-bias adjustment "is dependent on the user selectable brightness setting." The Patent is clear that the user brightness setting may vary. *See, e.g.*, '117 Patent col.3 ll.21–22. Thus, a predetermined level is a function of a value that expressly may vary and the dark level bias. This suggests that, in order to maintain the brightness control signal above a predetermined level, the bias may vary if the user setting varies.

"Adjust" (Claim 1) and "adjusting" (Claim 15) with the dark level bias is not limited to adding the dark level bias to the combined signal. Claim 3 uses the product of the dark level bias and the

sum of the user and sensing signals to generate the brightness control signal. This is different than just adding the dark level bias to the combined signal. Claim 4, in contrast, expressly requires the "dark level bias is added to the combined signal." If "adjust" meant "add," there would be no need to specify "added" in Claim 4. Indeed, Claim 4 may be entirely superfluous under Defendants' claim construction. Similarly, Claim 18, which depends from Claim 15, requires "the dark level bias is added to the combined signal." Again, if "adjusting" meant "adding," there would be no need to separately specify that the dark level bias is "added." Finally, as described above in the section on "multiplier," the dark level bias adjustments of the exemplary embodiments (other than Figure 2) are more complex than a simple addition. Indeed, even the Figure 2 embodiment includes scaling factors in the adjustment using the dark level bias to generate the brightness control signal. *Id*. at col.5 ll.22–27. "Adjust" and "adjusting," specifically with respect to using the dark level bias to generate the brightness control signal from the combined signal, are broader than "add" and "adding."

The Court declines to insert Plaintiff's proposed "value" and "change"/"changing" language into the construction. The parties do not dispute that the dark level bias is a value. Indeed, it is clear from the context of the surrounding claim language that the dark level bias is a value. There is no need to clarify this in a claim construction. There is also no need to change "adjust" to "change" and "adjusting" to "changing." "Change" is no more accessible or clear than "adjust" and this "clarification" may inject unnecessary confusion as "adjust" connotes a purposeful change whereas "change" may be entirely random.

Accordingly, the Court rejects Defendants' proposed "added"/"adding" and "predetermined" limitations and holds that the "dark level bias" terms have their plain and ordinary meaning without the need for further construction.

C. "an overdrive clamp circuit coupled to the brightness control signal to limit its amplitude to a predefined range"

Disputed Term	Plaintiff's Proposed Construction	Defendants' Proposed Construction
"an overdrive clamp circuit coupled to the brightness control signal to limit its amplitude to a predefined range" • '117 Patent Claim 6	an overdrive clamp circuit coupled to the brightness control signal to limit its amplitude within predefined minimum and maximum levels	an overdrive clamp circuit coupled to the brightness control signal to limit the brightness control signal to be less than a predetermined level

<u>The Parties' Positions</u>

Plaintiff submits: Under its plain meaning, a "predefined range" has both a predefined minimum and a predefined maximum. As described in the '117 Patent, the "overdrive clamp circuit" limits the "range" of the amplitude of the brightness control signal. While the Patent also describes that the overdrive clamp circuit limits the brightness control signal's amplitude to less than a predetermined level, this is consistent with the claim language and other descriptions of the circuit limiting the amplitude to a range. Limiting an amplitude to a range necessarily limits the amplitude to less than a level (the upper end of the range). ECF No. 113 at 33–35.

In addition to the claims themselves, Plaintiff cites the following **intrinsic evidence** to support its position:'117 Patent col.2 ll.61–64, col.4 ll.48–61, col.5 ll.24–29.

Defendants respond: The "overdrive clamp circuit" is described as limiting the brightness control signal to less than a predetermined level, not as also limiting the signal to greater than some predetermined level. This comports with the customary usage of a "clamp circuit" in the art, which refers to a circuit that keeps a signal from exceeding a maximum level. The term "range" does not necessarily entail both a maximum and a minimum—its plain meaning encompasses a "level to which something is limited," which includes a range with only an upper level. ECF No. 121 at 30–34.

In addition to the claims themselves, Defendants cite the following intrinsic and extrinsic evidence to support their position: **Intrinsic evidence**: '117 Patent col.2 ll.59–64, col.4 ll.59–61, col.5 ll.27–29; U.S. Patent Application No. 60/543,094 (February 9, 2004) (Defendants' Ex. B, ECF No. 121-3). **Extrinsic evidence**: *IEEE 100: The Authoritative Dictionary of IEEE Standards Terms* (7th ed. 2000), "clamp" (Defendants' Ex. D, ECF No. 121-5); Stan Gibilisco, *The Illustrated Dictionary of Electronics* (8th ed. 2001), "clamping circuit" (Defendants' Ex. E, ECF No. 121-6); Paul Horowitz and Winfield Hill, *The Art of Electronics* 221 (2d ed. 1989) (Defendants' Ex. J, ECF No. 121-11 at 22); Ralph J. Smith, *Electronics: Circuits and Devices* 84 (2d ed. 1980) (Defendants' Ex. K, ECF No. 121-12 at 5); Cambridge Dictionary Online, "range"[8] (Defendants' Ex. L, ECF No. 121-3); Hobbs Decl. at ¶¶ 51, 56, 58 (Defendants' Ex. A, ECF No. 121-2 at 21–24).

Plaintiff replies: There is no support for redefining a "range" as solely an upper limit. ECF No. 123 at 13.

Analysis

The issue in dispute is whether the "range" of the claim language includes both an upper and lower limit. It does in that the clamp limits the absolute value of the brightness control signal to the predefined range.

An "overdrive clamp circuit" is described in the '117 Patent as limiting the amplitude of the brightness control signal to "facilitate[] compliance with input ranges for the display driver." '117 Patent col.2 ll.63–64. That is, the clamp prevents the amplitude of the brightness control signal from straying outside the range of acceptable values for the display driver—it prevents the brightness control signal from overdriving the display. This is depicted, for example, in Figure 3.

[8] https://dictionary.cambridge.org/us/dictionary/english/range

The "Brightness Control Voltage" climbs to a peak value of "100%," the "saturation" level, and not beyond. To the extent Plaintiff suggests the overdrive clamp circuit necessarily provides some minimum amplitude, in a manner akin to the dark level bias, the Court disagrees. The clamp is to prevent overdrive.

The clamp does not necessarily limit the "brightness control signal to less than a predetermined level." As the Court understands Defendants' proposal, this would limit the brightness control signal to positive DC values and the clamp to an upper positive limit. However, the Patent does not so limit either the brightness control signal or the clamp. Under its customary meaning, a clamp circuit may "limit the peak voltage or current." *IEEE 100: The Authoritative Dictionary of IEEE Standards Terms* 171–72 (7th ed. 2000), ECF No. 121-5 at 13–14. A clamp may be used to limit both positive and negative extremes, or peaks, of a signal. Ralph J. Smith, *Electronics: Circuits and Devices* 84 (2d ed. 1980), ECF No. 121-12 at 5. This suggests that an "overdrive clamp circuit" may be used to limit either positive or negative extremes. However, the Court notes that the issue of whether the signal may be positive or negative is not before the Court and is not affirmatively addressed by the '117 Patent. Thus, the Court takes no position on this issue. Even if the brightness control signal in all the exemplary embodiments of the '117 Patent is greater than or equal to zero, there is no suggestion that only positive signals may be used to drive a display, or that the clamp necessarily provides only a positive upper limit. The clamp prevents the absolute value of the amplitude of the signal from exceeding some value, whether that amplitude is positive or negative.

Accordingly, the Court construes this term as follows:

- "an overdrive clamp circuit coupled to the brightness control signal to limit its amplitude to a predefined range" means "an overdrive clamp circuit coupled to

the brightness control signal to limit the absolute value of the brightness control signal's amplitude to be less than a predefined level."

V. CONCLUSION

The Court adopts the constructions set forth above, as summarized in the following table. The parties are **ORDERED** that they may not refer, directly or indirectly, to each other's claim-construction positions in the presence of the jury. Likewise, the parties are **ORDERED** to refrain from mentioning any portion of this opinion, other than the actual definitions adopted by the Court, in the presence of the jury. Any reference to claim-construction proceedings is limited to informing the jury of the definitions adopted by the Court.

Within thirty (30) days of the issuance of this Memorandum Opinion and Order, the parties are hereby **ORDERED**, in good faith, to mediate this case with the designated mediator in this case. As a part of such mediation, each party shall appear by counsel (with lead and local counsel present and participating) and by at least one corporate officer possessing sufficient authority and control to unilaterally make binding decisions for the corporation adequate to address any good faith offer or counteroffer of settlement that might arise during such mediation. Failure to do so shall be deemed by the Court as a failure to mediate in good faith and may subject that party to such sanctions as the Court deems appropriate.

Term	Construction
a multiplier configured to selectively generate a combined signal based on both the user signal and the sensing signal	a multiplier configured to selectively generate a combined signal based on both the user signal and the sensing signal, wherein the combined signal includes, but is not necessarily limited to, the product of the user signal and the sensing signal

Term	Construction
selectively multiplying the input signal with a sense signal to generate a combined signal, wherein the sense signal indicates an ambient light level	selectively multiplying the input signal with a sense signal to generate a combined signal, wherein the sense signal indicates an ambient light level and wherein the combined signal includes, but is not necessarily limited to, the product of the input signal and the sense signal
a dark level bias configured to adjust the combined signal	plain and ordinary meaning
adjusting the combined signal with a dark level bias	plain and ordinary meaning
an overdrive clamp circuit coupled to the brightness control signal to limit its amplitude to a predefined range	an overdrive clamp circuit coupled to the brightness control signal to limit the absolute value of the brightness control signal's amplitude to be less than a predefined level

So ORDERED and SIGNED this 7th day of January, 2019.

RODNEY GILSTRAP
UNITED STATES DISTRICT JUDGE