UNITED STATES PATENT AND TRADEMARK OFFICE

BEFORE THE PATENT TRIAL AND APPEAL BOARD

VIZIO, Inc.,
Petitioner,

v.

Polaris PowerLED Technologies, LLC,
Patent Owner.

IPR2020-00043
Patent 8,223,117 B2

Before PHILLIP J. KAUFFMAN, KALYAN K. DESHPANDE, and KARA L. SZPONDOWSKI, *Administrative Patent Judges.*

SZPONDOWSKI, *Administrative Patent Judge*.

DECISION
Denying Petitioner's Request for Rehearing
and Denying Institution of *Inter Partes* Review
35 U.S.C. § 314; 37 C.F.R. § 42.71(d)

I. INTRODUCTION

VIZIO, Inc. ("Petitioner") filed a Petition (Paper 2, "Pet.") requesting institution of *inter partes* review of claims 1, 2, 4–7, 9, 13–16, and 18 of U.S. Patent 8,223,117 B2 (Ex. 1001, "the '117 patent") on ten asserted grounds:

Ground	Claims Challenged	35 U.S.C. §	Reference(s)
1	1, 2, 4–7, 9, 15, 16, 18	102	Oki[1]
2	1, 2, 4–7, 9, 15, 16, 18	103	Oki
3	13	103	Oki, Morris
4	14	103	Oki, Morris, Weindorf[2]
5	1, 2, 4, 5, 9, 15, 16, 18	102	Toffolo[3]
6	1, 2, 4, 5, 9, 15, 16, 18	103	Toffolo
7	6	103	Toffolo, Bruning[4]
8	13	103	Toffolo and Morris[5]
9	14	103	Toffolo, Morris, Weindorf
10	7	103	Toffolo, Weindorf

Pet. 5–6.

Petitioner supported its challenges with the Declaration of Dr. Richard T. Mihran, Ph.D. (Ex. 1010).

Polaris PowerLED Technologies, LLC ("Patent Owner") filed a Preliminary Response (Paper 11, "Prelim. Resp.") to the Petition.

With our authorization (Paper 12), Petitioner filed a Reply to Patent

[1] Japanese App. Pub. No. 2003-150291, published May 23, 2003 (English translation provided as Ex. 1004).
[2] U.S. 2002/0118182 A1, published August 29, 2002 (Ex. 1008).
[3] U.S. 6,337,675 B1, issued January 8, 2002 (Ex. 1006).
[4] U.S. 2002/0070914 A1, published June 13, 2002 (Ex. 1009).
[5] U.S. 2003/0112353 A1, published June 19, 2003 (Ex. 1007).

Owner's Preliminary Response (Paper 17, "Reply"), and Patent Owner filed a Sur-Reply (Paper 23, "Sur-Reply").

In the Decision on Institution (Paper 30, "Decision" or "Inst. Dec."), we exercised our discretion under 35 U.S.C. § 314(a) to deny institution of *inter partes* review based upon related district court proceedings between the parties in the Central District of California[6] ("the California District Court proceeding"). Inst. Dec. 6–12.

Petitioner timely filed a Request for Rehearing (Paper 31, "Reh'ing Req." or "Request") seeking rehearing of our Decision.

We have considered Petitioner's Request for Rehearing and, for the reasons set forth below, we grant Petitioner's Request for Rehearing, but we are not persuaded to change our ultimate conclusion to deny institution of *inter partes* review.

II. STANDARD OF REVIEW

A party requesting rehearing bears the burden of showing the decision should be modified. 37 C.F.R. § 42.71(d). A request for rehearing "must specifically identify all matters the party believes the Board misapprehended or overlooked, and the place where each matter was previously addressed." *Id.* When rehearing a decision on petition, we review the decision for an abuse of discretion. 37 C.F.R. § 42.71(c). An abuse of discretion occurs when a "decision was based on an erroneous conclusion of law or clearly erroneous factual findings, or . . . a clear error of judgment." *PPG Indus.*

[6] *Polaris PowerLED Technologies, LLC v. VIZIO, Inc.*, 8:18-cv-01571 (C.D. Cal.)

Inc. v. Celanese Polymer Specialties Co. Inc., 840 F.2d 1565, 1567 (Fed. Cir. 1988).

III. DISCUSSION OF THE REQUEST FOR REHEARING

On May 4, 2020, we issued our Decision denying institution of *inter partes* review based upon: (1) the advanced stage of the California District Court proceeding; (2) the investment of time and resources by the District Court and the parties in the California District Court proceeding; (3) overlap in the invalidity theories that Petitioner is pursuing here and in the California District Court proceeding; and (4) overlap in the claims challenged in the California District Court proceeding. Inst. Dec. 6–12. In the Decision, we did not reach any of the ten substantive grounds for patentability. *See generally* Inst. Dec. Rather, the denial of institution was solely based on our findings under 35 U.S.C. § 314(a). *Id.*

Petitioner contends that on May 14, 2020, ten days later, the California District Court issued an order striking essentially all of Patent Owner's expert report regarding Petitioner's infringement of the '117 patent. Reh'g Request 1. Subsequently, Patent Owner stipulated to non-infringement of the '117 patent and advised Petitioner it was not going to proceed to trial on the '117 patent. *Id.* at 2, 5. Therefore, Petitioner asserts that the September 2020 trial will not include the '117 patent. *Id.*

Petitioner argues that rehearing is warranted because the upcoming trial in the California District Court proceeding was the sole reason the Board denied the Petition, and the Board has inherent authority to reconsider its denial. *Id.* at 2, 4–5. Petitioner argues this is especially so because the relevant facts the Board relied upon in its Decision "radically changed" just

days after the denial of institution. *Id.* at 5. Petitioner also argues that "the Board should give substantive consideration to the grounds of non-patentability presented in the Petition, and should institute trial accordingly." *Id.* at 2.

We need not decide the impact of the change in the status of the parallel California District Court proceeding because, for the reasons discussed below, we determine that Petitioner has not demonstrated a reasonable likelihood it would prevail as to at least one challenged claim. Accordingly, we deny Petitioner's Request for Rehearing.

We have authority to determine whether to institute an *inter partes* review under 35 U.S.C. §314(a) and 37 C.F.R. §42.4. Institution of an *inter partes* review is authorized when "the information presented in the petition . . . and any response . . . shows that there is a reasonable likelihood that the petitioner would prevail with respect to at least 1 of the claims challenged in the petition." 35 U.S.C. § 314(a) (2012); *see also* 37 C.F.R. § 42.4(a) (2019) ("The Board institutes the trial on behalf of the Director.")

For the reasons set forth below, upon considering the arguments and evidence of record, we are not persuaded to change our ultimate conclusion to deny institution of *inter partes* review.[7]

[7] We do not take any position regarding institution of *inter partes* review involving similar circumstances, but where the Petition shows a reasonable likelihood of prevailing on at least one challenged claim.

IV. BACKGROUND

A. The '117 Patent (Ex. 1001)

The '117 patent is titled "Method and Apparatus to Control Display Brightness with Ambient Light Correction" and generally relates to "adjusting the brightness level to compensate for changes in ambient lighting" for "a visual information display system." Ex. 1001, (54), 1:19–22. The '117 patent discloses an embodiment having a fully automated brightness adjustment mode that takes into account both ambient lighting conditions and user preference for brightness, as well as an embodiment allowing the user to switch between an automatic mode and a manual mode, which only takes into account user preference for brightness. *Id.* at 1:60–2:6, 2:17–30, 6:37–41.

In a fully automated mode, the '117 patent describes a user input, such as a dimming control, and a light sensor, which detects the ambient light level and generates a corresponding light sensor output. *Id.* at 4:45–52, 5:3–5, 5:15–20, Figs. 1, 2. In one embodiment, a multiplier outputs a combined signal that is the product of the user input and a scaled light sensor output. *Id.* at 5:20–22, Fig. 2. The product is added to a dark level bias, which is used to maintain the brightness above a predetermined level when the ambient light level decreases to approximately zero, and adjusted to generate a brightness control signal for a display driver. *Id.* at 2:57–60, 4:49–51, 5:22–27, 5:39–41, Fig. 2.

B. Exemplary Claim

Petitioner challenges claims 1, 2, 4–7, 9, 13–16, and 18 of the ’117 patent. Pet. 1. Among the challenged claims, claims 1 and 15 are independent. Independent claim 1 is representative:

> 1. [1preamble] A brightness control circuit with selective ambient light correction comprising:
>
> [1a] a first input configured to receive a user signal indicative of a user selectable brightness setting;
>
> [1b] a light sensor configured to sense ambient light and to output a sensing signal indicative of the ambient light level;
>
> [1c] a multiplier configured to selectively generate a combined signal based on both the user signal and the sensing signal; and
>
> [1d] a dark level bias configured to adjust the combined signal to generate a brightness control signal that is used to control a brightness level of a visible display such that the brightness control signal is maintained above a pre-determined level when the ambient light level decreases to approximately zero.

Ex. 1001, 12:28–43 (annotations added).

V. ANALYSIS

A. Legal Standard for Anticipation

Anticipation “requires that every element and limitation of the claim was previously described in a single prior art reference, either expressly or inherently, so as to place a person of ordinary skill in possession of the invention.” *Sanofi-Synthelabo v. Apotex, Inc.*, 550 F.3d 1075, 1082 (Fed. Cir. 2008) (citing *Schering Corp. v. Geneva Pharms., Inc.*, 339 F.3d 1373, 1379 (Fed. Cir. 2003); *Continental Can Co. v. Monsanto Co.*, 948 F.2d

1264, 1267–69 (Fed. Cir. 1991)). Whether a reference anticipates is assessed from the perspective of an ordinarily skilled artisan. *See Dayco Prods., Inc. v. Total Containment, Inc.*, 329 F.3d 1358, 1368 (Fed. Cir. 2003) ("[T]he dispositive question regarding anticipation [i]s whether one skilled in the art would reasonably understand or infer from the [prior art reference's] teaching that every claim element was disclosed in that single reference." (quoting *In re Baxter Travenol Labs.*, 952 F.2d 388, 390 (Fed. Cir. 1991))). "[U]nless a reference discloses within the four corners of the document not only all of the limitations claimed but also all of the limitations arranged or combined in the same way as recited in the claim, it cannot be said to prove prior invention of the thing claimed and, thus, cannot anticipate under 35 U.S.C. § 102." *Net MoneyIN, Inc. v. VeriSign, Inc.*, 545 F.3d 1359, 1371 (Fed. Cir. 2008).

B. Legal Standard for Obviousness

A patent claim is invalid as obvious if the differences between the claimed subject matter and the prior art are "such that the subject matter as a whole would have been obvious at the time the invention was made to a person having ordinary skill in the art to which said subject matter pertains." *See* 35 U.S.C. § 103(a). "The ultimate determination of obviousness is a question of law, but that determination is based on underlying factual findings." *In re Nuvasive, Inc.*, 842 F.3d 1376, 1381 (Fed. Cir. 2016). The underlying factual findings include: (1) "the scope and content of the prior art"; (2) "differences between the prior art and the claims at issue"; (3) "the level of ordinary skill in the pertinent art"; and (4) the presence of secondary considerations of nonobviousness such "as commercial success, long felt but

unsolved needs, failure of others," and unexpected results. *Id.* (citing, *inter alia*, *Graham v. John Deere Co.*, 383 U.S. 1, 17–18 (1966)).

"To satisfy its burden of proving obviousness, a petitioner cannot employ mere conclusory statements. The petitioner must instead articulate specific reasoning, based on evidence of record, to support the legal conclusion of obviousness." *In re Magnum Oil Tools Int'l, Ltd.*, 829 F.3d 1364, 1380 (Fed. Cir. 2016). Furthermore, in assessing the prior art, the Board must consider whether a person of ordinary skill would have been motivated to combine the prior art to achieve the claimed invention. *Nuvasive*, 842 F.3d at 1381.

C. Level of Ordinary Skill in the Art

Petitioner asserts a person of ordinary skill in the art "would have at least a bachelor's degree in electrical engineering, physics, optics or a related field, and at least three (3) years of further practical or educational experience working with analog circuit design, and optical sensors." Pet. 7 (citing Ex. 1010 ¶¶ 31–36). Patent Owner asserts a person of ordinary skill in the art "would have at least a bachelor's degree in electrical engineering, physics, or computer sciences, and 2–4 years of experience in the field of visual displays and related technologies." Prelim. Resp. 1.

We do not discern an appreciable difference in the parties' respective definitions of the level of ordinary skill in the art. Both parties contend that a person of ordinary skill in the art would have had similar education levels and experience. Further, neither party explains the impact of the level of skill in the art on the obviousness analysis. *See generally Graham v. John Deere Co.*, 383 U.S. 1, 17–18 (1966); *Okajima v. Bourdeau*, 261 F.3d 1350, 1355 (Fed. Cir. 2001) (The "level of skill in the art is a prism or lens through

which a judge, jury, or the Board views the prior art and the claimed invention."); *Ryko Mfg. Co. v. Nu-Star, Inc.*, 950 F.2d 714, 718 (Fed. Cir. 1991) ("The importance of resolving the level of ordinary skill in the art lies in the necessity of maintaining objectivity in the obviousness inquiry."). Thus, on this record, we determine it is unnecessary to resolve any perceived differences in the parties' definitions of the level of ordinary skill in the art, as any distinction does not impact our Decision.

We further note that the prior art itself demonstrates the level of skill in the art at the time of the invention. *See Okajima*, 261 F.3d at 1355 (explaining that specific findings regarding ordinary skill level are not required "where the prior art itself reflects an appropriate level and a need for testimony is not shown") (quoting *Litton Indus. Prods., Inc. v. Solid State Sys. Corp.*, 755 F.2d 158, 163 (Fed. Cir. 1985)).

D. Claim Interpretation

In *inter partes* review proceedings, claim terms are given their ordinary and customary meanings, as would have been understood by a person of ordinary skill in the art at the time of the invention, having taken into consideration the language of the claims, the specification, and the prosecution history of record. *Phillips v. AWH Corp.*, 415 F.3d 1303, 1313 (Fed. Cir. 2005) (en banc); *see also id.*, 1312-16; 83 Fed. Reg. 51, 340-51,359 (Oct. 11, 2018). At this stage in the proceeding, the Board need only construe the claims to the extent necessary to determine whether to institute *inter partes* review. *See Nidec Motor Corp. v. Zhongshan Broad Ocean Motor Co.*, 868 F.3d 1013, 1017 (Fed. Cir. 2017) ("[W]e need only construe terms 'that are in controversy, and only to the extent necessary to resolve the

controversy.'" (quoting *Vivid Techs., Inc. v. Am. Sci. & Eng'g, Inc.*, 200 F.3d 795, 803 (Fed. Cir. 1999))).

Petitioner states that in order to "avoid having a dispute over the proper constructions," Petitioner is either applying constructions adopted by the district court in *Polaris PowerLED Technologies, LLC v. Samsung Electronics America, Inc.*, 2:17-cv-00715 (E.D. Tex.) ("Samsung litigation") or constructions that Patent Owner contends are the plain and ordinary meaning of the terms. Pet. 16. Petitioner states that "the grounds for invalidity presented here would not change if alternative constructions were adopted." *Id.*

In particular, Petitioner presents the following constructions, as adopted by the district court in the Samsung litigation:

Claim term	District Court Construction
Claim 1: a multiplier configured to selectively generate a combined signal based on both the user signal and the sensing signal	a multiplier configured to selectively generate a combined signal based on both the user signal and the sensing signal, wherein the combined signal includes, but is not necessarily limited to, the product of the user signal and the sensing signal
Claim 15: selectively multiplying the input signal with a sense signal to generate a combined signal	selectively multiplying the input signal with a sense signal to generate a combined signal, wherein the sense signal indicates an ambient light level and wherein the combined signal includes, but is not necessarily limited to, the product of the input signal and the sense signal
Claim 6: an overdrive clamp circuit coupled to the brightness control signal to limit its amplitude to a predefined range	an overdrive clamp circuit coupled to the brightness control signal to limit the absolute value of the brightness control signal's amplitude to be less than a predefined level

Ex. 1022, pp. 21, 28–29.

Petitioner states that it agrees with Patent Owner that "selectively" means "on a selective basis," and that "based on" is not "limited to only the direct multiplication of the user signal and the sensing signal," but should "allow other mathematical functions, like those described in the preferred embodiments, that have additional terms." Pet. 17–19; Ex. 1014, p. 12; Ex. 1019, pp. 7–8. Petitioner does not contest Patent Owner's contention that "configured to" in the "multiplier" limitation of claim 1 means "actually programmed with hardware or software to." Pet. 18.

Petitioner also provides the following additional constructions:

Claim term	**District Court Construction (Samsung litigation)**	**Patent Owner**
Claim 1: a dark level bias configured to adjust the combined signal	Plain and ordinary meaning	a dark level bias (*i.e.*, a value) configured to adjust the combined signal
Claim 15: adjusting the combined signal with a dark level bias	Plain and ordinary meaning	adjusting the combined signal with a dark level bias (*i.e.*, a value)

Id. at 19.

Patent Owner does not dispute or disagree with Petitioner's proposed constructions. Rather, Patent Owner merely states that two district courts have construed the '117 patent (*i.e.*, the Samsung litigation and the California District Court proceeding), and provides the constructions for the

multiplying limitations from the Samsung litigation (set forth above), and the following constructions from the California District Court proceeding.[8]

Claim term	**District Court Construction (California District Court proceeding)**
Claim 1: a multiplier configured to selectively generate a combined signal based on both the user signal and the sensing signal	a multiplier actually programmed or implemented with hardware or software to selectively generate a combined signal based on both the user signal and the sensing signal
Claim 1: a dark level bias configured to adjust the combined signal to generate a brightness control signal that is used to control a brightness level of a visible display	a dark level bias actually programmed or implemented with hardware or software to adjust the combined signal to generate a brightness control signal that is used to control a brightness level of a visible display
Claims 1 and 15: a dark level bias	a value that causes a deviation from the combined signal, where the value is a voltage value of an electrical signal or value of a software variable
Claims 1 and 15: approximately zero	zero or a level close enough to zero that a light sensor would measure zero or a corresponding sensing signal would round to zero
Claim 1: a first input configured to receive a user signal indicative of a user selectable brightness setting	first input actually programmed or implemented with hardware or software to receive a user signal indicative of a user selectable brightness setting

[8] The claim construction order in the California District Court proceeding is dated November 26, 2019, after the accorded filing date of the Petition. Ex. 3002.

Prelim. Resp. 2–3; Ex. 3002, pp. 34–35; Ex. 3003, pp. 7–8. Patent Owner proposes that the Board adopt the foregoing constructions. Prelim. Resp. 3. Additionally, Patent Owner proposes that the preamble to claim 1 should be adopted as limiting, as in the California District Court proceeding. *Id.* (citing Ex. 3002, p. 27, n. 10).

A petition for *inter partes* review must "[p]rovide a statement of the precise relief requested for each claim challenged," which "statement must identify . . . [h]ow the challenged claim is to be construed." 37 C.F.R. § 42.104(b)(3). The Trial Practice Guide[9] states that "[i]f a petitioner believes that a claim term requires an express construction, the petitioner must include a statement identifying a proposed construction of the particular term and where the intrinsic and/or extrinsic evidence supports that meaning. On the other hand, a petitioner may include a statement that the claim terms require no express construction." TPG at 44.

The Petition sets forth alternative claim constructions for "a dark level bias configured to adjust the combined signal" and "adjusting the combined signal with a dark level bias," without requesting any construction in particular, providing any explanation of the evidence allegedly supporting the alternative constructions, or even explaining the difference between the two constructions. Although our determination whether to institute does not depend on the construction of these "dark level bias" terms, Petitioner's lack of discussion and explanation around the construction of these terms

[9] Consolidated Trial Practice Guide (Nov. 2019), available at: https://www.uspto.gov/TrialPracticeGuideConsolidated (hereafter "Trial Practice Guide" or "TPG").

contributes to our finding that the Petition lacks the requisite particularity to institute review, as will be explained further below.

Other than as discussed below, we determine that it is unnecessary to expressly construe any claim terms at this time to resolve the disputed issues before us. *See, e.g.*, *Wellman, Inc. v. Eastman Chem. Co.*, 642 F.3d 1355, 1361 (Fed. Cir. 2011) ("[C]laim terms need only be construed 'to the extent necessary to resolve the controversy.'") We address below only those terms that are relevant to our analysis.

E. Ground 1 - Anticipation Based on Oki

Petitioner contends claims 1, 2, 4–7, 9, 15, 16, and 18 are anticipated by Oki. Pet. 28–42. In support, Petitioner cites the Declaration of Richard T. Mihran, Ph.D. Ex. 1010.

1. Oki (Ex. 1004)[10]

Oki was published on May 23, 2003. Ex. 1004, (43). Oki is titled "Mobile terminal screen display control method and device" and generally relates to controlling a display screen of a mobile terminal "so as to adapt to the display characteristics of the terminal, the mental and physical characteristics of the user, and the use environment." *Id.* (54), (57). Different display modes use different settings for "the character size, the illumination, and the speed of display," and in particular, "an illuminance

[10] Patent Owner argues that Oki is not prior art to claims 1, 2, 6, 7, and 13–16 of the '117 patent. Prelim. Resp. 16–41. Patent Owner also presents several arguments under 35 U.S.C. §§ 312 and 315 pertaining to Petitioner's submission and service of Oki and Oki's translation. *Id.* at 3–9, 15–16. Patent Owner also argues institution should be denied under 35 U.S.C. § 325(d). *Id.* at 13–15. Given that we deny institution for the reasons herein, we need not address these additional arguments.

sensor is mounted to the mobile terminal . . . and the screen illuminance is automatically adjusted. *Id.* (57).

In an embodiment, a "display controller" includes a "central processing unit 1," as well as

> a glare adjuster 10 that adjusts the luminance value, a display unit 3 that displays a screen on a liquid-crystal panel . . . , a display control unit 4 that controls the display to the display unit 3, and a photodiode 9 that has the function of sensing and outputting as an electrical signal the brightness surrounding the display unit 3.

Id. ¶ 26.

Figure 5 of Oki, reproduced below, shows the "display controller" embodiment that includes "glare adjuster 10."

[FIG. 5]

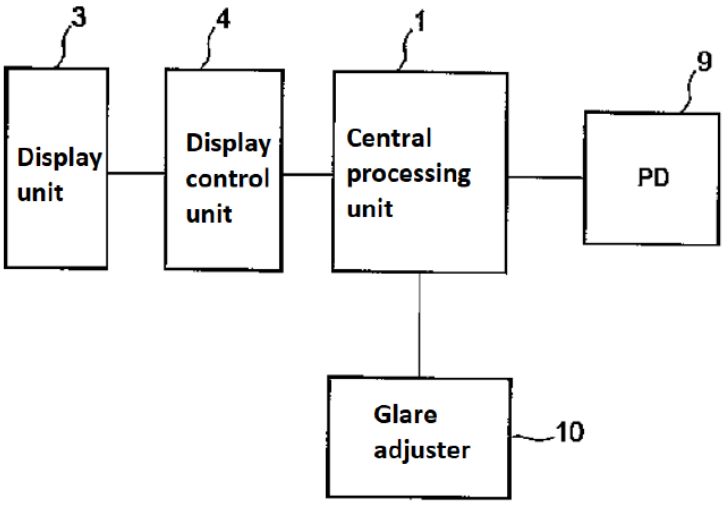

Figure 5 depicts a "display controller" according to an embodiment of Oki, including display unit 3, display control unit 4, central processing unit 1, photodiode 9, and glare adjustor 10.

In operation, a user can input a "maximum used luminance value" and

a "minimum used luminance value" into the "glare adjuster 10 to suit the user's own vision characteristics." *Id.* ¶ 27. The "glare adjuster 10" then calculates a display screen luminance value based on the output value of the "photodiode 9" and the maximum and minimum used luminance values input by the user. *See id.* ¶¶ 28–29. Specifically, "glare adjuster 10" calculates a luminance value "y" according to the equation "y = (b – a) x + a," where "a" is the "minimum used luminance value," "b" is the "maximum used luminance value," and "x" is the photodiode output value. *Id.* ¶ 29. "Display control unit 4" then changes the luminance of "display unit 3" based on luminance value "y." *Id.*

Figure 6 of Oki, reproduced below, shows a graph of the luminance value as a function of the photodiode output value, for given minimum and maximum used luminance values.

[FIG. 6]

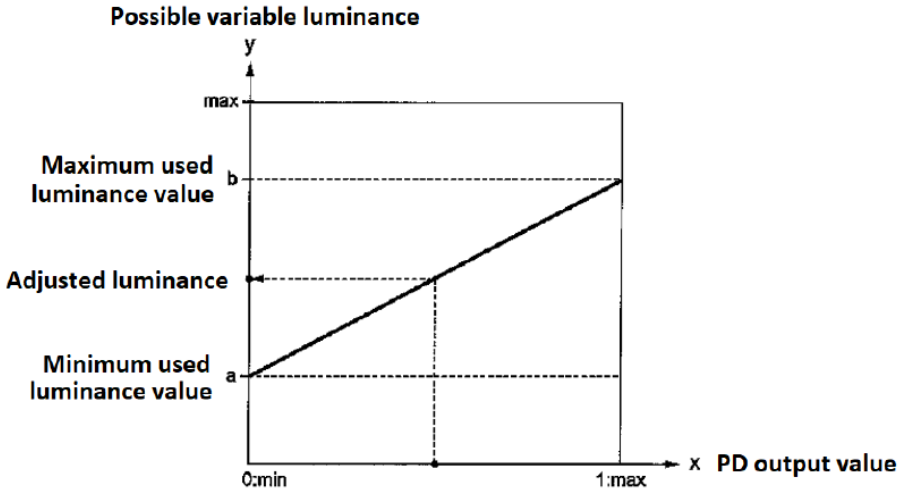

Figure 6 depicts a graph of the luminance value as a function of the photodiode output value.

2. Analysis

Petitioner identifies the disclosures in Oki that Petitioner asserts disclose each limitation of independent claims 1 and 15. *See* Pet. 28–37. For each claim limitation, Petitioner provides a color coded summary table with columns representing the claim limitation/element of the '117 patent and the asserted components in Oki corresponding to each listed claim limitation/element. *Id.* Petitioner's summary table for limitation 1[a] is reproduced below:

Claim Element	Example Elements in *Oki*
1[a] a first input configured to receive a user signal indicative of a user selectable brightness setting;	- First input = numerical keys of the mobile terminal; an input device other than the numerical keys of the mobile terminal Ex. 1004, [0027]
15[a] receiving a user input signal indicative of a user selectable brightness setting;	- user [input] signal indicative of a user selectable brightness setting = maximum used luminance value; minimum used luminance value; luminance setting Ex. 1004, [0027]

Pet. 30. Petitioner also states:

> According to *Oki*, the display controller may receive user input to adjust various brightness settings of the display controller. Ex. 1004, [0027]; *Mihran*, ¶184. The first input includes "the numerical keys of the mobile terminal" or any input device "other than the numerical keys of the mobile terminal" that can be used to input the maximum used luminance value and the minimum used luminance value, one or both of which is the user signal (claim 1), which is referred to as the user input signal in claim 15. *Id.* "This luminance setting [*i.e.,* the user [input] signal] may be made and input to the glare adjuster 10." *Id.* The maximum and/or minimum used luminance values are user inputs indicative of a user selectable brightness setting of the display. *Id.,* Ex. 1004, [0030].

Id.

Petitioner's summary table for limitation 1[d] is reproduced below:

Claim Element	Example Elements in *Oki*
1[d] a dark level bias configured to adjust the combined signal to generate a brightness control signal that is used to control a brightness level of a visible display such that the brightness control signal is maintained above a predetermined level when the ambient light level decreases to approximately zero. 15[d] adjusting the combined signal with a dark level bias to generate a brightness control signal for controlling brightness of a visible display such that the brightness control signal is maintained above a predetermined level when the ambient light level decreases to approximately zero.	- a dark level bias = minimum used luminance value, a - combined signal = $(b-a)x$ - brightness control signal = display screen luminance value, y - such that the brightness control signal is maintained above a predetermined level when the ambient light level decreases to approximately zero = For $y = (b-a)x + a$, when the PD output value, x, is approximately zero, then the minimum used luminance value, a maintains the display screen luminance value, y at least at a level greater than or equal to the minimum used luminance value, a Ex. 1004, [0029]

Pet. 33. Petitioner also states:

> *Oki* discloses these limitations as shown, at least in part, by the equation $y = (b-a) + a$ that defines the brightness control signal, which is illustrated below in FIG. 6 (with added annotations). *Mihran*, ¶¶202-215. The minimum used luminance value, a, adjusts the combined signal (*i.e.*, the product of $(b-a)$ and x), to generate the display screen luminance value, y. Ex. 1004, [0029]; *Mihran*, ¶205. The display control unit 4 changes the brightness of the display unit 3, based on the luminance value y. *Id.* *Oki* discloses that the minimum used luminance value, a, is added to the combined signal, and ensures that the display screen luminance value, y, is not zero, but is maintained at a predetermined value even in low-light conditions. *Oki*, [0029];

> *Mihran*, ¶207. In other words, the minimum used luminance value, *a*, is a "dark level bias." *Mihran*, ¶215.

Pet. 33–34.

Patent Owner argues, among other things, that Petitioner has not sufficiently shown that Oki discloses limitations [1a] and [1d] because: (1) Petitioner improperly alleges that Oki's minimum used luminance value "a" is both a "user [input] signal" and a "dark level bias"; and (2) the maximum and minimum used luminance values are not "user [input] signals." Prelim. Resp. 48–52, 58–61. Specifically, Patent Owner argues that "minimum used luminance value 'a' cannot be *both* the 'dark level bias' and the 'user [input] signal' because they are two different limitations." *Id.* at 58–61. Patent Owner points to certain portions of and Figures in the Specification of the '117 patent, as well as dependent claim 3, to support its arguments that the "dark level bias" and the "user [input] signal" are two different, mutually exclusive elements. *Id.*

On the record before us, we determine that Petitioner has not shown a reasonable likelihood of prevailing in demonstrating that Oki discloses limitations 1[a] and 1[d], and, accordingly, has not shown a reasonable likelihood it will prevail in demonstrating that Oki anticipates claim 1. We agree with Patent Owner that Petitioner improperly relies on Oki's minimum used luminance value "a" as disclosing two separate claim limitations. "Where a claim lists elements separately, 'the clear implication of the claim language' is that those elements are 'distinct component[s]' of the patented invention." *Becton, Dickinson & Co. v. Tyco Healthcare Grp., LP*, 616 F.3d 1249, 1254 (Fed. Cir. 2010) (alteration in original) (quoting *Gaus v. Conair Corp.*, 363 F.3d 1284, 1288 (Fed. Cir. 2004)); *HTC Corp. v. Cellular*

Commc'n. Equip. LLC, 701 F. App'x. 978, 982 (Fed. Cir. 2017) ("The separate naming of two structures in the claim strongly implies that the named entities are not one and the same structure.").

Claims 1 and 15 recite the "user [input] signal" and the "dark level bias" as separate and distinct elements of the claimed "brightness control circuit" and method. Claim 1 recites "a first input configured to *receive a user signal* indicative of a user selectable brightness setting," with "a multiplier configured to selectively *generate a combined signal based on both the user signal and the sensing signal*," and "a *dark level bias configured to adjust the combined signal* to generate a brightness control signal . . ." Ex. 1001, 12:30–43. Claim 15 recites similar limitations in method form. *Id.* at 13:36–14:9. In other words, the dark level bias adjusts a combined signal that is generated based on the user signal and the sensing signal.

The Specification of the '117 patent supports that the "user (input) signal" is a distinct, separately identifiable element from the "dark level bias." For example, as Patent Owner explains, the equations accompanying Figures 4, 8, and 9 of the Specification show these as separate elements. *See* Prelim. Resp. 59–61. Patent Owner provides an annotated version of Figure 4 and its accompanying equation, set forth below:

FIG. 4

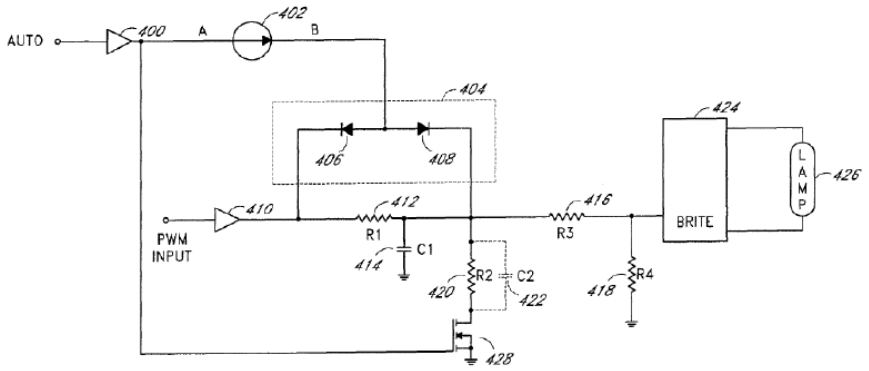

$$BCS1 = \boxed{dutycycle} \times \boxed{\left[\left(\frac{VCC \times R2 \times R4}{[(R1+R2)\times(R3+R4)]+(R1\times R2)}\right)\right]} + \left(\frac{\boxed{ISRC} \times R1 \times R2 \times R4}{[(R1+R2)\times(R3+R4)]+(R1\times R2)}\right)\Bigg]$$

User Signal

Dark Level Bias

Sensing Signal

Id. at 59–60. Figure 4 depicts a schematic diagram of one embodiment of a brightness control circuit with a multiplier circuit to combine a light sensor output with a user adjustable PWN logic signal. Ex. 1001, 4:23–25. Patent Owner's annotated version of the equations of Figure 4 highlight the user signal in red, the dark level bias in green, and the sensing signal in blue. Prelim. Resp. 60. In reference to Figure 4 and its equations, the Specification explains:

> *The term "dutycycle" corresponds to the duty cycle of the user adjustable PWM logic signal.* The term "VCC" corresponds to the logic high output from the input buffer circuit 410. The term "ISRC" corresponds to the sensor current signal. *The first major term within the brackets corresponds to a scaled dark bias level of the brightness control signal in total ambient*

> *darkness.* The second major term within the brackets introduces the effect of the visible light sensor 402. *The network of resistors 412,420 416, 418 helps to provide the dark bias level and to scale the product of the sensor current signal and the user adjustable PWM logic signal.*

Ex. 1001, at 7:24–35 (emphasis added).

Patent Owner provides similar support and annotations for Figures 8 and 9, which likewise support that the "user [input] signal" and "dark level bias" are different. Prelim. Resp. 60–61.

Similarly, Figures 1 and 2 distinguish between the user input (DIMMING CONTROL) and the dark level bias. Figure 2 is depicted below:

FIG. 2

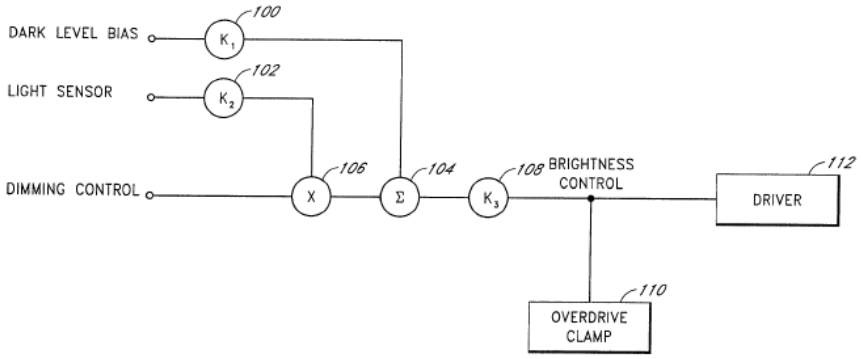

Figure 2 depicts an embodiment of a brightness control circuit with ambient light correction. The Specification explains:

> FIG. 2 is a block diagram of another embodiment of a brightness control circuit with ambient light correction. A light sensor output (LIGHT SENSOR) is adjusted by a scalar circuit (k2) 102 and then provided to a multiplier circuit 106. *A user input (DIMMING CONTROL) is also provided to the multiplier*

> *circuit 106.* The multiplier circuit 106 outputs a signal that is the product of the user input and Scaled light sensor output. *A Summing circuit 104 adds the product to a dark level bias (DARKLEVEL BIAS) that has been adjusted by scalar circuit (k1) 100.* An output of the summing circuit 104 is adjusted by scalar circuit (k3) 108 to generate a bright ness control signal (BRIGHTNESS CONTROL) for a display driver 112.

Ex. 1001, 5:15–27 (emphasis added). The Specification goes on to state that "In FIG. 2, the scaled dark level bias is added to the output of the multiplier circuit 106 to provide the predefined level of brightness in this case. *This feature may be desired to prevent a user from using the brightness control circuit to turn off a visual information display system.*" Ex. 1001, 5:38–43 (emphasis added).

The Specification does not indicate that the "user [input] signal" and the "dark level bias" may be the same thing. In addition, Petitioner does not offer evidence or argument suggesting that the general presumption that these different terms have different meanings would not apply to the claim terms "user [input] signal" and "dark level bias." Even the proposed constructions Petitioner submits use differing terminology for the "dark level bias" and "user [input] signal." *See* Pet. 17–19.

Dependent claim 3, which recites "wherein the multiplier multiplies a sum of the *user signal* and the sensing signal by the *dark level bias* to generate an output signal corresponding to the brightness control signal," likewise supports that the user signal and dark level bias are different. Ex. 1001, 12:48–51. Further, with reference to Figure 3, which Petitioner relies upon (Pet. 35), the '117 patent states "[t]he brightness control signal near zero lux is a function of a dark bias level and also depends on the user

setting." Ex. 1001, 6:10–12. In other words, dark level bias and user setting (or input) are different.

Thus, we determine that the claim language, figures, and written description of the '117 patent demonstrate that the "user (input) signal" and "dark level bias" are separate components. Petitioner has not provided any explanation or argument as to why these separate claim elements can be satisfied by the same component in Oki. Therefore, Petitioner has not provided sufficient explanation or argument as to its reliance on Oki's minimum variable use luminance "a" as disclosing two separate and distinct claim elements, i.e., the user (input) signal and the dark level bias.

Moreover, in so relying, Petitioner's contentions lack sufficient explanation and consistency in other ways. For example, in connection with limitation [1a], Petitioner asserts that Oki's minimum used luminance value and maximum used luminance values are "user [input] *signals*." Pet. 30. For the "dark level bias," Petitioner presents two alternative claim constructions – one construction that the "dark level bias" has its plain and ordinary meaning, and a second construction that clarifies that the "dark level bias" is "*i.e.*, a value." *See id.* at 19; *see also infra*. Petitioner asserts that its grounds for invalidity would not change under these alternative constructions. *Id.* at 16. However, Petitioner's contentions as to this claim limitation do not mention these alternative constructions. Nor does Petitioner explain how the minimum used luminance value "a" may both be a *signal* ("user [input] signal") and a *value* ("dark level bias"). Petitioner provides no explanation or discussion of *values* vs. *signals*.

We also agree with Patent Owner that another shortcoming of this ground is that Petitioner does not sufficiently explain why Oki's minimum

used luminance value and maximum used luminance value disclose "user [input] *signals*." *See* Prelim. Resp. 51–52. Dr. Mihran's testimony states that "the maximum used luminance value and the minimum used luminance value, one or both of which are the *user signal* of claim 1, and the *user input signal* of claim 15." Ex. 1010 ¶ 184. This testimony is not sufficiently supported on this record. *Telemac Cellular Corp. v. Topp Telecom, Inc.*, 247 F.3d 1316, 1329 (Fed. Cir. 2001) (holding that conclusory statements offered by experts are not evidence). Oki describes that the "maximum used luminance value is a value at which the user does not sense glare," and the "minimum used luminance value is a value at which the user does not sense glare when the mobile terminal is used when it is dark outside." Ex. 1004 ¶ 27. Oki describes that these values are "input" or "selected by the user" and "set in the glare adjustor." Ex. 1004 ¶¶ 26, 27. Nowhere does Oki describe, or does Petitioner provide sufficient explanation, that these values are "signals."

Petitioner thus fails to meet the burden required to support institution of *inter partes* review of independent claims 1 and 15, and, for the same reasons, dependent claims 2, 4–7, 9, 16, and 18 based on anticipation by Oki. *Harmonic Inc. v. Avid Tech., Inc.*, 815 F.3d 1356, 1363 (Fed. Cir. 2016) (quoting 35 U.S.C. § 312(a)(3) (requiring *inter partes* review petitions to identify "with particularity . . . the evidence that supports the grounds for the challenge to each claim") (internal quotations omitted)); *cf. Intelligent Bio-Systems*, 821 F.3d at 1369 (quoting 35 U.S.C. § 312(a)(3)) (addressing "the requirement that the initial petition identify 'with particularity' the 'evidence that supports the grounds for the challenge to each claim'"). Accordingly, Petitioner fails to demonstrate a reasonable likelihood that it

would prevail on this ground of unpatentability.

F. Ground 2 - Obviousness Based on Oki

Petitioner also asserts that claims 1, 2, 4–7, 9, 15, 16, and 18 are unpatentable as obvious under 35 U.S.C. § 103 by Oki. Pet. 5. Petitioner relies on Oki as in the anticipation ground. *Id.* Petitioner asserts that Oki discloses each of the limitations in independent claims 1 and 15. *See id.* at 28 ("the preamble is disclosed by Oki), 30 ("Oki discloses these limitations [in limitation [1a] and [15a]]), 31 ("Oki discloses [limitation [1b] and [15b]]," "Oki discloses these limitations [in limitation [1c] and [15c]]"), 33 ("Oki discloses these limitations as shown [in limitation [1d] and [15d]]"), 37 ("Thus, Oki discloses all of the limitations in claims 1 and 15")). Similarly, Petitioner asserts that Oki discloses each of the limitations in dependent claims 2, 4–7, 9, 16, and 18. *Id.* at 37–42.

Patent Owner asserts that Petitioner provides no substantive analysis of obviousness for Ground 2. Prelim. Resp. 65. Specifically, Patent Owner argues that the Petition contains no analysis of (1) how Oki is modified to meet the claim limitations; (2) why one of ordinary skill in the art would modify Oki to meet the claim limitations; (3) whether there would be a reasonable expectation of success in modifying Oki; and (4) differences between the claims and Oki. *Id.*

We agree with Patent Owner. As an initial matter, this ground suffers from the same shortcomings as Ground 1. In addition, short of generally asserting the grounds, and stating that "claims 1, 2, 4–7, 9, 15, 16, and 18 of the '117 patent is anticipated and/or rendered obvious by the disclosure in Oki," the Petition contains no actual obviousness arguments or analysis for any of claims 1, 2, 4–7, 9, 15, 16, and 18.

The petition must identify with particularity each claim challenged, the grounds on which the challenge to each claim is based, and the evidence that supports the grounds for the challenge to each claim. 35 U.S.C. § 312(a)(3); *see also* 37 C.F.R. § 42.22(a) (content of petitions); 37 C.F.R. 42.104 (content of petition). Petitioner's conclusory statements, without more, are irreparably lacking in detail. Petitioner does not provide any analysis to support the assertion of obviousness over Oki. In fact, Petitioner instead asserts that Oki discloses *all* of the limitations in each of claims 1, 2, 4–7, 9, 15, 16, and 18, so it is unclear what modification, if any, is required to Oki, or even the basis of Petitioner's obviousness grounds. *E.g.*, Pet. 28–33. Petitioner does not clearly point out the differences between the claimed invention and Oki. Nor does Petitioner explain why a person of ordinary skill in the art would have found the claimed subject matter obvious in spite of those differences. Petitioner has not provided sufficient reasoning or facts on which to base a conclusion that a person of ordinary skill in the art would have found it obvious, in light of Oki's disclosure, to modify Oki to meet the claim limitations.

Accordingly, Petitioner fails to demonstrate a reasonable likelihood that it would prevail on this ground of unpatentability.

G. Ground 5 - Anticipation Based on Toffolo

Petitioner contends claims 1, 2, 4, 5, 9, 15, 16, and 18 are anticipated by Toffolo. Pet. 46–59. In support, Petitioner cites the Declaration of Richard T. Mihran, Ph.D. Ex. 1010.

1. Toffolo (Ex. 1006)

Toffolo issued on January 8, 2002. Ex. 1006, (45). Toffolo is titled

"Display System With Automatic and Manual Brightness Control" and generally relates to "[a] display system provid[ing] automatic and manual brightness control." *Id.* (54), (57). Specifically, a "brightness controller" varies the luminance of a display between minimum and maximum luminance values, based on sensed ambient light. *Id.* at 1:21–40.

In an embodiment, "display system 20" includes "automatic input circuit 30" with "first user input device 32," "second user input device 34," and "photo sensor 36 for sensing the level of ambient light, or 'illuminance,' near the display 22." *Id.* at 1:58–2:4.

Figure 1 of Toffolo, reproduced below, shows "display system 20."

FIG. 1

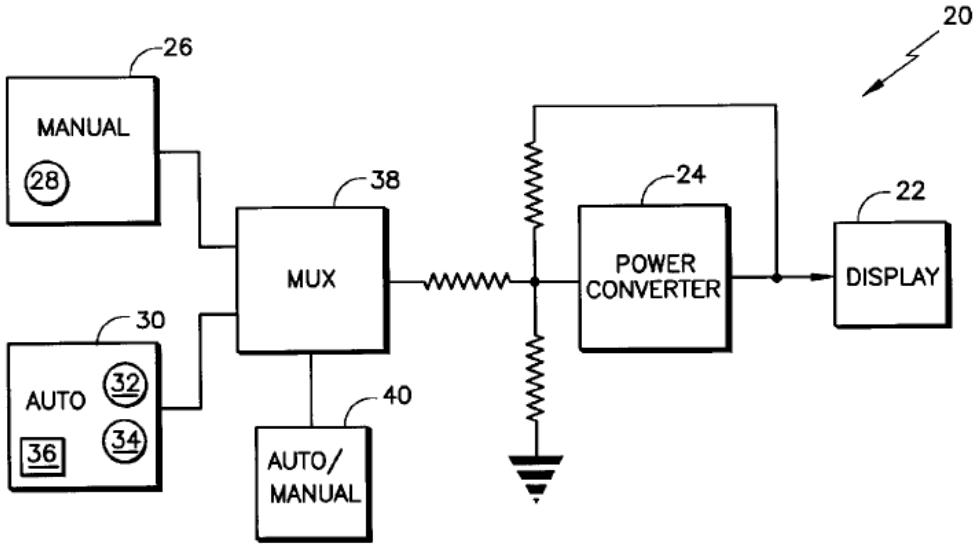

Figure 1 depicts "display system 20" for controlling the brightness of "display 22" in an embodiment of Toffolo, including "first input device 32," "second input device 34," "photosensor 36," and "display 22".

In operation, the "first user input device 32" is used to select a point "A" corresponding to "the illuminance at which display 22 displays its maximum luminance." *Id.* at 2:30–34. The "second user input device 34"

is used to select at point "B" corresponding to "the luminance of the display 22 which is displayed at the minimum illuminance detectable." *Id.* at 2:38–40. Toffolo explains that

> When the photosensor 36 detects that the level of ambient light is below point B, the display 22 is displayed at a minimum luminance level, which is selected by the second user input device 34. When the photosensor 36 detects that the ambient light level is at or above that indicated at point A, as selected by user input device 32, the display 22 is displayed at a maximum luminance level, which is preferably the maximum luminance level that can be displayed by the display 22. When the photosensor 36 detects that ambient light level is between points A and B, the display 22 is displayed as a function of the illuminance between the light levels indicated at points A and B.

Id. at 2:49–61.

Figure 2 of Toffolo, reproduced below, shows how the display luminance of the "display 22" varies based on sensed illuminance for selected values of "A" and "B." *See id.* at 2:14–28.

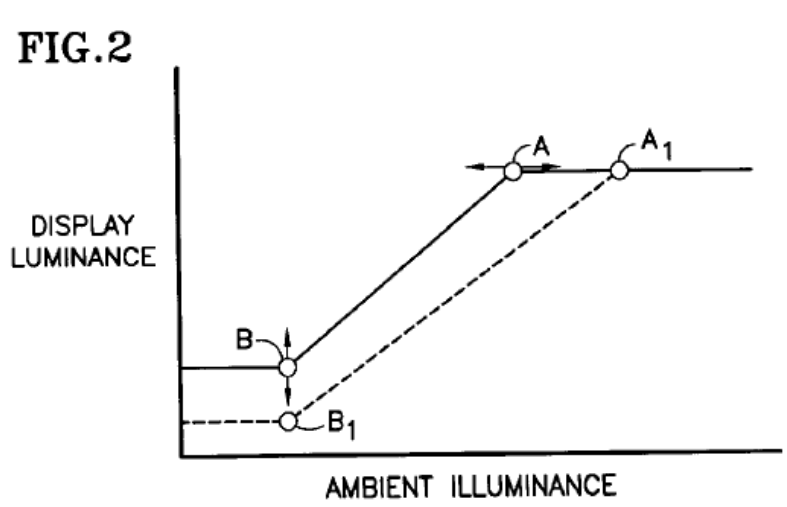

Figure 2 depicts a graph showing the relationship between luminance of "display 22" on the y-axis and illuminance as sensed by "photo sensor 36" on the x-axis.

2. Analysis

Petitioner has identified the disclosures in Toffolo that Petitioner asserts disclose each limitation of independent claims 1 and 15. *See* Pet. 46–55. For each claim limitation, Petitioner provides a color coded summary table with columns representing the claim limitation/element of the '117 patent and the asserted components in Toffolo corresponding to each listed limitation/element. *Id.* Petitioner's summary table for limitation 1[c] is reproduced below:

Claim Element	Example Elements in *Toffolo*
1[c] a multiplier configured to selectively generate a combined signal based on both the user signal and the sensing signal; 15[c] selectively multiplying the input signal with a sense signal to generate a combined signal;	- multiplier = display controller - selectively generate a combined signal based on both the user signal and the sensing signal = a relationship between luminance of the display 22 and the illuminance as sensed by the photosensor 36, while taking into account user input (minimum luminance value B, maximum luminance value A, or both); various combinations of user input multiplied by the sensing signal; see below for more analysis on how the combined signal is disclosed Ex. 1006, 2:14-67; 3:1-34; claims 1-12

Pet. 49. For disclosure of the combined signal, Petitioner relies on analysis from Dr. Mihran. Pet. 49–55; *see* Ex. 1010 ¶¶ 275–300. Dr. Mihran relies

on an annotated Figure 2 of Toffolo, depicted below:

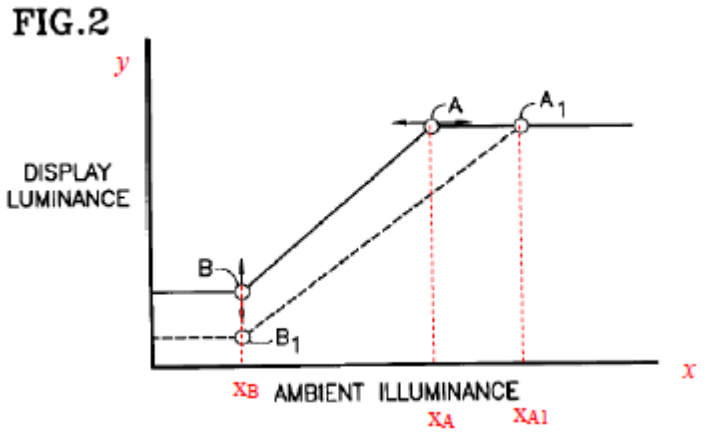

Pet. 52 (citing Ex. 1010 ¶¶ 279–280). Figure 2 of Toffolo depicts a graph showing operation of the display, with Display Luminance on the y-axis and Ambient Illuminance on the x-axis, and points A and B showing maximum and minimum illuminance, respectively. Ex. 1006, 1:50–51, 2:18–24. Figure 2 shows that "the display luminance of the display 22 increases with illuminance between points A and B." *Id.* at 2:16–18. Figure 2 further shows that "when points A and B are selectively varied, for example, to points A_1 and B_1, the function of the display luminance and illuminance between points A_1 and B_1, are altered accordingly, such that the luminance of the display 22 is a continuous function." *Id.* at 2:43–47.

Petitioner annotates Figure 2 to indicate x and y axes and coordinate values corresponding to points A/A_1 and B/B_1, for example, x_B, x_A, and x_{A1}. Pet. 52. According to Petitioner, annotated Figure 2 of Toffolo, depicts ambient illuminance value at x_B is the ambient illuminance where the sensor signal output of the photodetector is effectively zero. *Id.* Petitioner asserts that because the display illuminance between x=0 and x_B is the same, Figure 2 may be redrawn to show the Display Luminance as a function of the

normalized *photosensor signal* that is indicative of Ambient Illuminance, rather than Ambient Illuminance itself. *Id.* at 52–53. In this depiction, Petitioner asserts that the x-value corresponding to point B – x_B – is zero. *Id.* at 53. Petitioner's redrawn and annotated Figure 2 is depicted below:

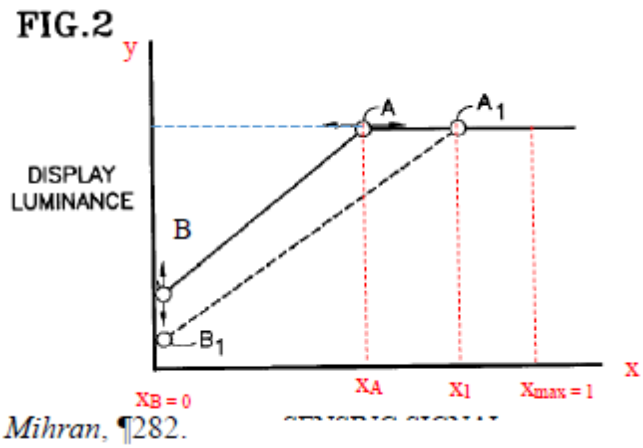

Mihran, ¶282.

Id. Redrawn Figure 2 essentially shifts the graph left toward the y-axis, so that $x_B = 0$. Petitioner asserts:

> A POSA would have further understood that the general equation of the solid line between points A (x_A, *A*) and B (x_B, *B*) depicted in the figure above is:
>
> $y = [(A\text{-}B)/x_A]x + B,$
>
> where *y* = display luminance, *B* = minimum luminance value (indicative of a *first* component of a user selectable brightness setting), the point A (x_A, *A)* = condition for maximum luminance value (indicative of a *second* component of a user selectable brightness setting); x_B=0, and ***x*** = sensing signal (indicative of ambient light level). *Mihran*, ¶284. As can be observed from equation $y = [(A\text{-}B)/x_A]x + B$, the user signal portion $(A - B)/x_A$ is multiplied by ***x***, which is the photosensor signal value. *Mihran*, ¶290. The result of the multiplication of $(A - B)/x_A$ and ***x*** is a combined signal, $[(A - B)/x_A]x$. *Id.*

Id. at 53–54. Petitioner, therefore, contends:

> The control circuit of *Toffolo* performs a **multiplication** operation, $[(AB)/x_A]x$, to generate a combined signal, which equals zero under very low ambient light conditions. *Mihran*, ¶307. The minimum used luminance value defined by *B* serves as the dark level bias and ensures that the display screen luminance value corresponding to *y* is maintained above zero even when the photosensor output value, *x*, is zero. *Mihran*, ¶¶307-313.

Id. at 54–55.

Patent Owner argues that Petitioner's theory is unsupported by Toffolo's disclosure because: (1) Toffolo does not disclose the equation advanced by Petitioner, (2) Toffolo has no disclosure of multiplication as required by the claims, and (3) Petitioner's theory is contrary to Toffolo's disclosure and Figure 2. Prelim. Resp. 72. Specifically, Patent Owner argues that Toffolo does not disclose that its display controller performs any multiplication of signals; rather, it merely varies the display luminance based on the light sensor signal. *Id.* at 72–73. According to Patent Owner, "the decision to use maximum or minimum luminance is based only on the value of the light sensor illuminance signal with no multiplication." *Id.* at 74. Patent Owner also argues that Petitioner does not argue inherency, and Figure 2 could be generated using lookup tables or other equations involving constants. *Id.* at 76. Patent Owner argues that the only software implementation with a microprocessor disclosed by Toffolo is a lookup table, and Figure 2 is described as a graph, which does not have a microprocessor and cannot execute any equations. *Id.*

On the record before us, we determine that Petitioner has not shown a reasonable likelihood of prevailing as to this ground. Toffolo does not disclose using a multiplier to generate a combined signal based on both the

user signal and the sensing signal. Although Toffolo's Figure 2 discloses a graph showing the illumination functionality of its display, neither this graph, nor any associated description thereof, expressly discloses or describes equation $y = [(A-B)/x_A]x + B$ or multiplication of the user signal and the photosensor signal. Rather, Petitioner's contentions are based entirely on Dr. Mihran's interpretation of Figure 2. Pet. 49–55 (citing Ex. 1010 ¶¶ 275–314). Moreover, although Dr. Mihran provides testimony as to how a person of ordinary skill in the art would have understood Figure 2, (*E.g.*, Ex. 1010 ¶¶ 279, 282, 284, 291), the cited testimony does not offer sufficient analysis, elaboration or underlying evidence to support his position that Toffolo discloses multiplying a user signal (or input signal) with a sensing signal to generate a combined signal. Dr. Mihran's testimony based upon disclosure in Toffolo is unpersuasive:

> The display controller of *Toffolo* uses a representation of these equations (based on the actual user input) to control the adjustment of the display luminance value, *i.e.,* the display brightness, as described in the passage below:
>
> > In operation, a user selectively alters points A and B utilizing user input devices **32** and **34**, respectively. When the photosensor **36** detects that the level of ambient light is below point B, the display **22** is displayed at a minimum luminance level, which is selected by the second user input device **34**. When the photosensor **36** detects that the ambient light level is at or above that indicated at point A, as selected by user input device **32**, the display **22** is displayed at a maximum luminance level, which is preferably the maximum luminance level that can be displayed by the display **22**. When the photosensor **36** detects that ambient light level is between points A and B, the display **22** is

> displayed as a function of the illuminance between the light levels indicated at points A and B.

Ex. 1006, 2:48-61.

Mihran ¶ 286. However, there is no indication from the cited passage (or anywhere else in Toffolo) that Dr. Mihran's equation or multiplication is used to control the adjustment of the display luminance, as asserted. To the contrary, the passage indicates, consistent with other disclosure in Toffolo, that the luminance of the display is adjusted based on ambient light sensed by the ambient light sensor, and will fall between minimum luminance level A and maximum luminance level B, which may be selected by a user. *E.g.*, Ex. 1006, Abstr. ("[a] brightness controller varies the luminance of the display based upon ambient light as sensed by an ambient light sensor . . . [and] varies the luminance of the display between the minimum luminance at a minimum illuminance to a maximum luminance at a maximum illuminance"); 1:28–33 ("[t]he display displays the maximum luminance when the ambient light sensor senses ambient light *greater than or equal to* the maximum illuminance. The display displays the minimum luminance when the ambient light sensor senses *less than or equal to* the minimum illuminance.") (emphasis added); 2:33–37("[a]ny illuminance sensed by the photosensor 36 to be at or above the illuminance level at point A would cause the display system 20 to display the display 22 at its maximum luminance"); 2:49–53 ("[w]hen the photosensor 36 detects that the level of ambient light is below point B, the display 22 is displayed at a minimum luminance level, which is selected by the second user input device 34."); *see generally id.* 2:14–61.

In other words, there is no indication that Toffolo generates a

combined signal by multiplying the photosensor signal and a user signal. As there are no express teachings of the "multiplier to selectively generate a combined signal based on both the user signal and the sensing signal" or "selectively multiplying the user input signal with the sense signal to generate a combined signal" limitations of independent claims 1 and 15, Petitioner would have to show that the claimed limitations are inherent in Toffolo. However, neither Petitioner, nor its expert, Dr. Mihran, asserts that the limitations are inherent in Toffolo.

Accordingly, Petitioner fails to demonstrate a reasonable likelihood that it would prevail on this ground of unpatentability.[11]

H. Ground 6 - Obviousness Based on Toffolo

Petitioner also asserts that claims 1, 2, 4, 5, 9, 15, 16, and 18 are unpatentable as obvious under 35 U.S.C. § 103 by Toffolo. Pet. 46.

For each of the limitations in independent claims 1 and 15, Petitioner asserts that Toffolo discloses each of the limitations in independent claims 1 and 15. *See id.* ("the preamble is disclosed by Toffolo), 47 ("Toffolo discloses these limitations [in limitation [1a] and [15a]]"), 48 ("Toffolo discloses [limitation [1b] and [15b]]"), 112 ("Toffolo discloses these limitations [in limitation [1c], [1d], [15c], and [15d]]"). Similarly, Petitioner asserts that Toffolo discloses each of the limitations in dependent claims 2, 4, 5, 9, 16, and 18. *Id.* at 55–59.

---

[11] We also note that, similar to Ground 1, Petitioner relies on Toffolo's "minimum luminance value B" to teach both the "user [input] signal" and the "dark bias level." *See* Pet. 49–50. For the same reasons as discussed above with respect to Ground 1, we find Petitioner has not supported such reliance with sufficient explanation and argument.

Patent Owner asserts that Petitioner provides no substantive analysis of obviousness for Ground 6. Prelim. Resp. 65. Specifically, Patent Owner argues that the Petition contains no analysis of (1) how Toffolo is modified to meet the claim limitations; (2) why one of ordinary skill in the art would modify Toffolo to meet the claim limitations; (3) whether there would be a reasonable expectation of success in modifying Toffolo; and (4) differences between the claims and Toffolo. *Id.*

Our analysis here parallels that of Ground 2 above. Specifically, Petitioner does not correct the deficiencies of the anticipation ground. Nor does Petitioner provide analysis to support the assertion of obviousness over Toffolo. Rather, Petitioner generally asserts the grounds and states that "[t]he alleged invention recited in claims 1–2, 4–5, 9, 15–16, and 18 of the '117 patent is anticipated and/or rendered obvious in view of the disclosure Toffolo," but provides no actual obviousness arguments or analysis for claims 1–2, 4–5, 9, 15, 16, and 18.

Accordingly, Petitioner fails to demonstrate a reasonable likelihood that it would prevail on this ground of unpatentability.

I. Grounds 3, 4, and 7–10

In light of our findings as to independent claims 1 and 15 under Grounds 1, 2, 5, and 6, we, likewise find Petitioner has failed to demonstrate a reasonable likelihood that it would prevail on Grounds 3, 4, and 7–10, which address dependent claims 6, 7, 13, and 14.

VI. CONCLUSION

For the foregoing reasons, we determine Petitioner has not demonstrated a reasonable likelihood that it would prevail in establishing the

unpatentability of claims 1, 2, 4–7, 9, 13–16, and 18 of the ’117 patent based on the grounds asserted in the Petition. We do not institute an *inter partes* review of the challenged claims on the ground set forth in the Petition.

V. ORDER

In consideration of the foregoing, it is hereby:

ORDERED that *inter partes* review is not instituted for any claim of the ’117 patent.

PETITIONER:

Jason Croft
John Gadd
MASCHOFF BRENNAN
jcroft@mabr.com
jgadd@mabr.com

PATENT OWNER:

Russell Tonkovich
FEINBERG DAY KRAMER ALBERTI
LIM TONKOVICH & BELLOLI LLP
rtonkovich@feinday.com

Bridget A. Smith
Lowenstein & Weatherwax LLP
smith@lowensteinweatherwax.com