ISL29102, ISL29020, ISL29015

Light Sensor Applications

AN1422
Rev.0.00
August 28, 2008

As electronics seamlessly weave their way into our lives, sensors play an increasingly important role. Light sensors are very simple and inexpensive, allowing their inclusion in multitudes of consumer products from night lights to cell phones. There are a multitude of ways to sense light. The simplest optical sensor is a photo resistor. Photodiodes are the next step in complexity. When photons bombard the junction, current is produced. A photo transistor exhibits the same general characteristics as the photodiode, with the addition of current amplification. It requires more bias current and therefore has a bit more noise, but has a larger lux range. (1k to 100k instead of 7k to 50k). These traditional methods suffer from poor dark current response and temperature sensitivity.

Intersil Light Sensors

Shrinking device sizes have allowed the creation of a hybrid device like the ISL29102. It places a calibrated photodiode, a non-linear current amplifier and a micropower op amp on a single monolithic IC, as shown in Figure 1. The integrated non-linear current amplifier boosts and converts the photodiode signal in a square root fashion, extending the light input dynamic range while maintaining excellent sensitivity at dim conditions. The photodiode array has a peak sensitivity at 550nm similar to human eye response. The input luminance range is 0.3 lux to 10k lux.

Using the same calibrated photodiodes, the ISL29020 includes a micropower 16-bit Analog-to-Digital Converter (ADC) and a serial I^2C interface. The block diagram is shown in Figure 2. The output from the photodiode is calibrated and fed through a current amplifier before entering an integrating ADC, which rejects 50/60Hz noise, and the I^2C interface delivers the digital output signal. In normal operation condition, the power consumption is less than 65µA.The input luminance range is 0.04 lux to 64k lux.

Intersil Proximity Sensors

The ISL29015, shown in Figure 3, contains two photodiode arrays which convert light into current. One photodiode array responds to ambient light and the other responds only to infrared light. When joined with an infrared LED, this second LED array can operate as a proximity sensor. After light is converted to current during the light signal process, the current output is converted to digital by a built-in 16-bit ADC. An I^2C command reads the ambient light or IR intensity in counts. The converter is a charge-balancing integrating type 16-bit ADC. The chosen method for conversion is best for converting small current signals in the presence of an AC periodic noise. A 100ms integration time, for instance, highly rejects 50Hz and 60Hz power line noise simultaneously.

The ADC has an I^2C programmable range select to dynamically accommodate various lighting conditions. For very dim conditions, the ADC can be configured at its lowest range, Range 1. For very bright conditions, the ADC can be configured at its highest range, Range 4.

Ambient Light Sensing Application

Ambient light sensors are included in many laptops and cell phones to sense the environment lighting conditions, allowing for adjustment of the screen's backlight to comfortable levels for the viewer. The range of comfortable levels is dependent on the room's light. The relationship is shown in Figure 4. Understandably, a screen's brightness needs to increase as the ambient light increases. What is less obvious is the need to decrease the brightness in lower light conditions-for comfortable viewing and to save battery life.

In a cell phone, the ambient light sensors are located under a protective cover glass. Because of this protection, most of the ambient light is obstructed. The obstruction reduces the amount of light to be measured, requiring a solution with low-light accuracy. For the accuracy needed in low-light conditions, the best sensor choice is the integrated photodiode with an ADC. Note that the inclusion of a high-pass filter can minimize power supply noise from coupling into the backlight illumination.

Figure 5 shows the complete automatic back light control circuit for cell phones. The ISL29102 senses ambient light intensity and outputs a proportional voltage. The light sensor output current injects into the feedback input of the White LED driver. In a bright environment, the light sensor sources more current into the feedback node. As a result, it reduces the White LED output current and reduces the White LED output light intensity. The extension of battery life is remarkable.

Proximity Sensing Application

While ambient light sensors use the visible part of the spectrum, proximity sensors use the infrared (IR) wavelengths. Instead of measuring the surrounding light, a proximity sensor gauges the closeness of an object - like your face by detecting the IR reflection strength.

Proximity sensors operate with reflections, as shown in Figure 6. An IR LED is chosen to send out an infrared signal. Any object in front of the IR LED causes some of that signal to be reflected back to proximity sensor. More signal is reflected when an object is closer. After calibrating (for losses like the filtering of the cell phone glass), the output of the proximity sensor reveals the distance of an object.

There are many design considerations when using a proximity sensor. The first is obviously the choice of the IR LED to be used. The second is the composition of the object

Polaris EX2034
Nintendo v. Polaris
IPR2023-00778

to be sensed. Most sensors are calibrated with one of the standard reflective surfaces, like 18% reflective gray paper. More signal will be returned to the sensor if the surface has a higher reflectivity.

A second set of design considerations is concerned with mechanical issues. For example, how well is the IR LED isolated from the sensor? Any leakage will taint the readings. Both the placement of the components and any obstructions (purposeful or incidental) must be considered. Additionally, there is usually a panel of glass between the electronics and the user. That cover glass has its own filtering spectrum that must be included in the design.

Conclusion

A wide variety of optical sensors are available in small packages at reasonable prices. Passive solutions have been serving consumers for decades in night lights and still digital cameras. Active solutions have increased the range and usefulness of ambient light sensors. Typical active solutions integrate a photo transistor or a photodiode with a current amplifier. When greater resolution, low-light capability, power supply rejection, or a disabling function would be useful, the Intersil ISL29xxx family extends the usefulness of typical ambient light sensors.

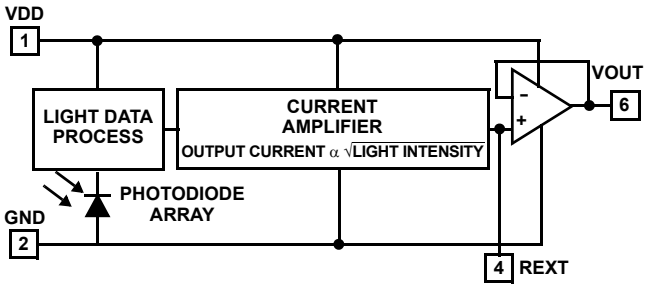

FIGURE 1. BLOCK DIAGRAM OF ISL29102 AMBIENT LIGHT SENSOR WITH INTEGRATED AMPLIFIER

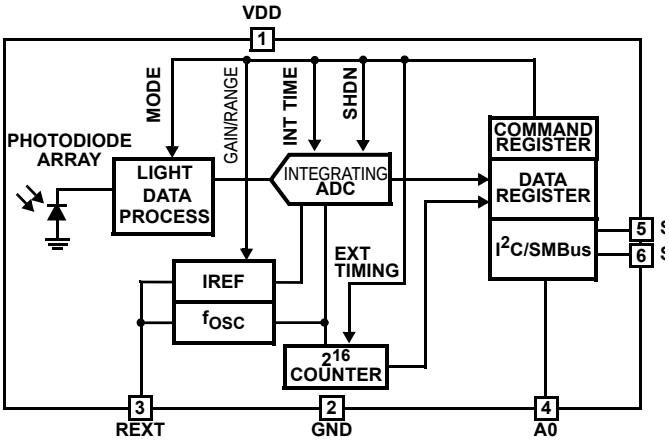

FIGURE 2. BLOCK DIAGRAM OF ISL29020, AMBIENT LIGHT SENSOR WITH ADC, AND I²C INTERFACE

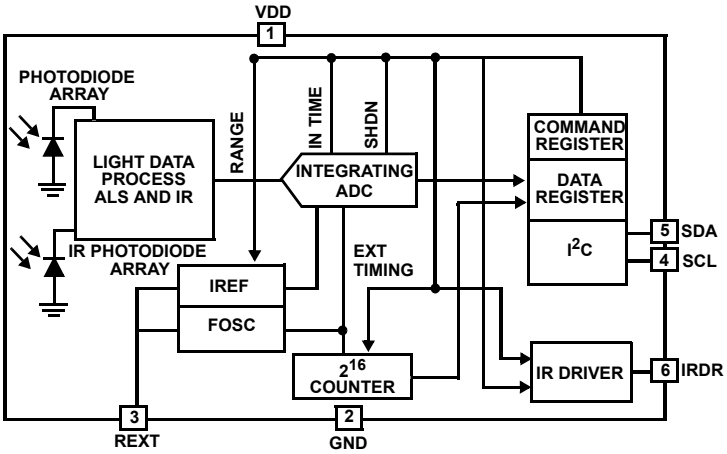

FIGURE 3. BLOCK DIAGRAM OF ISL29015, AMBIENT LIGHT SENSOR AND PROXIMITY SENSOR

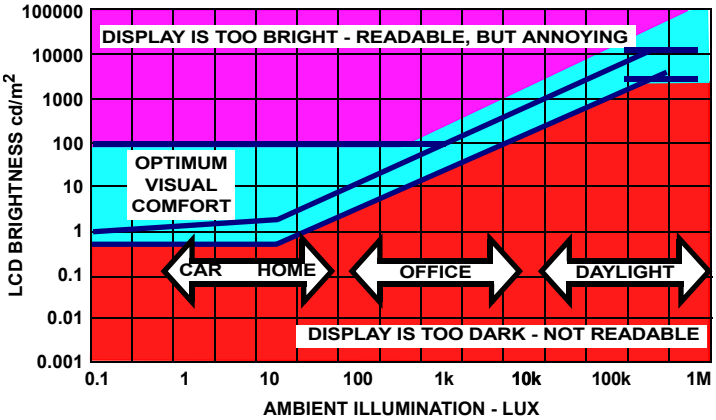

FIGURE 4. GRAPH OF DESIRED BRIGHTNESS WITH RESPECT TO AMBIENT ILLUMINATION

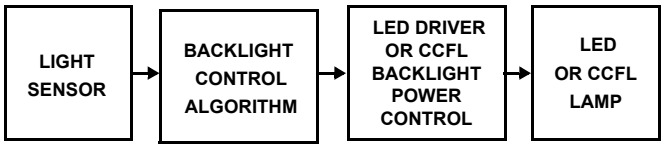

FIGURE 5. BLOCK DIAGRAM OF LIGHT SENSING SYSTEM IN A LAPTOP OR CELL PHONE

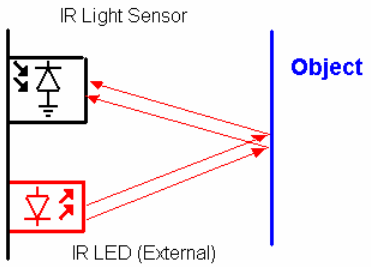

FIGURE 6. APPLICATION DIAGRAM OF PROXIMITY SENSOR

Notice

1. Descriptions of circuits, software and other related information in this document are provided only to illustrate the operation of semiconductor products and application examples. You are fully responsible for the incorporation or any other use of the circuits, software, and information in the design of your product or system. Renesas Electronics disclaims any and all liability for any losses and damages incurred by you or third parties arising from the use of these circuits, software, or information.
2. Renesas Electronics hereby expressly disclaims any warranties against and liability for infringement or any other claims involving patents, copyrights, or other intellectual property rights of third parties, by or arising from the use of Renesas Electronics products or technical information described in this document, including but not limited to, the product data, drawings, charts, programs, algorithms, and application examples.
3. No license, express, implied or otherwise, is granted hereby under any patents, copyrights or other intellectual property rights of Renesas Electronics or others.
4. You shall not alter, modify, copy, or reverse engineer any Renesas Electronics product, whether in whole or in part. Renesas Electronics disclaims any and all liability for any losses or damages incurred by you or third parties arising from such alteration, modification, copying or reverse engineering.
5. Renesas Electronics products are classified according to the following two quality grades: “Standard” and “High Quality”. The intended applications for each Renesas Electronics product depends on the product’s quality grade, as indicated below.
   "Standard": Computers; office equipment; communications equipment; test and measurement equipment; audio and visual equipment; home electronic appliances; machine tools; personal electronic equipment; industrial robots; etc.
   "High Quality": Transportation equipment (automobiles, trains, ships, etc.); traffic control (traffic lights); large-scale communication equipment; key financial terminal systems; safety control equipment; etc.
   Unless expressly designated as a high reliability product or a product for harsh environments in a Renesas Electronics data sheet or other Renesas Electronics document, Renesas Electronics products are not intended or authorized for use in products or systems that may pose a direct threat to human life or bodily injury (artificial life support devices or systems; surgical implantations; etc.), or may cause serious property damage (space system; undersea repeaters; nuclear power control systems; aircraft control systems; key plant systems; military equipment; etc.). Renesas Electronics disclaims any and all liability for any damages or losses incurred by you or any third parties arising from the use of any Renesas Electronics product that is inconsistent with any Renesas Electronics data sheet, user’s manual or other Renesas Electronics document.
6. When using Renesas Electronics products, refer to the latest product information (data sheets, user’s manuals, application notes, “General Notes for Handling and Using Semiconductor Devices” in the reliability handbook, etc.), and ensure that usage conditions are within the ranges specified by Renesas Electronics with respect to maximum ratings, operating power supply voltage range, heat dissipation characteristics, installation, etc. Renesas Electronics disclaims any and all liability for any malfunctions, failure or accident arising out of the use of Renesas Electronics products outside of such specified ranges.
7. Although Renesas Electronics endeavors to improve the quality and reliability of Renesas Electronics products, semiconductor products have specific characteristics, such as the occurrence of failure at a certain rate and malfunctions under certain use conditions. Unless designated as a high reliability product or a product for harsh environments in a Renesas Electronics data sheet or other Renesas Electronics document, Renesas Electronics products are not subject to radiation resistance design. You are responsible for implementing safety measures to guard against the possibility of bodily injury, injury or damage caused by fire, and/or danger to the public in the event of a failure or malfunction of Renesas Electronics products, such as safety design for hardware and software, including but not limited to redundancy, fire control and malfunction prevention, appropriate treatment for aging degradation or any other appropriate measures. Because the evaluation of microcomputer software alone is very difficult and impractical, you are responsible for evaluating the safety of the final products or systems manufactured by you.
8. Please contact a Renesas Electronics sales office for details as to environmental matters such as the environmental compatibility of each Renesas Electronics product. You are responsible for carefully and sufficiently investigating applicable laws and regulations that regulate the inclusion or use of controlled substances, including without limitation, the EU RoHS Directive, and using Renesas Electronics products in compliance with all these applicable laws and regulations. Renesas Electronics disclaims any and all liability for damages or losses occurring as a result of your noncompliance with applicable laws and regulations.
9. Renesas Electronics products and technologies shall not be used for or incorporated into any products or systems whose manufacture, use, or sale is prohibited under any applicable domestic or foreign laws or regulations. You shall comply with any applicable export control laws and regulations promulgated and administered by the governments of any countries asserting jurisdiction over the parties or transactions.
10. It is the responsibility of the buyer or distributor of Renesas Electronics products, or any other party who distributes, disposes of, or otherwise sells or transfers the product to a third party, to notify such third party in advance of the contents and conditions set forth in this document.
11. This document shall not be reprinted, reproduced or duplicated in any form, in whole or in part, without prior written consent of Renesas Electronics.
12. Please contact a Renesas Electronics sales office if you have any questions regarding the information contained in this document or Renesas Electronics products.

(Note 1) “Renesas Electronics” as used in this document means Renesas Electronics Corporation and also includes its directly or indirectly controlled subsidiaries.

(Note 2) “Renesas Electronics product(s)” means any product developed or manufactured by or for Renesas Electronics.

(Rev.4.0-1 November 2017)

SALES OFFICES Renesas Electronics Corporation http://www.renesas.com

Refer to "http://www.renesas.com/" for the latest and detailed information.

Renesas Electronics America Inc.
1001 Murphy Ranch Road, Milpitas, CA 95035, U.S.A.
Tel: +1-408-432-8888, Fax: +1-408-434-5351

Renesas Electronics Canada Limited
9251 Yonge Street, Suite 8309 Richmond Hill, Ontario Canada L4C 9T3
Tel: +1-905-237-2004

Renesas Electronics Europe Limited
Dukes Meadow, Millboard Road, Bourne End, Buckinghamshire, SL8 5FH, U.K
Tel: +44-1628-651-700, Fax: +44-1628-651-804

Renesas Electronics Europe GmbH
Arcadiastrasse 10, 40472 Düsseldorf, Germany
Tel: +49-211-6503-0, Fax: +49-211-6503-1327

Renesas Electronics (China) Co., Ltd.
Room 1709 Quantum Plaza, No.27 ZhichunLu, Haidian District, Beijing, 100191 P. R. China
Tel: +86-10-8235-1155, Fax: +86-10-8235-7679

Renesas Electronics (Shanghai) Co., Ltd.
Unit 301, Tower A, Central Towers, 555 Langao Road, Putuo District, Shanghai, 200333 P. R. China
Tel: +86-21-2226-0888, Fax: +86-21-2226-0999

Renesas Electronics Hong Kong Limited
Unit 1601-1611, 16/F., Tower 2, Grand Century Place, 193 Prince Edward Road West, Mongkok, Kowloon, Hong Kong
Tel: +852-2265-6688, Fax: +852 2886-9022

Renesas Electronics Taiwan Co., Ltd.
13F, No. 363, Fu Shing North Road, Taipei 10543, Taiwan
Tel: +886-2-8175-9600, Fax: +886 2-8175-9670

Renesas Electronics Singapore Pte. Ltd.
80 Bendemeer Road, Unit #06-02 Hyflux Innovation Centre, Singapore 339949
Tel: +65-6213-0200, Fax: +65-6213-0300

Renesas Electronics Malaysia Sdn.Bhd.
Unit 1207, Block B, Menara Amcorp, Amcorp Trade Centre, No. 18, Jln Persiaran Barat, 46050 Petaling Jaya, Selangor Darul Ehsan, Malaysia
Tel: +60-3-7955-9390, Fax: +60-3-7955-9510

Renesas Electronics India Pvt. Ltd.
No.777C, 100 Feet Road, HAL 2nd Stage, Indiranagar, Bangalore 560 038, India
Tel: +91-80-67208700, Fax: +91-80-67208777

Renesas Electronics Korea Co., Ltd.
17F, KAMCO Yangjae Tower, 262, Gangnam-daero, Gangnam-gu, Seoul, 06265 Korea
Tel: +82-2-558-3737, Fax: +82-2-558-5338

© 2018 Renesas Electronics Corporation. All rights reserved.

Colophon 7.0