Technical Note

NAND Flash 101: An Introduction to NAND Flash and How to Design It In to Your Next Product

Introduction

This technical note discusses the basics of NAND Flash and demonstrates its power, density, and cost advantages for embedded systems. It covers data reliability and methods for overcoming common interface design challenges, focusing on the actual hardware and software components necessary to enable designers to build complete and functional subsystems.

Embedded systems have traditionally utilized NOR Flash for nonvolatile memory. Many current designs are moving to NAND Flash to take advantage of its higher density and lower cost for high-performance applications.

Figure 1 shows how demand for NAND Flash has been driven by three major markets—digital camera media cards, USB flash drives, and MP3 players. Figure 2 on page 2 shows the quarterly supply of NAND Flash devices, indicating that single-level cell (SLC) NAND Flash remains the market leader, followed by multi-level cell (MLC) NAND Flash.

Figure 1: Three Major Markets Driving NAND Flash

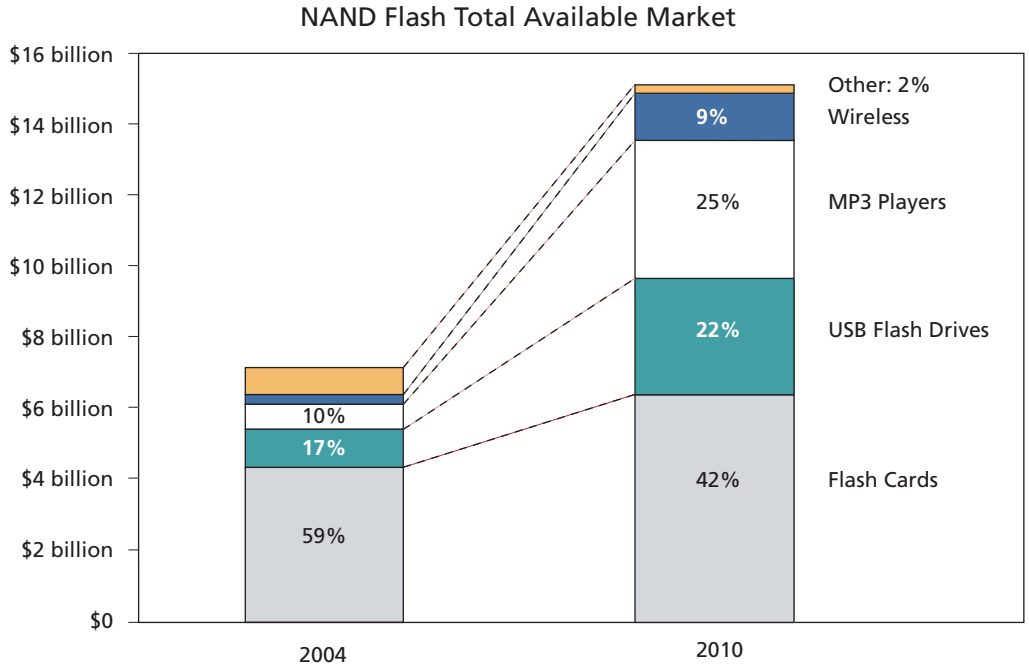

Source: Gartner, 9/13/05; Micron Market Research

INTEL-1010
9,135,190

Micron Technology, Inc., reserves the right to change products or specifications without notice.
©2006 Micron Technology, Inc. All rights reserved.

Products and specifications discussed herein are for evaluation and reference purposes only and are subject to change by Micron without notice. Products are only warranted by Micron to meet Micron's production data sheet specifications. All information discussed herein is provided on an "as is" basis, without warranties of any kind.

Figure 2: Quarterly Supply of NAND Flash

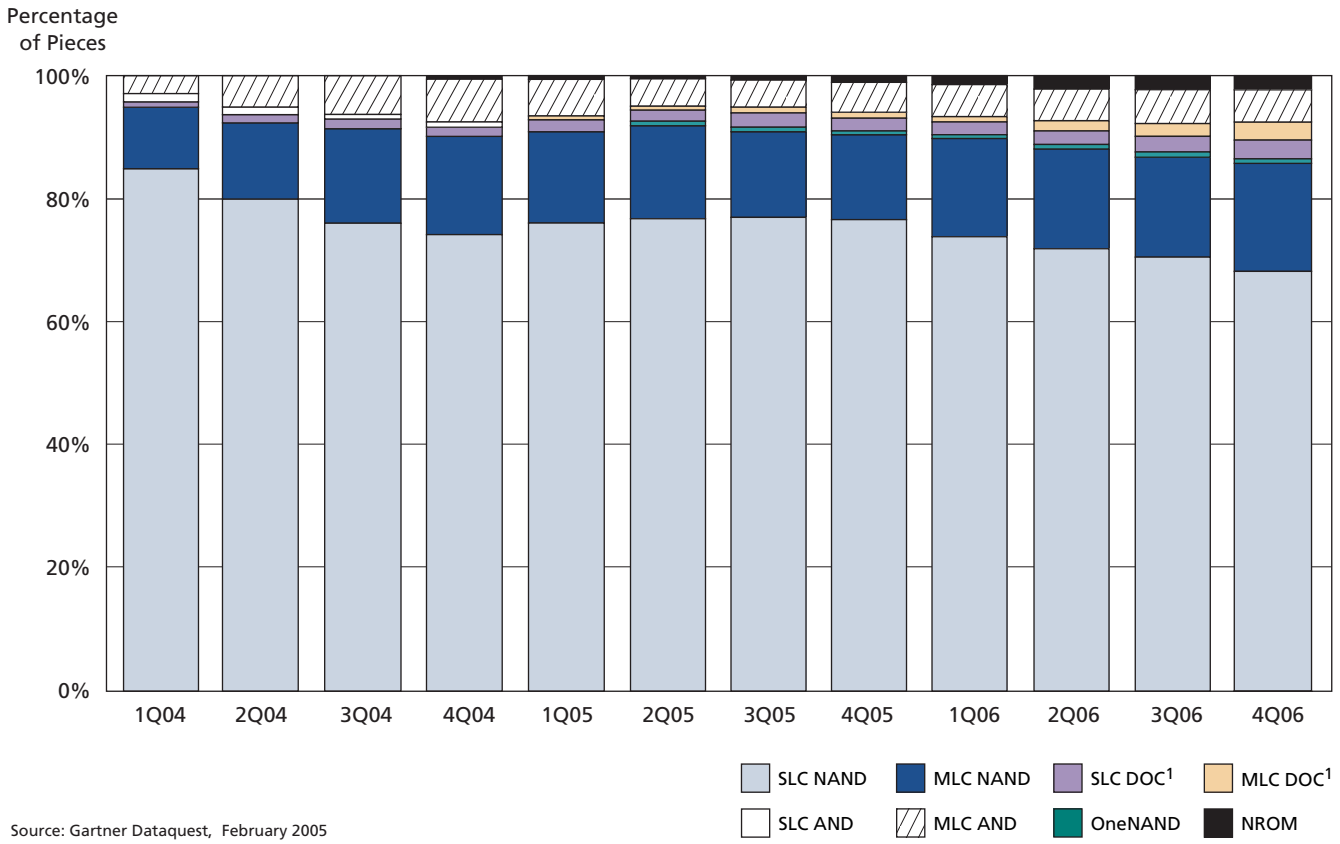

Source: Gartner Dataquest, February 2005

Notes: 1. "DOC" refers to DiskOnChip® embedded flash drive products from M-Systems Flash Disk Pioneers Ltd.

NAND Flash is better suited to meet the storage requirements of many consumer audio and video products, especially low-capacity applications (4GB or less), than a hard drive. As the quest continues for lower-power, lighter, more robust products, NAND Flash will prove to be an ideal solution for a wider range of applications.

Flash Basics

The NAND Flash array is grouped into a series of blocks, which are the smallest erasable entities in a NAND Flash device.

A NAND Flash block is 128KB. Erasing a block sets all bits to "1" (and all bytes to FFh). Programming is necessary to change erased bits from "1" to "0." The smallest entity that can be programmed is a byte. Some NOR Flash memory can perform READ-While-WRITE operations. Although NAND FLASH cannot perform READs and WRITEs simultaneously, it is possible to accomplish READ/WRITE operations at the system level using a method called shadowing. Shadowing has been used on personal computers for many years to load the BIOS from the slower ROM into the higher-speed RAM.

Micron Technology, Inc., reserves the right to change products or specifications without notice.
©2006 Micron Technology, Inc. All rights reserved.

There is a limit to the number of times NAND Flash blocks can reliably be programmed and erased. Nominally, each NAND block will survive 100,000 PROGRAM/ERASE cycles. A technique known as wear leveling ensures that all physical blocks are exercised uniformly. To maximize the lifespan of a design, it is critical to implement both wear leveling and bad-block management.

Figure 3 shows a comparison of NAND Flash and NOR Flash cells. NAND efficiencies are due in part to the small number of metal contacts in the NAND Flash string. NAND Flash cell size is much smaller than NOR Flash cell size—$4F^2$ compared to $10F^2$—because NOR Flash cells require a separate metal contact for each cell.

Figure 3: Comparison of NAND and NOR Flash Cells

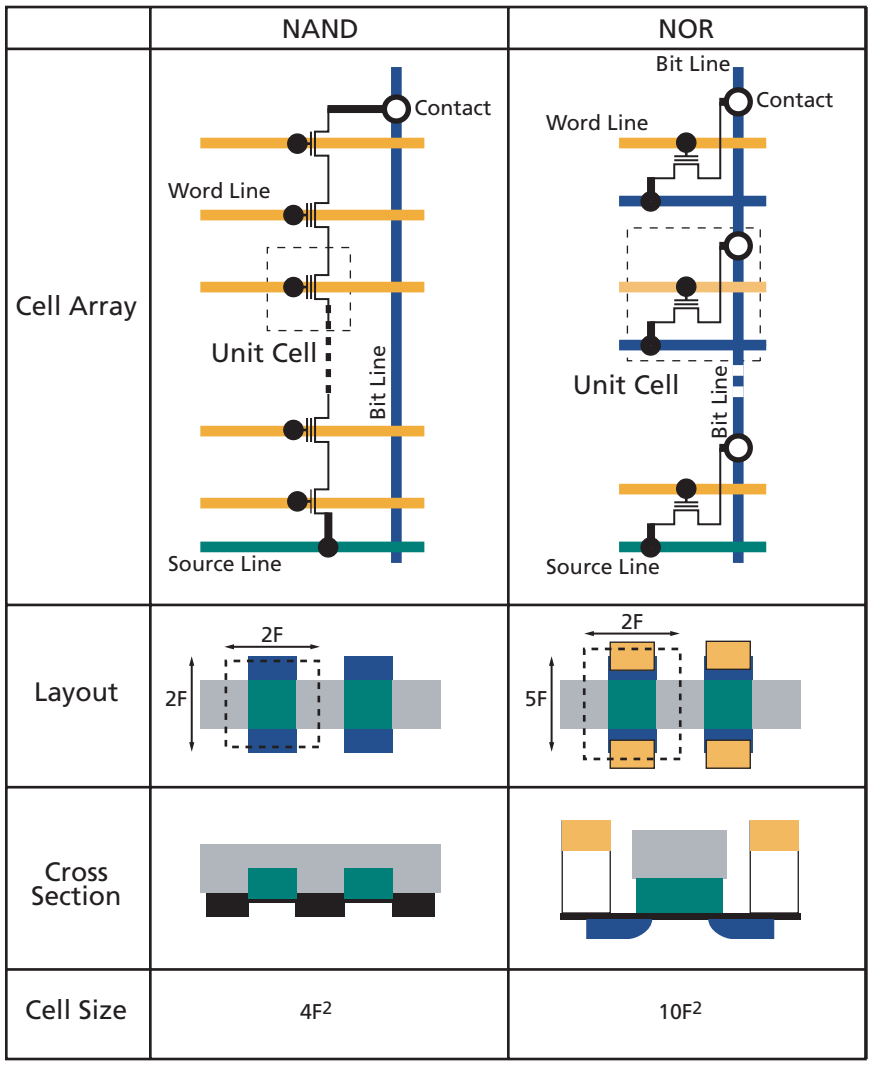

NAND Flash is very similar to a hard-disk drive. It is sector-based (page-based) and well suited for storage of sequential data such as pictures, video, audio, or PC data. Although random access can be accomplished at the system level by shadowing the data to RAM, doing so requires additional RAM storage. Also, like a hard-disk drive, a NAND Flash device may have bad blocks and requires error-correction code (ECC) to maintain data integrity.

Micron Technology, Inc., reserves the right to change products or specifications without notice.
©2006 Micron Technology, Inc. All rights reserved.

NAND Flash cells are 60 percent smaller than NOR Flash cells, providing the higher densities required for today's low-cost consumer devices in a significantly reduced die area. NAND Flash is used in virtually all removable cards, including USB drives, secure digital (SD) cards, memory stick cards, CompactFlash® cards, and multimedia cards (MMCs). The NAND Flash multiplexed interface provides a consistent pinout for all recent devices and densities. This pinout allows designers to use lower densities and migrate to higher densities without any hardware changes to the printed circuit board.

NAND vs. NOR Comparison

Advantages of Each Device

There are specific advantages and disadvantages to using NAND Flash or NOR Flash in embedded systems (see Table 1). NAND Flash is best suited for file or sequential-data applications; NOR Flash is best suited for random access. Advantages of NAND Flash over NOR Flash include fast WRITE (program) and ERASE operations. NOR Flash advantages are its random-access and byte-write capabilities.

Random access gives NOR Flash its execute-in-place (XiP) functionality, which is often required in embedded applications. An increasing number of processors include a direct NAND Flash interface and can boot directly from the NAND Flash device (without NOR Flash). These processors provide a very attractive solution when cost, space, and storage capacity are important. Using these processors, XiP capability will cease to be a consideration when designing NAND Flash into embedded applications.

Disadvantages of Each Device

The main NAND Flash disadvantage is slow random access; NOR Flash is hampered by slow WRITE and ERASE performance.

Table 1: NAND Flash vs. NOR Flash

	NAND	NOR
Advantages	Fast WRITEs	Random access
	Fast ERASEs	Byte WRITEs possible
Disadvantages	Slow random access	Slow WRITEs
	Byte WRITEs difficult	Slow ERASEs
Applications	File (disk) applications	Replacement of EPROM
	Voice, data, video recorder	Execute directly from nonvolatile memory
	Any large sequential data	

Random Access Timing

Random access time on NOR Flash is specified at 0.12µs; on NAND Flash, random access time for the first byte only is significantly slower—25µs (see Table 2 on page 5). However, after initial access has been made, the remaining 2,111 bytes are shifted out of NAND at a mere 0.03µs per byte. This results in a bandwidth of more than 23 MB/s for 8-bit I/Os and 37 MB/s for 16-bit I/Os.

Micron Technology, Inc., reserves the right to change products or specifications without notice.
©2006 Micron Technology, Inc. All rights reserved.

Table 2: NAND/NOR Characteristics

Characteristic	NAND Flash: MT29F2G08A	NOR Flash: MT28F128J3
Random access READ	25µs (first byte) 0.03µs each for remaining 2,111 bytes	0.12µs
Sustained READ speed (sector basis)	23 MB/s (x8) or 37 MB/s (x16)	20.5 MB/s (x8) or 41 MB/s (x16)
Random WRITE speed	≈300µs/2,112 bytes	180µs/32 bytes
Sustained WRITE speed (sector basis)	5 MB/s	0.178 MB/s
Erase block size	128KB	128KB
ERASE time per block (TYP)	2ms	750ms

NAND Flash Design Benefits

The real benefits of NAND Flash are faster PROGRAM and ERASE times, as NAND Flash delivers sustained WRITE performance exceeding 5 MB/s. Block erase times are an impressive 2ms for NAND Flash compared with 750ms for NOR Flash. Clearly, NAND Flash offers several compelling advantages. The one challenge is that it is not well-suited for direct random access. As noted previously, this can be handled with code shadowing.

Structural Differences

NAND Flash offers several structural advantages over NOR Flash, starting with the pin count. The hardware pin requirements for NAND Flash and NOR Flash interfaces differ markedly. NOR Flash requires approximately 41 I/O pins for a 16-bit device, while NAND Flash requires only 24 pins for a comparable interface (see Table 3). The multiplexed command, address, and data bus reduces the number of required pins by nearly 42 percent. An added benefit of the multiplexed interface is that higher-density NAND Flash devices can be supported using the same hardware design and printed circuit board (PCB) used for lower densities. The common TSOP-1 package has been in use for many years, and this feature enables customers to migrate to higher-density NAND Flash devices using the same PCB design.

Another advantage of NAND Flash is evident in the packaging options: NAND Flash offers a monolithic 2Gb die or it can support up to four stacked die, accommodating an 8Gb device in the same TSOP-1 package. This makes it possible for a single package and interface to support higher densities in the future.

Table 3: Required Hardware Pins

NAND Flash: 24 Pins (x16)		NOR Flash: 41 Pins	
I/O device-type interface, composed of:		Random-access interface, typically composed of:	
CE#	Chip enable	CE#	Chip enable
WE#	Write enable	WE#	Write enable
RE#	Read enable	OE#	Output enable
CLE	Command latch enable	D[15:0]	Data bus
ALE	Address latch enable	A[20:0]	Address bus
I/O[7:0]	Data bus (I/O[15:0} for x16 parts)	WP#	Write protect
WP#	Write protect		
R/B#	Ready/busy		
PRE	Power-on read enable (useful for system boot)		

Micron Technology, Inc., reserves the right to change products or specifications without notice.
©2006 Micron Technology, Inc. All rights reserved.

NAND Flash Architecture and Basic SLC Operation

The 2Gb NAND Flash device is organized as 2,048 blocks, with 64 pages per block (see Figure 4). Each page is 2,112 bytes, consisting of a 2,048-byte data area and a 64-byte spare area. The spare area is typically used for ECC, wear-leveling, and other software overhead functions, although it is physically the same as the rest of the page. NAND Flash devices are offered with either an 8- or a 16-bit interface. Host data is connected to the NAND Flash memory via an 8-bit- or 16-bit-wide bidirectional data bus. For 16-bit devices, commands and addresses use the lower 8 bits (7:0). The upper 8 bits of the 16-bit data bus are used only during data-transfer cycles.

Figure 4: 2Gb NAND Flash Device Organized as 2,048 Blocks

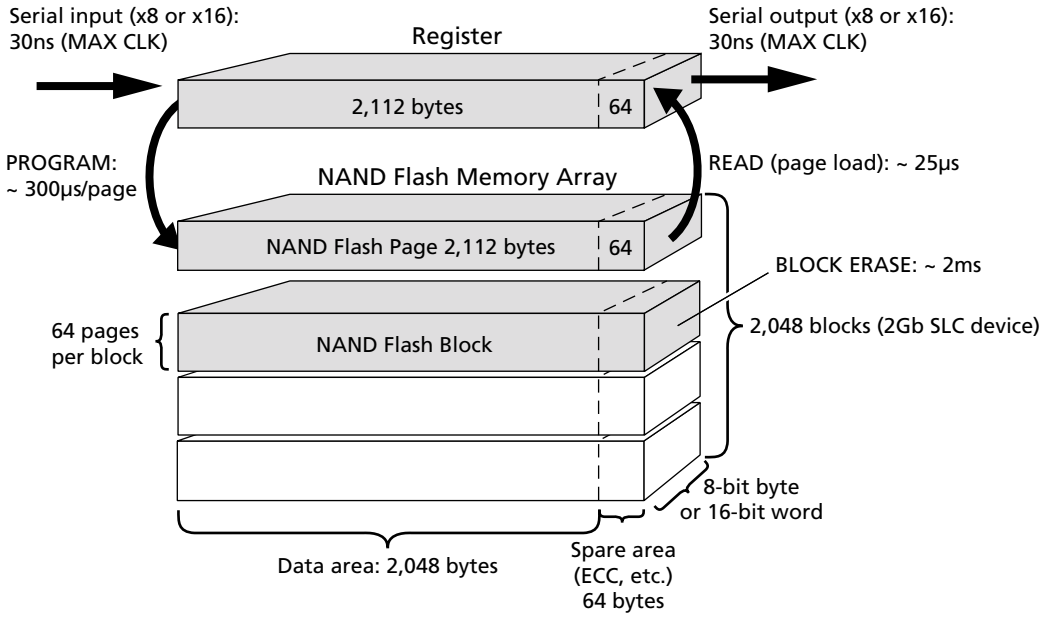

Erasing a block requires approximately 2ms. After the data is loaded in the register, programming a page requires approximately 300µs. A PAGE READ operation requires approximately 25µs, during which the page is accessed from the array and loaded into the 16,896-bit (2,112-byte) register. The register is then available for the user to clock out the data.

In addition to the I/O bus, the NAND Flash interface consists of six major control signals (see Table 4 on page 7). (Note: The symbol "#" after a signal indicates that the signal is asserted LOW.)

Micron Technology, Inc., reserves the right to change products or specifications without notice.
©2006 Micron Technology, Inc. All rights reserved.

Table 4: Signal Descriptions

Symbol	Signal	Description
ALE	Address latch enable	When ALE is HIGH, addresses are latched into the NAND Flash address register on the rising edge of the WE# signal.
CE#	Chip enable	If CE is not asserted, the NAND Flash device remains in standby mode and does not respond to any control signals.
CLE	Command latch enable	When CLE is HIGH, commands are latched into the NAND Flash command register on the rising edge of the WE# signal.
R/B#	Ready/busy#	If the NAND Flash device is busy with an ERASE, PROGRAM, or READ operation, the R/B# signal is asserted LOW. The R/B# signal is open drain and requires a pull-up resistor.
RE#	Read enable	RE# enables the output data buffers.
WE#	Write enable	WE# is responsible for clocking data, address, or commands into the NAND Flash device.

Data is shifted into or out of the NAND Flash register 8 or 16 bits at a time. In a PROGRAM operation, the data to be programmed is clocked into the data register on the rising edge of WE#. Special commands are used to randomly access data or move data around within the register to make random access possible; see "RANDOM DATA INPUT Operation" on page 15 and "READ FOR INTERNAL DATA MOVE Command" on page 21.

Data is output from the data register in a similar fashion by means of the read enable (RE#) signal, which is responsible for outputting the current data and incrementing to the next location. The WE# and RE# clocks can run as fast as 30ns per transfer. When RE# or chip enable (CE#) are not asserted LOW, the output buffers are tri-stated. This combination of CE# and RE# enables the output buffers, enabling NAND Flash to share the data bus with other types of memory, such as NOR Flash, SRAM, or DRAM. This feature is sometimes referred to as "chip enable don't care." The primary purpose of this reference is to differentiate very old NAND Flash devices, which require CE# to be asserted for the entire cycle.

All NAND Flash operations are started by issuing a command cycle. This is accomplished by placing the command on I/O[7:0], driving CE# LOW and CLE HIGH, then issuing a WE# clock. Commands, addresses, and data are clocked into the NAND Flash device on the rising edge of the WE# signal (see Figure 5 and Table 5 on page 8).

Most commands require a number of address cycles followed by a second command cycle. With the exception of the RESET and READ STATUS commands, new commands should not be issued when the device is busy (see Figure 5 and Table 5 on page 8).

Micron Technology, Inc., reserves the right to change products or specifications without notice.
©2006 Micron Technology, Inc. All rights reserved.

Figure 5: Command Cycles for NAND Flash Operations

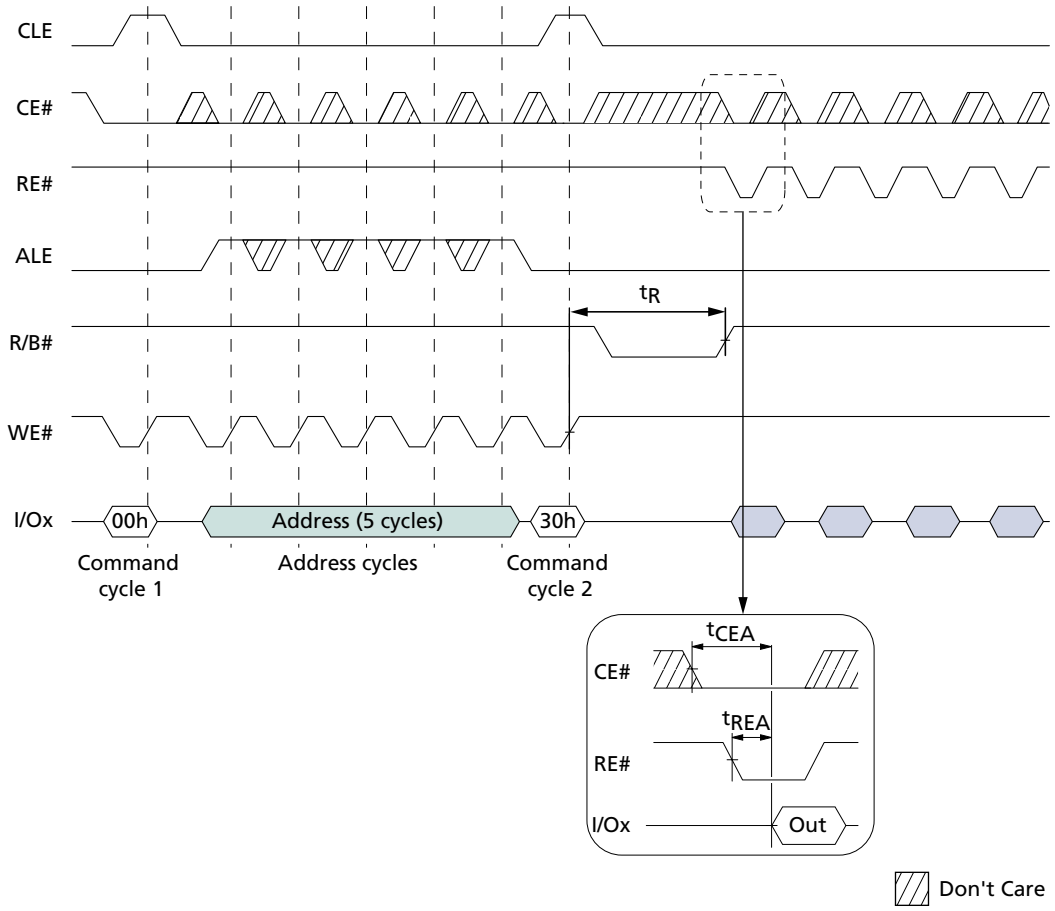

Table 5: Command Cycles and Address Cycles

Command	Command Cycle 1	Number of Address Cycles	Data Cycles Required[1]	Command Cycle 2	Valid During Busy
PAGE READ	00h	5	No	30h	No
PAGE READ CACHE MODE START	31h	–	No	–	No
PAGE READ CACHE MODE START LAST	3Fh	–	No	–	No
READ for INTERNAL DATA MOVE	00h	5	No	35h	No
RANDOM DATA READ	05h	2	No	E0h	No
READ ID	90h	1	No	–	No
READ STATUS	70h	–	No	–	Yes
PROGRAM PAGE	80h	5	Yes	10h	No
PROGRAM PAGE CACHE MODE	80h	5	Yes	15h	No
PROGRAM for INTERNAL DATA MOVE	85h	5	Optional	10h	No
RANDOM DATA INPUT	85h	2	Yes	–	No
BLOCK ERASE	60h	3	No	D0h	No
RESET	FFh	–	No	–	Yes

Micron Technology, Inc., reserves the right to change products or specifications without notice.
©2006 Micron Technology, Inc. All rights reserved.

The addressing scheme for a 2Gb NAND Flash device is shown in Table 6. The first and second address cycles specify the column address, which specifies the starting byte within the page. The last column location is "2,112," so the address of this last location is 08h (in the second byte) and 3Fh (in the first byte). PA[5:0] specify the page address within the block, and BA[16:6] specify the block address. While the full 5-byte address is required for most PROGRAM and READ operations, only the first and second bytes are required for operations that access data randomly within the page. The BLOCK ERASE operation requires only the three most significant bytes (third, fourth, and fifth) to select the block.

Table 6: 2Gb SLC NAND Flash Addressing Scheme

Cycle	I/O7	I/O6	I/O5	I/O4	I/O3	I/O2	I/O1	I/O0
First	CA7	CA6	CA5	CA4	CA3	CA2	CA1	CA0
Second	LOW	LOW	LOW	LOW	CA11	CA10	CA9	CA8
Third	BA7	BA6	PA5	PA4	PA3	PA2	PA1	PA0
Fourth	BA15	BA14	BA13	BA12	BA11	BA10	BA9	BA8
Fifth	LOW	LOW	LOW	LOW	LOW	LOW	LOW	BA16

Notes: 1. Block address concatenated with page address = actual page address. CAx = column address; PAx = page address; BAx = block address.
2. If CA11 = "1," then CA[10:6] must be "0."

Micron Technology, Inc., reserves the right to change products or specifications without notice.
©2006 Micron Technology, Inc. All rights reserved.

NAND Flash Commands

This section discusses NAND Flash commands, from simple to complex.

For each command, CE# must be LOW, CLE, and ALE must be asserted, and write clocks (WE#) must be provided. While the device is busy, only two commands can be issued: RESET and READ STATUS.

RESET Operation

The simplest NAND Flash command is the RESET (FFh) command (see Figure 6). The RESET command does not require an address or subsequent cycle(s) (see Table 5 on page 8). Simply assert CLE and issue a write pulse with FFh on the data bus, and a RESET operation is performed.

RESET is one of two commands that can be issued while the NAND Flash device is busy (see Table 5 on page 8). If the device is busy processing a previous command, issuing a RESET command aborts the previous operation. If the previous operation was an ERASE or PROGRAM command, issuing a RESET command aborts the command prematurely, and the desired operation does not complete. ERASE and PROGRAM can be time-consuming operations; issuing the RESET command makes it possible to abort either and reissue the command at a later time.

Figure 6: RESET Command

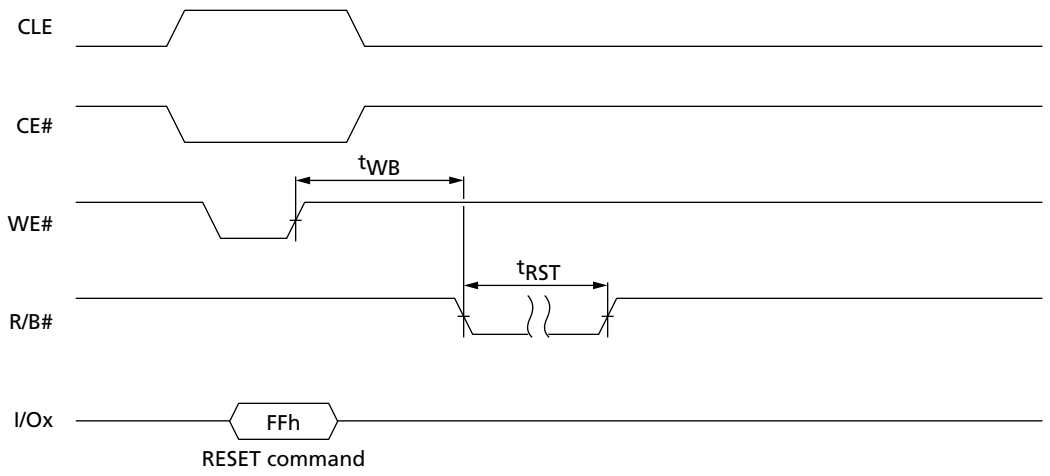

Micron Technology, Inc., reserves the right to change products or specifications without notice.
©2006 Micron Technology, Inc. All rights reserved.

READ ID Operation

The READ ID (90h) command requires one dummy address cycle (00h), but it does not require a second command cycle (see Table 5 on page 8). After the command and dummy addresses are issued, the ID data can be read out by keeping CLE and ALE LOW and toggling the RE# signal for each byte of ID. Figure 7 shows the timing of the READ ID operation, and Table 7 shows the format of the 4-byte response.

Figure 7: READ ID Command

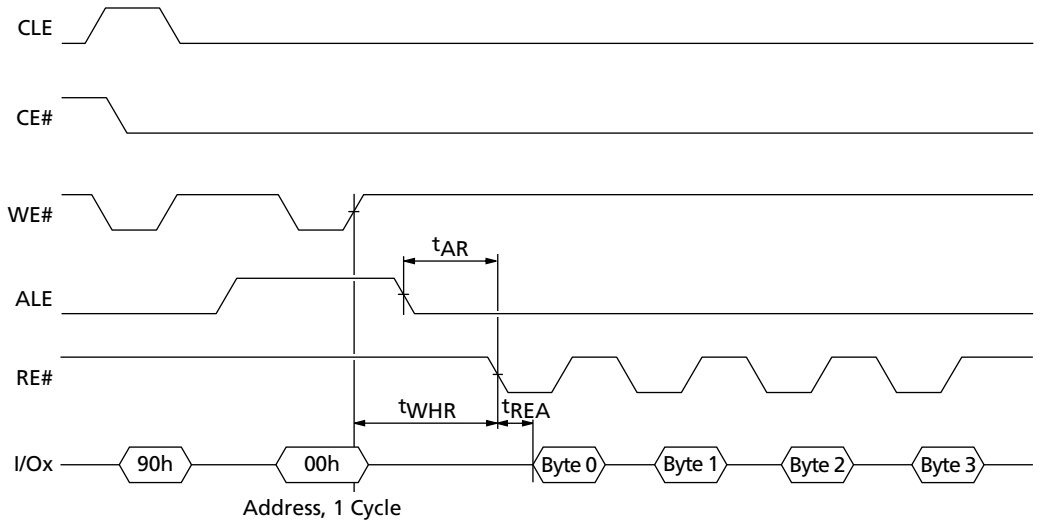

Table 7: READ ID Response

	Option	I/O7	I/O6	I/O5	I/O4	I/O3	I/O2	I/O1	I/O0	Value1
Byte 0	Manufacturer ID									
	Micron	0	0	1	0	1	1	0	0	2Ch
Byte 1	Device ID									
MT29F2G08AAC	2Gb, x8, 3V	1	1	0	1	1	0	1	0	DAh
MT29F2G08ABC	2Gb, x8, 1.8V	1	0	1	0	1	0	1	0	AAh
MT29F2G16AAC	2Gb, x16, 3V	1	1	0	0	1	0	1	0	CAh
MT29F2G16ABC	2Gb, x16, 1.8V	1	0	1	1	1	0	1	0	BAh
Byte 2										
Byte value	Don't Care	x	x	x	x	x	x	x	x	XXh
Byte 3										
Page size	2KB							0	1	01b
Spare area size (bytes)	64					0	1			01b
Block size (w/o spare)	128KB			0	1					01b
Organization	x8		0							0b
	x16		1							1b
Reserved		0								0b
Byte value	x8	0	0	0	1	0	1	0	1	15h
	x16	0	1	0	1	0	1	0	1	55h

Micron Technology, Inc., reserves the right to change products or specifications without notice.
©2006 Micron Technology, Inc. All rights reserved.

READ STATUS Operation

READ STATUS (70h) is the second command that can be issued while the NAND Flash device is busy. This command does not require an address or second command cycle. The status of the NAND Flash device can be monitored by issuing the RE# clock signal following the READ STATUS command. If the READ STATUS command is used to monitor the ready state of the device, the command should be issued only one time, and the status can be re-read by re-issuing the RE# clock. Alternatively, the RE# signal can be kept LOW, waiting to receive the appropriate status bit before proceeding. READ STATUS also reports the status of the write-protect signal, and the pass/fail status of previous PROGRAM or ERASE operations. It is mandatory that the "pass" status be attained on PROGRAM or ERASE operations to ensure proper data integrity.

Table 8: READ STATUS Response

SR Bit	PROGRAM PAGE	PROGRAM PAGE CACHE MODE	PAGE READ	PAGE READ CACHE MODE	BLOCK ERASE	Definition
0	Pass/fail	Pass/fail (N)	–	–	Pass/fail	"0" = Successful PROGRAM/ERASE "1" = Error in PROGRAM/ERASE
1	–	Pass/fail (N - 1)	–	–	–	"0" = Successful PROGRAM/ERASE "1" = Error in PROGRAM/ERASE
2	–	–	–	–	–	"0"
3	–	–	–	–	–	"0"
4	–	–	–	–	–	"0"
5	Ready/busy	Ready/busy[1]	Ready/busy	Ready/busy[1]	Ready/busy	"0" = Busy "1" = Ready
6	Ready/busy	Ready/busy cache[2]	Ready/busy	Ready/busy cache[2]	Ready/busy	"0" = Busy "1" = Ready
7	Write protect	Write protect	Write protect	Write protect	Write protect	"0" = Protected "1" = Not protected
[15:8]	–	–	–	–	–	"0"
1	–	Pass/fail (N-1)	–	–	–	"0" = Successful PROGRAM/ERASE "1" = Error in PROGRAM/ERASE

Notes: 1. Status register bit 5 is "0" during the actual programming operation. If cache mode is used, this bit will be "1" when all internal operations are complete.
2. Status register bit 6 is "1" when the cache is ready to accept new data. R/B# follows bit 6.

Micron Technology, Inc., reserves the right to change products or specifications without notice.
©2006 Micron Technology, Inc. All rights reserved.

ERASE Operation

The BLOCK ERASE (60h) operation erases an entire block of 64 pages, or 128KB total. To issue a BLOCK ERASE operation, use the WE# signal to clock in the ERASE (60h) command with CLE asserted. Next, clock in three address cycles, keeping ALE asserted for each byte of address. These three address cycles are the most significant address cycles (shown in Table 6 on page 9), and include the block address and the page address. The page address portion (the six low-order bits of the third address cycle) is ignored, and only the block address portion of the three most significant bytes is used. After the address is input completely, issue the second command (command cycle 2) of D0h, which is clocked in with WE# while CLE is being asserted. This confirms the ERASE operation, and the device goes busy for approximately 2ms. When the device completes this operation, it is ready for another command. The READ STATUS command can be issued at any time, even when the device is busy during the ERASE operation. The microprocessor or controller can monitor the device via the READ STATUS command.

Figure 8: ERASE Command

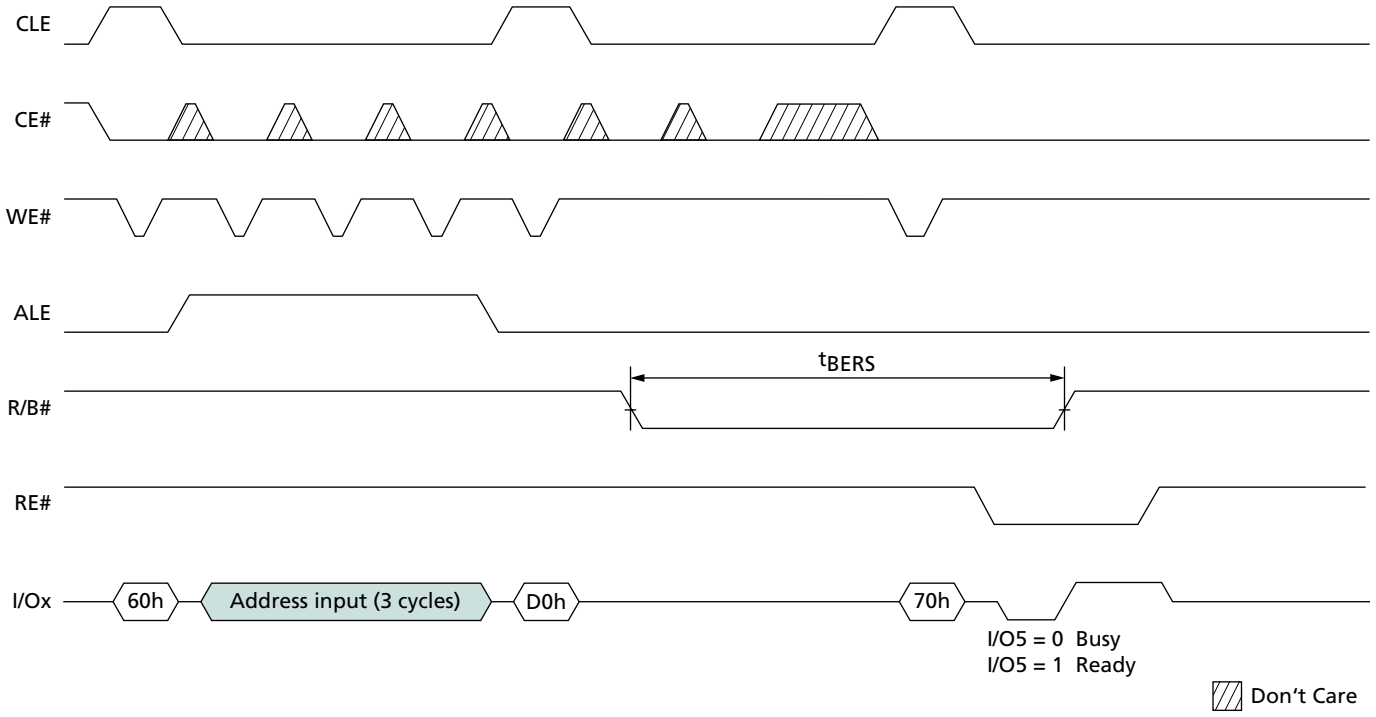

Micron Technology, Inc., reserves the right to change products or specifications without notice.
©2006 Micron Technology, Inc. All rights reserved.

PROGRAM Operations

PROGRAM operations can only program bits to “0” and assume that the user started with a previously erased block.

If the user does not want to program a bit (or group of bits), the bits can be kept in the erased state by setting that particular bit/group to “1.”

When the PROGRAM PAGE (80h) command is received, the input register is reset (internally) to all “1s.” This supports inputting only bytes of data that are to be programmed with “0” bits. The PROGRAM operation starts with the 80h command (with CLE asserted—see Figure 9). Next, drop CLE and assert ALE to input the full five address cycles. After the command and address are input, data is input to the register. When all the data has been input, the 10h command is issued to confirm the previous command and start the programming operation.

A PROGRAM operation typically requires 300µs, although it may require as much as 700µs. It is mandatory that the user read the status and check for successful operation. If the operation is not successful, the block should be logged as a bad block and not used in the future. All data should be moved to a good block.

Figure 9: PROGRAM Command

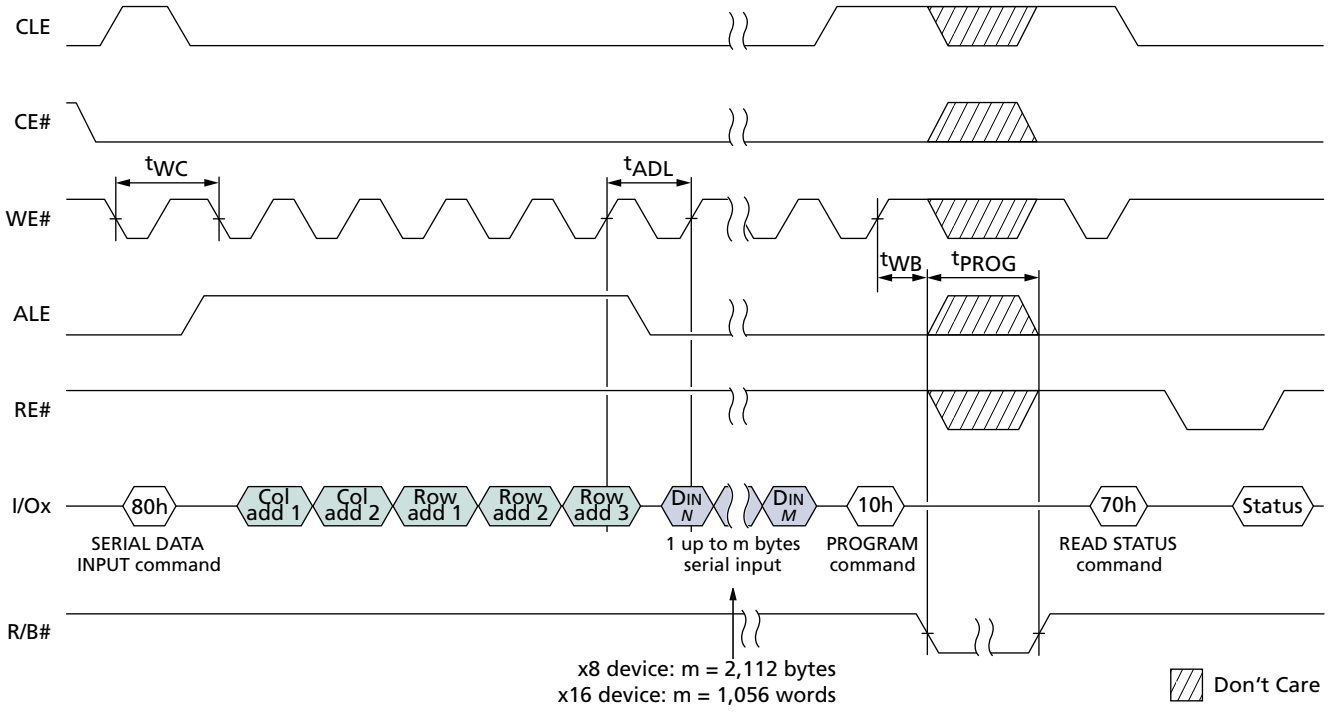

Micron Technology, Inc., reserves the right to change products or specifications without notice.
©2006 Micron Technology, Inc. All rights reserved.

RANDOM DATA INPUT Operation

The next command is the RANDOM DATA INPUT (85h) command. As the boxed area in Figure 10 shows, this command requires only 2 bytes of address followed by the data. This command is useful to access data randomly within a page—for example, to access ECC data. RANDOM DATA INPUT can be used to jump to the end of the page and write the ECC data. The user can input as many address and data combinations as desired. It is only after the 10h command is issued that the data is actually programmed to the selected page.

Figure 10: PROGRAM Command with Random Data Input

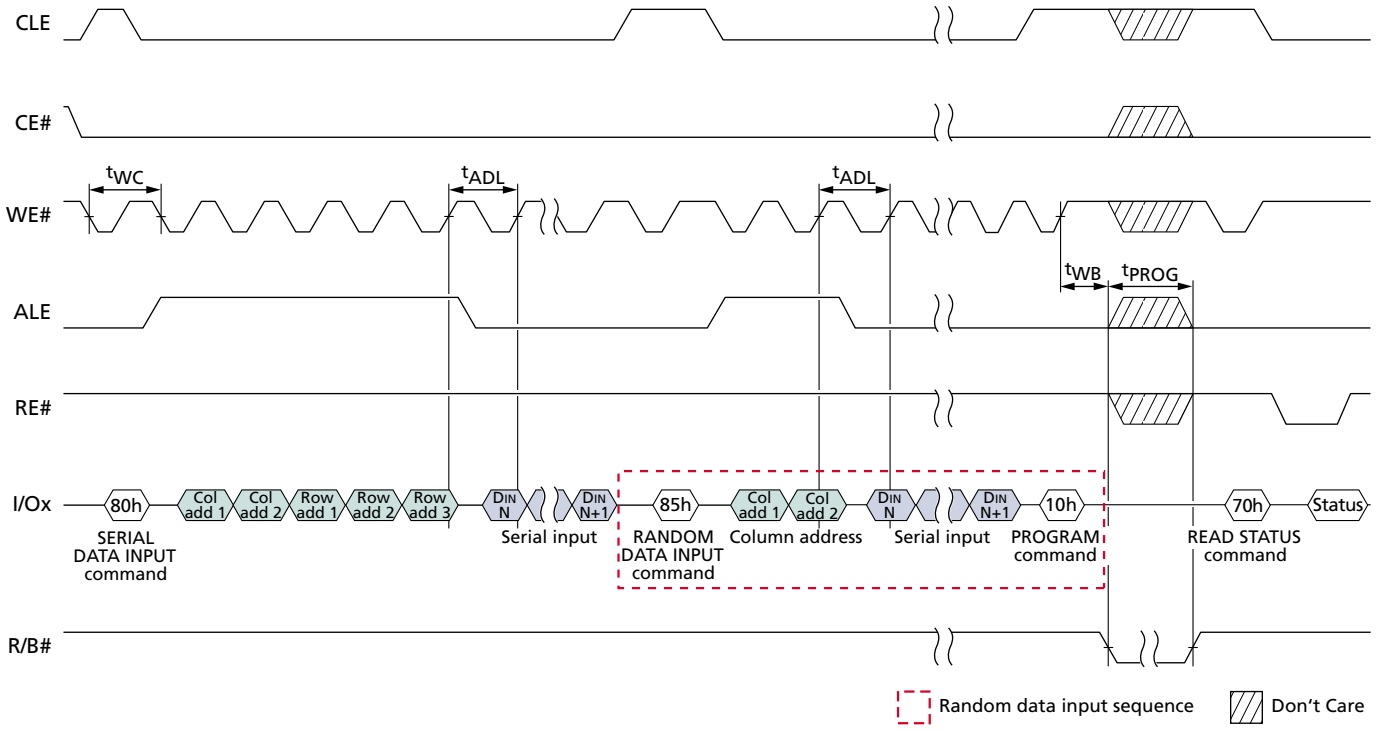

Partial-Page Programming

Due to the large size of NAND Flash pages, partial-page programming is useful for storing smaller amounts of data. Each NAND page can accommodate four PC-sized, 512-byte sectors. The spare area of each page provides additional storage for ECC and other software information.

While it is advantageous to write all four sectors at once, often this is not possible. For example, when data is appended to a file, the file might start out as 512 bytes, then grow to 1,024 bytes. In this situation, a second PROGRAM PAGE operation is required to write the second 512 bytes to the NAND Flash device. The maximum number of times a partial page can be programmed before an ERASE is required is eight; this accommodates four sectors of data and four sectors of ECC, each programmed separately.

Micron Technology, Inc., reserves the right to change products or specifications without notice.
©2006 Micron Technology, Inc. All rights reserved.

Storage Methods

The two common methods for storing data and spare information in the same page are shown in Figure 11. The first method shows a data area of 512 bytes plus the 16-byte spare area directly adjacent to it; 528 bytes for the combined areas. A 2,112-byte page can contain four of these 528-byte elements. The second implementation involves storing the data and spare information separately. The four 512-byte data areas are stored first, and their corresponding 16-byte spare areas follow, in order, at the end of the page.

Figure 11: Typical Storage Methods

Adjacent Data and Spare Areas

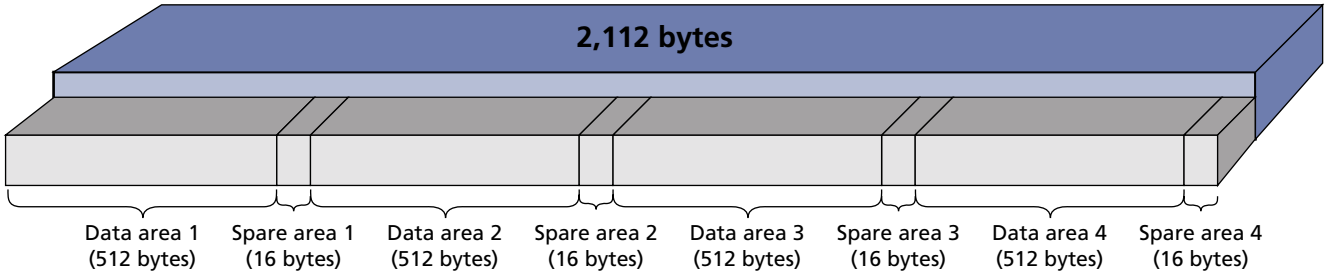

Separate Data and Spare Areas

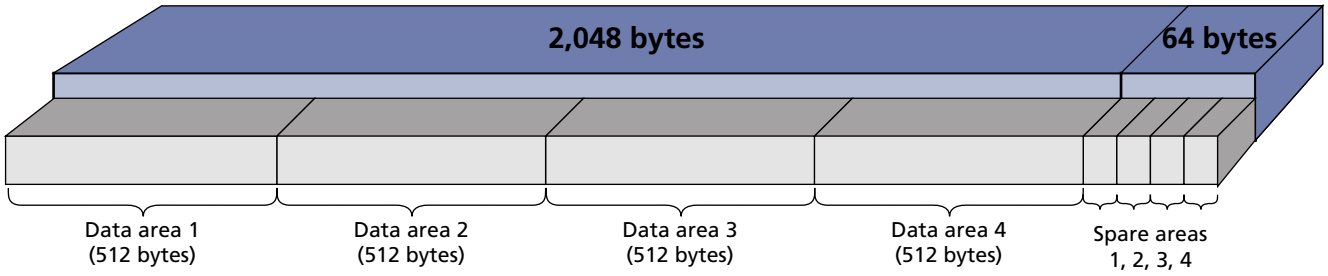

Micron Technology, Inc., reserves the right to change products or specifications without notice.
©2006 Micron Technology, Inc. All rights reserved.

READ Operation

A READ operation starts with the 00h command, followed by five address cycles, then the 30h command to confirm the command sequence (see Figure 12). After the READ transfer time (^{t}R) of approximately 25µs has elapsed, the data is loaded into the register and ready for output. Issuing a read enable (RE#) clock enables the NAND Flash device to output the first byte of data corresponding to the column address specified in the address. Subsequent transitions of RE# output successive locations. When the RE# signal is HIGH (not asserted), the I/O lines are tri-stated. Reading past the end of the device (byte 2,112 or word 1,056) results in invalid data.

Figure 12: READ and RANDOM DATA READ Operations

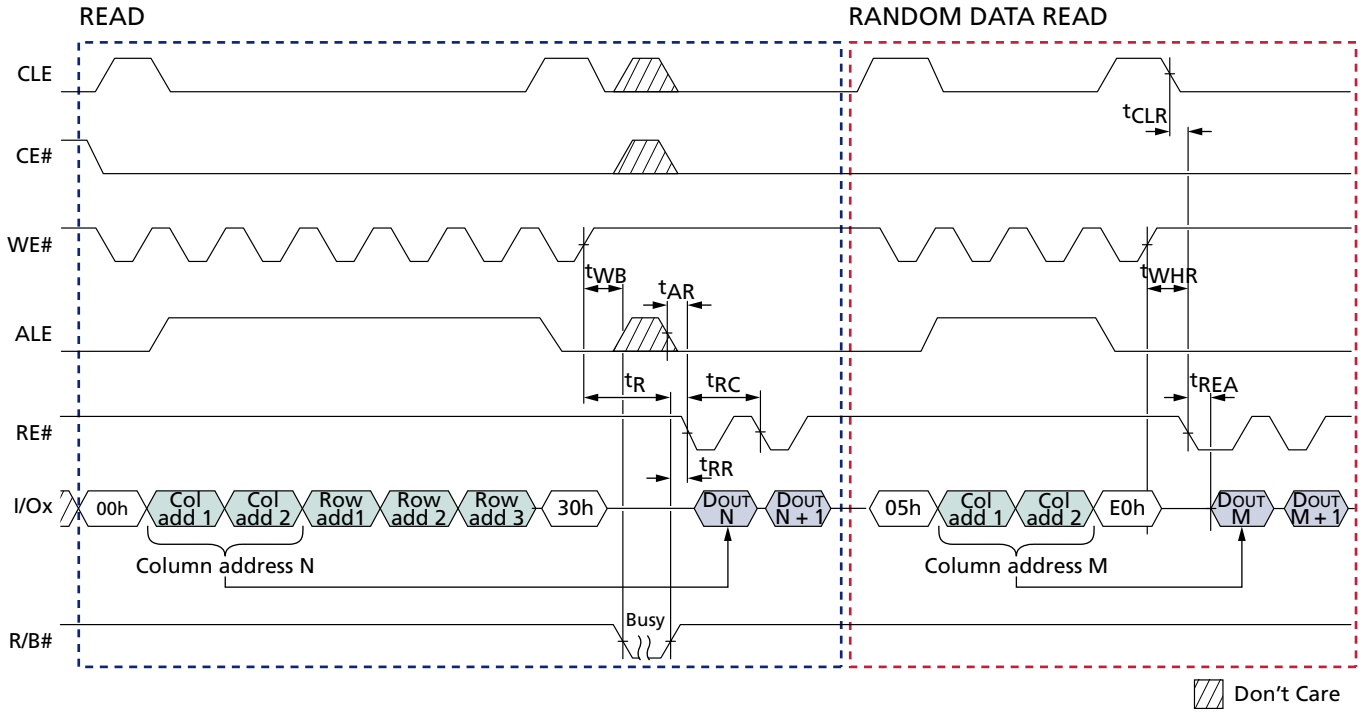

RANDOM DATA READ Operation

The user can directly access random data by issuing the 05h command, two address cycles, and an E0h confirmation cycle (see Figure 12). When the page has been read from the array, this command provides rapid access to the data.

Micron Technology, Inc., reserves the right to change products or specifications without notice.
©2006 Micron Technology, Inc. All rights reserved.

PAGE READ CACHE MODE Command

For ease of discussion, only one register in the NAND Flash device has been discussed to this point. The NAND Flash device actually has two registers, a data register and a cache register, as shown in Figure 13. The attributes of these two registers play an important role in the various NAND Flash caching modes.

The PAGE READ CACHE MODE command allows the user to pipeline the next sequential access from the array while outputting the previously accessed data. This double-buffered technique makes it possible to hide the READ transfer time (^{t}R). Data is initially transferred from the NAND Flash array to the data register. If the cache register is available (not busy), the data is quickly moved from the data register to the cache register. After the data has been transferred to the cache register, the data register is available and can start to load the next sequential page from the NAND Flash array.

Using the PAGE READ CACHE MODE command delivers a 33 percent performance improvement over a traditional PAGE READ command on an 8-bit I/O device, with throughput up to 31 MB/s. On 16-bit I/O devices, throughput can be increased to 37 MB/s—delivering as much as a 40 percent performance improvement over normal PAGE READ operations. See Figure 14 on page 19 for comparison.

Technical notes at www.micron.com/products/nand/technotes provide additional details on cache modes and how they can be used to improve performance. PAGE READ CACHE MODE can be especially useful during system boot-up, when large amounts of data are typically read from the NAND Flash device and start-up time is critical.

Figure 13: Page Read Cache Mode

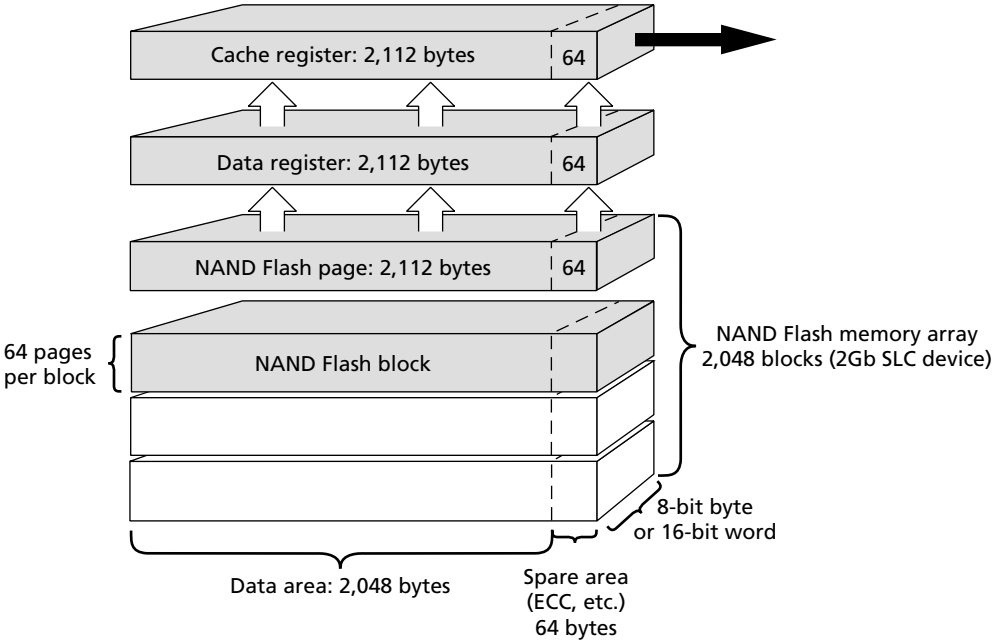

Micron Technology, Inc., reserves the right to change products or specifications without notice.
©2006 Micron Technology, Inc. All rights reserved.

Figure 14: Page Read Cache Mode Timing

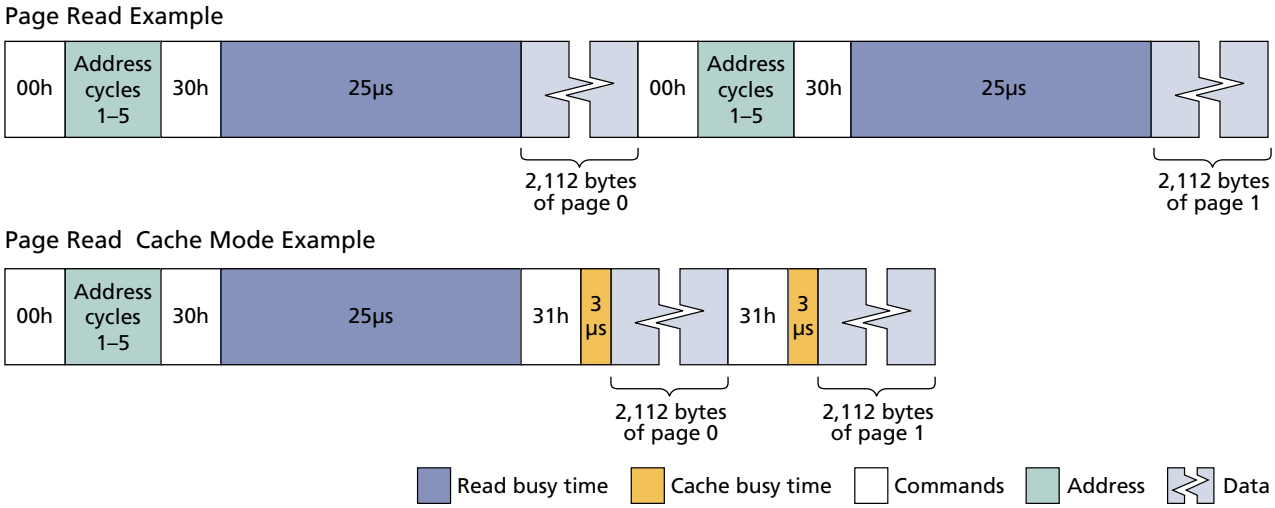

Micron Technology, Inc., reserves the right to change products or specifications without notice.
©2006 Micron Technology, Inc. All rights reserved.

PROGRAM PAGE CACHE MODE Command

PROGRAM PAGE CACHE MODE provides a performance improvement over normal PROGRAM PAGE operations (see Figures 15 and 16). PROGRAM PAGE CACHE MODE is a double-buffered technique that enables the controller to input data directly to the cache register and uses the data register as a holding area to supply data for programming the array. This frees the cache register so that the next sequential page operation can be loaded in parallel. In many applications, the programming time (^{t}PROG) can be completely hidden. As with the PAGE READ CACHE MODE command, the data register is used to maintain the data throughput during the entire programming cycle. This frees the cache register to receive the next page of data from the controller.

Figure 15: Program Page Cache Mode

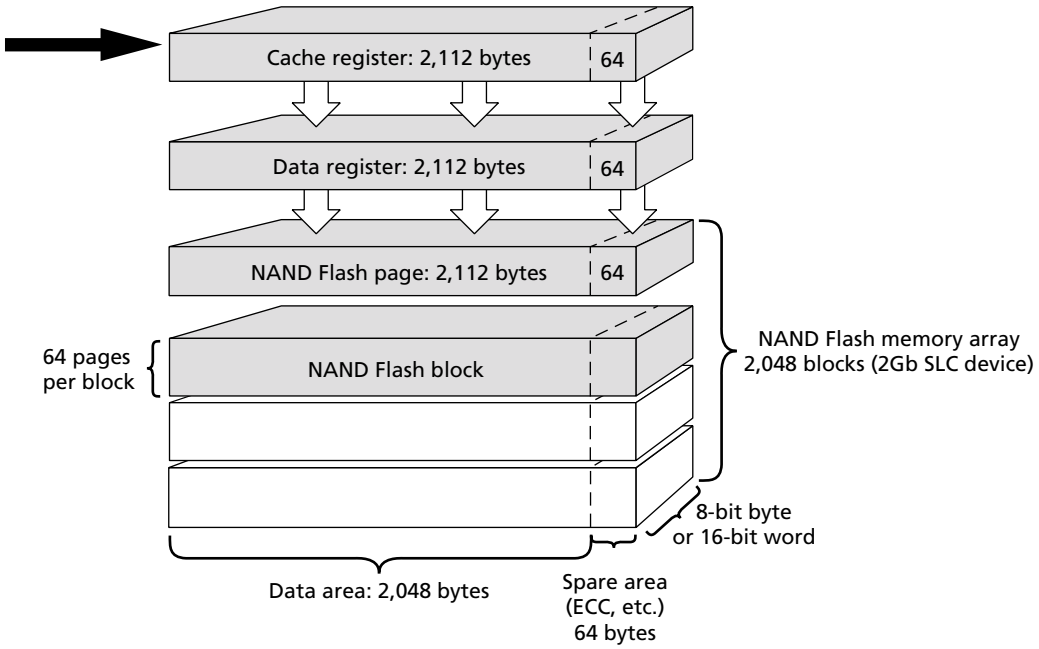

Micron Technology, Inc., reserves the right to change products or specifications without notice.
©2006 Micron Technology, Inc. All rights reserved.

Figure 16: Program Page Cache Mode Timing

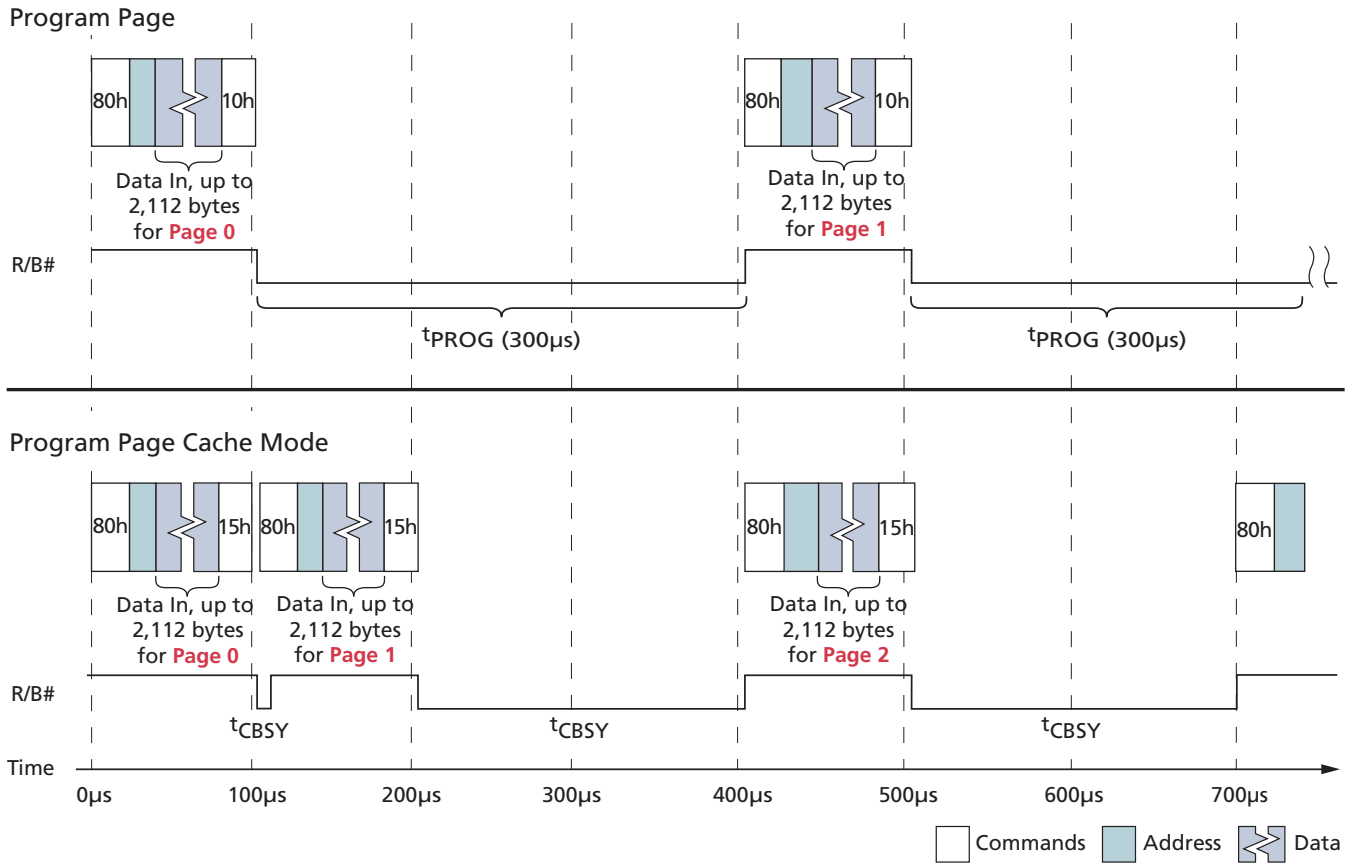

READ FOR INTERNAL DATA MOVE Command

READ FOR INTERNAL DATA MOVE (00h–35h), or "copy back," is another command that is useful at the system level.

It provides the ability to move data internally from one page to another—the data never leaves the NAND Flash device. The READ FOR INTERNAL DATA MOVE operation transfers the data read from the NAND Flash array to the cache register. The data can then be programmed into another page of the device. This is extremely beneficial in cases where the controller needs to move data out of a block before erasing the block. It is also possible to modify the data read before the PROGRAM operation is started. This is useful if the user wants to change the data prior to programming. This feature enables data movement within the NAND Flash device without tying up the processor or the I/O bus.

Micron Technology, Inc., reserves the right to change products or specifications without notice.
©2006 Micron Technology, Inc. All rights reserved.

Connecting NAND Flash to a RISC or DSP Processor

There are significant advantages to selecting a processor or a controller with a built-in NAND Flash interface. When this is not an option, it is possible to design a glueless interface between the NAND Flash device and almost any processor.

To review, the primary difference between NAND Flash and NOR Flash is the multiplexed bus used for transferring command, address, and data in the NAND Flash device. Using the CLE and ALE control signals, it is possible to select a command, address, or data cycle. CLE is used to specify command cycles; ALE is used to specify address cycles.

Connecting ALE to address bit 5 of the processor and CLE to address bit 4 of the processor enables the selection of command, address, or data simply by changing the address that the processor outputs (see Table 9); CLE and ALE are automatically asserted at the appropriate time.

Table 9: Enabling Command, Address, or Data Selection

A7	A6	A5	A4	A3	A2	A1	A0

A5	A4		
ALE	CLE	Memory address offset	NAND register selected
0	0	0xh	Data register
0	1	1xh	Command register
1	0	2xh	Address register
1	1	3xh	Undefined (do not use)

To issue a command, the processor outputs the intended command on the data bus and at output address 0010h.

To issue any number of address cycles, the processor simply outputs the intended NAND Flash address sequence to processor address 0020h. With this technique, the user can access commands, addresses, and data directly from the processor without any glue logic. In this scenario, ECC must be handled in the software. Figures 17–19, starting on page 23, show the block diagram, low-level pseudo-code, and timing for PROGRAM operations. Many processors have the ability to specify several timing parameters around the processor's write signal, which is critical for proper setup and hold timing.

Micron Technology, Inc., reserves the right to change products or specifications without notice.
©2006 Micron Technology, Inc. All rights reserved.

Figure 17: Glueless NAND Interconnect

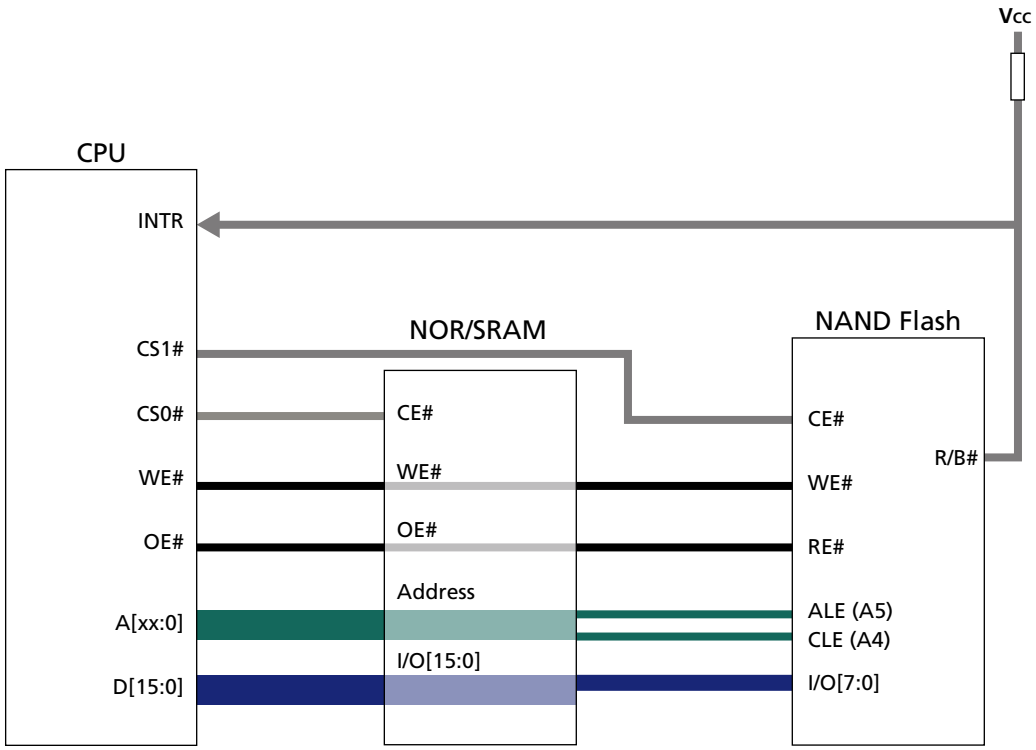

Figure 18: Low-Level Pseudo-Code Example for PROGRAM Operations

```
(All numbers in HEX)
80 ->    FFF010; CMD = 80
ColL ->  FFF020; low column
ColH ->  FFF020; high column
RowL ->  FFF020; low ROW
RowM ->  FFF020; Mid ROW
RowH ->  FFF020; High ROW
D0 ->    FFF000; Data 0
D1 ->    FFF000; Data 1

(Complete remaining data)

D2111 -> FFF000 ; Data 2111
10 ->    FFF010 ; CMD = 10

LOOP1:
PA ->    Acc; Read status
BIT #6 set;
JMP NZ LOOP1; Jmp if Busy to Loop

; DONE !
```


Micron Technology, Inc., reserves the right to change products or specifications without notice.
©2006 Micron Technology, Inc. All rights reserved.

Figure 19: PROGRAM Operation Timing

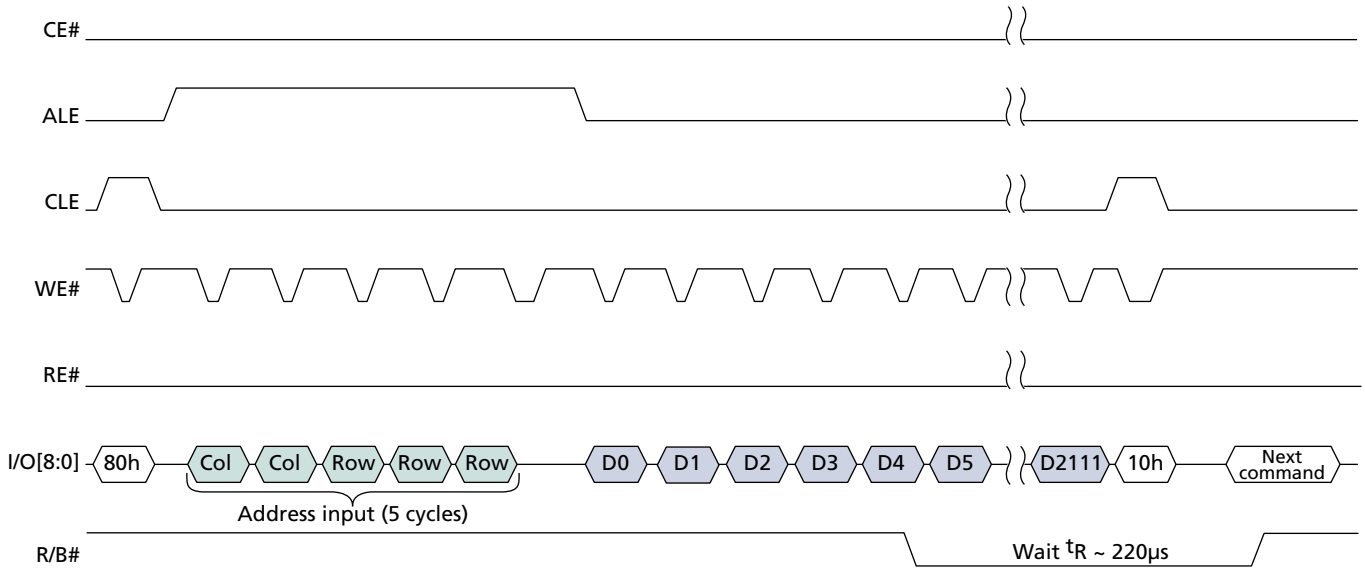

Processors with a native on-chip NAND Flash controller include the Freescale™ i.MX21 and i.MX31 processors and several OMAP™ processors from Texas Instruments. Figure 20 shows the built-in NAND Flash interface on the Freescale i.MX21 processor. The NAND Flash interface is on the right side of the diagram and is connected directly to the NAND Flash. This implementation supports automatic booting from the NAND Flash device, as well as the ECC logic and SRAM buffer. The SRAM port enables code execution directly from the buffer.

Figure 20: Built-in NAND Flash Interface on Freescale i.MX21 Processor

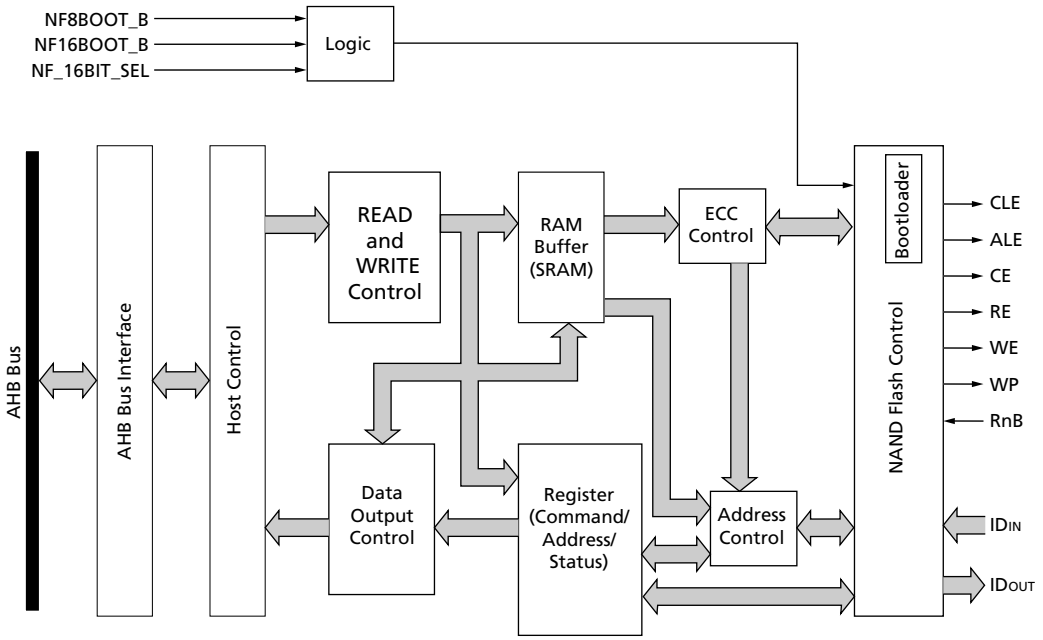

Note: Image courtesy of Freescale Semiconductor, Inc.

Micron Technology, Inc., reserves the right to change products or specifications without notice.
©2006 Micron Technology, Inc. All rights reserved.

Multi-Level Cell (MLC)

MLC devices use a special type of cell that stores 2 bits per cell, compared with traditional single-level cell (SLC) devices, which can store only 1 bit per cell. MLC technology offers obvious density advantages. However, MLC lacks the speed and reliability of its SLC counterpart (see Table 10). For this reason, SLC devices are used in the majority of high-performance media-card and wireless-processor applications; MLC devices are typically used in consumer and other low-cost products.

Table 10: MLC vs. SLC

Symbol		MLC NAND 3.3V (x16/x8)			SLC NAND 3.3V (x16/x8)			Units
		Min	Typ	Max	Min	Typ	Max	
^{t}PROG	Time to transfer contents of data register to the NAND Flash array	–	600	1,200	–	300	700	µs
NOP	Number of partial-page programs allowed on a page before ERASE is required	–	1	1	–	–	8	Cycles
^{t}R	Time to transfer contents of one page in the NAND Flash array to the data register	50	–	50	25	–	25	µs
Endurance with ECC and invalid block marking		10K	–	–	100K	–	–	PROGRAM/ ERASE cycles
MIN ECC required		4	–	–	1	–	–	Correctable bits per 512 bytes
N_{VB}	4Gb MLC, 4Gb SLC	3,936	–	4,096	4,016	–	4,096	Blocks

Error Correction Code (ECC)

As mentioned previously, NAND Flash requires ECC to ensure data integrity. ECC has been used for many years in RAM modules as well as in many other types of storage. ECC can be used in any device that may be susceptible to data errors. NAND Flash memory includes a 64-byte spare area for extra storage on each page (16 bytes per 512-byte sector). This spare area can be used to store the ECC code as well as other software information, such as wear-leveling or logical-to-physical block-mapping information. ECC can be performed in hardware or software; however, hardware implementation provides a performance advantage.

During a programming operation, the ECC unit calculates the ECC code based on the data stored in the sector. The ECC code for the data area is then written to the corresponding spare area. When the data is read out, the ECC code is also read out, and the reverse operation is applied to check that the data is correct. It is possible for the ECC algorithm to correct data errors. The number of data errors that can be corrected depends on the correction strength of the algorithm used. The inclusion of ECC in hardware or software provides a robust solution at the system level.

Simple Hamming codes provide the easiest hardware implementation; they can correct only single-bit errors. Reed-Solomon codes can provide more robust error correction capability and are used in many controllers on the market today. BCH codes are also becoming popular due to their improved efficiency over Reed-Solomon codes.

Table 11 on page 26 shows the number of bits required for various ECC correction strengths.

Micron Technology, Inc., reserves the right to change products or specifications without notice.
©2006 Micron Technology, Inc. All rights reserved.

Table 11: Number of Bits Required for Various ECC Correction Strengths

Error Correction Level	Bits Required in the NAND Flash Spare Area		
	Hamming	Reed-Solomon	BCH
1	13	18	13
2	N/A	36	26
3	N/A	54	39
4	N/A	72	52
5	N/A	90	65
6	N/A	108	78
7	N/A	126	91
8	N/A	144	104
9	N/A	162	117
10	N/A	180	130

Note: Codes in shaded table cells can fit in the spare area.

Software

Software is necessary to perform block management in a NAND Flash device. This software manages wear-leveling and logical-to-physical mapping. The software may also provide the ECC code if the processor does not include ECC hardware.

It is important to read the status register after a PROGRAM or ERASE operation to confirm successful completion of the operation. If an operation is not successful, the block should be marked bad and no longer used. Previously programmed data should be moved out of the bad block into a new, good block.

The specification for a 2Gb SLC NAND Flash device states that it might have up to 40 bad blocks. This maximum number applies to the life of the device (nominally 100,000 PROGRAM/ERASE cycles). Due mostly to their large die size, NAND Flash devices may ship from the factory with a number of bad blocks. The software managing the NAND Flash device maps the bad blocks and replaces them with good blocks. The factory marks these blocks in a specific way so the software can scan all the blocks to determine which are good and which are bad.

The bad-block mark is placed at the first location in the spare area (column location 2,048). If location 2,048 in either page 0 or page 1 is “non-FF,” then the block must be considered bad and mapped out of the system. The initialization software can simply scan through all blocks to determine which blocks are bad and then build a table of these bad blocks for future reference.

The user *must* take special care not to erase the bad-block marks. The factory tests each NAND Flash device over a wide range of temperatures and voltages. Some blocks that are marked bad by the factory may be functional at certain temperatures or voltages but could fail in the future. If the bad-block information is erased, it cannot be recovered.

Micron Technology, Inc., reserves the right to change products or specifications without notice.
©2006 Micron Technology, Inc. All rights reserved.

Third-Party Software

There are several third-party software offerings on the market today. Many of these packages provide multiple features, including automatic power failure-recovery, PC-file compatibility, ECC, bad-block management, directory support, and wear-leveling. A partial list of third-party NAND Flash software vendors includes:

- Datalight, Inc. – www.datalight.com
- CMX Systems, Inc. – www. cmx.com
- HCC-Embedded – www.hcc-embedded.com
- Blunk Microsystems – www.blunkmicro.com

For Linux implementations, another alternative is Journaling Flash File System, version 2 (JFFS2).

Summary

Micron NAND Flash provides the power, density, and cost advantages essential for embedded systems in high-performance applications.

As demand grows in the three major markets—digital camera media cards, USB flash drives, and MP3 players—NAND Flash will continue to claim additional market share, providing the higher densities, lower costs, and added functionality to support these sophisticated designs.

8000 S. Federal Way, P.O. Box 6, Boise, ID 83707-0006, Tel: 208-368-3900
prodmktg@micron.com www.micron.com Customer Comment Line: 800-932-4992
Micron, the M logo, and the Micron logo are trademarks of Micron Technology, Inc.
All other trademarks are the property of their respective owners.

Micron Technology, Inc., reserves the right to change products or specifications without notice.
©2006 Micron Technology, Inc. All rights reserved.

Revision History

Rev. A 11/06

- Initial release.

Micron Technology, Inc., reserves the right to change products or specifications without notice.
©2006 Micron Technology, Inc. All rights reserved.