US009135190B1

(12) **United States Patent**
Bruce et al.

(10) **Patent No.: US 9,135,190 B1**
(45) **Date of Patent: Sep. 15, 2015**

(54) **MULTI-PROFILE MEMORY CONTROLLER FOR COMPUTING DEVICES**

(75) Inventors: **Ricardo H. Bruce**, Union City, CA (US); **Marlon B. Verdan**, Paranaque (PH); **Margaret Anne N. Somera**, Caloocan (PH); **Rowenah Michelle D. Jago-on**, Pasig (PH); **Maria Eliza B. De Belen**, Quezon (PH); **Ron Kelvin B. Palacol**, Laguna (PH)

(73) Assignee: **BiTMICRO Networks, Inc.**, Fremont, CA (US)

(*) Notice: Subject to any disclaimer, the term of this patent is extended or adjusted under 35 U.S.C. 154(b) by 277 days.

(21) Appl. No.: **12/876,113**

(22) Filed: **Sep. 4, 2010**

Related U.S. Application Data

(60) Provisional application No. 61/239,794, filed on Sep. 4, 2009.

(51) **Int. Cl.**

G06F 12/00	(2006.01)
G06F 13/16	(2006.01)
G06F 12/02	(2006.01)

(52) **U.S. Cl.**
CPC ***G06F 13/16*** (2013.01); ***G06F 12/02*** (2013.01); *G06F 12/0246* (2013.01)

(58) **Field of Classification Search**
CPC G06F 11/1451; G06F 11/2064; G06F 11/2082; G06F 12/00; G06F 12/12; G06F 12/08; G06F 12/122; G06F 12/02; G06F 12/10; G06F 12/0238; G06F 17/30215; G06F 17/30578; G06F 2201/84
See application file for complete search history.

(56) **References Cited**

U.S. PATENT DOCUMENTS

4,752,871	A	6/1988	Sparks
5,222,046	A	6/1993	Kreifels et al.
5,297,148	A	3/1994	Harari et al.
5,341,339	A	8/1994	Wells
5,371,709	A	12/1994	Fisher et al.
5,379,401	A	1/1995	Robinson et al.
5,388,083	A	2/1995	Assar et al.
5,396,468	A	3/1995	Harari et al.
5,406,529	A	4/1995	Asano
5,432,748	A	7/1995	Hsu et al.
5,448,577	A	9/1995	Wells et al.
5,459,850	A	10/1995	Clay et al.
5,479,638	A	12/1995	Assar et al.

(Continued)

FOREIGN PATENT DOCUMENTS

JP	2005-309847	11/2005
WO	WO 94/06210	3/1994

OTHER PUBLICATIONS

Office Action mailed Oct. 8, 2013 for U.S. Appl. No. 13/890,229.

(Continued)

Primary Examiner — Jared Rutz
Assistant Examiner — Jean Edouard
(74) *Attorney, Agent, or Firm* — Stephen Uriarte

(57) **ABSTRACT**

The present invention pertains to a multi-profile memory controller and devices that use multi-profile memory controllers. More particularly, the present invention pertains to a multi-profile memory controller and related methods and systems that can operate with memory locations, memory devices, or both which are associated with different memory attributes, different attribute qualifiers, or the like, while minimizing or avoiding some or all of the disadvantages of the prior art.

101 Claims, 4 Drawing Sheets

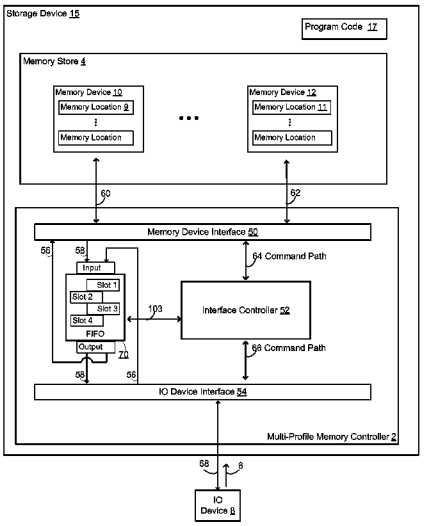

(56) **References Cited**

U.S. PATENT DOCUMENTS

5,485,595	A	1/1996	Assar et al.	
5,488,711	A	1/1996	Hewitt et al.	
5,500,826	A	3/1996	Hsu et al.	
5,509,134	A	4/1996	Fandrich et al.	
5,513,138	A	4/1996	Manabe et al.	
5,524,231	A	6/1996	Brown	
5,530,828	A	6/1996	Kaki et al.	
5,535,328	A	7/1996	Harari et al.	
5,535,356	A	7/1996	Kim et al.	
5,542,082	A	7/1996	Solhjell	
5,548,741	A	8/1996	Watanabe	
5,559,956	A	9/1996	Sukegawa	
5,568,423	A	10/1996	Jou et al.	
5,568,439	A	10/1996	Harari	
5,572,466	A	11/1996	Sukegawa	
5,594,883	A	1/1997	Pricer	
5,602,987	A	2/1997	Harari et al.	
5,603,001	A	2/1997	Sukegawa et al.	
5,606,529	A	2/1997	Honma et al.	
5,606,532	A	2/1997	Lambrache et al.	
5,619,470	A	4/1997	Fukumoto	
5,627,783	A	5/1997	Miyauchi	
5,640,349	A	6/1997	Kakinuma et al.	
5,644,784	A	7/1997	Peek	
5,737,742	A	4/1998	Achiwa et al.	
5,802,554	A	9/1998	Caceres et al.	
5,819,307	A	10/1998	Iwamoto et al.	
5,822,251	A	10/1998	Bruce et al.	
5,875,351	A	2/1999	Riley	
5,881,264	A	3/1999	Kurosawa	
5,913,215	A *	6/1999	Rubinstein et al.	707/708
5,918,033	A	6/1999	Heeb et al.	
5,943,421	A	8/1999	Grabon	
6,000,006	A	12/1999	Bruce et al.	
6,215,875	B1	4/2001	Nohda	
6,230,269	B1	5/2001	Spies et al.	
6,298,071	B1	10/2001	Taylor et al.	
6,363,441	B1	3/2002	Beniz et al.	
6,363,444	B1	3/2002	Platko et al.	
6,404,772	B1	6/2002	Beach et al.	
6,526,506	B1	2/2003	Lewis	
6,529,416	B2	3/2003	Bruce et al.	
6,557,095	B1	4/2003	Henstrom	
6,857,076	B1	2/2005	Klein	
6,901,499	B2	5/2005	Aasheim et al.	
6,961,805	B2 *	11/2005	Lakhani et al.	711/5
6,970,446	B2	11/2005	Krischer et al.	
6,980,795	B1	12/2005	Hermann et al.	
7,103,684	B2	9/2006	Chen et al.	
7,174,438	B2	2/2007	Homma et al.	
7,194,766	B2	3/2007	Noehring et al.	
7,283,629	B2	10/2007	Kaler et al.	
7,305,548	B2	12/2007	Pierce et al.	
7,330,954	B2 *	2/2008	Nangle	711/170
7,372,962	B2	5/2008	Fujimoto et al.	
7,500,063	B2	3/2009	Zohar et al.	
7,620,748	B1	11/2009	Bruce et al.	
7,660,941	B2	2/2010	Lee et al.	
7,716,389	B1	5/2010	Bruce et al.	
7,743,202	B2	6/2010	Tsai et al.	
7,765,359	B2	7/2010	Kang et al.	
7,934,052	B2	4/2011	Prins et al.	
8,200,879	B1 *	6/2012	Falik et al.	710/307
8,375,257	B2	2/2013	Hong et al.	
8,447,908	B2	5/2013	Bruce et al.	
8,510,631	B2	8/2013	Wu et al.	
8,560,804	B2	10/2013	Bruce et al.	
8,707,134	B2	4/2014	Takahashi et al.	
8,713,417	B2	4/2014	Jo	
8,788,725	B2	7/2014	Bruce et al.	
2001/0010066	A1 *	7/2001	Chin et al.	711/108
2002/0073324	A1	6/2002	Hsu et al.	
2002/0083262	A1	6/2002	Fukuzumi	
2002/0141244	A1	10/2002	Bruce et al.	
2003/0163624	A1	8/2003	Matsui et al.	
2003/0182576	A1	9/2003	Morlang et al.	
2003/0204675	A1	10/2003	Dover et al.	
2003/0223585	A1	12/2003	Tardo et al.	
2004/0128553	A1	7/2004	Buer et al.	
2006/0095709	A1 *	5/2006	Achiwa	711/173
2006/0184723	A1 *	8/2006	Sinclair et al.	711/103
2007/0019573	A1	1/2007	Nishimura	
2007/0028040	A1	2/2007	Sinclair	
2007/0083680	A1	4/2007	King et al.	
2007/0130439	A1	6/2007	Andersson et al.	
2007/0174493	A1	7/2007	Irish et al.	
2007/0174506	A1 *	7/2007	Tsuruta	710/22
2007/0195957	A1 *	8/2007	Arulambalam et al.	380/277
2009/0094411	A1 *	4/2009	Que	711/103
2009/0158085	A1 *	6/2009	Kern et al.	714/6
2009/0172250	A1	7/2009	Allen et al.	
2009/0172466	A1	7/2009	Royer et al.	
2011/0113186	A1	5/2011	Bruce et al.	
2011/0161568	A1	6/2011	Bruce et al.	
2011/0167204	A1 *	7/2011	Estakhri et al.	711/103
2011/0202709	A1	8/2011	Rychlik	
2011/0264884	A1	10/2011	Kim	
2013/0246694	A1	9/2013	Bruce et al.	
2014/0104949	A1	4/2014	Bruce et al.	

OTHER PUBLICATIONS

Notice of Allowability (and Examiner's Comment) mailed May 30, 2013 for U.S. Appl. No. 12/882,059.

Notice of Allowability (and Examiner's Comment and Statement of Reasons for Allowance) mailed Feb. 14, 2013 for U.S. Appl. No. 12/882,059.

Office Action mailed May 11, 2012 for U.S. Appl. No. 12/882,059.

Notice of Allowability (and Examiner's Comment and Statement of Reasons for Allowance) mailed Jan. 7, 2013 for U.S. Appl. No. 12/876,247.

Office Action mailed Sep. 14, 2012 for U.S. Appl. No. 12/876,247.

Office Action mailed Feb. 1, 2012 for U.S. Appl. No. 12/876,247.

USPTO Notice of Allowability & attachment(s) mailed Jan. 7, 2013 for U.S. Appl. No. 12/876,247.

Office Action mailed Dec. 18, 2013 for U.S. Appl. No. 12/270,626.

Office Action mailed Mar. 15, 2013 for U.S. Appl. No. 12/270,626.

Office Action mailed Aug. 23, 2012 for U.S. Appl. No. 12/270,626.

Office Action mailed Feb. 3, 2012 for U.S. Appl. No. 12/270,626.

"Security Comes to SNMP: The SNMPv3 Proposed Internet Standards" http://www.cisco.com. vol. 3 No. 3, 8 pages.

Office Action mailed Oct. 5, 2011 for U.S. Appl. No. 12/270,626.

Office Action mailed Apr. 4, 2011 for U.S. Appl. No. 12/270,626.

Office Action for U.S. Appl. No. 13/253,912 mailed on Jul. 16, 2014.

Office Action for U.S. Appl. No. 13/475,878 mailed on Jun. 23, 2014.

Office Action for U.S. Appl. No. 12/876,113 mailed on Jul. 11, 2014.

Office Action for U.S. Appl. No. 12/876,113 mailed on Oct. 16, 2014.

Notice of Allowance for U.S. Appl. No. 12/270,626 mailed Oct. 3, 2014.

Notice of Allowance for U.S. Appl. No. 14/038,684 mailed Nov. 3, 2014.

Notice of Allowance/Allowability for U.S. Appl. No. 14/038,684 for Aug. 1, 2014.

Office Action for U.S. Appl. No. 14/038,684 mailed on Mar. 17, 2014.

Notice of Allowance/Allowability for U.S. Appl. No. 13/890,229 mailed on Feb. 20, 2014.

Office Action for U.S. Appl. No. 12/270,626 mailed on May 23, 2014.

* cited by examiner

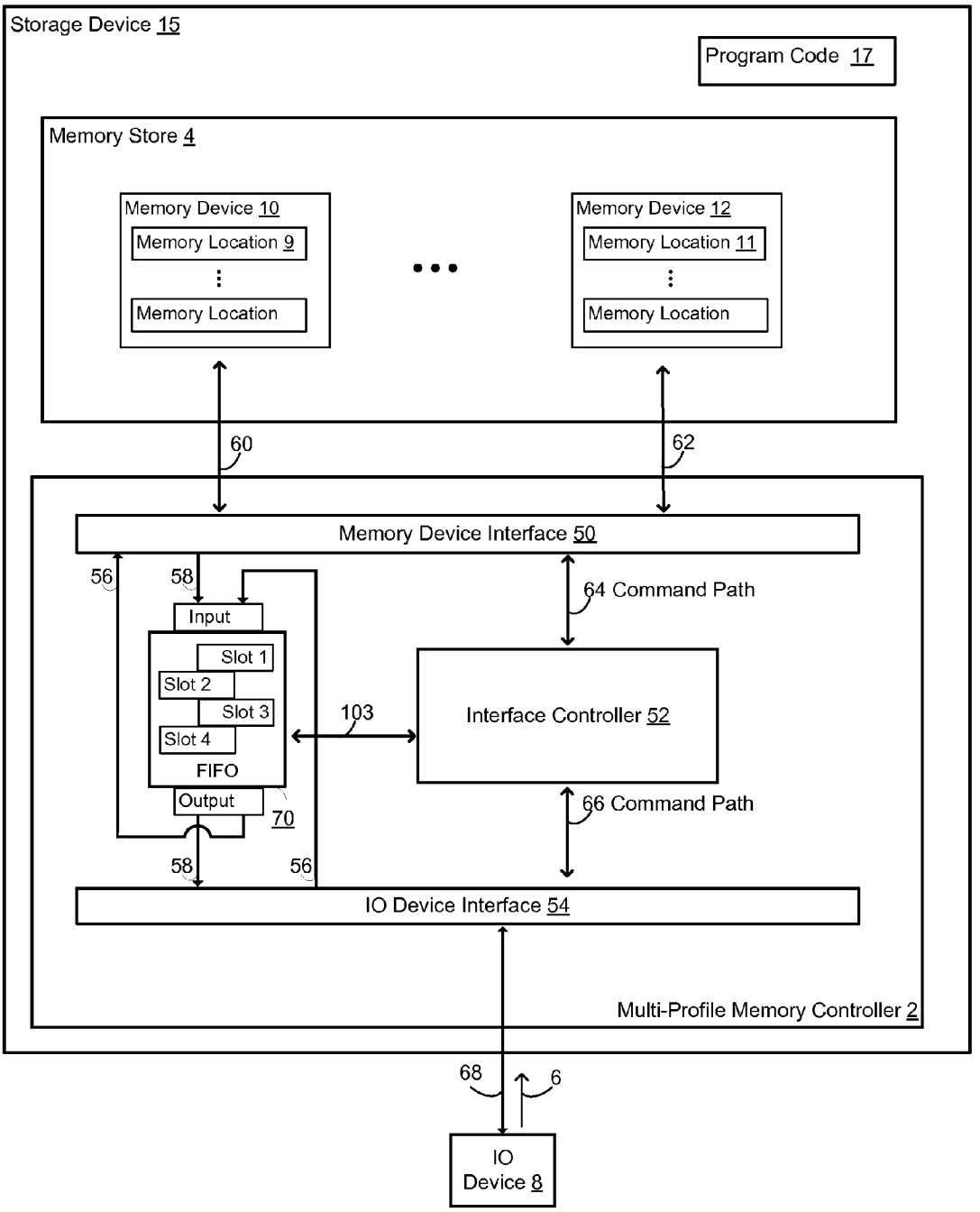
Storage Device 15
Program Code 17
Memory Store 4
Memory Device 10
Memory Location 9
Memory Location
Memory Device 12
Memory Location 11
Memory Location
60
62
Memory Device Interface 50
56
58
64 Command Path
Input
Slot 1
Slot 2
Slot 3
Slot 4
FIFO
Output
70
103
Interface Controller 52
66 Command Path
58
56
IO Device Interface 54
Multi-Profile Memory Controller 2
68
6
IO
Device 8

FIG. 1

24 25 14

Page Size 16	(# of pages)
Block Size 18	(# of blocks)
Memory Protocol 20	(Protocol Type Supported)
Mem. Dev. Type 22	(Mem. Type)
Partial Page Size 23	(# of pages)

FIG. 2A

26

Page Size 28	1024
Block Size 30	2048
Memory Protocol 32	ONFi
Mem. Dev. Type 34	NAND Flash
Partial Page Size 36	512

FIG. 2B

38

Page Size 40	512
Block Size 42	8192
Memory Protocol 44	ONFi
Mem. Dev. Type 46	NAND Flash
Partial Page Size 48	256

FIG. 2C

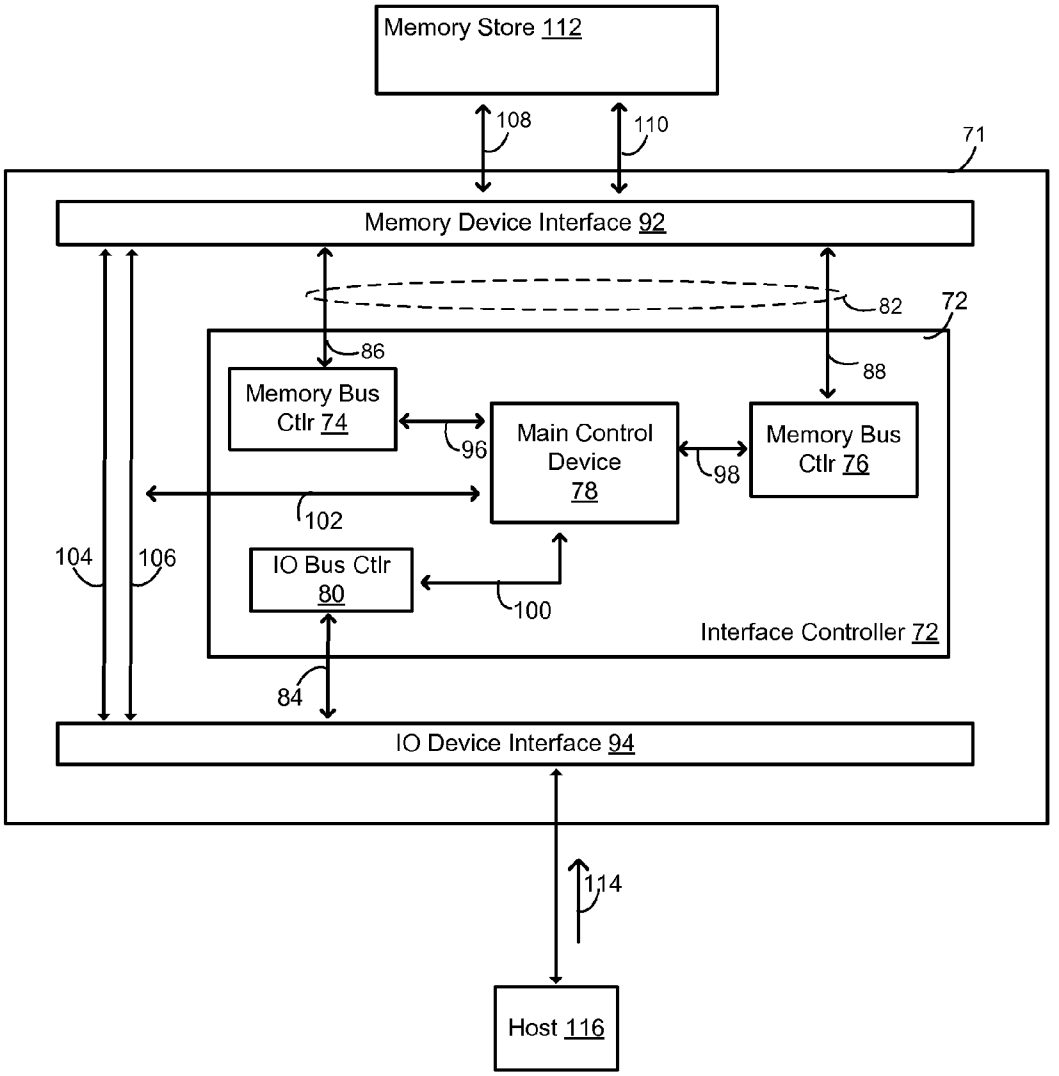
Memory Store 112
108
110
71
Memory Device Interface 92
82
72
86
88
Memory Bus Ctlr 74
96
Main Control Device 78
98
Memory Bus Ctlr 76
102
104
106
IO Bus Ctlr 80
100
Interface Controller 72
84
IO Device Interface 94
114
Host 116

FIG. 3

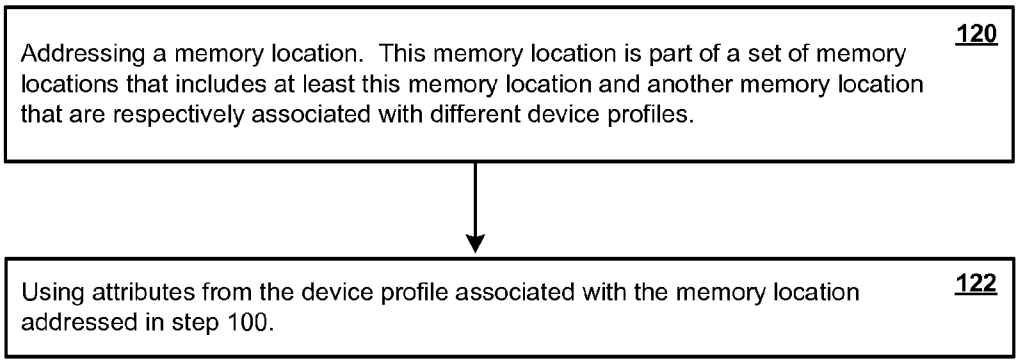

FIG. 4

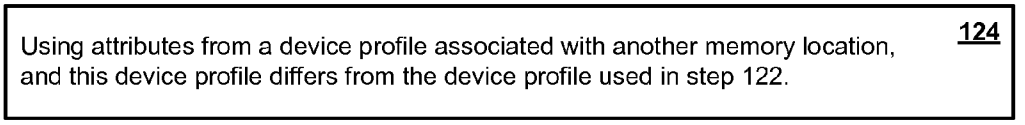

FIG. 5

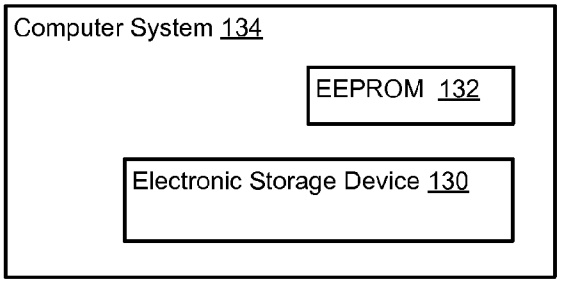

FIG. 6

MULTI-PROFILE MEMORY CONTROLLER FOR COMPUTING DEVICES

CROSS-REFERENCE(S) TO RELATED APPLICATIONS

This application claims the benefit of United States Provisional Application, entitled "Multi-Profile Memory Controller for Computing Devices", filed on 4 Sep. 2009 and having Ser. No. 61/239,794, which is hereby incorporated by reference as if fully set forth herein.

BACKGROUND

(1) Technical Field

The present invention relates to multi-profile memory controllers and computing devices, such as solid-state storage devices, that use these multi-profile memory controllers.

(2) Background Art

Multi-profile memory controllers have been traditionally designed to operate with memory stores or modules that comprise of memory devices which use the same memory device characteristics, such as block size. Some of these multi-profile memory controllers are disposed to operate with memory devices that use flash memory cells which utilize relatively large block sizes, such as 128 Kb or greater. Flash memory devices that have a relatively large block size generally provide better sequential memory access performance than flash memory devices that have a relatively small block size. Larger block sizes are commonly employed because flash memory devices that are disposed with larger block sizes tend to exhibit greater memory density than flash memory devices that use smaller block sizes. In addition, these higher density flash memory devices tend to be generally more cost effective than flash memory devices with less memory density.

A multi-profile memory controller that employs flash memory devices that have relatively large block sizes incurs some disadvantages, however, because it suffers from relatively higher read-modify-write cycle latency, higher random memory access latency and lower random IOPS (input/output operations per second). Consequently, there is a need for a multi-profile memory controller that can operate with memory locations, memory devices, or both that are associated with different memory attributes, different attribute qualifiers, or the like, while minimizing or avoiding some or all of the above described disadvantages.

SUMMARY

The present invention pertains to a multi-profile memory controller and devices that use multi-profile memory controllers. More particularly, the present invention pertains to a multi-profile memory controller and related methods and systems that can operate with memory locations, memory devices, or both which are associated with different memory attributes, different attribute qualifiers, or the like, while minimizing or avoiding some or all of the disadvantages of the prior art.

BRIEF DESCRIPTION OF THE DRAWINGS

FIG. **1** illustrates a multi-profile memory controller, which is disposed to receive and process memory transaction requests from a host, in accordance with one embodiment of the present invention;

FIGS. **2**A-**2**C illustrate device profiles for use with a multi-profile memory controller in accordance with yet another embodiment of the present invention;

FIG. **3** illustrates a multi-profile memory controller in accordance with yet another embodiment of the present invention;

FIG. **4** illustrates a method of performing memory transactions on memory locations that are associated with different device profiles in accordance with yet another embodiment of the present invention;

FIG. **5** illustrates a further embodiment of the method illustrated in FIG. **4**.

FIG. **6** illustrates a block diagram of a computer system that uses an electronic storage device which employs a multi-profile memory controller to perform one or both of the methods disclosed in FIGS. **4** and **5** above in accordance with yet another embodiment of the present invention.

DETAILED DESCRIPTION OF THE INVENTION

In the following detailed description, for purposes of explanation, numerous specific details are set forth to provide a thorough understanding of the various embodiments of the present invention. Those of ordinary skill in the art will realize that these various embodiments of the present invention are illustrative only and are not intended to be limiting in any way. Other embodiments of the present invention will readily suggest themselves to such skilled persons having the benefit of this disclosure.

In addition, for clarity purposes, not all of the routine features of the embodiments described herein are shown or described. It is appreciated that in the development of any such actual implementation, numerous implementation-specific decisions must be made to achieve the developer's specific goals. These specific goals will vary from one implementation to another and from one developer to another. Moreover, it will be appreciated that such a development effort might be complex and time-consuming but would nevertheless be a routine engineering undertaking for those of ordinary skill in the art having the benefit of this disclosure.

The present invention relates to multi-profile memory controllers and computing devices that use these multi-profile memory controllers, such as storage devices, computers, and other types of devices that use memory. More particularly, the present invention relates to a multi-profile memory controller disposed to perform memory transactions using different device profiles. This type of multi-profile memory controller may be referred to herein as a "multi-profile memory controller". In accordance with one embodiment of the present invention, FIG. **1** illustrates a multi-profile memory controller **2** for performing a memory transaction on a memory store **4** in response to receiving a memory transaction request **6**. Memory transaction request **6** may be initiated by an IO device, such as IO device **8**, or other device disposed to initiate such a request. Memory store **4** may be part of a computing device or equivalent device, such as storage device **15**, that includes multi-profile memory controller **2**. In the example shown, multi-profile memory controller **2** executes computer or machine executable instructions, such as program code **17**, which enables multi-profile memory controller **2** to manage, control or both the flow of data between IO device **8** and memory store **4**.

Memory store **4** includes addressable memory locations, such as memory locations **9** and **11**, that are respectively associated with a set of at least one memory attribute. The term "memory attribute", which may also be referred to as "attribute" herein, is defined to include a characteristic of a

memory location that is related to accessing or addressing the memory location. For example, an attribute that is associated with a particular memory location may include the memory device type of a memory device in which the memory location is located or addressable, or of a memory device associated with a memory space in which the memory location is subset. In FIG. **1**, memory locations **9** and **11** are located or addressable in memory devices **10** and **12**, respectively. Other examples of an attribute of a memory location may include, where applicable, the block size used by the memory device, the page size used by the memory device, the memory protocol or specification supported by the memory device, and the partial page size used by the memory device.

In one embodiment of the present invention, each set of memory attributes may be organized into a device profile. Each attribute kept in a device profile is associated with data, named "attribute qualifier," that qualifies the attribute, such as an attribute value or attribute type. The association between an attribute and its corresponding attribute qualifier may be accomplished by using any known means, such as by using a database, a table, index, or an equivalent device, that is accessible to multi-profile memory controller **2**. For example, device profile **14** in FIG. **2**A may be used to represent at least one attribute **24** of a memory location, and each attribute respectively corresponds to an attribute qualifier **25**. These attributes include a page size **16**, a block size **18**, a memory protocol **20** supported by the memory device in which the memory location is addressable, a memory device type **22**, and a partial page size **23**. Attribute qualifier **25** is in the form of a value or type. In FIG. **2**A, attribute page size **16** corresponds to an attribute value in bytes per page, attribute block size **18** corresponds to an attribute value in pages per block, attribute memory protocol **20** corresponds to a memory device specification or protocol supported by the memory device associated with the memory location, attribute memory device type **22** corresponds to a memory device type of the memory device associated with the memory location, attribute partial page size **23** corresponds to an attribute value in bytes per partial page.

Referring to FIGS. **1** and **2**B for example, memory location **9** in memory store **4** may have a device profile **26** that includes the following attributes: a page size **28** associated with an attribute value of 1024 bytes, a block size **30** associated with an attribute value of 2048 pages, a memory protocol **32** associated with an attribute type that represents the ONFi specification, a memory device type **34** associated with an attribute type that represents a NAND flash memory device, and a partial page size **36** associated with an attribute value of 512 bytes. In another example as shown in FIG. **2**C, memory location **11** in memory store **4** may have a device profile **38** that includes the following attributes: a page size **40** associated with an attribute value of 512 bytes, a block size **42** associated with an attribute value of 8192 pages, a memory protocol **44** associated with an attribute type that represents the ONFi protocol, a memory device type **46** associated with an attribute type that represents a NAND flash memory device, and a partial page size **48** associated with an attribute value of 256 bytes.

A device profile may have any number of attributes, while any two device profiles may have any number of shared attributes equal to or greater than zero. Multi-profile memory controller **2** can perform memory transactions using different device profiles. In this example, memory locations **9** and **11** have different device profiles. Memory locations that are addressable from the same memory device may share the same device profile although this approach is not intended to be limiting in any way. In another embodiment, different device profiles may be respectively associated with different memory locations that are addressable from the same memory device but which have different attributes, shared attributes having different attribute qualifiers, or both. Device profiles are different if they differ by attribute, by number of attributes, by attribute qualifier for shared attributes, or any combination of these. Shared attributes include at least two attributes that are the same. In FIGS. **2**B and **2**C, device profiles **26** and **38** have the following shared attributes: a page size, block size, memory device type, memory protocol, and partial page size. In the example shown, device profiles **26** and **38** neither differ by their number of attributes nor by their attributes but differ by attribute qualifier for their sets of shared attributes. Specifically, page sizes **28** and **40**; block sizes **30** and **42**, and partial page sizes **36** and **48** differ by their attribute values, while memory protocols **32** and **44**, and memory device types **34** and **46** differ by their attribute types. In another embodiment (not shown), device profiles **26** and **38** may have the same attributes but at least one set of shared attributes differs by an attribute qualifier, such an attribute value or attribute type. In yet another embodiment (not shown) device profiles **26** and **38** have a different number of attributes. These alternative embodiments are not intended to be exhaustive but are provide to illustrate the variety in which device profiles may differ.

The type and location of a memory device or memory store used to store device profiles are not intended to limit the scope of the invention in any way. In the example shown in FIG. **1**, the device profiles **26** and **38** for memory locations **9** and **11** are stored in memory store **4**. In an alternative embodiment, device profiles **26** and **38** may be stored in another type of non-volatile memory, such as an EPROM, battery-backed volatile memory, or their respective equivalent, which is not shown to avoid overcomplicating this disclosure. The term "memory device" refers to any type of memory device that can write to or read data from an addressable location in response to a memory device command, such as a read or write command. For example, memory devices **10** and **12** may be each disposed to be in the form of a NAND flash memory device integrated circuit, sometimes referred to as a flash chip. Using a NAND flash memory device is not intended to be limiting in any way, and any form of non-volatile memory, such as a NOR flash memory device, may be used. A NAND flash memory device includes a set of addressable non-volatile memory cells, named flash blocks, and each memory cell may be single or multi-level.

A flash memory device permits memory operations, such as a write or read operation, to be performed on these flash blocks according to a protocol supported by the flash memory device. Memory device **10** and **12** may each be implemented using a NAND flash memory device that complies with the Open NAND Flash Interface Specification, commonly referred to as ONFI Specification. The term "ONFI Specification" is a known device interface standard created by a consortium of technology companies, called the "ONFI Workgroup". The ONFI Workgroup develops open standards for NAND flash memory devices and for devices that communicate with these NAND flash memory devices. The ONFI Workgroup is headquartered in Hillsboro, Oreg. Using a flash memory device that complies with the ONFI Specification is not intended to limit the embodiment disclosed. One of ordinary skill in the art having the benefit of this disclosure would readily recognize that other types of flash memory devices employing different device interface protocols may be used, such as protocols compatible with the standards created through the Non-Volatile Memory Host Controller Interface ("NVMHCI") working group. Members of the NVMHCI

working group include Intel Corporation of Santa Clara, Calif., Dell Inc. of Round Rock, Tex. and Microsoft Corporation of Redmond, Wash.

Memory store **4** is not intended to be limited to flash memory devices, and may include other types of memory devices, such as volatile memory like SRAM or DRAM; non-volatile memory, such as a NOR flash memory device or battery-backed volatile memory; a hard disk drive; and the like. The term "IO device" is intended to cover a broad range of devices that can request a memory transaction, such as a read or write transaction. For example, a computing system or computing-enabled device that is configured to include the function of requesting a memory transaction from memory store **4** is an IO device for purposes of this disclosure. An IO device may or may not have the capability to map data that is subject to a memory transaction request in a memory map table. This data may include a file or data portions of the file. IO memory mapping and memory tables are known and thus, are not further described herein. An IO device may also be referred to herein as a "host".

In FIG. **1**, multi-profile memory controller **2** may be configured to include a memory device interface **50**, an interface controller **52** and an IO device interface **54**. Communication path **64** couples memory device interface **50** with interface controller **52**, while communication path **66** couples interface controller **52** with IO device interface **54**, which enables these coupled devices to assert or transmit signals across their respective communication paths. Interface controller **52** and memory device interface **50** communicate through communication bus **64**. Communication through communication path **64** includes interface controller **52** sending information, such as command details, to memory device interface **50** and receiving status from memory device interface **50**. In addition, interface controller **52** communicates with IO device interface **54** though communication path **66**. Communication through communication path **66** includes interface controller **52** receiving status and request information from IO device interface **54** and sending commands to IO device interface **54**. Communication paths **64** and **66** may be implemented in the form of a bus that includes control or command lines. A set of control or command lines are sometimes generically referred to as a control bus or a command line bus, respectively.

Data Paths **56** & **58**

At least one data path, such as data paths **56** and **58**, are used to couple IO device interface **54** with memory device interface **50**, enabling these devices to transfer data, such as data that will be read from or written to memory store **4**, with each other. In one embodiment of the present invention, data paths **56** and **58** may be implemented logically by using a single FIFO buffer **70**, named "FIFO". FIFO **70** includes a set of queue slots and may be used to provide more than one logical data path by associating certain queue slots as a particular data path. For example, all odd numbered queue slots in FIFO **70** may be designated as one data path, such as data path **56**, while all even numbered queue slots in FIFO **70** another data path, such as data path **58**. Interface controller **52** is also coupled to FIFO **70** to provide FIFO status to memory device interface **50** and IO device interface **54**. When implemented in this manner, FIFO **70** functions as a logical form of data paths **56** and **58** because although a single instance of FIFO is used, it provides two logical data paths through which data may be transferred between memory device interface **50** and IO device interface **54**. In another embodiment of the present invention, data paths **56** and **58** may each be implemented separately in the form of a FIFO, respectively. Each FIFO (not shown) may be used to queue data transferred between memory device interface **50** and IO device interface **54** with interface controller providing FIFO status to memory device interface **50** and IO device interface **54**.

Data paths **56** and **58**, whether implemented logically or physically, may be used as bi-directional or unidirectional data paths. When used as a bi-directional data path, data may travel in both directions. For example, bi-directional data path **56**, data path **58** or both may be used to transfer both read and write data. When used as a one way data path, data may travels only in one direction on a particular data path. For example, data path **56** may be used solely to transfer data from IO device interface **54** to memory device interface **50**, while data path **58** may be used solely to transfer data from memory device interface **50** to IO device interface **54**. FIG. **1** illustrates an embodiment of multi-profile memory controller **2** that uses FIFO **70** configured to provide unidirectional data paths **56** and **58** in logical form.

Memory Buses **60** & **62**

Memory device interface **50** is coupled to memory store **4** through at least one bus, such as buses **60** and **62**. Buses **60** and **62** are shown respectively coupled to memory devices **10** and **12**. The number of memory buses used to couple multi-profile memory controller **2** to memory devices associated with memory store **4** is not intended to be limiting. More than one memory device may be coupled to memory device interface **50**. The means and method of selecting a memory device or addressing a memory location from a set of memory devices by using a single memory bus are known. For example, select lines (not shown) may be used. In addition, the number of data buses or FIFOs used is also not intended to be limiting. As would be evident to one of ordinary skill having the benefit of this disclosure, using more than one data bus, FIFO, or both, increases the available pathways through which data may be transmitted between IO device interface **54** and memory device interface **50**.

Memory device interface **50** operates as the communication interface between memory store **4** and devices that form part of multi-profile memory controller **2**, such as interface controller **52** and IO device interface **54**. Memory device interface **50** monitors the availability of a memory device that has been targeted for a memory device operation, and routes commands and data between multi-profile memory controller **2** and the memory device, such as memory device **10** or **12**. Memory device interface **50** also provides the required physical signaling, such as by asserting electrical signals on memory bus **60**, memory bus **62**, or both, that will enable memory device interface **50** to use the memory bus to transfer commands and data associated with the memory device operation.

Memory Device Interface **50**

Memory device interface **50** is responsive to commands received from interface controller **52** via a suitable communication path or bus, such as communication path **64**, which enables interface controller **52** to perform a memory transaction operation, such as a read or write memory operation on a selected memory device, such as memory device **10** or **12**. Data associated with this read or write memory operation is transferred between memory device interface **50** and IO device interface **54** via at least one data path, such as data path **56**, data path **58** or both. In the examples shown in FIGS. **1** and **2B-2C**, memory device interface **50** supports the ONFi memory protocol, which renders it compatible with memory device **10** and **12** since they are NAND flash memory devices that support the ONFi memory protocol.

IO Device Interface **54**

IO device interface **54** operates as the communication interface between an IO device, such as IO device **8**, and devices that form part of multi-profile memory controller **2**,

such as memory device interface **50** and interface controller **52**. IO device interface **54** enables multi-profile memory controller **2** and IO device **8** to communicate with each other through a protocol supported by both devices, enabling multi-profile memory controller **2** to receive a memory transaction request **6** that was sent by IO device **8** through a suitable communication pathway, such as communication bus **66**. The type of protocol used is not intended to be limiting in any way although this protocol should be supported by IO device interface **54** and any IO device that is selected to operate with IO device interface **54**. IO device interface **54** also provides the required physical signaling, such as by asserting electrical signals on communication path **68**, that will enable IO device interface **54** to use path **68** when communicating with an IO device, such as by receiving memory transaction request **6**. The number of IO devices through which IO device interface can communicate is not intended to be limiting in any way.

Operation

After receiving memory transaction request **6** from an IO device, IO device interface **54** transfers this request to interface controller **52** through communication path **66**. Interface controller **52** processes memory transaction request **6** by interpreting the memory transaction request and performing a memory transaction on a memory location. Performing a memory transaction includes addressing a memory location that is associated with a device profile, and that is located in or addressable in a memory device. The addressing of this memory location by interface controller **52** may be part of the memory read or write transaction indicated in the memory transaction request. Interpreting memory transaction request **6** includes determining whether the memory transaction pertains to a memory read or a memory write transaction, and identifying an address from the memory transaction request. In the embodiment shown, this identified address is a logical address, and interface controller **52** translates this logical address into a physical address, which points to the memory location, which may also be referred to herein as "target memory location". The manner of translating a logical address to a physical address is also not intended to be limiting in any way. Any method may be used that is commonly known by those of ordinary skill in the art. For example, a logical to physical address memory map that maps each logical address to target memory locations may be used. In addition, more than one physical address may be mapped to a single logical address. In the embodiment shown in FIG. **1**, if multiple physical addresses or target memory locations are mapped to a single logical address, all of these target memory locations are associated with the same device profile although this arrangement is not intended to limit the scope or spirit of the herein invention in any way. Thus, in this particular non-limiting embodiment, for each memory transaction requested, multi-profile memory controller **2** can perform memory operations on more than one memory location. These memory locations are associated with device profiles that are either the same, or at the very least have at least one shared attribute in common that have the same attribute qualifier. For example, these memory locations may have device profiles that have a shared attribute of block size and the same block size attribute value.

Interface controller **52** also determines command details necessary to cause the interpreted memory transaction to be performed by multi-profile memory controller **2** through its components. These command details include the memory device from which the target memory location is addressable by a multi-profile memory controller component, such as memory device interface **50**. This memory device may also be referred to herein as a "target memory device". In one embodiment of the present invention, multi-profile memory controller **2** through interface controller **52** uses a memory map (not shown) that associates memory devices with physical addresses. Multi-profile memory controller **2** also determines the transfer sizes to use when causing a memory transaction to be performed on the target memory device.

After identifying these command details, the multi-profile memory controller obtains attributes from the device profile associated with the target memory location, and determines whether the target memory location is available by causing memory device interface **50** to determine the status of the target memory device and to inform interface controller **52** when this target memory device is ready for a memory operation. When the target memory device is ready, multi-profile memory controller **2** performs the memory transaction by causing memory device interface **50** to perform a memory operation on the target memory location and target memory device. Multi-profile memory controller **2** also causes data to be transferred via at least one suitable bus or communication path, such as data paths **56** and **58**, to the target memory location and the target memory device from IO device interface **54** if the memory transaction request pertains to a memory write transaction, or from the target memory location and the target memory device to IO device interface **54** if the memory transaction request pertains to a memory read transaction.

In FIG. **1** for example, if the logical address translates to a physical address pointing to memory location **9** in memory device **10**, multi-profile memory controller **2** instructs memory device interface **50** to check the status of memory device **10**. When multi-profile memory controller **2** through memory device interface **50** detects that memory device **10** is ready for a memory transaction, multi-profile memory controller **2** through interface controller **52** provides the instructions necessary for causing memory device interface **50** to perform at least one memory operation as required by the memory transaction requested by memory transaction request **6**.

In one embodiment of the present invention, the transfer size selected is a function of the data size of the subject to memory transaction request **6**, and the attributes in a device profile associated with a target memory location. These attributes may include any combination of the following: the page size attribute, the block size attribute, and the partial page size attribute in device profile **26** of memory location **9** although this example is not intended to be limiting in any way. Any transfer size can be selected using any method and more than one transfer size can be used for memory transactions that require multiple transfers arising from more than one memory operation. In addition, for illustration purposes only and in one example embodiment, if the data size is greater than the page size attribute value in device profile **26**, multi-profile memory controller **2** uses a transfer size equal to at least the page size attribute value for each memory operation transfer for the memory transaction requested until the remaining data not yet transferred from a requesting IO device is less than the page size attribute. In this case, multi-profile memory controller **2** can then use a partial page size attribute value for the transfer size of the next memory operation transfer until all of the data has been transferred to memory location **9**. If the data size is greater than the block size attribute value in device profile **24**, multi-profile memory controller **2** uses a transfer size equal to at least the block size attribute value for each memory operation transfer for the memory transaction requested until the remaining data not yet transferred is less than the block size attribute value. If the remaining data not yet transferred reduces to less than the

block size attribute value, multi-profile memory controller **2** then selects a transfer size equal to the page size attribute value if this remaining data has a data size, named "remaining data size", that is at least equal to the page size attribute, or equal to the partial page size attribute value if this remaining data size is less than the page size attribute.

In another example, by using a multi-profile memory controller **2**, which supports memory locations that have different device profiles, a host or IO device, such as IO device **8**, can use a logical address that maps to at least one target memory location that is associated with a device profile that is optimal for the type of data subject to a memory transaction request initiated by IO device **8**, and another target memory location that is associated with another device profile that is optimal for the type of data subject to another memory transaction request initiated by IO device **8**. IO device **8** may use a memory write transaction request that uses a logical address that maps to at least one target memory location that is associated with a device profile that includes a block size attribute value that is the largest available from the other device profiles associated with a set of memory locations available for addressing by multi-profile memory controller **2**. This transaction command detail may be desired if the data subject to the memory transaction request is of a sequential type, and the memory type attribute value also associated with the device profile is a NAND flash memory device.

In yet another example, IO device **8** may use a memory transaction request that uses a logical address that maps to at least one target memory location which is associated with a device profile that includes a block size attribute value that is the smallest available from the other device profiles associated with a set of memory locations available for addressing by multi-profile memory controller **2**. This transaction command detail may be desired if the data subject to the memory transaction request is random nature. In yet another further example, IO device **8** may use a memory transaction request that uses a logical address that maps to at least one target memory location that is associated with a device profile that includes a partial page size attribute value. This transaction command detail may be desired if the data subject to the memory transaction request is random in nature, and if the data size of the data subject to the write transaction is at most equal to the partial page size attribute value. The above examples are not intended to be limiting in any way. For instance, instead of IO device **8**, multi-profile memory controller **2** includes program code or uses a memory map that determines or causes which target memory location is used to support a memory transaction for a particular data type.

Referring now to FIG. **3**, another embodiment of a multi-profile memory controller **71** is illustrated. Multi-profile memory controller **71** includes an interface controller **72** that may be implemented using a set of memory bus controllers, such as memory bus controller **74** and **76**, a main control device **78**, an IO bus controller **80**, communication paths **82** and **84**, and a control path **102**. Communication path **82** includes control paths **86** and **88**, which are used by memory bus controllers **74** and **76** and main control device **78**, respectively, to assert commands and certain information on a memory device interface **92**, such as the physical or actual address of a memory location targeted for a memory transaction, and commands supported by the memory devices, such as commands supported by ONFi compliant memory devices. For instance, a value of 70 h is a request for status from a memory device by a memory bus controller, while 80 h is commands a memory device to write the data asserted on an address line coupled to the memory device. In the embodiment disclosed in FIG. **3**, the commands, information, memory and device status are routed to main control device **78** via control path **86** or **88** and communication path **96** or **98** by memory bus controllers, such as **74** or **76**, respectively, depending on which memory bus controller is associated with the memory device providing the memory device status. Although as further described below, main control device **78** determines whether a target memory location is available, a memory bus controller performs the transfer of this availability status from the target memory location to main control device **78**.

Each memory bus controller is disposed to access memory devices and to load the selected flash profile attributes as part of a memory read or memory write transaction. In accordance with one embodiment of the present invention, the memory devices in memory store **112** are grouped so that each of these memory devices are associated with only one memory bus controller, such as memory bus controller **74** or **76**. Associating each memory device with only one memory bus controller permits simultaneous memory device accesses that equal in number to the memory bus controllers used by interface controller **72**. In FIG. **3**, interface controller **72** includes two (2) memory bus controllers but the number of memory bus controllers is not intended to be limiting in any way, and any number of memory bus controllers may be employed. For instance, (not illustrated), interface controller **72** may be disposed with four (4) memory bus controllers, which permits each of these memory bus controllers to access collectively a maximum of four memory devices simultaneously.

Communication path **84** couples interface controller **72** with IO device interface **94**, enabling main control device **78** to receive status from IO device interface **94** via IO bus controller **80**. Communication paths **96** and **98** enable main control device **78** to communicate with memory bus controllers **74** and **76**, respectively, while communication path **100** enables main control device **78** to communicate with IO bus controller **80**. IO bus controller **80** functions as the controller for IO Device Interface **94**, and enables main control device **78** to receive status and request information from IO device interface **94** and to send commands to IO device interface **94**.

Control path **102** couples main control device **78** with data paths that are used by memory device interface **92** and IO device interface **94** to transfer data between each other, such as bidirectional data paths **104** and **106**. Main control device **78** uses control path **102** to associate data transferred on a bidirectional data path **104** or **106** with commands sent by a particular memory bus controller, such as memory bus controller **74** or **76**. Bidirectional data paths **104** or **106** may be implemented in to have substantially the same form and function as unidirectional data paths **56** and **58** previously discussed with respect to FIG. **1** above. In addition, although FIG. **3** illustrates two bidirectional data paths **104** and **106**, any number of bidirectional data paths may be employed.

Memory buses **108** and **110** couple memory device interface **92** to at least two memory locations, such as memory locations in memory devices (not shown) that form a memory store **112**. These memory buses enable data to be read from or written to a memory device in memory store **112**. The number of memory bus controllers used by interface controller **72** is not intended to be limiting in any way although in the example shown in FIG. **3**, one memory bus controller may be used for each memory bus supported by multi-profile memory controller **71**. Interface controller **72**, communication paths **82** and **84**, memory device interface **92**, IO device interface **94**, and control path **102** have substantially the same functionality as interface controller **52**, communication paths **64** and **66**, control path **103**, and memory buses **60** and **62**, respectively, disclosed above in FIG. **1**.

Main control device **78** functions by receiving status from and by sending commands to memory control bus controllers **74** and **76**, data paths **104** and **106** and IO bus controller **80**. For example, after receiving a memory transaction request **114** from a host **116** through IO device interface **94** via communication path **84**; IO bus controller **80** acknowledges memory transaction request **114** and informs main control device **78** via communication path **100** that a new memory transaction request, such as memory transaction request **114**, has been received. Interface controller **72** via main control device **78** interprets this memory transaction and performs the requested memory transaction. Main control device **78** performs the requested memory transaction by using at least one memory bus controller, such as memory bus controllers **74** or **76**, to address, via memory device interface **92**, a target memory location that is associated with a device profile, and that is located in or addressable in a memory device. The addressing of this memory location may be part of the memory read or write transaction indicated in memory transaction request **114**. Main control device **78** interprets memory transaction request **114** by determining whether the memory transaction involves a memory read or a memory write transaction, and identifies an address from the memory transaction request.

In the embodiment shown, this identified address may be a logical address, which is translated by main control device **78** into a physical address, which points the target memory location. Interface controller **72** via main control device **78** also determines the command details necessary to cause the interpreted memory transaction to be performed by multi-profile memory controller **71** through its components. These command details include the memory device (not shown) in memory store **112** that is addressable by a multi-profile memory controller component, such as memory device interface **92**. Main control device **78** also determines the transfer sizes to use when causing a memory transaction to be performed on the target memory device.

After identifying these command details, multi-profile memory controller **71** through main control device **78** obtains attributes from the device profile associated with the target memory location, and determines whether the target memory location is available by causing memory device interface **92** to determine or monitor the status of the target memory device and to inform main control device **78** via control path **86** or **88** when this target memory device is ready for a memory operation. If memory device interface **92** indicates that this memory device is ready, main control device **78** performs the memory transaction by causing memory device interface **92** via a memory bus controller, such as **74** or **76**, to perform a memory operation on the target memory location and target memory device in memory store **112**. Main control device **78** also causes data to be transferred via at least one suitable bus or communication path, such as data paths **104** and **106**, to the target memory location and the target memory device from IO device interface **94** if the memory transaction request pertains to a memory write transaction, or from the target memory location and the target memory device to IO device interface **94** if the memory transaction request pertains to a memory read transaction. In the example shown, main control device uses a control path **102** to manage data paths **104** and **106**. After memory device interface **92** performs the memory operation on a target memory location, it provides operation status to interface controller **72** via control path **90**. Interface controller **72** via main control device **78**, in response, sends a memory transaction status to IO device interface **94** via IO bus controller **80**, which causes IO device interface **94** to send status to a host.

FIG. **4** illustrates a method of performing memory transactions on memory locations that are associated with different device profiles in accordance with yet another embodiment of the present invention. For example, also shown in FIGS. **1** and **2**B-**2**C, these memory locations may be in the form of memory locations **9** and **11**, while these different device profiles may be in the form of device profiles **26** and **38**. In response to a memory transaction request, such as memory transaction request **6**, a memory location is addressed **120**. The addressing of this memory location may be addressed by a multi-profile memory controller, such as multi-profile memory controller **2**. The addressing of this memory location may be part of a memory transaction indicated in the memory transaction request. The multi-profile memory controller also uses **122** attributes from a device profile associated with the memory location. FIG. **5** illustrates a further embodiment of the method illustrated in FIG. **4**. In response to another memory transaction request, the attributes from a device profile that is associated with another memory location and that is different from the device profile used in step **122** is also used **124** by multi-profile memory controller **2**. For example, the block attribute value in device profile **12** is used by multi-profile memory controller **2** to perform another memory transaction. For example, multi-profile memory controller **2** selects a transfer size that is equal to the block attribute value, and transfers the data subject to the memory transaction request.

The methods shown in FIGS. **4** and **5** may be implemented by using the embodiments described herein, such as the embodiments discussed with respect to FIGS. **1** through **2**C. In addition, these methods may also be saved onto a computer readable medium, such as flash memory, EEPROM memory, USB memory device (such as a USB flash drive or USB memory key), hard disk drive, and the like, which can be read and executed by a machine, such as by an electronic storage device that employs a multi-profile memory controller. For example in FIG. **6**, electronic storage device **130** may be configured to access an EEPROM **132** on which at least one of the above methods is stored in a machine-readable form. In this example, electronic storage device **130** is part of a computer system **134** although this is not intended to be limiting in any way. For example, electronic storage device **130** may be disposed to be function as a stand-alone mass storage device, whether configured as a direct-attached, network-attached storage (NAS), or storage area networking (SAN) device. In addition, the remaining components of computer system **134** is not illustrated to avoid overcomplicating the herein disclosure, and since a computer system that have the capability to access or use an electronic storage device is commonly known by those of ordinary skill in the art.

While the present invention has been described in particular embodiments, it should be appreciated that the present invention should not be construed as limited by such embodiments. Rather, the present invention should be construed according to the claims below.

We claim:

1. A method of performing memory transactions on a set of memory locations that includes a first memory location and a second memory location, the method comprising:

performing a memory transaction comprising addressing a first memory location in a first memory device in a memory store, said first memory location and a second memory location respectively associated with a first device profile and a second device profile, wherein said second memory location is in a second memory device in the memory store, wherein a memory read transaction or a memory write transaction is performed on at least

one of the first memory location or second memory location, wherein data is transferred to the first memory location or second memory location from a host for a memory write transaction, wherein data is transferred from the first memory location or second memory location to the host for a memory read transaction;

wherein said first device profile is optimal for a data type subject to the memory transaction, wherein said data type comprises one of a random data type or a sequential data type;

said performing the memory transaction further comprising identifying command details for causing the memory transaction to be performed, wherein said command details comprising the first memory device;

said first device profile representing a first set of attributes of said first memory location, and said second device profile representing a second set of attributes of said second memory location, and a difference exists between said first and second device profiles;

after identifying the command details, obtaining the first set of attributes;

wherein each attribute in the first set of attributes and second set of attributes is associated with a respective attribute qualifier that qualifies a respective memory location;

wherein the memory store is directly coupled to at least one memory bus and wherein the at least one memory bus is directly coupled to a controller, and wherein the controller performs the memory read transaction and memory write transaction on the memory store;

wherein the host is directly coupled to the controller by a communication path as the controller performs the memory read transaction or memory write transaction;

wherein the first device profile and second device profile are each stored in the memory store; and

using attributes from said first and second device profiles; and

selecting a transfer size for the memory transaction, wherein the transfer size is a function of a data size of the memory transaction and the first set of attributes.

2. The method of claim **1**, wherein said first memory location is located in a first memory device, and said second memory location is located in a second memory device.

3. The method of claim **1**, wherein said difference between said first and second device profiles includes different attributes; and said addressing said first memory location is made in response to a first memory transaction request; and

further including addressing said second memory location.

4. The method of claim **1**, wherein:

said first and second device profiles have at least one set of shared attributes, and said difference between said first and second device profiles includes different attribute qualifiers for said set of shared attributes; and

said using said attributes from said first and second device profiles further includes using said different attribute qualifiers for said shared attributes.

5. The method of claim **1**, wherein said difference includes different attribute qualifiers for at least one set of shared attributes from said first and second device profiles.

6. The method of claim **5**, wherein said different attribute qualifiers include different attribute values.

7. The method of claim **5**, wherein said different attribute qualifiers include different attribute types.

8. The method of claim **5**, wherein said shared attributes include a memory device type attribute.

9. The method of claim **5**, wherein said shared attributes include a block size attribute, and said different attribute qualifiers include different block size values.

10. The method of claim **5**, wherein said shared attributes include a page size attribute and said different attribute qualifiers include different page size values.

11. The method of claim **5**, wherein said shared attributes includes any one of the following memory device attributes: partial page size, page size, block size, memory protocol, and memory device type.

12. The method of claim **1**, wherein said using attributes from said first and second device profile further includes using a first block size attribute from said first set of attributes that differs in attribute value from a second block size attribute from said second set of attributes.

13. The method of claim **1**, wherein said using attributes from said first and second device profile further includes using a first page size attribute from said first set of attributes that differs in value from a second page size attribute from said second set of attributes.

14. The method of claim **1**, wherein said using attributes from said first and second device profile further includes using a first memory device interface attribute from said first set of attributes that differs from a second memory device interface attribute from said second set of attributes.

15. The method of claim **14**, where said first memory device interface attribute corresponds to a flash memory device, and said second memory device interface attribute corresponds to a DRAM device interface.

16. The method of claim **2**, wherein said using attributes from said first and second device profile further includes using a first partial page size attribute from said first set of attributes that differs in value from a second partial page size attribute from said second set of attributes.

17. The method of claim **16**:

said using a first partial page size attribute includes performing a write operation on said first memory device by at least using a transfer size at least equal to a value of said first partial page size attribute; and

further including using said second partial page size attribute by at least performing a write operation on said second memory device that includes using a transfer size at least equal to a value of said second partial page size attribute.

18. The method of claim **8**, wherein said first memory device type attribute corresponds to a volatile memory disposed to receive backup power from a portable power source.

19. The method of claim **8**, wherein said first memory device type attribute corresponds to a NAND flash memory device and said second memory device type attribute corresponds to a NOR flash memory device.

20. The method of claim **2**, further including:

using an address corresponding to a memory location from said first memory device and transferring a first data set, and

using an address corresponding to a memory location from said second memory device and transferring a second data set.

21. The method of claim **20**, wherein:

said first set of attributes includes a first page size attribute, and said first data set includes a first data set size; and

if said first data set size is at most equal to said first page size attribute, said transferring said first data includes using a first transfer size equal to said first data set size.

22. The method of claim 20, wherein:

said second set of attributes includes a second page size attribute, and said second data set includes a second data set size; and

if said second data set size is greater than said second page size attribute, said transferring said second data set includes:

performing a set of write operations on said second memory device that includes using a second transfer size equal to said second page size attribute until a remaining portion of said second data set that has not yet been written to said second device is less than said second page size attribute, and

using a last transfer size equal to said remaining portion if said remaining portion is less than said page size.

23. The method of claim 20, wherein:

said first set of attributes includes a page size attribute and a block size attribute;

said first data set includes a first data set size;

if said first data set has a first data set size greater than said page size attribute, said transferring of said first data set includes:

performing a set of write operations on said first memory device that includes using a second transfer size equal to said page size attribute until a remaining portion of said first data set that has not yet been written to said first device is less than said page size attribute,

using a last transfer size equal to said remaining portion if said remaining portion is less than said page size.

24. The method of claim 1, wherein said using attributes from said first and second device profile further includes:

performing respective write operations on said first and second memory devices by at least using a transfer size at least equal to a partial page size attribute from said first set of attributes and performing at least one write operation on said second memory device by at least using a transfer size at least equal to a partial page size attribute value from said second set of attributes; and

said attribute difference includes different attribute values of said first and second partial page size attributes.

25. The method of claim 1, wherein said using attributes from said first and second device profile further includes performing a write operation that uses a transfer size equal to a page size attribute value that corresponds to a page size attribute of said first memory device.

26. The method of claim 1, wherein said using attributes from said first and second device profile further includes performing a write operation that uses a transfer size equal to a block size attribute value that corresponds to a block size attribute of said first memory device.

27. The method of claim 26, wherein said using attributes from said first and second device profile further includes performing a write operation that uses a transfer size equal to a multiple of said block size attribute value.

28. The method of claim 2, wherein said using attributes from said first and second device profile further includes performing a write operation that uses a transfer size equal to a multiple of said block size attribute value.

29. A non-transitory computer readable medium comprising computer executable instructions adapted to cause a method of performing memory transactions on a first memory location and a second memory location, said method comprising:

performing a memory transaction comprising addressing a first memory location, said first memory location and a second memory location are respectively associated with a first device profile and a second device profile;

wherein said first device profile is optimal for a data type subject to the memory transaction, wherein said data type comprises one of a random data type or a sequential data type;

said performing the memory transaction further comprising identifying command details for causing the memory transaction to be performed, wherein said command details comprising the first memory device;

said first device profile representing a first set of attributes of said first memory device, and said second device profile representing a second set of attributes of said second memory device, and a difference exists between said first and second device profiles;

after identifying the command details, obtaining the first set of attributes; and

using attributes from said first and second device profiles; and

selecting a transfer size for the memory transaction, wherein the transfer size is a function of a data size of the memory transaction and the first set of attributes.

30. The computer readable medium of claim 29, wherein:

said first memory location is part of a memory space associated with a first memory device;

said second memory location is part of a memory space associated with a second memory device; and

said first and second memory devices comprise at least a portion of a memory store.

31. The computer readable medium of claim 29, wherein at least one attribute of said attributes includes a block size and said difference includes a block size value of a first memory device and a block size value of a second memory device.

32. The computer readable medium of claim 30, wherein at least one attribute of said attributes includes a block size and said difference includes a block size value of said first memory device and a block size value of said second memory device.

33. The computer readable medium of claim 29, wherein said first memory location is located in a first memory device and said second memory location is located in a second memory device.

34. The computer readable medium of claim 29, wherein said difference between said first and second device profiles includes different attributes.

35. The computer readable medium of claim 29, wherein said addressing further includes:

said first and second device profiles having at least one set of shared attributes, and said difference between said first and second device profiles includes different attribute qualifiers for said set of shared attributes; and

said using said attributes from said first and second device profiles includes using said different attribute qualifiers for said shared attributes.

36. The computer readable medium of claim 29, wherein said difference includes different attribute qualifiers for at least one set of shared attributes from said first and second device profiles.

37. The computer readable medium of claim 36, wherein said different attribute qualifiers include different attribute values.

38. The computer readable medium of claim 36, wherein said different attribute qualifiers include different attribute types.

39. The computer readable medium of claim 36, wherein said shared attributes include a memory device type attribute.

40. The computer readable medium of claim **36**, wherein said shared attributes include a block size attribute, and said different attribute qualifiers include different block size values.

41. The computer readable medium of claim **36**, wherein said shared attributes include a page size attribute and said different attribute qualifiers include different page size values.

42. The computer readable medium of claim **36**, wherein said shared attributes includes any one of the following memory device attributes: partial page size, page size, block size, memory protocol, and memory device type.

43. The computer readable medium of claim **36**, wherein said shared attributes are memory device type attributes.

44. The computer readable medium of claim **43**, wherein said memory device type attributes each correspond to a non-volatile memory device.

45. A memory controller for performing memory transactions, said memory controller comprising:

means for performing a memory transaction comprising a means for addressing a first memory location, said first memory location and a second memory location are respectively associated with a first device profile and a second device profile;

said means for addressing is directly coupled to the first memory location and second memory location;

wherein said means for addressing includes an interface controller means for processing memory transaction requests;

said means for addressing is directly coupled to a host as said means for addressing addresses the first memory location or second memory location;

wherein said first device profile is optimal for a data type subject to the memory transaction, wherein said data type comprises one of a random data type or a sequential data type;

said performing the memory transaction further comprising identifying command details for causing the memory transaction to be performed, wherein said command details comprising the first memory device;

said first device profile representing a first set of attributes of said first memory location, and said second device profile representing a second set of attributes of said second memory location, and a difference exists between said first and second device profiles;

said means for addressing obtains the first set of attributes after identifying the command details; and

said means for addressing uses attributes from said first and second device profiles and selects a transfer size for the memory transaction, wherein the transfer size is a function of a data size of the memory transaction and the first set of attributes.

46. The memory controller of claim **45**, wherein said first memory location is located in a first memory device and said second memory location is located in a second memory device.

47. The memory controller of claim **46**, wherein said using attributes from said first and second device profile further includes using a first block size attribute from said first set of attributes that differs in attribute value from a second block size attribute from said second set of attributes.

48. The memory controller of claim **46**, wherein:

said first and second device profiles have at least one set of shared attributes, and said difference between said first and second device profiles includes different attribute qualifiers for said set of shared attributes; and

said use of said attributes from said first and second device profiles by said means for addressing includes using said different attribute qualifiers for said shared attributes.

49. The memory controller of claim **46**, wherein said at least one attribute includes a block size and said difference includes a block size value of said first memory device and a block size value of said second memory device.

50. The memory controller of claim **45**, wherein said means for addressing further includes a means for addressing said second memory location.

51. The memory controller of claim **45**, wherein said difference includes different attribute qualifiers for at least one set of shared attributes from said first and second device profiles.

52. The memory controller of claim **51**, wherein said different attribute qualifiers include different attribute values.

53. The memory controller of claim **51**, wherein said different attribute qualifiers include different attribute types.

54. The memory controller of claim **51**, wherein said shared attributes include a memory device type attribute.

55. The memory controller of claim **51**, wherein said shared attributes include a block size attribute, and said different attribute qualifiers include different block size values.

56. The memory controller of claim **51**, wherein said shared attributes include a page size attribute and said different attribute qualifiers include different page size values.

57. The memory controller of claim **51**, wherein said shared attributes includes any one of the following memory device attributes: partial page size, page size, block size, memory protocol, and memory device type.

58. The memory controller of claim **57**, wherein said memory device type attributes each correspond to a non-volatile memory device.

59. A memory controller comprising:

an interface controller coupled to a memory device interface and an input/output (IO) device interface;

a memory store;

wherein the memory device interface is directly coupled to the memory store;

said interface controller disposed to perform a memory transaction by addressing a first memory location in the memory store, said first memory location and a second memory location respectively associated with a first device profile and a second device profile;

wherein said first device profile is optimal for a data type subject to the memory transaction, wherein said data type comprises one of a random data type or a sequential data type;

said interface controller identifies command details for causing the memory transaction to be performed, wherein said command details comprising the first memory device;

said device profile representing a first set of attributes of said first memory location, and said second device profile representing a second set of attributes of said second memory location, and a difference exists between said first and second device profiles;

said interface controller obtaining the first set of attributes after identifying the command details; and

said addressing of said first memory location includes using said attributes from said first device profile; and

said addressing of said first memory location includes selecting a transfer size for the memory transaction, wherein the transfer size is a function of a data size of the memory transaction and the first set of attributes.

60. The memory controller of claim **59**, wherein said interface controller is further disposed to perform another memory

transaction by addressing said second memory location by at least using said attributes from said second device profile.

61. The memory controller of claim **59**, wherein said interface controller includes:

a main control device coupled to said memory device interface and to a data path;

a first memory bus controller coupled to said control device and said memory device interface; and

an IO bus controller coupled to said IO device interface and said control device.

62. The memory controller of claim **61**, wherein said IO bus controller is disposed to respond to a memory transaction request by acknowledging said request and providing status to said main control device.

63. The memory controller of claim **62**, wherein said interface controller interprets command details associated with said memory transaction, coordinates the operation of said memory device interface, and manages the transfer of memory transaction data between said IO device interface and said memory device interface through a data path.

64. The memory controller of claim **59**, further including a buffer comprising a FIFO and a data path that includes a plurality of queue slots, including a first set of queue slots that buffer data from said IO device interface to said memory device interface, a second set of queue slots that buffer data from said memory device interface to said IO device interface.

65. The memory controller of claim **59**, further including a data path that includes a buffer having a plurality of queue slots.

66. The memory controller of claim **65**, wherein said buffer is a FIFO and said data path includes a plurality of queue slots that buffer data from said IO device interface to said memory device interface.

67. The memory controller of claim **66**, further including another data path that includes a second buffer having a plurality of queue slots that buffer data from said memory device interface to said IO device interface.

68. The memory controller of claim **59**, further including a second memory bus controller coupled to a main control device and said memory device interface.

69. The memory controller of claim **59**, wherein said difference between said first and second device profiles includes different attributes.

70. The memory controller of claim **59**, wherein:

said first and second device profiles have at least one set of shared attributes, and said difference between said first and second device profiles includes different attribute qualifiers for said set of shared attributes; and

said using said attributes from said first and second device profiles includes using said different attribute qualifiers for said shared attributes.

71. The memory controller of claim **59**, wherein said difference includes different attribute qualifiers for at least one set of shared attributes from said first and second device profiles.

72. The memory controller of claim **71**, wherein said shared attributes includes a memory device type attribute.

73. The memory controller of claim **71**, wherein said shared attributes includes a block size and said difference includes block size values.

74. The memory controller of claim **71**, wherein said shared attributes includes a page size and said difference includes page size values.

75. The memory controller of claim **71**, wherein said difference includes different attribute values for said shared attributes, said shared attributes including any one of a partial page size, page size, block size, memory protocol, and memory device type.

76. The memory controller of claim **71**, wherein said different attribute qualifiers include different attribute values.

77. The memory controller of claim **71**, wherein said different attribute qualifiers include different attribute types.

78. The memory controller of claim **71**, wherein said shared attributes include a block size attribute, and said different attribute qualifiers include different block size values.

79. The memory controller of claim **71**, wherein said shared attributes include a page size attribute and said different attribute qualifiers include different page size values.

80. An electronic storage device, comprising:

a memory controller directly coupled to and disposed to address a first memory location and a second memory location which are respectively associated with a first device profile and a second device profile;

said memory controller directly coupled to a host as said memory controller addresses the first memory location or second memory location;

wherein said first device profile is optimal for a data type subject to a memory transaction, wherein said data type comprises one of a random data type or a sequential data type;

said memory controller identifies command details for causing the memory transaction to be performed, wherein said command details comprising the first memory device;

said first device profile representing a first set of attributes of said first memory location, and said second device profile representing a second set of attributes of said second memory location, and a difference exists between said first and second device profiles;

said memory controller obtaining the first set of attributes after identifying the command details; and

said memory controller using attributes from said first and second device profiles; and

said memory controller selecting a transfer size for the memory transaction, wherein the transfer size is a function of a data size of the memory transaction and the first set of attributes.

81. The electronic storage device of claim **80**, wherein said memory controller is further disposed to use a first block size attribute from said first set of attributes that differs in attribute value from a second block size attribute from said second set of attributes.

82. The electronic storage device of claim **80**, wherein said first memory location is located in a first memory device and said second memory location is located in a second memory device.

83. The electronic storage device of claim **80**, said memory controller further disposed to:

perform a write operation on said first memory device, if a memory transaction request is associated with a write request;

perform a read operation on said first memory device, if said memory transaction request is associated with a read request; and

wherein said using said first and second device profiles includes using said first device profile in response to a first memory transaction request, and using said second device profile in response to receiving a second memory transaction request.

84. The electronic storage device of claim **80**, wherein said difference includes different attribute qualifiers for at least one set of shared attributes from said first and second device profiles.

85. The electronic storage device of claim **84**, wherein said different attribute qualifiers include different attribute values.

86. The electronic storage device of claim **84**, wherein said shared attributes include a memory device type attribute.

87. The electronic storage device of claim **84**, wherein said different attribute qualifiers include different attribute types.

88. The electronic storage device of claim **87**, wherein said memory controller using different attributes includes using said different attribute qualifiers for said shared attributes.

89. The electronic storage device of claim **87**, wherein said memory device type attributes each correspond to a non-volatile memory device.

90. The electronic storage device of claim **84**, wherein said shared attributes include a block size attribute, and said different attribute qualifiers include different block size values.

91. The electronic storage device of claim **84**, wherein said shared attributes include a page size attribute and said different attribute qualifiers include different page size values.

92. The electronic storage device of claim **84**, wherein said shared attributes includes any one of the following memory device attributes: partial page size, page size, block size, memory protocol, and memory device type.

93. The electronic storage device of claim **80**, wherein said memory controller is further adapted to:

use a first partial page size attribute by performing a write operation on said first memory device and using a transfer size at least equal to said partial page size attribute; and

use a second partial page size attribute by performing a write operation on said second memory device and using a transfer size at least equal to said second partial page size attribute.

94. The method of claim **1**, wherein the first memory location and the second memory location are addressable memory locations.

95. The memory controller of claim **45**, wherein the first memory location and the second memory location are addressable memory locations.

96. The memory controller of claim **59**, wherein the first memory location and the second memory location are addressable memory locations.

97. The electronic device of claim **80**, wherein the first memory location and the second memory location are addressable memory locations.

98. An electronic storage device, comprising: a memory controller directly coupled to and disposed to address a first memory location and a second memory location which are respectively associated with a first device profile and a second device profile;

wherein the memory controller is directly coupled to a host as the memory controller addresses the first memory location or the second memory location;

wherein said first device profile is optimal for a data type subject to a memory transaction, wherein said data type comprises one of a random data type or a sequential data type;

said memory controller identifies command details for causing the memory transaction to be performed, wherein said command details comprising the first memory device;

the first device profile representing a first set of attributes of the first memory location, and the second device profile representing a second set of attributes of the second memory location;

said memory controller obtaining the first set of attributes after identifying the command details; and

wherein said memory controller uses attributes from the first and second device profiles;

wherein said memory controller selecting a transfer size for the memory transaction, wherein the transfer size is a function of a data size of the memory transaction and the first set of attributes.

99. The electronic devices of claim **98**, wherein the memory controller comprises:

an interface controller;

a memory device interface directly coupled to the first memory location and to the second memory location and coupled to the interface controller;

an input/output (IO) device interface coupled to the interface controller and directly coupled to the host as the memory controller addresses the first memory location or the second memory location.

100. A method for performing memory transactions, the method comprising:

performing a memory transaction comprising addressing a first memory location in a first memory device in a memory store, the first memory location and a second memory location respectively associated with a first device profile and a second device profile;

wherein said first device profile is optimal for a data type subject to the memory transaction, wherein said data type comprises one of a random data type or a sequential data type;

said performing the memory transaction further comprising identifying command details for causing the memory transaction to be performed, wherein said command details comprising the first memory device;

the first device profile representing a first set of attributes of the first memory location, and the second device profile representing a second set of attributes of the second memory location;

after identifying the command details, obtaining the first set of attributes;

wherein the memory store is directly coupled to a memory controller, and wherein the memory controller performs a memory transaction;

wherein a host is directly coupled to the memory controller as the memory controller performs the memory transaction; and

using attributes from the first and second device profiles; and

selecting a transfer size for the memory transaction, wherein the transfer size is a function of a data size of the memory transaction and the first set of attributes.

101. The method of claim **100**, wherein the memory controller comprises:

an interface controller;

a memory device interface directly coupled to the first memory location and to the second memory location and coupled to the interface controller;

an input/output (IO) device interface coupled to the interface controller and directly coupled to the host as the memory controller addresses the first memory location or the second memory location.

* * * * *