Open NAND Flash Interface Specification

Revision 2.0
27-February-2008

Hynix Semiconductor

Intel Corporation

Micron Technology, Inc.

Phison Electronics Corp.

Sony Corporation

Spansion

STMicroelectronics

INTEL-1007
9,135,190

This 2.0 revision of the Open NAND Flash Interface specification ("Final Specification") is available for download at www.onfi.org.

SPECIFICATION DISCLAIMER

THIS SPECIFICATION IS PROVIDED TO YOU “AS IS” WITH NO WARRANTIES WHATSOEVER, INCLUDING ANY WARRANTY OF MERCHANTABILITY, NON-INFRINGEMENT, OR FITNESS FOR ANY PARTICULAR PURPOSE. THE AUTHORS OF THIS SPECIFICATION DISCLAIM ALL LIABILITY, INCLUDING LIABILITY FOR INFRINGEMENT OF ANY PROPRIETARY RIGHTS, RELATING TO USE OR IMPLEMNETATION OF INFORMATION IN THIS SPECIFICATION. THE AUTHORS DO NOT WARRANT OR REPRESENT THAT SUCH USE WILL NOT INFRINGE SUCH RIGHTS. THE PROVISION OF THIS SPECIFICATION TO YOU DOES NOT PROVIDE YOU WITH ANY LICENSE, EXPRESS OR IMPLIED, BY ESTOPPEL OR OTHERWISE, TO ANY INTELLECTUAL PROPERTY RIGHTS.

Copyright 2005-2008, Hynix Semiconductor, Intel Corporation, Micron Technology, Inc., Phison Electronics Corp., Sony Corporation, Spansion, STMicroelectronics. All rights reserved.

For more information about ONFI, refer to the ONFI Workgroup website at www.onfi.org.

All product names are trademarks, registered trademarks, or servicemarks of their respective owners.

ONFI Workgroup Technical Editor:

Amber Huffman
Intel Corporation
2111 NE 25th Ave M/S JF2-53
Hillsboro, OR 97124 USA
Tel: (503) 264-7929
Email: amber.huffman@intel.com

Table of Contents

1. Introduction ... 1
1.1. Goals and Objectives ... 1
1.2. References ... 1
1.3. Definitions, abbreviations, and conventions ... 1
1.3.1. Definitions and Abbreviations ... 1
1.3.2. Conventions ... 4
2. Physical Interface ... 7
2.1. TSOP-48 and WSOP-48 Pin Assignments ... 7
2.2. LGA-52 Pad Assignments ... 10
2.3. BGA-63 Ball Assignments ... 11
2.4. BGA-100 Ball Assignments ... 15
2.5. Signal Descriptions ... 19
2.6. CE# Signal Requirements ... 24
2.6.1. Source Synchronous Data Interface Requirements ... 24
2.7. Absolute Maximum DC Ratings ... 24
2.8. Recommended DC Operating Conditions ... 25
2.8.1. I/O Power (VccQ) and I/O Ground (VssQ) ... 25
2.9. AC Overshoot/Undershoot Requirements ... 25
2.10. DC and Operating Characteristics ... 26
2.11. Calculating Pin Capacitance ... 28
2.12. Staggered Power-up ... 28
2.13. Independent Data Buses ... 29
2.14. Bus Width Requirements ... 30
2.15. Ready/Busy (R/B#) Requirements ... 30
2.15.1. Power-On Requirements ... 30
2.15.2. R/B# and SR[6] Relationship ... 31
2.16. Write Protect ... 31
3. Memory Organization ... 32
3.1. Addressing ... 33
3.1.1. Interleaved Addressing ... 34
3.1.2. Logical Unit Selection ... 34
3.1.3. Multiple LUN Operation Restrictions ... 34
3.2. Factory Defect Mapping ... 35
3.2.1. Device Requirements ... 35
3.2.2. Host Requirements ... 35
3.3. Discovery and Initialization ... 36
3.3.1. CE# Discovery ... 36
3.3.2. Target Initialization ... 37
3.4. Partial Page Programming ... 38
3.4.1. Requirements ... 38
3.4.2. Host Discovery ... 38
4. Data Interface and Timing ... 39
4.1. Data Interface Types ... 39
4.1.1. Signal Function Reassignment ... 39
4.1.2. Bus State ... 40
4.1.3. Source Synchronous and Repeat Bytes ... 41
4.1.4. Data Interface / Timing Mode Transitions ... 42
4.2. Timing Parameters ... 43
4.2.1. General Timings ... 43
4.2.2. Asynchronous ... 44
4.2.3. Source Synchronous ... 49
4.3. Timing Diagrams ... 60
4.3.1. Asynchronous ... 60
4.3.2. Source Synchronous ... 67

4.4. Command Examples ... 76
4.4.1. Asynchronous ... 76
4.4.2. Source Synchronous ... 79
5. Command Definition ... 84
5.1. Command Set ... 84
5.2. Command Descriptions ... 86
5.3. Reset Definition ... 89
5.4. Synchronous Reset Definition ... 89
5.5. Read ID Definition ... 90
5.6. Read Parameter Page Definition ... 91
5.6.1. Parameter Page Data Structure Definition ... 94
5.7. Read Unique ID Definition ... 106
5.8. Block Erase Definition ... 108
5.9. Read Status Definition ... 108
5.10. Read Status Enhanced Definition ... 109
5.11. Read Status and Read Status Enhanced required usage ... 109
5.12. Status Field Definition ... 110
5.13. Read Definition ... 111
5.14. Read Cache Definition ... 113
5.15. Page Program Definition ... 117
5.16. Page Cache Program Definition ... 119
5.17. Copyback Definition ... 122
5.18. Change Read Column Definition ... 127
5.19. Change Write Column Definition ... 127
5.20. Set Features Definition ... 128
5.21. Get Features Definition ... 130
5.22. Feature Parameter Definitions ... 130
5.22.1. Timing Mode ... 131
5.22.2. I/O Drive Strength ... 131
6. Interleaved Operations ... 133
6.1. Requirements ... 133
6.2. Status Register Behavior ... 134
6.3. Interleaved Page Program ... 134
6.4. Interleaved Copyback Program ... 137
6.5. Interleaved Block Erase ... 139
7. Behavioral Flows ... 140
7.1. Target behavioral flows ... 140
7.1.1. Variables ... 140
7.1.2. Idle states ... 140
7.1.3. Idle Read states ... 142
7.1.4. Reset command states ... 143
7.1.5. Read ID command states ... 144
7.1.6. Read Parameter Page command states ... 145
7.1.7. Read Unique ID command states ... 147
7.1.8. Page Program and Page Cache Program command states ... 147
7.1.9. Block Erase command states ... 149
7.1.10. Read command states ... 151
7.1.11. Set Features command states ... 153
7.1.12. Get Features command states ... 154
7.1.13. Read Status command states ... 154
7.1.14. Read Status Enhanced command states ... 155
7.2. LUN behavioral flows ... 156
7.2.1. Variables ... 156
7.2.2. Idle command states ... 156
7.2.3. Idle Read states ... 158
7.2.4. Status states ... 158

7.2.5. Reset states 160
7.2.6. Block Erase command states 160
7.2.7. Read command states 162
7.2.8. Page Program and Page Cache Program command states 163
A. Sample Code for CRC-16 (Informative) 167
B. Spare Size Recommendations (Informative) 169

1. Introduction

1.1. Goals and Objectives

This specification defines a standardized NAND Flash device interface that provides the means for a system to be designed that supports a range of NAND Flash devices without direct design pre-association. The solution also provides the means for a system to seamlessly make use of new NAND devices that may not have existed at the time that the system was designed.

Some of the goals and requirements for the specification include:

- Support range of device capabilities and new unforeseen innovation
- Consistent with existing NAND Flash designs providing orderly transition to ONFI
- Capabilities and features are self-described in a parameter page such that hard-coded chip ID tables in the host are not necessary
- Flash devices are interoperable and do not require host changes to support a new Flash device
- Define a higher speed NAND interface that is compatible with existing NAND Flash interface
- Allow for separate core (Vcc) and I/O (VccQ) power rails

1.2. References

This specification is developed in part based on existing common NAND Flash device behaviors, including the behaviors defined in the following datasheets:

- Hynix HY27UF084G2M data sheet available at http://www.hynix.com/datasheet/eng/flash/details/flash_11_HY27UF084G2M.jsp

- Intel SD74 data sheet available at http://download.intel.com/design/flash/NAND/datashts/31277412.pdf

- Micron MT29F4G08AAA data sheet available at http://download.micron.com/pdf/datasheets/flash/nand/4gb_nand_m40a.pdf

- ST NAND04GW3B2B data sheet available at http://www.st.com/stonline/products/literature/ds/12100/nand04gw3b2b.htm

The specification also makes reference to the following specifications and standards:

- ONFI Block Abstracted NAND revision 1.0. Specification is available at http://www.onfi.org.

1.3. Definitions, abbreviations, and conventions

1.3.1. Definitions and Abbreviations

The terminology used in this specification is intended to be self-sufficient and does not rely on overloaded meanings defined in other specifications. Terms with specific meaning not directly clear from the context are clarified in the following sections.

1.3.1.1. address

The address is comprised of a row address and a column address. The row address identifies the page, block, and LUN to be accessed. The column address identifies the byte or word within a page to access. The least significant bit of the column address shall always be zero in the source synchronous data interface.

1.3.1.2. asynchronous

Asynchronous is when data is latched with the WE# signal for writes and RE# signal for reads.

1.3.1.3. block

Consists of multiple pages and is the smallest addressable unit for erase operations.

1.3.1.4. column

The byte (x8 devices) or word (x16 devices) location within the page register.

1.3.1.5. defect area

The defect area is where factory defects are marked by the manufacturer. Refer to section 3.2.

1.3.1.6. device

The packaged NAND unit. A device consists of one or more targets.

1.3.1.7. DDR

Acronym for double data rate.

1.3.1.8. Dword

A Dword is thirty-two (32) bits of data. A Dword may be represented as 32 bits, as two adjacent words, or as four adjacent bytes. When shown as bits the least significant bit is bit 0 and most significant bit is bit 31. The most significant bit is shown on the left. When shown as words the least significant word (lower) is word 0 and the most significant (upper) word is word 1. When shown as bytes the least significant byte is byte 0 and the most significant byte is byte 3. See Figure 1 for a description of the relationship between bytes, words, and Dwords.

1.3.1.9. latching edge

The latching edge describes the edge of the CLK or the DQS signal that the contents of the data bus are latched on for the source synchronous data interface. For data cycles the latching edge is both the rising and falling edges of the DQS signal. For command and address cycles the latching edge is the rising edge of the CLK signal.

1.3.1.10. LUN (logical unit number)

The minimum unit that can independently execute commands and report status. There are one or more LUNs per target.

1.3.1.11. na

na stands for “not applicable”. Fields marked as “na” are not used.

1.3.1.12. O/M

O/M stands for Optional/Mandatory requirement. When the entry is set to “M”, the item is mandatory. When the entry is set to “O”, the item is optional.

1.3.1.13. page

The smallest addressable unit for read and program operations. For targets that support partial page programming, the smallest addressable unit for program operations is a partial page if there are partial programming constraints.

1.3.1.14. page register

Register used to read data from that was transferred from the Flash array. For program operations, the data is placed in this register prior to transferring the data to the Flash array.

1.3.1.15. partial page

The smallest unit that may be written in a program operation if there are partial programming constraints (described in section 5.6.1.23).

1.3.1.16. read request

A read request is a data output cycle request from the host that results in a data transfer from the device to the host. Refer to section 4.1.2 for information on data output cycles.

1.3.1.17. row

Refers to the block and page to be accessed.

1.3.1.18. source synchronous

Source synchronous is when the strobe (DQS) is forwarded with the data to indicate when the data should be latched. The strobe signal, DQS, can be thought of as an additional data bus bit.

1.3.1.19. SR[ ]

SR refers to the status register contained within a particular LUN. SR[x] refers to bit x in the status register for the associated LUN. Refer to section 5.12 for the definition of bit meanings within the status register.

1.3.1.20. target

An independent Flash component with its own CE# signal.

1.3.1.21. word

A word is sixteen (16) bits of data. A word may be represented as 16 bits or as two adjacent bytes. When shown as bits the least significant bit is bit 0 and most significant bit is bit 15. The most significant bit is shown on the left. When shown as bytes the least significant byte (lower) is byte 0 and the most significant byte (upper) is byte 1. See Figure 1 for a description of the relationship between bytes, words and Dwords.

1.3.2. Conventions

The names of abbreviations and acronyms used as signal names are in all uppercase (e.g., CE#). Fields containing only one bit are usually referred to as the "name" bit instead of the "name" field. Numerical fields are unsigned unless otherwise indicated.

1.3.2.1. Precedence

If there is a conflict between text, figures, state machines, timing diagrams, and tables, the precedence shall be state machines and timing diagrams, tables, figures, and then text.

1.3.2.2. Keywords

Several keywords are used to differentiate between different levels of requirements.

1.3.2.2.1. mandatory

A keyword indicating items to be implemented as defined by this specification.

1.3.2.2.2. may

A keyword that indicates flexibility of choice with no implied preference.

1.3.2.2.3. optional

A keyword that describes features that are not required by this specification. However, if any optional feature defined by the specification is implemented, the feature shall be implemented in the way defined by the specification.

1.3.2.2.4. reserved

A keyword indicating reserved bits, bytes, words, fields, and opcode values that are set-aside for future standardization. Their use and interpretation may be specified by future extensions to this or other specifications. A reserved bit, byte, word, or field shall be cleared to zero, or in accordance with a future extension to this specification. The recipient shall not check reserved bits, bytes, words, or fields.

1.3.2.2.5. shall

A keyword indicating a mandatory requirement. Designers are required to implement all such mandatory requirements to ensure interoperability with other products that conform to the specification.

1.3.2.2.6. should

A keyword indicating flexibility of choice with a strongly preferred alternative. Equivalent to the phrase “it is recommended”.

1.3.2.3. Byte, word and Dword Relationships

Figure 1 illustrates the relationship between bytes, words and Dwords.

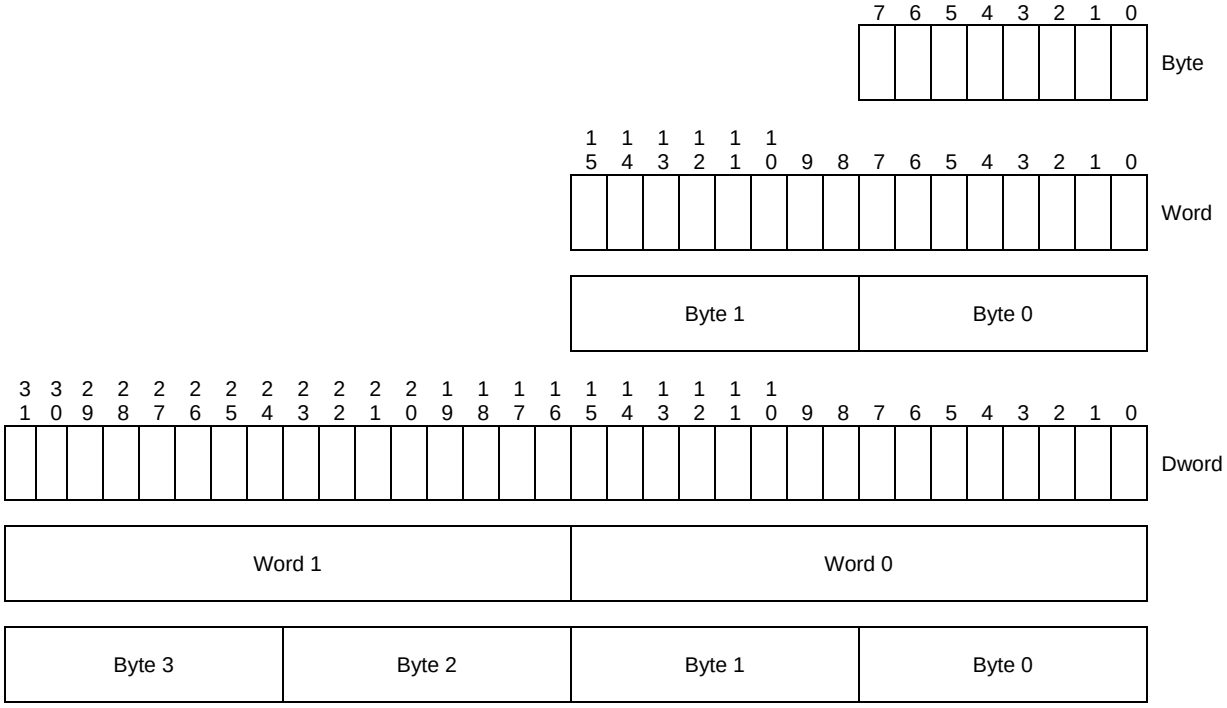

Figure 1 Byte, word and Dword relationships

1.3.2.4. Behavioral Flow Diagrams

For each function to be completed a state machine approach is used to describe the sequence and externally visible behavior requirements. Each function is composed of several states to accomplish a set goal. Each state of the set is described by an individual state table. Table 1 below shows the general layout for each of the state tables that comprise the set of states for the function.

State name	Action list	
Transition condition 0	→	**Next state 0**
Transition condition 1	→	**Next state 1**

Table 1 State Table Cell Description

Each state is identified by a unique state name. The state name is a brief description of the primary action taken during the state. Actions to take while in the state are described in the action list.

Each transition is identified by a transition label and a transition condition. The transition label consists of the state designator of the state from which the transition is being made followed by the state designator of the state to which the transition is being made. The transition condition is a brief description of the event or condition that causes the transition to occur and may include a transition action that is taken when the transition occurs. This action is described fully in the transition description text. Transition conditions are listed in priority order and are not required to be mutually exclusive. The first transition condition that evaluates to be true shall be taken.

Upon entry to a state, all actions to be executed in that state are executed. If a state is re-entered from itself, all actions to be executed in the state are executed again.

It is assumed that all actions are executed within a state and that transitions from state to state are instantaneous.

2. Physical Interface

2.1. TSOP-48 and WSOP-48 Pin Assignments

Figure 2 defines the pin assignments for devices using 48-pin TSOP or 48-pin WSOP packaging for 8-bit data access. Figure 3 defines the pin assignments for devices using 48-pin TSOP or 48-pin WSOP packaging for 16-bit data access. The package with 16-bit data access does not support the source synchronous data interface. The physical dimensions of the TSOP package is defined in the JEDEC document MO-142 variation DD. The physical dimensions of the WSOP package is defined in the JEDEC document MO-259.

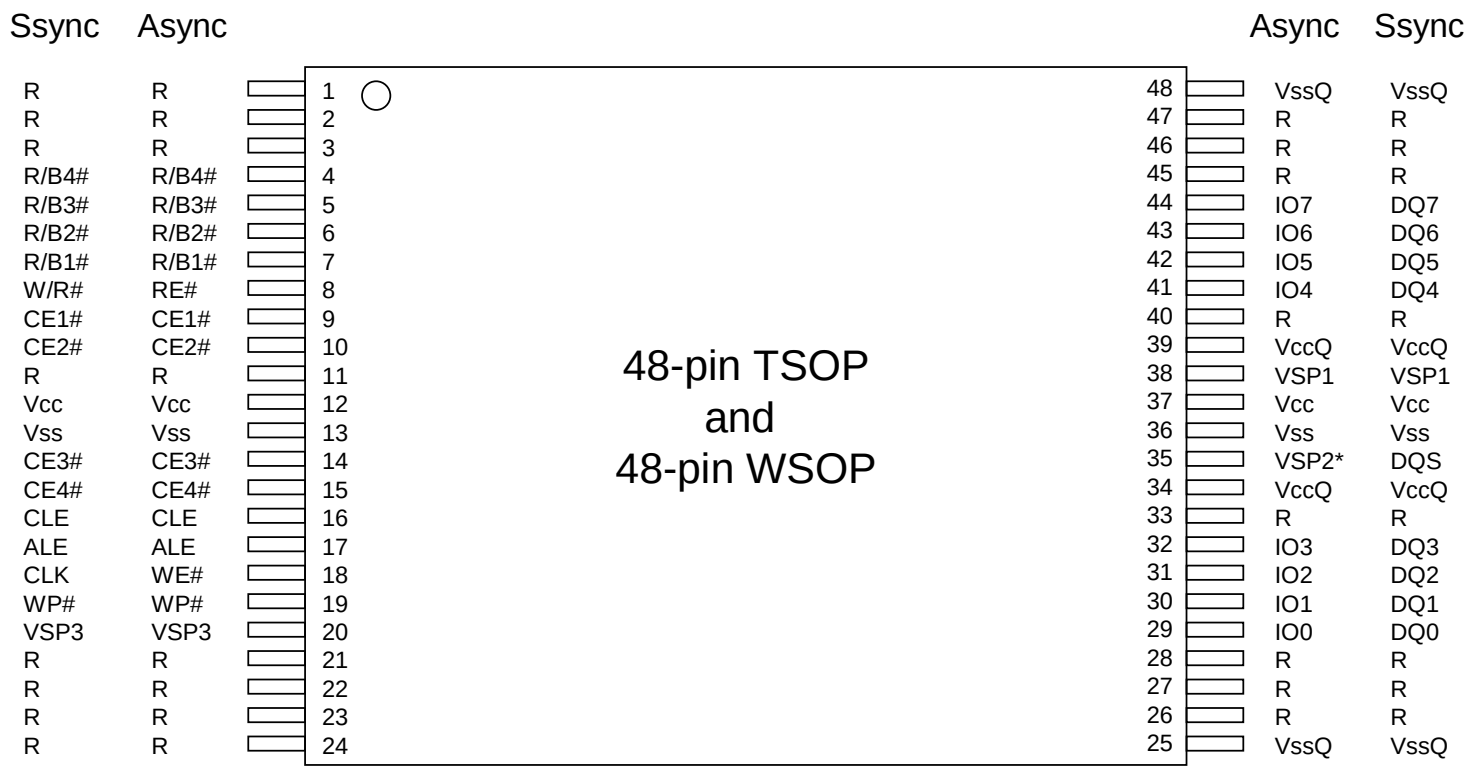

Figure 2 48-pin TSOP/WSOP pinout for 8-bit data access

NOTE: For a source synchronous capable part, pin 35 is not used when configured in the asynchronous data interface. Specifically, VSP2 is present for asynchronous only parts.

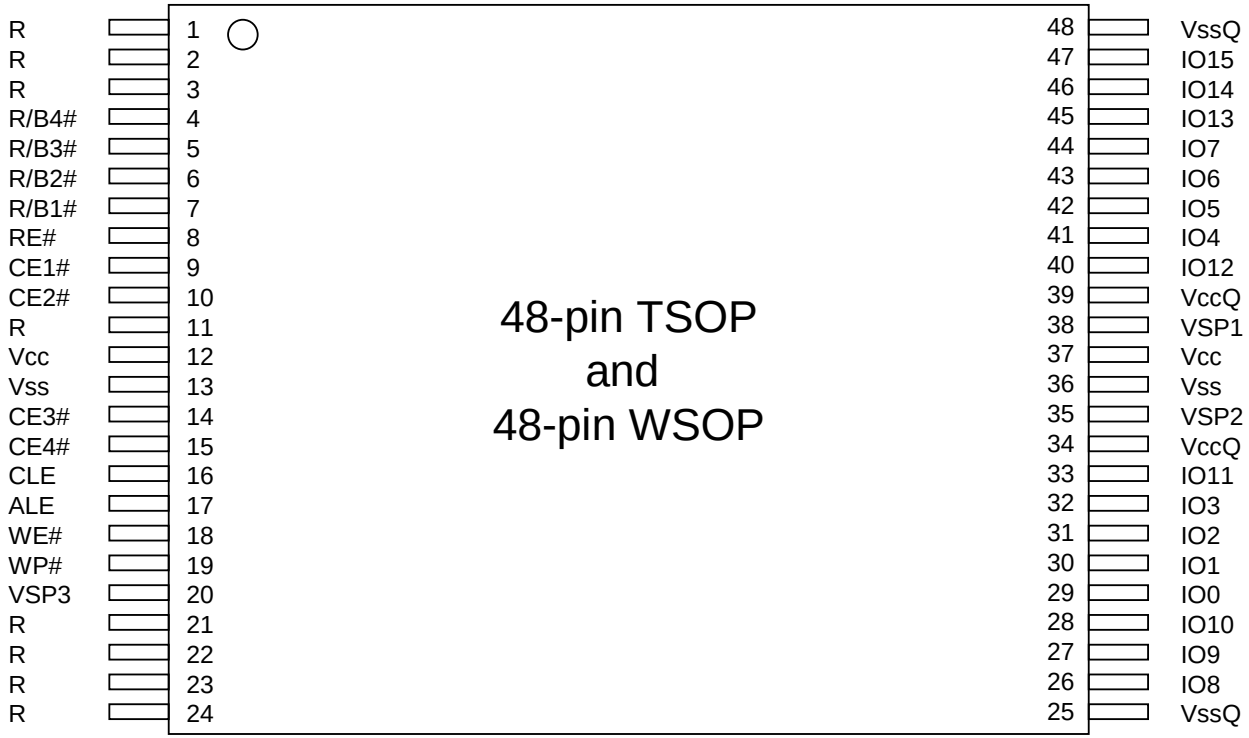

Figure 3 48-pin TSOP/WSOP pinout for 16-bit data access

2.2. LGA-52 Pad Assignments

Figure 4 defines the pad assignments for devices using 52-pad LGA packaging with 8-bit data access. An option is specified for two independent 8-bit data buses. Figure 5 defines the pad assignments for devices using 52-pad LGA packaging with 16-bit data access. The physical dimensions of the package are 12mmx17mm. These LGA packages do not support the source synchronous data interface.

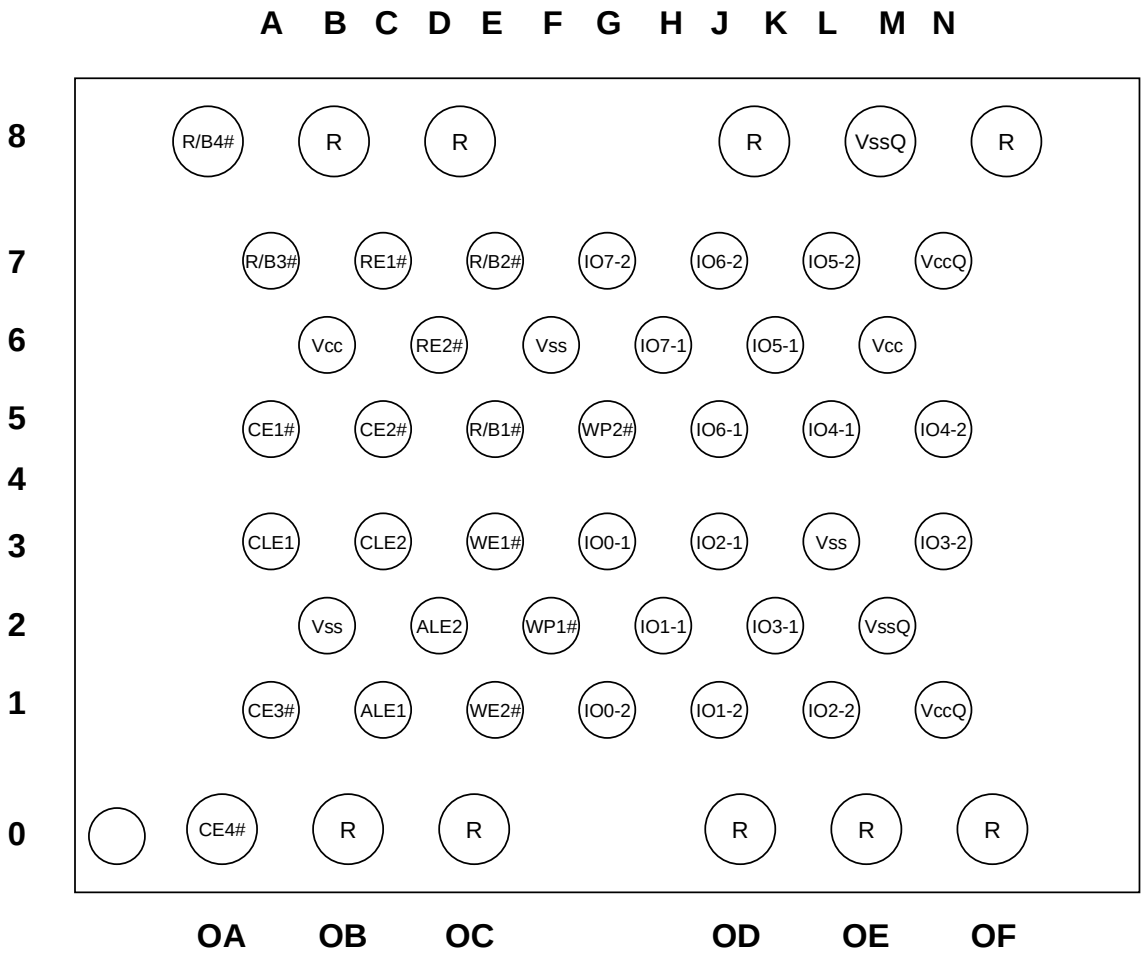

Figure 4 LGA pinout for 8-bit data access

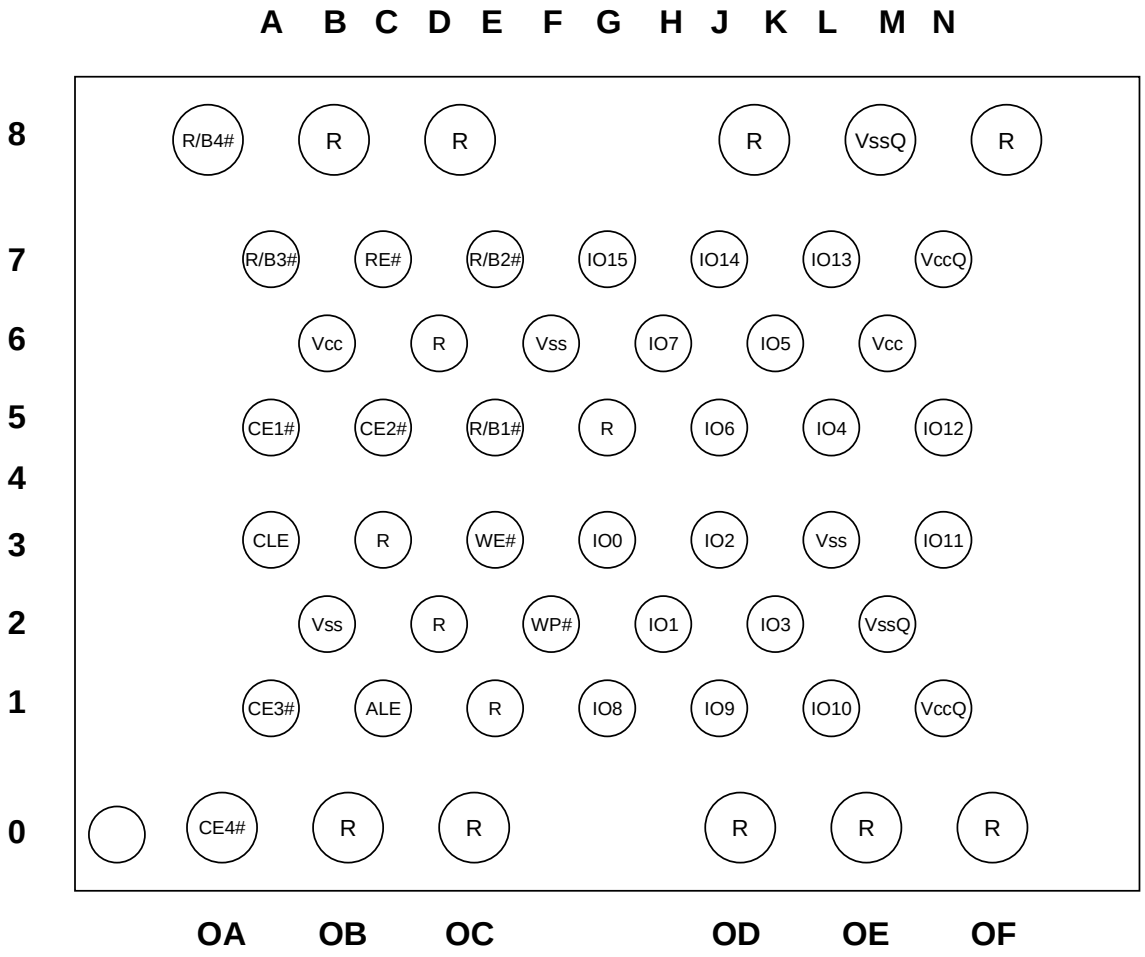

Figure 5 LGA pinout for 16-bit data access

2.3. BGA-63 Ball Assignments

Figure 6 defines the ball assignments for devices using 63-ball BGA packaging with 8-bit data access for the asynchronous data interface. Figure 7 defines the ball assignments for devices using 63-ball BGA packaging with 8-bit data access for the source synchronous data interface. Figure 8 defines the ball assignments for devices using 63-ball BGA packaging with 16-bit data access for the asynchronous data interface. The 63-ball BGA package with 16-bit data access does not support the source synchronous data interface. Figure 9 defines the ball spacing requirements for the 63-ball BGA package. The solder ball diameter is 0.45 mm post reflow.

	1	2	3	4	5	6	7	8	9	10
A	R	R							R	R
B	R								R	R
C			WP#	ALE	VSS	CE#	WE#	R/B#		
D			VCC	RE#	CLE	CE2#	CE3#	R/B2#		
E			R	R	R	R	CE4#	R/B3#		
F			R	R	R	R	VSS	R/B4#		
G			VSP3	VCC	VSP1	R	R	VSP2		
H			R	IO0	R	R	R	VCCQ		
J			R	IO1	R	VCCQ	IO5	IO7		
K			VSSQ	IO2	IO3	IO4	IO6	VSSQ		
L	R	R							R	R
M	R	R							R	R

Figure 6 BGA-63 ball assignments for 8-bit data access, asynchronous only data interface

Note that WE# is located at ball H7 when a source synchronous capable part is used in asynchronous mode.

	1	2	3	4	5	6	7	8	9	10
A	R	R							R	R
B	R								R	R
C			WP#	ALE	VSS	CE#	R	R/B#		
D			VCC	W/R#	CLE	CE2#	CE3#	R/B2#		
E			R	R	R	R	CE4#	R/B3#		
F			R	R	VREFQ	R	VSS	R/B4#		
G			VSP3	VCC	VSP1	R	R	VSP2		
H			R	DQ0	DQS#	CLK#	CLK	VCCQ		
J			R	DQ1	DQS	VCCQ	DQ5	DQ7		
K			VSSQ	DQ2	DQ3	DQ4	DQ6	VSSQ		
L	R	R							R	R
M	R	R							R	R

Figure 7 BGA-63 ball assignments for 8-bit data access, source synchronous data interface

	1	2	3	4	5	6	7	8	9	10
A	R	R							R	R
B	R								R	R
C			WP#	ALE	VSS	CE#	WE#	R/B#		
D			VCC	RE#	CLE	CE2#	CE3#	R/B2#		
E			R	R	R	R	CE4#	R/B3#		
F			R	R	R	R	VSS	R/B4#		
G			VSP3	VCC	VSP1	IO13	IO15	VSP2		
H			IO8	IO0	IO10	IO12	IO14	VCCQ		
J			IO9	IO1	IO11	VCCQ	IO5	IO7		
K			VSSQ	IO2	IO3	IO4	IO6	VSSQ		
L	R	R							R	R
M	R	R							R	R

Figure 8 BGA-63 ball assignments for 16-bit, asynchronous only data access

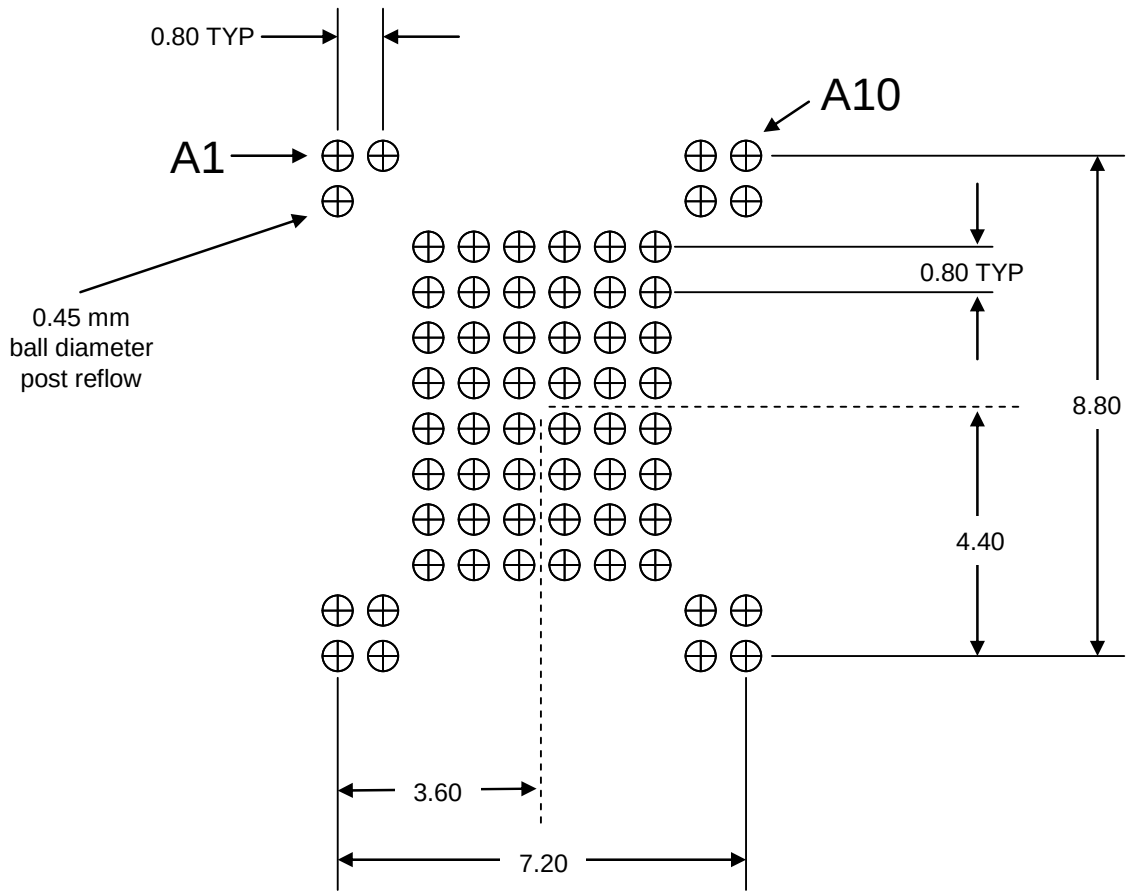

Figure 9 BGA-63 ball spacing requirements (top view, dimensions in millimeters)

2.4. BGA-100 Ball Assignments

Figure 10 defines the ball assignments for devices using 100-ball BGA packaging with dual 8-bit data access for the asynchronous data interface. Figure 11 defines the ball assignments for devices using 100-ball BGA packaging with dual 8-bit data access for the source synchronous data interface. Figure 12 defines the ball spacing requirements for the 100-ball BGA package. The solder ball diameter is 0.45 mm post reflow. The 100-ball BGA has two package sizes: 12mm x 18mm and 14mm x 18mm.

	1	2	3	4	5	6	7	8	9	10
A	R	R							R	R
B	R									R
C										
D		R	RFT	VSP3-2	WP2#	VSP2-2	VSP1-2	RFT	R	
E		R	RFT	VSP3-1	WP1#	VSP2-1	VSP1-1	RFT	R	
F		VCC	VCC	VCC	VCC	VCC	VCC	VCC	VCC	
G		VSS	VSS	VSS	VSS	VSS	VSS	VSS	VSS	
H		VSSQ	VCCQ	R	R	R/B2#	R/B4#	VCCQ	VSSQ	
J		IO0-2	IO2-2	ALE2	CE4#	R/B#	R/B3#	IO5-2	IO7-2	
K		IO0-1	IO2-1	ALE1	CE3#	CE2#	CE#	IO5-1	IO7-1	
L		VCCQ	VSSQ	VCCQ	CLE2	RE2#	VCCQ	VSSQ	VCCQ	
M		IO1-2	IO3-2	VSSQ	CLE1	RE1#	VSSQ	IO4-2	IO6-2	
N		IO1-1	IO3-1	NC	NC	NC	WE2#	IO4-1	IO6-1	
P		VSSQ	VCCQ	NC	NC	NC	WE1#	VCCQ	VSSQ	
R										
T	R									R
U	R	R							R	R

Figure 10 BGA-100 ball assignments for dual 8-bit data access, asynchronous data interface

	1	2	3	4	5	6	7	8	9	10
A	R	R							R	R
B	R									R
C										
D		R	RFT	VSP3-2	WP2#	VSP2-2	VSP1-2	RFT	R	
E		R	RFT	VSP3-1	WP1#	VSP2-1	VSP1-1	RFT	R	
F		VCC	VCC	VCC	VCC	VCC	VCC	VCC	VCC	
G		VSS	VSS	VSS	VSS	VSS	VSS	VSS	VSS	
H		VSSQ	VCCQ	VREFQ2	VREFQ1	R/B2#	R/B4#	VCCQ	VSSQ	
J		DQ0-2	DQ2-2	ALE2	CE4#	R/B#	R/B3#	DQ5-2	DQ7-2	
K		DQ0-1	DQ2-1	ALE1	CE3#	CE2#	CE#	DQ5-1	DQ7-1	
L		VCCQ	VSSQ	VCCQ	CLE2	W/R2#	VCCQ	VSSQ	VCCQ	
M		DQ1-2	DQ3-2	VSSQ	CLE1	W/R1#	VSSQ	DQ4-2	DQ6-2	
N		DQ1-1	DQ3-1	DQS2#	DQS2	CLK2#	CLK2	DQ4-1	DQ6-1	
P		VSSQ	VCCQ	DQS1#	DQS1	CLK1#	CLK1	VCCQ	VSSQ	
R										
T	R									R
U	R	R							R	R

Figure 11 BGA-100 ball assignments for dual 8-bit data access, source synchronous data interface

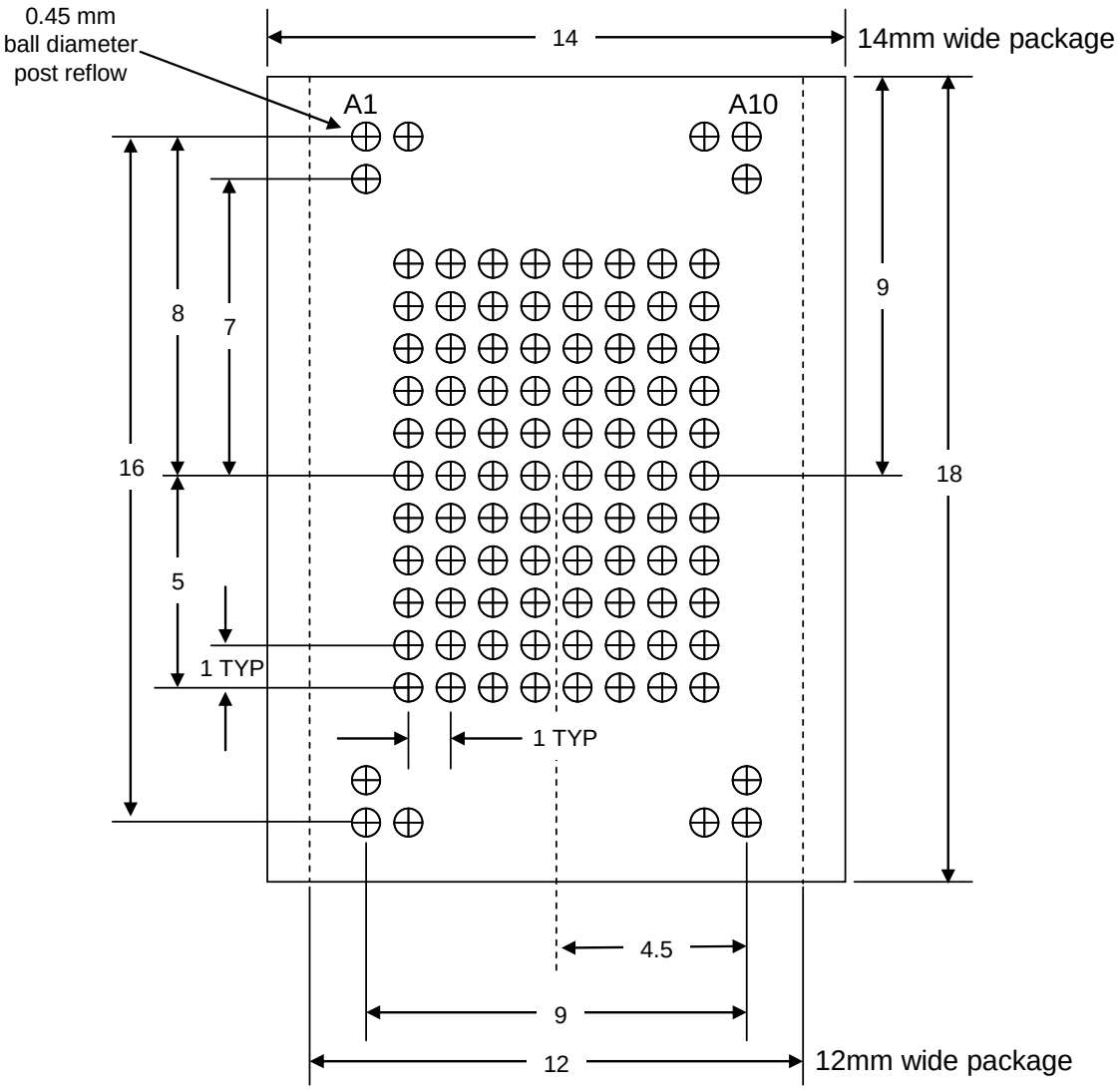

Figure 12 BGA-100 ball spacing requirements (top view, dimensions in millimeters)

2.5. Signal Descriptions

Table 2 provides the signal descriptions.

Signal Name	Input / Output	Description
R/Bx#	O	**Ready/Busy** The Ready/Busy signal indicates the target status. When low, the signal indicates that one or more LUN operations are in progress. This signal is an open drain output and requires an external pull-up. See section 2.15 for requirements.
REx#	I	**Read Enable** The Read Enable signal enables serial data output. This signal shares the same pin as W/Rx# in the source synchronous data interface.
W/Rx#	I	**Write/Read Direction** The Write/Read Direction signal indicates the owner of the DQ bus and DQS signal in the source synchronous data interface. This signal shares the same pin as REx# in the asynchronous data interface.
CEx#	I	**Chip Enable** The Chip Enable signal selects the target. When Chip Enable is high and the target is in the ready state, the target goes into a low-power standby state. When Chip Enable is low, the target is selected. See section 2.6 for additional requirements.
Vcc	I	**Power** The Vcc signal is the power supply to the device.
VccQ	I	**I/O Power** The VccQ signal is the power supply for input and/or output signals. Refer to section 2.8.1.
Vss	I	**Ground** The Vss signal is the power supply ground.
VssQ	I	**I/O Ground** The VssQ signal is the ground for input and/or output signals. Refer to section 2.8.1.
VREFQx	I	**Voltage Reference** This signal is reserved for future use.
CLEx	I	**Command Latch Enable** The Command Latch Enable signal is one of the signals used by the host to indicate the type of bus cycle (command, address, data). Refer to section 4.1.2.
ALEx	I	**Address Latch Enable** The Address Latch Enable signal is one of the signals used by the host to indicate the type of bus cycle (command, address, data). Refer to section 4.1.2.
WEx#	I	**Write Enable** The Write Enable signal controls the latching of input data in the asynchronous data interface. Data, commands, and addresses are latched on the rising edge of WE#. This signal shares the same pin as CLKx in the source synchronous data interface.
CLKx	I	**Clock** The Clock signal is used as the clock in the source synchronous data interface. This signal shares the same pin as WEx# in the asynchronous data interface.
CLKx#	I	**Clock Complement** This signal is reserved for future use.

Signal Name	Input / Output	Description
WPx#	I	**Write Protect** The Write Protect signal disables Flash array program and erase operations. See section 2.16 for requirements.
IO0 – IO7 (DQ0 – DQ7)	I/O	**I/O Port 1, bits 0-7** The I/O port is an 8-bit wide bidirectional port for transferring address, command, and data to and from the device. Also known as DQ0 – DQ7 for the source synchronous data interface.
DQSx	I/O	**Data Strobe** The data strobe signal that indicates the data valid window for the source synchronous data interface.
DQSx#	I/O	**Data Strobe Complement** This signal is reserved for future use.
IO8 – IO15	I/O	**I/O Port 1, bits 8-15** These signals are used in a 16-bit wide target configuration. The signals are the upper 8 bits for the 16-bit wide bidirectional port used to transfer data to and from the device.
IO0-2 – IO7-2 (DQ0-2 – DQ7-2)	I/O	**I/O Port 2, bits 0-7** The I/O port is an 8-bit wide bidirectional port for transferring address, command, and data to and from the device. These pins may be used as an additional 8-bit wide bidirectional port for devices that support two independent data buses. Also known as DQ0-2 – DQ7-2 for the source synchronous data interface.
VSPx		**Vendor Specific** The function of these signals is defined and specified by the NAND vendor. Devices shall have an internal pull-up or pull-down resistor on these signals to yield ONFI compliant behavior when a signal is not connected by the host. Any VSP signal not used by the NAND vendor shall not be connected internal to the device.
R		**Reserved** These pins shall not be connected by the host.
RFT		**Reserved for Test** These pins shall not be connected by the host.

Table 2 Signal descriptions

Table 3 provides the signal mapping to pin/pad/ball for each package type listed within the ONFI specification. These signal mappings are required if the packages listed in this specification are implemented. The “Async Only” signal mappings apply to packages where the device is not source synchronous capable. When the device is source synchronous capable, the “Src Sync” signal mappings shall be used. If a signal is marked as “na” then the corresponding package does not implement that signal. Any signal that does not have an associated number is implicitly numbered “1”. For example, WP# is equivalent to WP1#.

Devices may be implemented with other package types and be ONFI compliant if all other ONFI requirements within this specification are satisfied.

Signal Name	M/O/R	TSOP / WSOP Async only x8	TSOP / WSOP Src Sync x8	TSOP / WSOP Async only x16	LGA Async only x8	LGA Async only x16	BGA-63 Async only x8	BGA-63 Src Sync x8	BGA-63 Async only x16	BGA-100 Async only x8	BGA-100 Src Sync x8
R/B1#	M	7	7	7	E5	E5	C8	C8	C8	J6	J6
R/B2#	O	6	6	6	E7	E7	D8	D8	D8	H6	H6
R/B3#	O	5	5	5	A7	A7	E8	E8	E8	J7	J7
R/B4#	O	4	4	4	OA8	OA8	F8	F8	F8	H7	H7
RE1#	M	8	8	8	C7	C7	D4	D4	D4	M6	M6
RE2#	O	na	na	na	D6	na	na	na	na	L6	L6
W/R1#	M	na	8	na	na	na	na	D4	na	na	M6
W/R2#	O	na	na	na	na	na	na	na	na	na	L6
CE1#	M	9	9	9	A5	A5	C6	C6	C6	K7	K7
CE2#	O	10	10	10	C5	C5	D6	D6	D6	K6	K6
CE3#	O	14	14	14	A1	A1	D7	D7	D7	K5	K5
CE4#	O	15	15	15	OA0	OA0	E7	E7	E7	J5	J5
Vcc	M	12	12	12	B6	B6	D3	D3	D3	F2	F2
		37	37	37	M6	M6	G4	G4	G4	F3	F3
										F4	F4
										F5	F5
										F6	F6
										F7	F7
										F8	F8
										F9	F9
VccQ	M	34	34	34	N1	N1	H8	H8	H8	H3	H3
		39	39	39	N7	N7	J6	J6	J6	H8	H8
										L2	L2
										L4	L4
										L7	L7
										L9	L9
										P3	P3
										P8	P8

Signal Name	M/O/R	TSOP / WSOP Async only x8	TSOP / WSOP Src Sync x8	TSOP / WSOP Async only x16	LGA Async only x8	LGA Async only x16	BGA-63 Async only x8	BGA-63 Src Sync x8	BGA-63 Async only x16	BGA-100 Async only x8	BGA-100 Src Sync x8
Vss	M	13 36	13 36	13 36	B2 F6 L3	B2 F6 L3	C5 F7	C5 F7	C5 F7	G2 G3 G4 G5 G6 G7 G8 G9	G2 G3 G4 G5 G6 G7 G8 G9
VssQ	M	25 48	25 48	25 48	M2 OE8	M2 OE8	K8 K3	K8 K3	K8 K3	H2 H9 L3 L8 M4 M7 P2 P9	H2 H9 L3 L8 M4 M7 P2 P9
VREFQ1 VREFQ2	R R	na na	na na	na na	na na	na na	na na	F5 na	na na	na na	H5 H4
CLE1 CLE2	M O	16 na	16 na	16 na	A3 C3	A3 na	D5 na	D5 na	D5 na	M5 L5	M5 L5
ALE1 ALE2	M O	17 na	17 na	17 na	C1 D2	C1 na	C4 na	C4 na	C4 na	K4 J4	K4 J4
WE1# WE2#	M O	18 na	18 na	18 na	E3 E1	E3 na	C7 na	H7 na	C7 na	P7 N7	P7 N7
CLK1 CLK2	M O	na na	18 na	na na	na na	na na	na na	H7 na	na na	na na	P7 N7
CLK1# CLK2#	R R	na na	na na	na na	na na	na na	na na	H6 na	na na	na na	P6 N6
WP1# WP2#	M O	19 na	19 na	19 na	F2 G5	F2 na	C3 na	C3 na	C3 na	E5 D5	E5 D5

Signal Name	M/O/R	TSOP / WSOP Async only x8	TSOP / WSOP Src Sync x8	TSOP / WSOP Async only x16	LGA Async only x8	LGA Async only x16	BGA-63 Async only x8	BGA-63 Src Sync x8	BGA-63 Async only x16	BGA-100 Async only x8	BGA-100 Src Sync x8
IO0 / DQ0	M	29	29	29	G3	G3	H4	H4	H4	K2	K2
IO1 / DQ1	M	30	30	30	H2	H2	J4	J4	J4	N2	N2
IO2 / DQ2	M	31	31	31	J3	J3	K4	K4	K4	K3	K3
IO3 / DQ3	M	32	32	32	K2	K2	K5	K5	K5	N3	N3
IO4 / DQ4	M	41	41	41	L5	L5	K6	K6	K6	N8	N8
IO5 / DQ5	M	42	42	42	K6	K6	J7	J7	J7	K8	K8
IO6 / DQ6	M	43	43	43	J5	J5	K7	K7	K7	N9	N9
IO7 / DQ7	M	44	44	44	H6	H6	J8	J8	J8	K9	K9
IO8	M	na	na	26	na	G1	na	na	H3	na	na
IO9	M	na	na	27	na	J1	na	na	J3	na	na
IO10	M	na	na	28	na	L1	na	na	H5	na	na
IO11	M	na	na	33	na	N3	na	na	J5	na	na
IO12	M	na	na	40	na	N5	na	na	H6	na	na
IO13	M	na	na	45	na	L7	na	na	G6	na	na
IO14	M	na	na	46	na	J7	na	na	H7	na	na
IO15	M	na	na	47	na	G7	na	na	G7	na	na
IO0-2 / DQ0-2	O	na	na	na	G1	na	na	na	na	J2	J2
IO1-2 / DQ1-2	O	na	na	na	J1	na	na	na	na	M2	M2
IO2-2 / DQ2-2	O	na	na	na	L1	na	na	na	na	J3	J3
IO3-2 / DQ3-2	O	na	na	na	N3	na	na	na	na	M3	M3
IO4-2 / DQ4-2	O	na	na	na	N5	na	na	na	na	M8	M8
IO5-2 / DQ5-2	O	na	na	na	L7	na	na	na	na	J8	J8
IO6-2 / DQ6-2	O	na	na	na	J7	na	na	na	na	M9	M9
IO7-2 / DQ7-2	O	na	na	na	G7	na	na	na	na	J9	J9
DQS1	M	na	35	na	na	na	na	J5	na	na	P5
DQS2	O	na	na	na	na	na	na	na	na	na	N5
DQS1#	R	na	na	na	na	na	na	H5	na	na	P4
DQS2#	R	na	na	na	na	na	na	na	na	na	N4
VSP1	O	38	38	38	na	na	G5	G5	G5	E7	E7
VSP2	O	35	na	35	na	na	G8	G8	G8	E6	E6
VSP3	O	20	20	20	na	na	G3	G3	G3	E4	E4
VSP1-2	O	na	na	na	na	na	na	na	na	D7	D7
VSP2-2	O	na	na	na	na	na	na	na	na	D6	D6
VSP3-2	O	na	na	na	na	na	na	na	na	D4	D4

Table 3 Signal mappings: TSOP, LGA, BGA packages

2.6. CE# Signal Requirements

If one or more LUNs are active and the host sets CE# to one, then those operations continue executing until completion at which point the target enters standby. After the CE# signal is transitioned to one, the host may drive a different CE# signal to zero and begin operations on another target. Note that if using a dual x8 package (e.g. BGA-100), then operations may execute in parallel on two different CE#s if they are connected to different 8-bit data buses.

When SR[6] for a particular LUN is cleared to zero and the CE# signal for the corresponding target is cleared to zero, the host may only issue the Reset, Synchronous Reset, Read Status, or Read Status Enhanced commands to that LUN.

2.6.1. Source Synchronous Data Interface Requirements

When using the source synchronous data interface, the following requirements shall be met:

1. CLK shall only stop, start or change frequency when CE# is high.
2. When CE# is low, CLK shall maintain the same frequency.
3. CE# shall only transition from one to zero when the CLK is stable and has a valid period based on the timing mode selected.
4. The interface shall be in an idle state when CE# changes value. CE# shall only transition when the following are true:
    a. ALE and CLE are both cleared to zero, and
    b. There is no data transfer on the DQ/DQS signals during the current clock period.

2.7. Absolute Maximum DC Ratings

Stresses greater than those listed in Table 4 may cause permanent damage to the device. This is a stress rating only. Operation beyond the recommended operating conditions specified in Table 5 and the DC and operating characteristics listed in Table 8 and Table 9 is not recommended. Except as defined in section 2.9, extended exposure beyond these conditions may affect device reliability.

Table 4 defines the voltage on any pin relative to Vss and/or VssQ for devices based on their Vcc and VccQ typical voltages.

Parameter	Symbol	Rating	Units
Vcc = 3.3V and VccQ = 3.3V nominal			
Vcc Supply Voltage	V_{CC}	-0.6 to +4.6	V
Voltage Input	V_{IN}	-0.6 to +4.6	
VccQ Supply Voltage	V_{CCQ}	-0.6 to +4.6	
Vcc = 3.3V and VccQ = 1.8V nominal			
Vcc Supply Voltage	V_{CC}	-0.6 to +4.6	V
Voltage Input	V_{IN}	-0.2 to +2.4	
VccQ Supply Voltage	V_{CCQ}	-0.2 to +2.4	
Vcc = 1.8V and VccQ = 1.8V nominal			
Vcc Supply Voltage	V_{CC}	-0.2 to +2.4	V
Voltage Input	V_{IN}	-0.2 to +2.4	
VccQ Supply Voltage	V_{CCQ}	-0.2 to +2.4	

Table 4 Absolute maximum DC ratings

2.8. Recommended DC Operating Conditions

Parameter	Symbol	Min	Typ	Max	Units
Supply voltage for 3.3V devices	V_{CC}	2.7	3.3	3.6	V
Supply voltage for 1.8V devices	V_{CC}	1.7	1.8	1.95	V
Supply voltage for 3.3V I/O signaling	V_{CCQ} (V_{CCQH})	2.7	3.3	3.6	V
Supply voltage for 1.8V I/O signaling	V_{CCQ} (V_{CCQL})	1.7	1.8	1.95	V
Ground voltage supply	V_{SS}	0	0	0	V
Ground voltage supply for I/O signaling	V_{SSQ}	0	0	0	V

Table 5 Recommended DC operating conditions

2.8.1. I/O Power (VccQ) and I/O Ground (VssQ)

VccQ and Vcc may be distinct and unique voltages. VccQ shall be less than or equal to Vcc, including during power-on ramp. The device shall support one of the following VccQ/Vcc combinations:

- Vcc = 3.3V, VccQ = 3.3V
- Vcc = 3.3V, VccQ = 1.8V
- Vcc = 1.8V, VccQ = 1.8V

All parameters, timing modes, and other characteristics are relative to the supported voltage combination.

If a device has the same Vcc and VccQ voltage levels, then VccQ and VssQ are not required to be connected internal to the device. Specifically, the device may use Vcc and Vss exclusively as the I/O and core voltage supply.

2.9. AC Overshoot/Undershoot Requirements

The device may have AC overshoot or undershoot from VccQ and VssQ levels. Table 6 defines the maximum values that the AC overshoot or undershoot may attain. These values apply for both 3.3V and 1.8V VccQ levels.

Parameter	Maximum Value		Unit
	<= 100 MT/s	> 100 MT/s and <= 133 MT/s	
Peak amplitude allowed for overshoot area	1	1	V
Peak amplitude allowed for undershoot area	1	1	V
Maximum Overshoot area above VccQ	3	2.25	V-ns
Maximum Undershoot area below VssQ	3	2.25	V-ns

Table 6 AC Overshoot/Undershoot Maximum Values

Figure 13 displays pictorially the parameters described in Table 6.

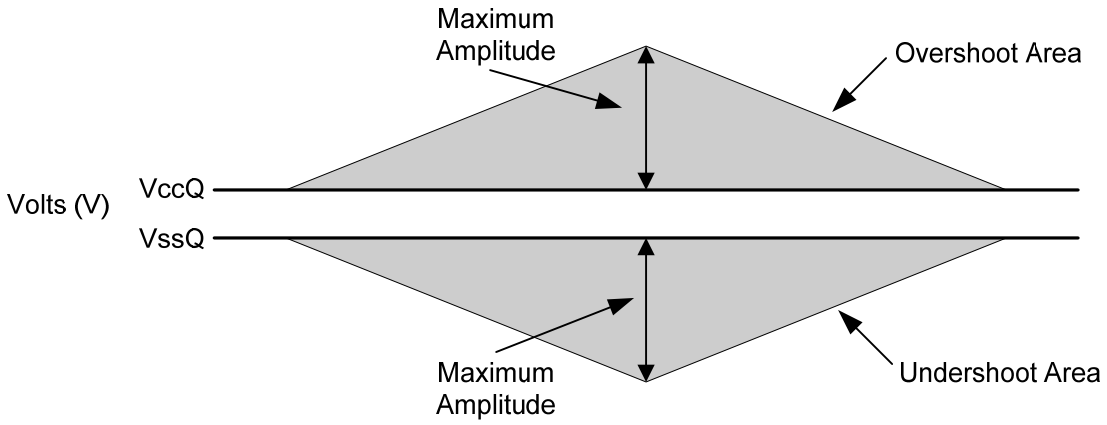

Figure 13 Overshoot/Undershoot Diagram

2.10. DC and Operating Characteristics

All operating current ratings in this section are specified per active logical unit (LUN). A LUN is active when there is a command outstanding to it. All other current ratings in this section are specified per LUN (regardless of whether it is active).

For high performance applications it may be desirable to draw increased current for ICC1-ICC3. For these applications, the device may draw up to 100 mA per active LUN in both 3.3V and 1.8V devices. Increased current may be used to improve sustained write performance.

All ICC measurements are measured with each Vcc pin decoupled with a 0.1 µF capacitor. All ICCQ measurements are measured with each VccQ pin decoupled with a 0.1 µF capacitor. The ICC and ICCQ definitions assume outputs change between one and zero every other data cycle (once per CLK period, every other DQS transition) for data signals.

Parameter	Symbol	Test Conditions	Min	Typ	Max	Units
Operating current Read Page and data output	ICC1	CE#=VIL (DC), tCK = tCK(min) or tRC= tRC (min), IOUT=0 mA	-	-	50	mA
Operating current Program	ICC2	-	-	-	50	mA
Operating current Erase	ICC3	-	-	-	50	mA
Standby current, CMOS	ISB	CE#=VccQ-0.2V, WP#=0V/VccQ	-	-	50	µA
Staggered power-up current	IST	tRise = 1 ms cLine = 0.1 µF			10	mA

Table 7 DC and Operating Conditions, measured on Vcc rail

The maximum leakage current requirements (ILI and ILO) in Table 8 and Table 9 are tested across the entire allowed VccQ range, specified in Table 5.

DC signal specifications apply to the following signals and only when using the source synchronous data interface: CLK, DQ[7:0], DQS, ALE, CLE, and W/R#. For all signals in asynchronous and all other signals in source synchronous, the AC signal specification shall be met. For signals where DC signal specifications apply, the transition times are measured between VIL (DC) and VIH (AC) for rising input signals and between VIH (DC) and VIL (AC) for falling input signals.

The parameters in Table 8 and Table 9 apply to power-on default values in the device. If I/O drive strength settings or other device settings are changed, these values may be modified. The output characteristics for the source synchronous data interface are specified in the impedance tables (Table 23 and Table 24).

Parameter	Symbol	Test Conditions	Min	Typ	Max	Units
Operating current data output	ICCQ1	CE#=VIL (DC), tCK=tCK(min) or tRC=tRC(min), IOUT=0mA	-	-	50	mA
Standby current, CMOS	ISBQ	CE#=VccQ-0.2V, WP#=0V/VccQ	-	-	25	µA
Input leakage current	ILI	VIN=0V to VccQ	-	-	+-10	µA
Output leakage current	ILO	VOUT=0V to VccQ	-	-	+-10	µA
DC Input high voltage	VIH (DC)	-	VccQ * 0.7	-	VccQ + 0.3	V
AC Input high voltage	VIH (AC)	-	VccQ * 0.8	-	VccQ + 0.3	V
DC Input low voltage	VIL (DC)	-	-0.3	-	VccQ * 0.3	V
AC Input low voltage	VIL (AC)	-	-0.3	-	VccQ * 0.2	V
Output high voltage	VOH	IOH=-400 µA	VccQ * 0.67	-	-	V
Output low voltage	VOL	IOL=2.1 mA		-	0.4	V
Output low current (R/B#)	IOL(R/B#)	VOL=0.4 V	8	10	-	mA

Table 8 DC and Operating Conditions for VccQ of 3.3V, measured on VccQ rail

Parameter	Symbol	Test Conditions	Min	Typ	Max	Units
Operating current data output	ICCQ1	CE#=VIL (DC), tCK=tCK(min) or tRC=tRC(min), IOUT=0mA	-	-	50	mA
Standby current, CMOS	ISBQ	CE#=VccQ-0.2V, WP#=0V/VccQ	-	-	25	µA
Input leakage current	ILI	VIN=0V to VccQ	-	-	+-10	µA
Output leakage current	ILO	VOUT=0V to VccQ	-	-	+-10	µA
DC Input high voltage	VIH (DC)	-	VccQ * 0.7	-	VccQ+0.3	V
AC Input high voltage	VIH (AC)	-	VccQ * 0.8	-	VccQ+0.3	V
DC Input low voltage	VIL (DC)	-	-0.3	-	VccQ * 0.3	V
AC Input low voltage	VIL (AC)	-	-0.3	-	VccQ * 0.2	V
Output high voltage	VOH	IOH=-100 µA	VccQ – 0.1	-	-	V
Output low voltage	VOL	IOL=100 µA	-	-	0.1	V
Output low current (R/B#)	IOL(R/B#)	VOL=0.2 V	3	4	-	mA

Table 9 DC and Operating Conditions for VccQ of 1.8V, measured on VccQ rail

2.11. Calculating Pin Capacitance

To calculate the pin capacitance for all loads on the I/O bus, the host should utilize the reported pin capacitance per target in Read Parameter Page (refer to section 5.6). The maximum capacitance may be used, or the typical capacitance if provided by the device may be used. The algorithm to use is:

```
PinCapacitance = 0;
for (target = 0; target < TotalTargets; target++)
      PinCapacitance += GetCapacitanceFromRPP(target);
```

This methodology will calculate an accurate maximum or typical pin capacitance, respectively, accounting for all targets present.

2.12. Staggered Power-up

Subsystems that support multiple Flash devices may experience power system design issues related to the current load presented during the power-on condition. To limit the current load presented to the host at power-on, all devices shall support power-up in a low-power condition.

Until a Reset (FFh) command is received by the target after power-on, the target shall not draw more than 10 mA of current per LUN (defined by the IST parameter). For example, a target that contains 4 LUNs may draw up to 40 mA of current until a Reset (FFh) command is received after power-on.

This value is measured with a nominal rise time (tRise) of 1 millisecond and a line capacitance (cLine) of 0.1 µF. The measurement shall be taken with 1 millisecond averaging intervals and shall begin after Vcc reaches Vcc_min and VccQ reaches VccQ_min.

2.13. Independent Data Buses

There may be two independent 8-bit data buses in some ONFI packages (i.e. the LGA and the 100-ball BGA package). If the device supports two independent data buses, then CE2# and CE4# (if connected) shall use the second data bus. CE1# and CE3# shall always use the first data bus pins. Note that CE1#, CE2#, CE3#, and CE4# may all use the first data bus and the first set of control signals (RE1#, CLE1, ALE1, WE1#, and WP1#) if the device does not support independent data buses.

Table 10 defines the control signal to CE# signal mapping when there are two independent x8 data buses. Note that there is no independent data bus capability for the other ONFI defined pinouts.

Signal Name	CE
R/B1#	CE1#
R/B2#	CE2#
R/B3#	CE3#
R/B4#	CE4#
RE1# / W/R1#	CE1#, CE3#
RE2# / W/R2#	CE2#, CE4#
CLE1	CE1#, CE3#
CLE2	CE2#, CE4#
ALE1	CE1#, CE3#
ALE2	CE2#, CE4#
WE1# / CLK1	CE1#, CE3#
WE2# / CLK2	CE2#, CE4#
WP1#	CE1#, CE3#
WP2#	CE2#, CE4#
DQS1	CE1#, CE3#
DQS2	CE2#, CE4#

Table 10 Dual x8 Data Bus Signal to CE# mapping

Implementations may tie the data lines and control signals (RE#, CLE, ALE, WE#, WP#, and DQS) together for the two independent 8-bit data buses externally to the device.

2.14. Bus Width Requirements

All targets per device shall use the same data bus width. All targets shall either have an 8-bit bus width or a 16-bit bus width. Note that devices that support the source synchronous interface shall have an 8-bit bus width.

When the host supports a 16-bit bus width, only data is transferred at the 16-bit width. All address and command line transfers shall use only the lower 8-bits of the data bus. During command transfers, the host may place any value on the upper 8-bits of the data bus. During address transfers, the host shall set the upper 8-bits of the data bus to 00h.

2.15. Ready/Busy (R/B#) Requirements

2.15.1. Power-On Requirements

Once V_{CC} and VccQ reach the V_{CC} minimum and VccQ minimum values, respectively, listed in Table 5 and power is stable, the R/B# signal shall be valid after 10 µs and shall be set to one (Ready) within 1 ms. R/B# is undefined until 50 µs has elapsed after V_{CC} has started to ramp. The R/B# signal is not valid until both of these conditions are met.

During power-on, VccQ shall be less than or equal to Vcc at all times. Figure 14 shows VccQ ramping after Vcc, however, they may ramp at the same time.

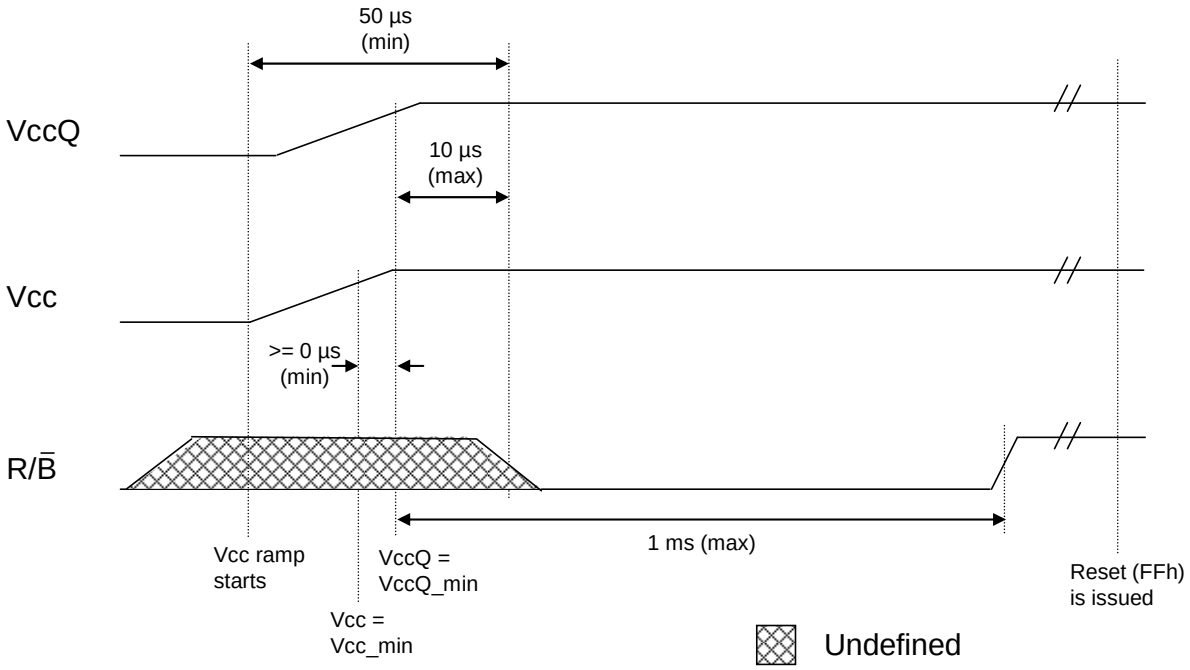

Figure 14 R/B# Power-On Behavior

Ready/Busy is implemented as an open drain circuit, thus a pull-up resistor shall be used for termination. The combination of the pull-up resistor and the capacitive loading of the R/B# circuit determines the rise time of R/B#.

2.15.2. R/B# and SR[6] Relationship

R/B# shall reflect the logical AND of the SR[6] (Status Register bit 6) values for all LUNs on the corresponding target. For example, R/B3# is the logical AND of the SR[6] values for all LUNs on CE3#. Thus, R/B# reflects whether any LUN is busy on a particular target.

2.16. Write Protect

When cleared to zero, the WP# signal disables Flash array program and erase operations. This signal shall only be transitioned while there are no commands executing on the device. After modifying the value of WP#, the host shall not issue a new command to the device for at least tWW delay time.

Figure 15 describes the tWW timing requirement, shown with the start of a Program command. The transition of the WP# signal is asynchronous and unrelated to any CLK transition in the source synchronous data interface. The bus shall be idle for tWW time after WP# transitions from zero to one before a new command is issued by the host, including Program. The bus shall be idle for tWW time after WP# transitions from one to zero before a new command is issued by the host.

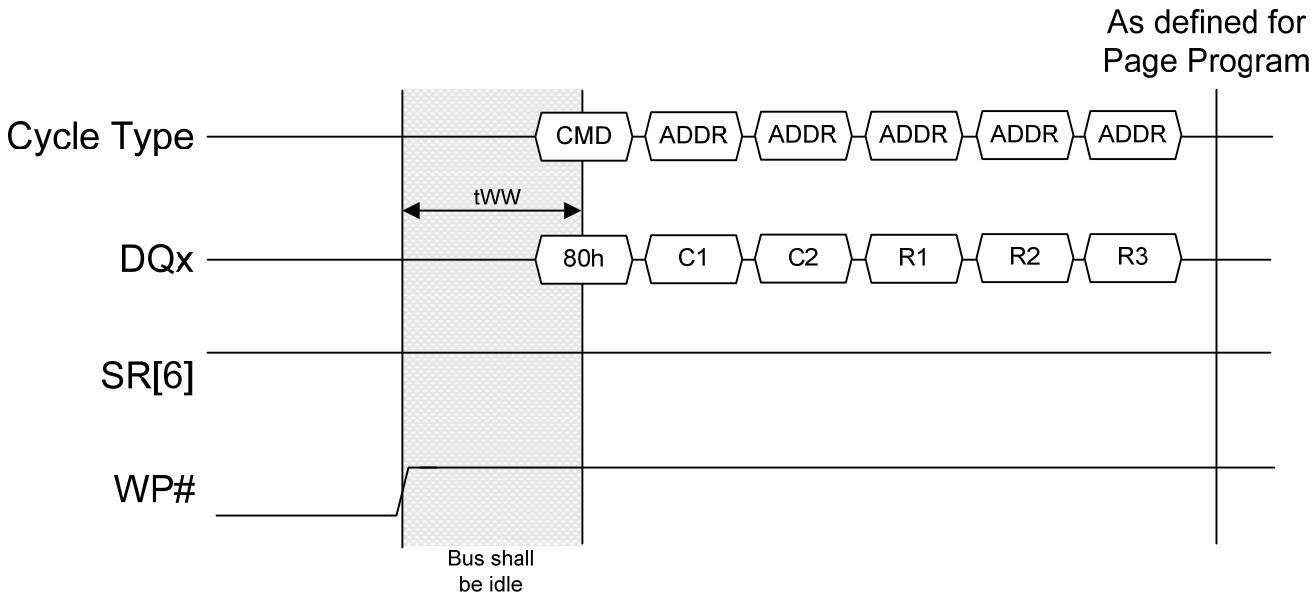

Figure 15 Write Protect timing requirements, example

3. Memory Organization

Figure 16 shows an example of a Target memory organization. In this case, there are two logical units where each logical unit supports two-way interleaved addresses.

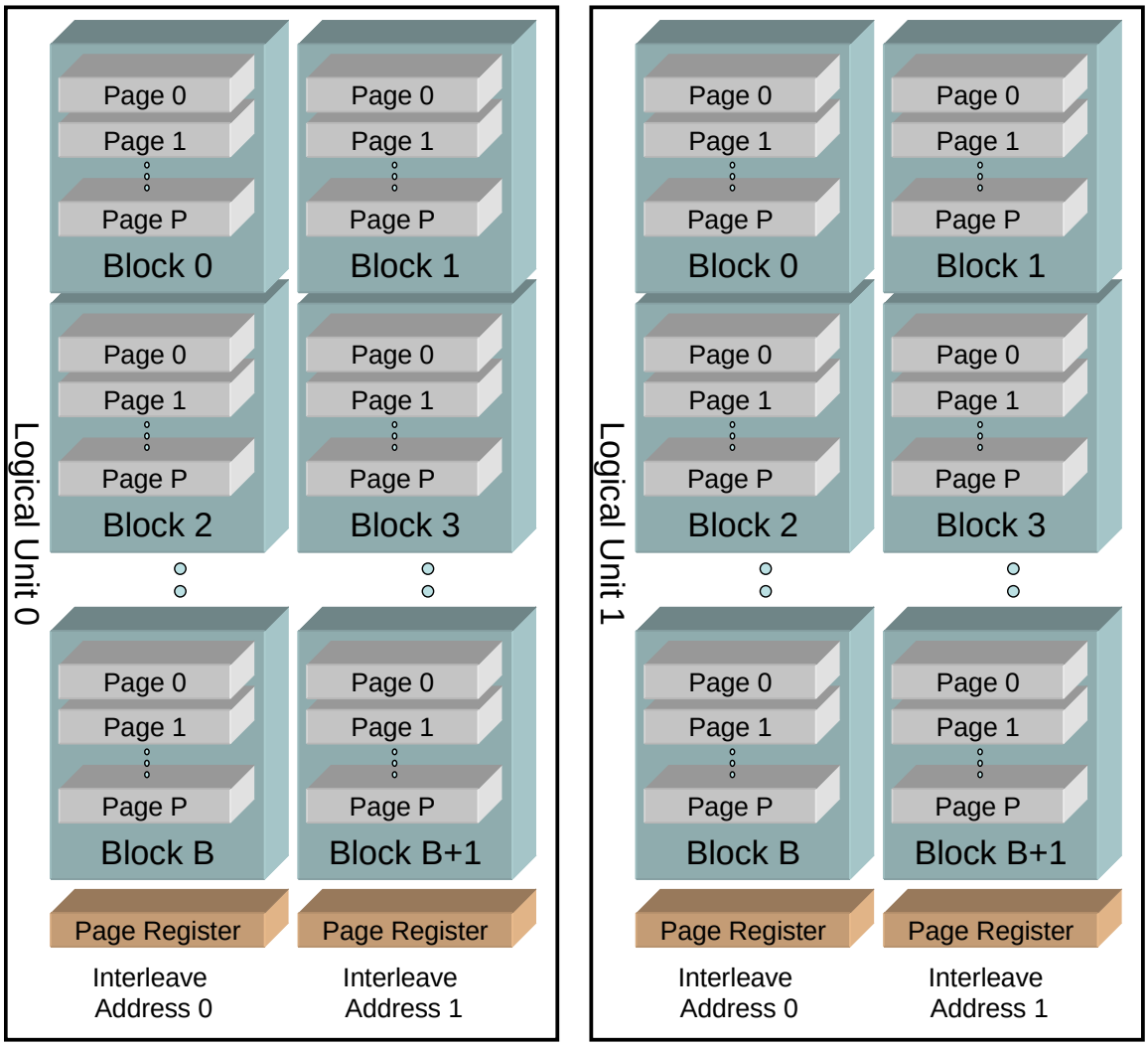

Figure 16 Target memory organization

A device contains one or more targets. A target is controlled by one CE# signal. A target is organized into one or more logical units (LUNs).

A logical unit (LUN) is the minimum unit that can independently execute commands and report status. Specifically, separate LUNs may operate on arbitrary command sequences in parallel. For example, it is permissible to start a Page Program operation on LUN 0 and then prior to the operation's completion to start a Read command on LUN 1. See multiple LUN operation restrictions in section 3.1.3. A LUN contains at least one page register and a Flash array. The number of page registers is dependent on the number of interleaved operations supported for that LUN. The Flash array contains a number of blocks.

A block is the smallest erasable unit of data within the Flash array of a LUN. There is no restriction on the number of blocks within the LUN. A block contains a number of pages.

A page is the smallest addressable unit for read and program operations. For targets that support partial page programming with constraints, the smallest addressable unit for program operations is a partial page. A page consists of a number of bytes or words. The number of user data bytes per page, not including the spare data area, shall be a power of two. The number of pages per block shall be a multiple of 32.

Each LUN shall have at least one page register. A page register is used for the temporary storage of data before it is moved to a page within the Flash array or after it is moved from a page within the Flash array.

The byte or word location within the page register is referred to as the column.

There are two mechanisms to achieve parallelism within this architecture. There may be multiple commands outstanding to different LUNs at the same time. To get further parallelism within a LUN, interleaved addressing may be used to execute additional dependent operations in parallel.

3.1. Addressing

There are two address types used: the column address and the row address. The column address is used to access bytes or words within a page, i.e. the column address is the byte/word offset into the page. The least significant bit of the column address shall always be zero in the source synchronous data interface, i.e. an even number of bytes is always transferred. The row address is used to address pages, blocks, and LUNs.

When both the column and row addresses are required to be issued, the column address is always issued first in one or more 8-bit address cycles. The row addresses follow in one or more 8-bit address cycles. There are some functions that may require only row addresses, like Block Erase. In this case the column addresses are not issued.

For both column and row addresses the first address cycle always contains the least significant address bits and the last address cycle always contains the most significant address bits. If there are bits in the most significant cycles of the column and row addresses that are not used then they are required to be cleared to zero.

The row address structure is shown in Figure 17 with the least significant row address bit to the right and the most significant row address bit to the left.

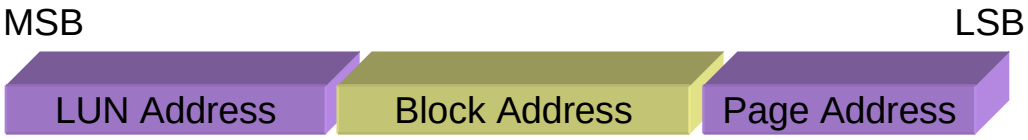

Figure 17 Row Address Layout

The number of blocks and number of pages per block is not required to be a power of two. In the case where one of these values is not a power of two, the corresponding address shall be rounded to an integral number of bits such that it addresses a range up to the subsequent power of two value. The host shall not access upper addresses in a range that is shown as not supported. For example, if the number of pages per block is 96, then the page address shall be rounded to 7 bits such that it can address pages in the range of 0 to 127. In this case, the host shall not access pages in the range from 96 to 127 as these pages are not supported.

The page address always uses the least significant row address bits. The block address uses the middle row address bits and the LUN address uses the most significant row address bit(s).

3.1.1. Interleaved Addressing

The interleaved address comprises the lowest order bits of the block address as shown in Figure 18. The following restrictions apply to the interleaved address when executing an interleaved command sequence on a particular LUN:

- The interleaved address bit(s) shall be distinct from any other interleaved operation in the interleaved command sequence.
- The page address shall be the same as any other interleaved operations in the interleaved command sequence.

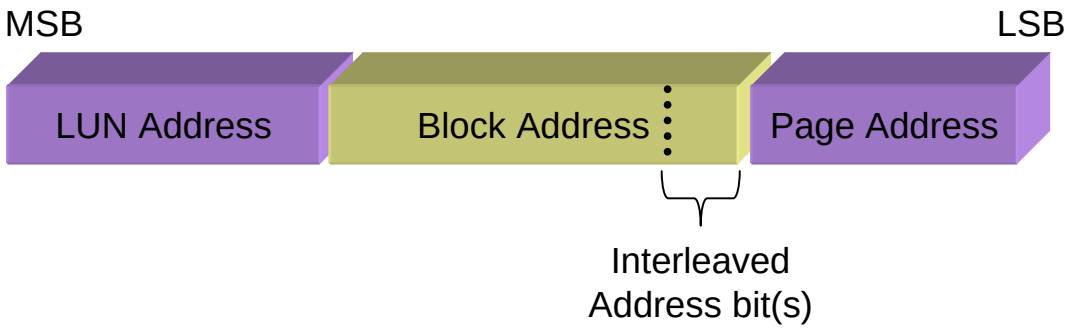

Figure 18 Interleaved Address Location

3.1.2. Logical Unit Selection

Logical units within one target share a single data bus with the host. The host shall ensure that only one LUN is selected for data output to the host at any particular point in time to avoid bus contention.

The host selects a LUN for future data output by issuing a Read Status Enhanced command to that LUN. The Read Status Enhanced command shall deselect the output path for all LUNs that are not addressed by the command. The page register selected for output within the LUN is determined by the previous Read (Cache) commands issued, and is not impacted by Read Status Enhanced.

3.1.3. Multiple LUN Operation Restrictions

LUNs are independent entities. A multiple LUN operation is one in which two or more LUNs are simultaneously processing commands. This implies that R/B# is cleared to zero when the subsequent LUN operation is issued.

When a Page Program command (80h) is issued on any LUN that is not preceded by an 11h command, all idle LUNs may clear their page registers. Thus, the host should not begin a Page Program command on a LUN while a Read Page operation is either ongoing on another LUN or has completed but the data has not been read from another LUN, as the contents of the page register for the Read operation will be lost. A Read Page can be issued to one LUN while a Page Program is ongoing within a second LUN without any restriction.

When issuing Reads to multiple LUNs, the host shall take steps to avoid issues due to column address corruption. Specifically, if the column addresses in Reads issued to multiple LUNs are different, then the host shall issue a Change Read Column before starting to read out data from a newly selected LUN. If the column addresses are the same, then no Change Read Column is necessary.

If a multiple LUN operation has been issued, then the next status command issued shall be Read Status Enhanced. Read Status Enhanced causes LUNs that are not selected to turn off their output buffers. This ensures that only the LUN selected by the Read Status Enhanced command responds to a subsequent data output cycle. After a Read Status Enhanced command has been completed, the Read Status command may be used until the next multiple LUN operation is issued.

When the host has issued Read Page commands to multiple LUNs at the same time, the host shall issue Read Status Enhanced before reading data from either LUN. This ensures that only the LUN selected by the Read Status Enhanced command responds to a data output cycle after being put in data output mode with a 00h command, and thus avoiding bus contention.

3.2. Factory Defect Mapping

The Flash array is not presumed to be pristine, and a number of defects may be present that renders some blocks unusable. Block granularity is used for mapping factory defects since those defects may compromise the block erase capability.

3.2.1. Device Requirements

If a block is defective and 8-bit data access is used, the manufacturer shall mark the block as defective by setting at least one byte in the defect area, as shown in Figure 19, of the first or last page of the defective block to a value of 00h. If a block is defective and 16-bit data access is used, the manufacturer shall mark the block as defective by setting at least one word in the defect area of the first or last page of the defective block to a value of 0000h.

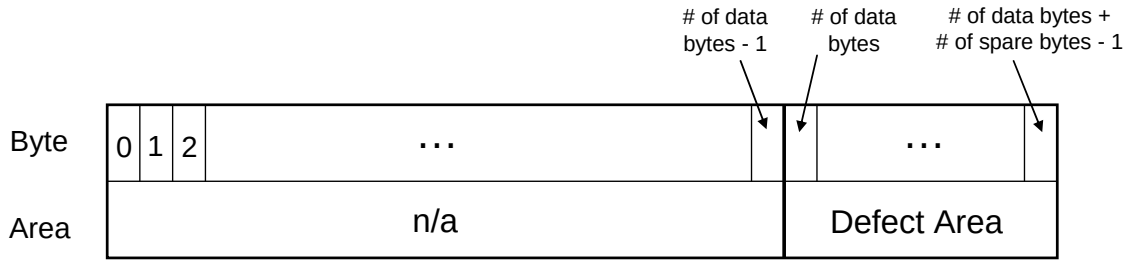

Figure 19 Area marked in factory defect mapping

3.2.2. Host Requirements

The host shall not erase or program blocks marked as defective by the manufacturer, and any attempt to do so yields indeterminate results.

Figure 20 outlines the algorithm to scan for factory mapped defects. This algorithm should be performed by the host to create the initial bad block table prior to performing any erase or programming operations on the target. The initial state of all pages in non-defective blocks is FFh (or FFFFh for 16-bit access) for all page addresses, although some bit errors may be present if

they are correctable via the required ECC reported to the host. A defective block is indicated by a byte value equal to 00h for 8-bit access or a word value equal to 0000h for 16-bit access being present at any page byte/word location in the defect area of either the first page or last page of the block. The host shall check the defect area of both the first and last past page of each block to verify the block is valid prior to any erase or program operations on that block.

Note: Over the lifetime use of a NAND device, the defect area of defective blocks may encounter read disturbs that cause values to change. The manufacturer defect markings may change value over the lifetime of the device, and are expected to be read by the host and used to create a bad block table during initial use of the part.

```
for (i=0; i<NumLUNs; i++)
{
    for (j=0; j<BlocksPerLUN; j++)
    {
        Defective=FALSE;

        ReadPage(lun=i; block=j; page=0; DestBuff=Buff);
        for (column=PageSize; column<PageSize+SpareBytes; column++)
        {
            if (Buff[column] == 00h)        // Value checked for is 0000h for 16-bit access
                Defective=TRUE;
        }

        ReadPage(lun=i; block=j; page=PagesPerBlock-1; DestBuff=Buff);
        for (column=PageSize; column<PageSize+SpareBytes; column++)
        {
            if (Buff[column] == 00h)        // Value checked for is 0000h for 16-bit access
                Defective=TRUE;
        }

        if (Defective)
            MarkBlockDefective(lun=i; block=j);
    }
}
```

Figure 20 Factory defect scanning algorithm

3.3. Discovery and Initialization

3.3.1. CE# Discovery

There may be up to four chip enable (CE#) signals on a package, one for each separately addressable target. To determine the targets that are connected, the procedure outlined in this section shall be followed for each distinct CE# signal. CE# signals shall be used sequentially on the device; CE1# is always connected and CE# signals shall be connected in a numerically increasing order. The host shall attempt to enumerate targets connected to all host CE# signals.

The discovery process for a package that supports independent dual data buses includes additional steps to determine which data bus the target is connected to. The LGA and 100-ball BGA package with 8-bit data access are the packages within ONFI that have a dual data bus option.

3.3.1.1. Single Data Bus Discovery

The CE# to test is first pulled low by the host to enable the target if connected, while all other CE# signals are pulled high. The host shall then issue the Reset (FFh) command to the target. Following the reset, the host should then issue a Read ID command to the target. If the ONFI signature is returned by the Read ID command with address 20h, then the corresponding target is connected. If the ONFI signature is not returned or any step in the process encountered an error/timeout, then the CE# is not connected and no further use of that CE# signal shall be done.

3.3.1.2. Dual Data Bus Discovery

The CE# to test is first pulled low by the host to enable the target if connected, while all other CE# signals are pulled high. The host shall then issue the Reset (FFh) command to the target. Following the reset, the host should then issue a Read ID command with address 20h to the target. If the ONFI signature is returned by the Read ID command, then the corresponding target is connected.

If the ONFI signature is not returned (or any step in the process encountered an error/timeout), then the second 8-bit data bus should be probed. The host shall issue the Reset (FFh) command to the target using the second 8-bit data bus. Following the reset, the host should then issue a Read ID command with address 20h to the target on the second 8-bit data bus. If the ONFI signature is returned by the Read ID command, then the corresponding target is connected and is using the second 8-bit data bus. After discovering that the target is using the second 8-bit data bus, all subsequent commands to that target shall use the second 8-bit data bus including Read Parameter Page.

If after this point a valid ONFI signature is not discovered or further errors were encountered, then the CE# is not connected and no further use of that CE# signal shall be done.

3.3.2. Target Initialization

To initialize a discovered target, the following steps shall be taken. The initialization process should be followed for each connected CE# signal, including performing the Read Parameter Page (ECh) command for each target. Each chip enable corresponds to a unique target with its own independent properties that the host shall observe and subsequently use.

The host should issue the Read Parameter Page (ECh) command. This command returns information that includes the capabilities, features, and operating parameters of the device. When the information is read from the device, the host shall check the CRC to ensure that the data was received correctly and without error prior to taking action on that data.

If the CRC of the first parameter page read is not valid (refer to section 5.6.1.43), the host should read redundant parameter page copies. The host can determine whether a redundant parameter page is present or not by checking if the first four bytes contain at least two bytes of the parameter page signature. If the parameter page signature is present, then the host should read the entirety of that redundant parameter page. The host should then check the CRC of that redundant parameter page. If the CRC is correct, the host may take action based on the contents of that redundant parameter page. If the CRC is incorrect, then the host should attempt to read the next redundant parameter page by the same procedure.

The host should continue reading redundant parameter pages until the host is able to accurately reconstruct the parameter page contents. The host may use bit-wise majority or other ECC techniques to recover the contents of the parameter page from the parameter page copies present. When the host determines that a parameter page signature is not present (refer to section 5.6.1.1), then all parameter pages have been read.

The Read ID and Read Parameter Page commands only use the lower 8-bits of the data bus. The host shall not issue commands that use a word data width on x16 devices until the host determines the device supports a 16-bit data bus width in the parameter page.

After successfully retrieving the parameter page, the host has all information necessary to successfully communicate with that target. If the host has not previously mapped defective block information for this target, the host should next map out all defective blocks in the target. The host may then proceed to utilize the target, including erase and program operations.

3.4. Partial Page Programming

3.4.1. Requirements

Programming multiple partial pages (data and corresponding spare) in a single program operation is allowed.

The “Number of programs per page” parameter (refer to section 5.6.1.22) shall not be exceeded by the host. If this parameter is less than the number of partial pages (defined in section 3.4.2), then multiple partial pages need to be programmed in a single program operation in order to not exceed this attribute.

If the host does not support the partial page layout and boundaries that the target supports, then the host shall not use partial page programming with the target.

3.4.2. Host Discovery

The following flow describes the process by which the host discovers the constraints and attributes of partial page programming that the target may support.

1. The host determines if the target supports partial page programming by checking the “Number of programs per page” field in the parameter page. If set to a value larger than one, then the target supports partial page programming.

2. If the target supports partial page programming, the host determines if there are any constraints for partial page programming. The host checks the “Partial page programming attributes” field in the parameter page. If bit 0 is set to zero, then there are no constraints and the host may issue partial programs starting at any byte/word offset with any size. If bit 0 is set to one, then there are constraints.

3. If there are constraints for partial page programming, then the host checks the Constraints subfield in the “Partial page programming attributes” field in the parameter page. If there are constraints, then partial pages shall be written on partial page boundaries in partial page multiples according to the data / spare layout that the target indicates is supported.

4. The host determines the number of partial pages by the equation below. Note that the target may have an arbitrary amount of additional spare area at the end of the full page.

   Number of partial pages =
   Number of data bytes per page /
   Number of data bytes per partial page

4. Data Interface and Timing

4.1. Data Interface Types

ONFI supports two different data interface types: asynchronous and source synchronous. The asynchronous data interface is the traditional NAND interface that uses RE# to latch data read, WE# to latch data written, and does not include a clock. The source synchronous data interface includes a clock that indicates where commands and addresses should be latched and a data strobe that indicates where data should be latched.

On power-up, the device shall operate in asynchronous data interface timing mode 0. After the host determines that the source synchronous data interface is supported in the parameter page, the host may select a source synchronous timing mode by using Set Features with a Feature Address of 01h. Refer to section 5.22.1.

The source synchronous data interface uses a DDR protocol. Thus, an even number of bytes is always transferred. The least significant bit of the column address shall always be zero in the source synchronous data interface. If the least significant bit of the column address is set to one in the source synchronous data interface then the results are indeterminate.

4.1.1. Signal Function Reassignment

The function of some signals is different when using the asynchronous data interface versus when using the source synchronous data interface. When source synchronous is selected, the function of RE# and WE# is modified and DQS is enabled.

WE# becomes the clock signal (CLK) when in source synchronous mode. CLK shall be enabled with a valid clock period whenever a command cycle, address cycle, or data cycle is occurring. CLK shall maintain the same frequency while CE# is driven to zero. Refer to section 4.2.3.

RE# becomes the write/read direction signal (W/R#) when in source synchronous mode. This signal indicates the owner of the DQ data bus and the DQS signal. The host shall only transition W/R# when ALE and CLE are latched to zero.

The I/O bus is renamed to the DQ bus in the source synchronous interface.

A strobe signal for the DQ data bus is used in source synchronous mode, called DQS (DQ strobe). DQS is bi-directional and is used for all data transfers. DQS is not used for command or address cycles. The latching edge of DQS is center aligned to the valid data window for data transfers from the host to the device (writes). The latching edge of DQS is aligned to the transition of the DQ bus for data transfers from the device to the host (reads). DQS should be pulled high by the host and shall be ignored by the device when operating in the asynchronous data interface.

When W/R# changes from one to zero, the host shall tri-state the DQ bus and the DQS signal and then the device shall drive DQS to zero. When W/R# changes from zero to one, the device shall tri-state the DQ bus and the DQS signal. DQS and the DQ bus should be driven high by the host during idle when no data operations are outstanding and W/R# is set to one. There is a turn-around time whenever W/R# changes its value where the DQS signal is tri-stated (as neither the host nor the device is driving the signal), see section 4.3.2.5.

Symbol		Type	Description
Asynchronous	**Source synchronous**		
ALE	ALE	Input	Address latch enable
CE#	CE#	Input	Chip enable
CLE	CLE	Input	Command latch enable
I/O[7:0]	DQ[7:0]	I/O	Data inputs/outputs
—	DQS	I/O	Data strobe
RE#	W/R#	Input	Read enable / (Write / Read# direction)
WE#	CLK	Input	Write enable / Clock
WP#	WP#	Input	Write protect
R/B#	R/B#	Output	Ready / Busy#

Table 11 Signal Reassignments between Data Interface Types

4.1.2. Bus State

ALE and CLE are used to determine the current bus state in asynchronous and source synchronous data interfaces. Table 12 describes the bus state for asynchronous. Note that in asynchronous the value 11b for ALE/CLE is undefined.

CE#	ALE	CLE	WE#	RE#	Asynchronous Bus State
1	X	X	X	X	Standby
0	0	0	1	1	Idle
0	0	1	0	1	Command cycle
0	1	0	0	1	Address cycle
0	0	0	0	1	Data input cycle
0	0	0	1	0	Data output cycle
0	1	1	X	X	Undefined

Table 12 ALE/CLE value and asynchronous bus state

Table 13 describes the bus state for source synchronous. In source synchronous the value 11b for ALE/CLE is used for data transfers. The bus state lasts for an entire CLK period, starting with the rising edge of CLK. Thus, for data cycles there are two data input cycles or two data output cycles per bus state. The idle bus state is used to terminate activity on the DQ bus after a command cycle, an address cycle, or a stream of data.

The value of CE# shall only change when the source synchronous bus state is idle (i.e. ALE and CLE are both cleared to zero) and no data is being transmitted during that clock period.

CE#	ALE	CLE	W/R#	CLK	Source Synchronous Bus State
1	X	X	X	X	Standby
0	0	0	X	Rising edge to rising edge	Idle[1]
0	0	1	1	Rising edge to rising edge	Command cycle
0	1	0	1	Rising edge to rising edge	Address cycle
0	1	1	1	Rising edge to rising edge	Data input cycle
0	1	1	0	Rising edge to rising edge	Data output cycle
0	0	1	0	Rising edge to rising edge	Reserved
0	1	0	0	Rising edge to rising edge	Reserved

NOTE:
1. When W/R# is cleared to '0', the device is driving the DQ bus and DQS signal. When W/R# is set to '1' then the DQ and DQS signals are not driven by the device.

Table 13 ALE/CLE value and source synchronous bus state

4.1.2.1. Pausing Data Input/Output

The host may pause data input or data output by inserting Idle cycles.

In the asynchronous data interface, pausing data input or data output is done by not toggling WE# or RE#, respectively.

In the source synchronous data interface, pausing data input or data output is done by clearing ALE and CLE both to zero. The host may continue data transfer by setting ALE and CLE both to one after the applicable tCAD time has passed.

4.1.3. Source Synchronous and Repeat Bytes

The source synchronous interface uses DDR to achieve a high data transfer rate. However, certain configuration and settings commands are not often used and do not require a high data transfer rate. Additionally, these commands typically are not serviced by the pipeline used for data transfers.

To avoid adding unnecessary complexity and requirements to implementations for these commands, the data is transferred using single data rate. Specifically, the same data byte is repeated twice and shall conform to the timings required for the source synchronous data interface. The data pattern in these cases is D_0 D_0 D_1 D_1 D_2 D_2 etc. The receiver (host or device) shall only latch one copy of each data byte.

The commands that repeat each data byte twice in the source synchronous data interface are: Set Features, Read ID, Get Features, Read Status, and Read Status Enhanced.

4.1.4. Data Interface / Timing Mode Transitions

4.1.4.1. Asynchronous to Source Synchronous

To transition from an asynchronous timing mode to a source synchronous timing mode, the procedure described in this section shall be followed. The Set Features command is used to change the data interface and timing mode. The Set Features command (EFh), Feature Address, and the four parameters are entered using the previously selected timing mode in the asynchronous data interface. When issuing the Set Features command, the host shall drive the DQS signal high. After the fourth parameter, P4, is entered until the tITC time has passed the host shall not issue any commands to the device.

Prior to issuing any new commands to the device, the host shall transition CE# high. When CE# is high, the host selects the new CLK rate. After issuing the Set Features command and prior to transitioning CE# high, the host shall observe the following requirements:

- ALE and CLE shall be cleared to zero
- RE# / W/R# shall be set to one
- WE# / CLK shall be set to one
- DQS shall be set to one

4.1.4.2. Source Synchronous to Source Synchronous

To transition from a source synchronous timing mode to another source synchronous timing mode, the procedure described in this section shall be followed. The Set Features command is used to change the timing mode. The Set Features command (EFh), Feature Address, and the four parameters are entered using the previously selected timing mode in the source synchronous data interface. After the fourth parameter, P4, is entered until the tITC time has passed the host shall not issue any commands to the device.

Prior to issuing any new commands to the device, the host shall transition CE# high. When CE# is high, the host selects the new CLK rate. After issuing the Set Features command and prior to transitioning CE# high, the host shall observe the following requirements:

- ALE and CLE shall be cleared to zero
- W/R# shall be set to one
- CLK shall continue running at the previously selected speed grade

4.1.4.3. Source Synchronous to Asynchronous

To transition from a source synchronous timing mode to an asynchronous timing mode, the procedure described in this section shall be followed. To transition from the source synchronous data interface to the asynchronous data interface, the Reset (FFh) command shall be used. After the Reset is issued, the host shall not issue any commands to the device until after the tITC time has passed. Note that after the tITC time has passed, only status commands may be issued by the host until the Reset completes.

The host shall transition to the asynchronous data interface. Then the host shall issue the Reset (FFh) command described in the previous paragraph using asynchronous timing mode 0, thus the host transitions to the asynchronous data interface prior to issuing the Reset (FFh). A device in any timing mode is required to recognize a Reset (FFh) command issued in asynchronous timing mode 0. After issuing the Reset (FFh) and prior to transitioning CE# high, the host shall observe the following requirements:

- ALE and CLE shall be cleared to zero
- RE# / W/R# shall be set to one
- WE# / CLK shall be set to one

After CE# has been pulled high and then transitioned low again, the host should issue a Set Features to select the appropriate asynchronous timing mode.

4.2. Timing Parameters

All timing parameters are from a host perspective. For example, the “Minimum WE# pulse width” is the minimum allowed WE# pulse width that the host is permitted to present to the device while still assuring correct operation of the device. The behavior of the device when the required host minimum and maximum times are not adhered to is undefined. Note that the host needs to account for channel effects in meeting the specified timings with the device.

4.2.1. General Timings

This section describes timing parameters that apply regardless of the data interface type being used.

For execution of the first Read Parameter Page command, prior to complete initialization, a tR value of 200 microseconds and tCCS value of 500 ns shall be used. For page reads, including execution of additional Read Parameter Page commands after initialization is complete, the value for tR and tCCS contained in the parameter page shall be used.

There are three maximums listed for tRST in the asynchronous and source synchronous data interfaces. The target is allowed a longer maximum reset time when a program or erase operation is in progress. The maximums correspond to:

1. The target is not performing an erase or program operation.
2. The target is performing a program operation.
3. The target is performing an erase operation.

Table 14 defines the array timing parameters. The array timing parameter values are either returned in the parameter page (tR, tPROG, tBERS, and tCCS) or they are statically defined in Table 15.

.

Parameter	Description
tBERS[1]	Block erase time
tCCS	Change Column setup time
tIEBSY[1]	Busy time for interleaved erase operation
tIPBSY[1]	Busy time for interleaved program operation
tPCBSY	Program cache busy time
tPROG[1]	Page program time
tR[1]	Page read time
tRCBSY[1]	Read cache busy time
NOTE: 1. Measured from the falling edge of SR[6] to the rising edge of SR[6].	

Table 14 Array Timing Parameter Descriptions

There are “short” busy times associated with cache operations (tRCBSY, tPCBSY) and interleaved operations (tIEBSY and tIPBSY). Typical and maximum times for these busy times are listed in Table 15.

Parameter	Typical	Maximum
tIEBSY	500 ns	tBERS
tIPBSY	500 ns	tPROG
tPCBSY	3 µs	tPROG
tRCBSY	3 µs	tR

Table 15 Cache and Interleave Short Busy Times

4.2.2. Asynchronous

Table 16 defines the descriptions of all timing parameters. Table 18 and Table 19 define the requirements for timing modes 0, 1, 2, 3, 4, and 5. Timing mode 0 shall always be supported and the device operates in this mode at power-on. A host shall only begin use of a more advanced timing mode after determining that the device supports that timing mode in Read Parameter Page.

The host shall use EDO data output cycle timings, as defined in section 4.3.1.5, when running with a tRC value less than 30 ns.

Parameter	Description
tADL	ALE to data loading time
tALH	ALE hold time
tALS	ALE setup time
tAR	ALE to RE# delay
tCEA	CE# access time
tCH	CE# hold time
tCHZ	CE# high to output hi-Z
tCLH	CLE hold time
tCLR	CLE to RE# delay
tCLS	CLE setup time
tCOH	CE# high to output hold
tCS	CE# setup time
tDH	Data hold time
tDS	Data setup time
tFEAT[1]	Busy time for Set Features and Get Features
tIR	Output hi-Z to RE# low
tITC[1]	Interface and Timing Mode Change time
tRC	RE# cycle time
tREA	RE# access time
tREH	RE# high hold time
tRHOH	RE# high to output hold
tRHW	RE# high to WE# low
tRHZ	RE# high to output hi-Z
tRLOH	RE# low to output hold
tRP	RE# pulse width
tRR	Ready to RE# low (data only)
tRST	Device reset time, measured from the rising edge of WE# to the rising edge of R/B#.
tWB	WE# high to SR[6] low
tWC	WE# cycle time
tWH	WE# high hold time
tWHR	WE# high to RE# low
tWP	WE# pulse width
tWW	WP# transition to WE# low

NOTE:
1. Measured from the falling edge of SR[6] to the rising edge of SR[6].

Table 16 Asynchronous Timing Parameter Descriptions

The testing conditions that shall be used to verify that a device complies with a particular asynchronous timing mode are listed in Table 17.

Parameter	Value
Input pulse levels	0.0 V to VccQ
Input rise and fall times	5 ns
Input and output timing levels	VccQ / 2
Output load for VccQ of 3.3V	1 TTL gate and CL = 50 pF
Output load for VccQ of 1.8V	1 TTL gate and CL = 30 pF

Table 17 Testing Conditions for Asynchronous Timing Modes

Parameter	Mode 0		Mode 1		Mode 2		Unit
	100		50		35		ns
	Min	Max	Min	Max	Min	Max	
tADL	200	—	100	—	100	—	ns
tALH	20	—	10	—	10	—	ns
tALS	50	—	25	—	15	—	ns
tAR	25	—	10	—	10	—	ns
tCEA	—	100	—	45	—	30	ns
tCH	20	—	10	—	10	—	ns
tCHZ	—	100	—	50	—	50	ns
tCLH	20	—	10	—	10	—	ns
tCLR	20	—	10	—	10	—	ns
tCLS	50	—	25	—	15	—	ns
tCOH	0	—	15	—	15	—	ns
tCS	70	—	35	—	25	—	ns
tDH	20	—	10	—	5	—	ns
tDS	40	—	20	—	15	—	ns
tFEAT	—	1	—	1	—	1	µs
tIR	10	—	0	—	0	—	ns
tITC	—	1	—	1	—	1	µs
tRC	100	—	50	—	35	—	ns
tREA	—	40	—	30	—	25	ns
tREH	30	—	15	—	15	—	ns
tRHOH	0	—	15	—	15	—	ns
tRHW	200	—	100	—	100	—	ns
tRHZ	—	200	—	100	—	100	ns
tRLOH	0	—	0	—	0	—	ns
tRP	50	—	25	—	17	—	ns
tRR	40	—	20	—	20	—	ns
tRST	—	1000	—	5/10/ 500	—	5/10/ 500	µs
tWB	—	200	—	100	—	100	ns
tWC	100	—	45	—	35	—	ns
tWH	30	—	15	—	15	—	ns
tWHR	120	—	80	—	80	—	ns
tWP	50	—	25	—	17	—	ns
tWW	100	—	100	—	100	—	ns

NOTE:
1. To easily support EDO capable devices, tCHZ and tRHZ maximums are higher in modes 1, 2, and 3 than typically necessary for a non-EDO capable device.

Table 18 Asynchronous Timing Modes 0, 1, and 2

Parameter	Mode 3		Mode 4 (EDO capable)		Mode 5 (EDO capable)		Unit
	30		25		20		ns
	Min	Max	Min	Max	Min	Max	
tADL	100	—	70	—	70	—	ns
tALH	5	—	5	—	5	—	ns
tALS	10	—	10	—	10	—	ns
tAR	10	—	10	—	10	—	ns
tCEA	—	25	—	25	—	25	ns
tCH	5	—	5	—	5	—	ns
tCHZ	—	50	—	30	—	30	ns
tCLH	5	—	5	—	5	—	ns
tCLR	10	—	10	—	10	—	ns
tCLS	10	—	10	—	10	—	ns
tCOH	15	—	15	—	15	—	ns
tCS	25	—	20	—	15	—	ns
tDH	5	—	5	—	5	—	ns
tDS	10	—	10	—	7	—	ns
tFEAT	—	1	—	1	—	1	µs
tIR	0	—	0	—	0	—	ns
tITC	—	1	—	1	—	1	µs
tRC	30	—	25	—	20	—	ns
tREA	—	20	—	20	—	16	ns
tREH	10	—	10	—	7	—	ns
tRHOH	15	—	15	—	15	—	ns
tRHW	100	—	100	—	100	—	ns
tRHZ	—	100	—	100	—	100	ns
tRLOH	0	—	5	—	5	—	ns
tRP	15	—	12	—	10	—	ns
tRR	20	—	20	—	20	—	ns
tRST	—	5/10/ 500	—	5/10/ 500	—	5/10/ 500	µs
tWB	—	100	—	100	—	100	ns
tWC	30	—	25	—	20	—	ns
tWH	10	—	10	—	7	—	ns
tWHR	60	—	60	—	60	—	ns
tWP	15	—	12	—	10	—	ns
tWW	100	—	100	—	100	—	ns

NOTE:
1. To easily support EDO capable devices, tCHZ and tRHZ maximums are higher in modes 1, 2, and 3 than typically necessary for a non-EDO capable device.

Table 19 Asynchronous Timing Modes 3, 4, and 5

4.2.3. Source Synchronous

All source synchronous timing parameters are referenced to the rising edge of CLK or the latching edge of DQS. Note that R/B# and WP# are always asynchronous signals.

If CLK is a different frequency than those described in the source synchronous timing modes, then the host shall meet the setup and hold requirements for the next fastest timing mode.

For parameters measured in clocks (e.g. tDSH), the parameter is measured starting from a latching edge of CLK or DQS, respectively.

Parameter	Description
tAC	Access window of DQ[7:0] from CLK
tADL	Address cycle to data loading time
tCADf, tCADs	Command, Address, Data delay (command to command, address to address, command to address, address to command, command/address to start of data)
tCAH	Command/address DQ hold time
tCALH	CLE and ALE hold time
tCALS	CLE and ALE setup time
tCAS	Command/address DQ setup time
tCCS	Change Column setup time
tCH	CE# hold time
tCK(avg)[2]	Average clock cycle time, also known as tCK
tCK(abs)	Absolute clock period, measured from rising edge to the next consecutive rising edge
tCKH(abs) [3]	Clock cycle high
tCKL(abs) [3]	Clock cycle low
tCS	CE# setup time
tDH	Data DQ hold time
tDQSCK	Access window of DQS from CLK
tDQSD	W/R# low to DQS/DQ driven by device
tDQSH	DQS input high pulse width
tDQSHZ	W/R# high to DQS/DQ tri-state by device
tDQSL	DQS input low pulse width
tDQSQ	DQS-DQ skew, DQS to last DQ valid, per access
tDQSS	Data input to first DQS latching transition
tDS	Data DQ setup time
tDSH	DQS falling edge to CLK rising – hold time
tDSS	DQS falling edge to CLK rising – setup time
tDVW	Output data valid window
tFEAT[1]	Busy time for Set Features and Get Features
tHP	Half-clock period

tITC[1]	Interface and Timing Mode Change time
tJIT(per)	The deviation of a given tCK(abs) from tCK(avg)
tQH	DQ-DQS hold, DQS to first DQ to go non-valid, per access
tQHS	Data hold skew factor
tRHW	Data output cycle to command, address, or data input cycle
tRR	Ready to data output cycle (data only)
tRST	Device reset time, measured from the rising edge of CLK to the rising edge of R/B#.
tWB	CLK rising edge to SR[6] low
tWHR	Command, address or data input cycle to data output cycle
tWPRE	DQS write preamble
tWPST	DQS write postamble
tWRCK	W/R# low to data output cycle
tWW	WP# transition to command cycle

NOTE:
1. Measured from the falling edge of SR[6] to the rising edge of SR[6].
2. tCK(avg) is the average clock period over any consecutive 200 cycle window.
3. tCKH(abs) and tCKL(abs) include static offset and duty cycle jitter.

Table 20 Source Synchronous Timing Parameter Descriptions

The device may be configured with multiple driver strengths with the Set Features command. There is an Underdrive, Nominal, Overdrive 1, and Overdrive 2 setting that the device may support. Support for all four driver strength settings is required for devices that support the source synchronous data interface.

Setting	Driver Strength	VccQ
Overdrive 2	2.0x = 18 Ohms	3.3V
Overdrive 1	1.4x = 25 Ohms	
Nominal	1.0x = 35 Ohms	
Underdrive	0.7x = 50 Ohms	
Overdrive 2	2.0x = 18 Ohms	1.8V
Overdrive 1	1.4x = 25 Ohms	
Nominal	1.0x = 35 Ohms	
Underdrive	0.7x = 50 Ohms	

Table 21 I/O Drive Strength Settings

The impedance values correspond to several different VccQ values are defined in Table 23 for 3.3V VccQ and Table 24 for 1.8V VccQ. The test conditions that shall be used to verify the impedance values is specified in Table 22.

Condition	Temperature (TA)	VccQ (3.3V)	VccQ (1.8V)	Process
Minimum Impedance	TOPER (Min) degrees Celcius	3.6V	1.95V	Fast-fast
Nominal Impedance	25 degrees Celcius	3.3V	1.8V	Typical
Maximum impedance	TOPER (Max) degrees Celcius	2.7V	1.7V	Slow-slow

Table 22 Testing Conditions for Impedance Values

Overdrive 2, R_{ON} = 18 Ohms					
Description	**VOUT to VssQ**	**Maximum**	**Nominal**	**Minimum**	**Unit**
R_pulldown	0.2 x VccQ	18.0	10.0	6.0	Ohms
	0.5 x VccQ	35.0	18.0	10.0	Ohms
	0.8 x VccQ	49.0	25.0	15.0	Ohms
R_pullup	0.2 x VccQ	49.0	25.0	15.0	Ohms
	0.5 x VccQ	35.0	18.0	10.0	Ohms
	0.8 x VccQ	18.0	10.0	6.0	Ohms
Overdrive 1, R_{ON} = 25 Ohms					
Description	**VOUT to VssQ**	**Maximum**	**Nominal**	**Minimum**	**Unit**
R_pulldown	0.2 x VccQ	30.0	15.0	8.0	Ohms
	0.5 x VccQ	45.0	25.0	15.0	Ohms
	0.8 x VccQ	65.0	35.0	20.0	Ohms
R_pullup	0.2 x VccQ	65.0	35.0	20.0	Ohms
	0.5 x VccQ	45.0	25.0	15.0	Ohms
	0.8 x VccQ	30.0	15.0	8.0	Ohms
Nominal, R_{ON} = 35 Ohms					
Description	**VOUT to VssQ**	**Maximum**	**Nominal**	**Minimum**	**Unit**
R_pulldown	0.2 x VccQ	40.0	22.0	12.0	Ohms
	0.5 x VccQ	65.0	35.0	20.0	Ohms
	0.8 x VccQ	100.0	50.0	25.0	Ohms
R_pullup	0.2 x VccQ	100.0	50.0	25.0	Ohms
	0.5 x VccQ	65.0	35.0	20.0	Ohms
	0.8 x VccQ	40.0	22.0	12.0	Ohms
Underdrive, R_{ON} = 50 Ohms					
Description	**VOUT to VssQ**	**Maximum**	**Nominal**	**Minimum**	**Unit**
R_pulldown	0.2 x VccQ	55.0	32.0	18.0	Ohms
	0.5 x VccQ	100.0	50.0	29.0	Ohms
	0.8 x VccQ	150.0	75.0	40.0	Ohms
R_pullup	0.2 x VccQ	150.0	75.0	40.0	Ohms
	0.5 x VccQ	100.0	50.0	29.0	Ohms
	0.8 x VccQ	55.0	32.0	18.0	Ohms

Table 23 Impedance Values for 3.3V VccQ

Overdrive 2, R_{ON} = 18 Ohms					
Description	**VOUT to VssQ**	**Maximum**	**Nominal**	**Minimum**	**Unit**
R_pulldown	0.2 x VccQ	34.0	13.5	7.5	Ohms
	0.5 x VccQ	31.0	18.0	9.0	Ohms
	0.8 x VccQ	44.0	23.5	11.0	Ohms
R_pullup	0.2 x VccQ	44.0	23.5	11.0	Ohms
	0.5 x VccQ	31.0	18.0	9.0	Ohms
	0.8 x VccQ	34.0	13.5	7.5	Ohms
Overdrive 1, R_{ON} = 25 Ohms					
Description	**VOUT to VssQ**	**Maximum**	**Nominal**	**Minimum**	**Unit**
R_pulldown	0.2 x VccQ	47.0	19.0	10.5	Ohms
	0.5 x VccQ	44.0	25.0	13.0	Ohms
	0.8 x VccQ	61.5	32.5	16.0	Ohms
R_pullup	0.2 x VccQ	61.5	32.5	16.0	Ohms
	0.5 x VccQ	44.0	25.0	13.0	Ohms
	0.8 x VccQ	47.0	19.0	10.5	Ohms
Nominal, R_{ON} = 35 Ohms					
Description	**VOUT to VssQ**	**Maximum**	**Nominal**	**Minimum**	**Unit**
R_pulldown	0.2 x VccQ	66.5	27.0	15.0	Ohms
	0.5 x VccQ	62.5	35.0	18.0	Ohms
	0.8 x VccQ	88.0	52.0	22.0	Ohms
R_pullup	0.2 x VccQ	88.0	52.0	22.0	Ohms
	0.5 x VccQ	62.5	35.0	18.0	Ohms
	0.8 x VccQ	66.5	27.0	15.0	Ohms
Underdrive, R_{ON} = 50 Ohms					
Description	**VOUT to VssQ**	**Maximum**	**Nominal**	**Minimum**	**Unit**
R_pulldown	0.2 x VccQ	95.0	39.0	21.5	Ohms
	0.5 x VccQ	90.0	50.0	26.0	Ohms
	0.8 x VccQ	126.5	66.5	31.5	Ohms
R_pullup	0.2 x VccQ	126.5	66.5	31.5	Ohms
	0.5 x VccQ	90.0	50.0	26.0	Ohms
	0.8 x VccQ	95.0	39.0	21.5	Ohms

Table 24 Impedance Values for 1.8V VccQ

The pull-up and pull-down impedance mismatch is defined in Table 25. Impedance mismatch is the absolute value between pull-up and pull-down impedances. Both are measured at the same temperature and voltage. The testing conditions that shall be used to verify the impedance mismatch requirements are: VccQ = VccQ(min), VOUT = VccQ x 0.5, and T_A is across the full operating range.

Output Impedance	Maximum	Minimum	Unit
Overdrive 2	6.3	0.0	Ohms
Overdrive 1	8.8	0.0	Ohms
Nominal	12.3	0.0	Ohms
Underdrive	17.5	0.0	Ohms

Table 25 Pull-up and Pull-down Impedance Mismatch

The input slew rate requirements that the device shall comply with are defined in Table 26. The testing conditions that shall be used to verify the input slew rate are listed in Table 27.

Description	Timing Mode				Unit
	0	1	2	3	
Input slew rate (min)	0.5	0.5	0.5	0.5	V/ns
Input slew rate (max)	4.5	4.5	4.5	4.5	V/ns
Derating factor for setup times	TBD	TBD	TBD	TBD	ns per 100 mV
Derating factor for hold times	TBD	TBD	TBD	TBD	ns per 100 mV

Table 26 Input Slew Rate Requirements

Parameter	Value
Positive input transition	VIL (DC) to VIH (AC)
Negative input transition	VIH (DC) to VIL (AC)

Table 27 Testing Conditions for Input Slew Rate

The output slew rate requirements that the device shall comply with are defined in Table 28 and Table 29 for a single LUN per 8-bit data bus. The testing conditions that shall be used to verify the output slew rate are listed in Table 30.

Description	Output Slew Rate		Unit	Normative or Recommended
	Min	Max		
Overdrive 2	1.5	10.0	V/ns	Normative
Overdrive 1	1.5	9.0	V/ns	Normative
Nominal	1.2	7.0	V/ns	Normative
Underdrive	1.0	5.5	V/ns	Recommended

Table 28 Output Slew Rate Requirements for 3.3V VccQ

Description	Output Slew Rate		Unit	Normative or Recommended
	Min	Max		
Overdrive 2	1.0	5.5	V/ns	Normative
Overdrive 1	0.85	5.0	V/ns	Normative
Nominal	0.75	4.0	V/ns	Normative
Underdrive	0.60	4.0	V/ns	Recommended

Table 29 Output Slew Rate Requirements for 1.8V VccQ

Parameter	Value
Positive input transition	VIL (DC) to VIH (AC)
Negative input transition	VIH (DC) to VIL (AC)
Output capacitive load	CL = 5 pF

Table 30 Testing Conditions for Output Slew Rate

The testing conditions that shall be used to verify that a device complies with a particular source synchronous timing mode are listed in Table 31. The test conditions are the same regardless of the number of LUNs per Target.

Parameter	Value
Positive input transition	VIL (DC) to VIH (AC)
Negative input transition	VIH (DC) to VIL (AC)
Minimum input slew rate	tIS = 1.0 V/ns
Input timing levels	VccQ / 2
Output timing levels	VccQ / 2
Driver strength	Nominal
Output capacitive load[1]	CL = 5 pF
NOTE: 1. Assumes small propagation delay from output to CL.	

Table 31 Testing Conditions for Source Synchronous Timing Modes

The input capacitance requirements are defined in Table 32. The testing conditions that shall be used to verify the input capacitance requirements are: temperature of 25 degrees Celcius, V_{IN} = 0V, and a CLK frequency of 100 MHz. The capacitance delta values measure the pin-to-pin capacitance for the same LUN within a Target.

Parameter	Symbol	Source Synchronous Timing Modes 0-3		Unit
		Min	Max	
Input capacitance, CLK	CCK	Typical - 0.5 pF	Typical + 0.5 pF	pF
Input capacitance delta, CLK	DCCK	x	0.25	pF
Input capacitance, inputs	CIN	Typical - 0.5 pF	Typical + 0.5 pF	pF
Input capacitance delta, inputs	DCIN	x	0.5	pF
Input capacitance, I/O	CIO	Typical - 0.5 pF	Typical + 0.5 pF	pF
Input capacitance delta, I/O	DCIO	x	0.5	pF
Input capacitance, CE#, WP#	COTHER	x	5.0	pF

NOTE:

1. Typical capacitance values for CCK, CIN, and CIO are specified in the parameter page. The allowable range for Typical capacitance values is specified in Table 33 for CLK and input pins and Table 34 for I/O pins.

Table 32 Input Capacitance, Minimum and Maximums

The Typical capacitance values shall be constrained to the ranges defined in Table 33 for CLK and input pins and Table 34 for I/O pins for devices in a BGA package. Capacitance is shared for LUNs that share the same 8-bit data bus in the same package, thus the ranges are specific to the number of LUNs per data bus.

Parameter	Source Synchronous Timing Modes 0-3				Typ Variance	Unit
	Min	Typ Low	Typ High	Max		
1 LUN per x8 data bus	2.5	3.0	4.0	4.5	±0.5	pF
2 LUNs per x8 data bus	3.8	4.8	6.8	7.8	±1.0	pF
4 LUNs per x8 data bus	6.3	8.3	12.3	14.3	±2.0	pF
8 LUNs per x8 data bus	11.3	15.3	23.3	27.3	±4.0	pF

Table 33 Input Capacitance for CLK and input pins, Typical Ranges

Parameter	Source Synchronous Timing Modes 0-3				Typ Variance	Unit
	Min	Typ Low	Typ High	Max		
1 LUN per x8 data bus	3.0	3.5	4.5	5.0	±0.5	pF
2 LUNs per x8 data bus	5.0	6.0	8.0	9.0	±1.0	pF
4 LUNs per x8 data bus	8.9	10.9	14.9	16.9	±2.0	pF
8 LUNs per x8 data bus	16.7	20.7	28.7	32.7	±4.0	pF

Table 34 Input Capacitance for I/O pins, Typical Ranges

Table 35 describes the standard source synchronous timing modes. The host is not required to have a clock period that exactly matches any of the clock periods listed for the standard timing modes. The host shall meet the setup and hold times for the timing mode selected. If the host selects timing mode **n** using Set Features, then its clock period shall be faster than the clock period of timing mode **n-1** and slower than or equal to the clock period of timing mode **n**. For example, if the host selects timing mode 2, then the following equation shall hold:

30 ns > host clock period >= 20 ns

If timing mode 0 is selected, then the clock period shall be no slower than 100 ns. The only exception to this requirement is when the host is issuing a Reset (FFh) in asynchronous timing mode 0 (see section 4.1.4.3).

Timing parameters that indicate a latency requirement before a data input, data output, address or command cycle shall be satisfied to the rising clock edge after the latency in nanoseconds has elapsed. To calculate the first edge where the associated transition may be made, it is calculated as follows:

= RoundUp{[tParam + tCK] / tCK}

Parameter	Mode 0		Mode 1		Mode 2		Mode 3		Unit
	50		30		20		15		ns
	~20		~33		~50		~66		MHz
	Min	Max	Min	Max	Min	Max	Min	Max	
tAC	—	20	—	20	—	20	—	20	ns
tADL	100	—	100	—	70	—	70	—	ns
tCADf	25	—	25	—	25	—	25	—	ns
tCADs	45	—	45	—	45	—	45	—	ns
tCAH	10	—	5	—	4	—	3	—	ns
tCALH	10	—	5	—	4	—	3	—	ns
tCALS	10	—	5	—	4	—	3	—	ns
tCAS	10	—	5	—	4	—	3	—	ns
tCH	10	—	5	—	4	—	3	—	ns
tCK(avg) or tCK	50	—	30	—	20	—	15	—	ns
tCK(abs)	Minimum: tCK(avg) + tJIT(per) min Maximum: tCK(avg) + tJIT(per) max								ns
tCKH(abs)	0.43	0.57	0.43	0.57	0.43	0.57	0.43	0.57	tCK
tCKL(abs)	0.43	0.57	0.43	0.57	0.43	0.57	0.43	0.57	tCK
tCS	35	—	25	—	15	—	15	—	ns
tDH	5	—	2.5	—	1.7	—	1.3	—	ns
tDQSCK	—	20	—	20	—	20	—	20	ns
tDQSD	—	20	—	20	—	20	—	20	ns
tDQSH	0.4	0.6	0.4	0.6	0.4	0.6	0.4	0.6	tCK
tDQSHZ	—	20	—	20	—	20	—	20	ns
tDQSL	0.4	0.6	0.4	0.6	0.4	0.6	0.4	0.6	tCK
tDQSQ	—	5	—	2.5	—	1.7	—	1.3	ns
tDQSS	0.75	1.25	0.75	1.25	0.75	1.25	0.75	1.25	tCK
tDS	5	—	3	—	2	—	1.5	—	ns
tDSH	0.2	—	0.2	—	0.2	—	0.2	—	tCK
tDSS	0.2	—	0.2	—	0.2	—	0.2	—	tCK
tDVW	tDVW = tQH – tDQSQ								ns
tFEAT	—	1	—	1	—	1	—	1	µs
tHP	tHP = min(tCKL, tCKH)								ns
tITC	—	1	—	1	—	1	—	1	µs
tJIT(per)	0.7	0.7	0.7	0.7	0.7	0.7	0.6	0.6	ns
tQH	tQH = tHP – tQHS								ns
tQHS	—	6	—	3	—	2	—	1.5	ns
tRHW	100	—	100	—	100	—	100	—	ns
tRR	20	—	20	—	20	—	20	—	ns
tRST	—	5/10/500	—	5/10/500	—	5/10/500	—	5/10/500	µs
tWB	—	100	—	100	—	100	—	100	ns

tWHR	80	—	60	—	60	—	60	—	ns
tWPRE	1.5	—	1.5	—	1.5	—	1.5	—	tCK
tWPST	1.5	—	1.5	—	1.5	—	1.5	—	tCK
tWRCK	20	—	20	—	20	—	20	—	ns
tWW	100	—	100	—	100	—	100	—	ns

NOTE:
1. tDQSHZ is not referenced to a specific voltage level, but specifies when the device output is no longer driving.
2. tCK(avg) is the average clock period over any consecutive 200 cycle window.
3. tCKH(abs) and tCKL(abs) include static offset and duty cycle jitter.

Table 35 Source Synchronous Timing Modes

4.3. Timing Diagrams

4.3.1. Asynchronous

4.3.1.1. Command Latch Timings

The requirements for the R/B# signal only apply to commands where R/B# is cleared to zero after the command is issued, as specified in the command definitions.

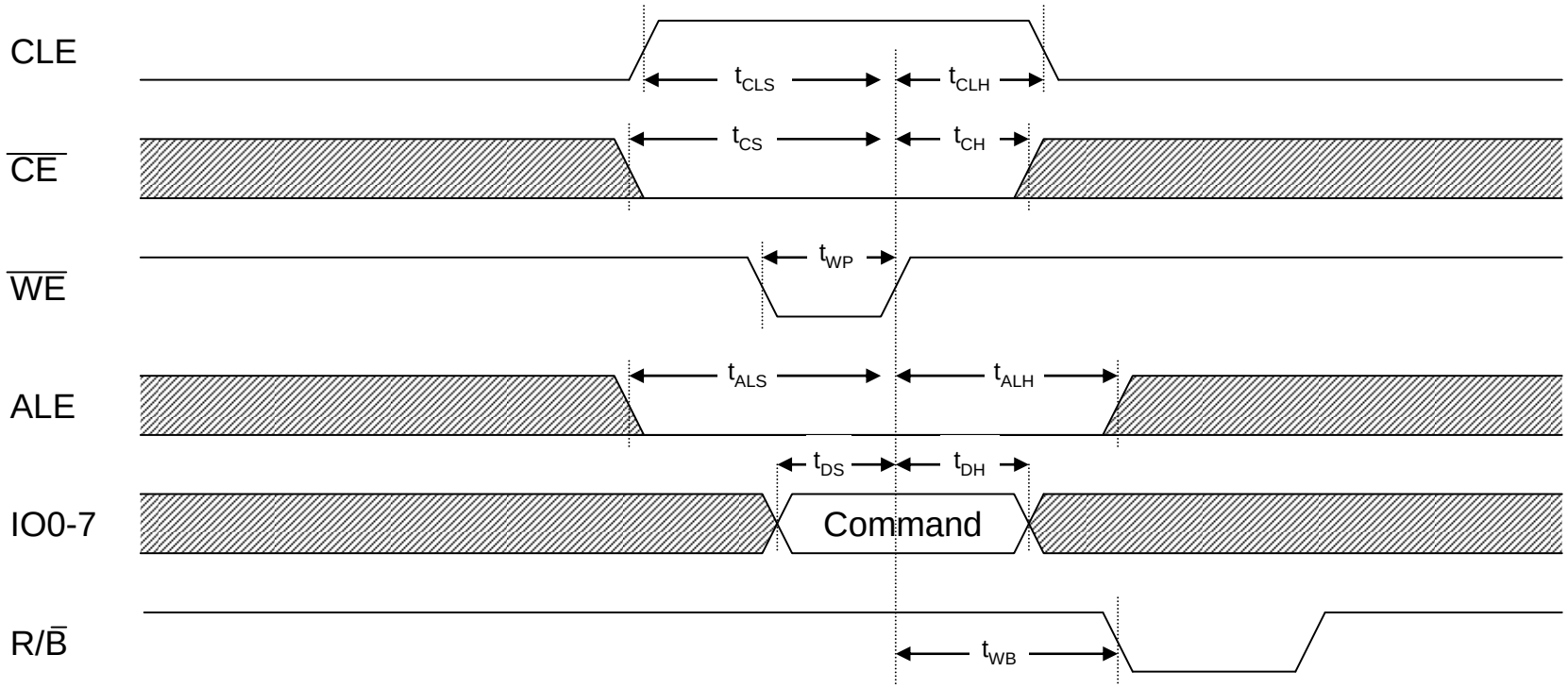

Figure 21 Command latch timings

4.3.1.2. Address Latch Timings

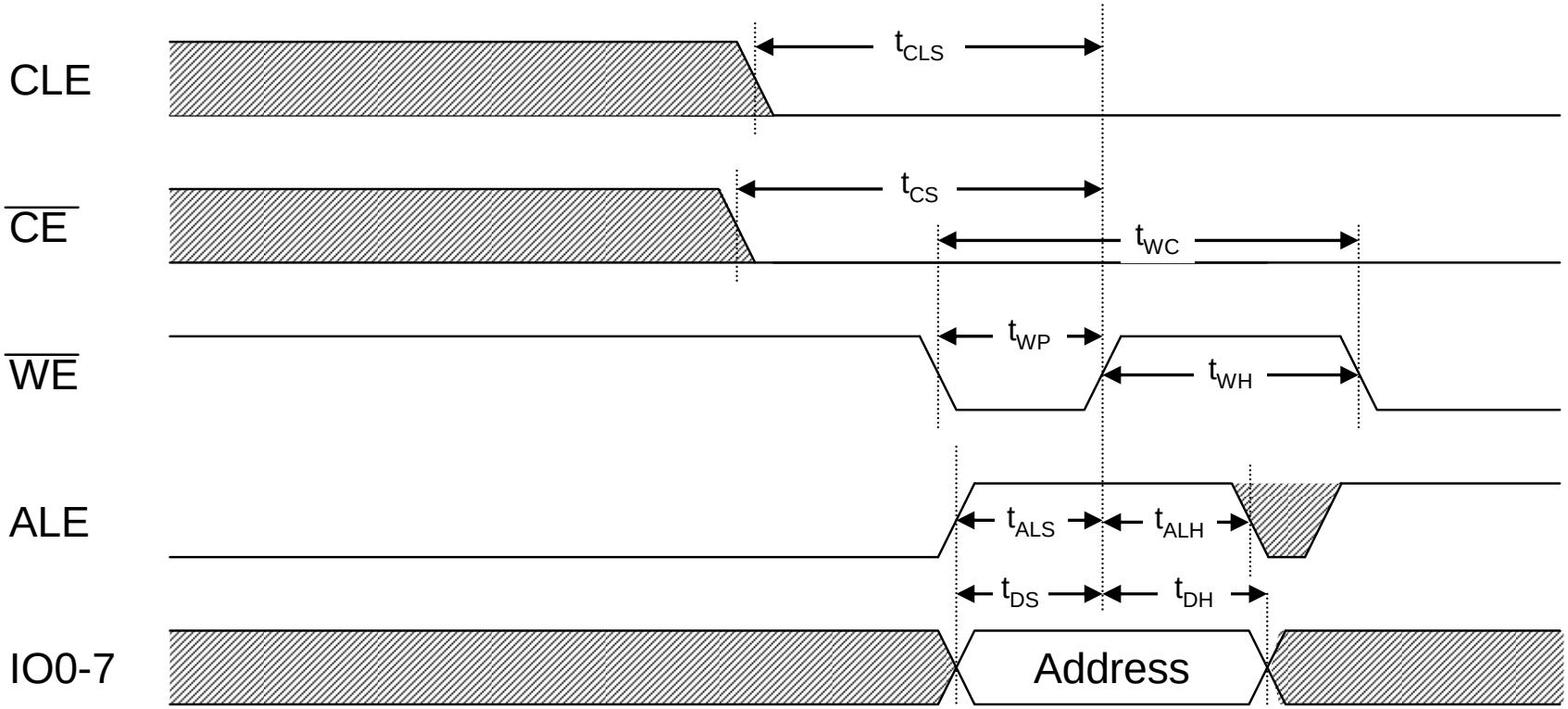

Figure 22 Address latch timings

4.3.1.3. Data Input Cycle Timings

Data input may be used with CE# don't care. However, if CE# don't care is used tCS and tCH timing requirements shall be met by the host.

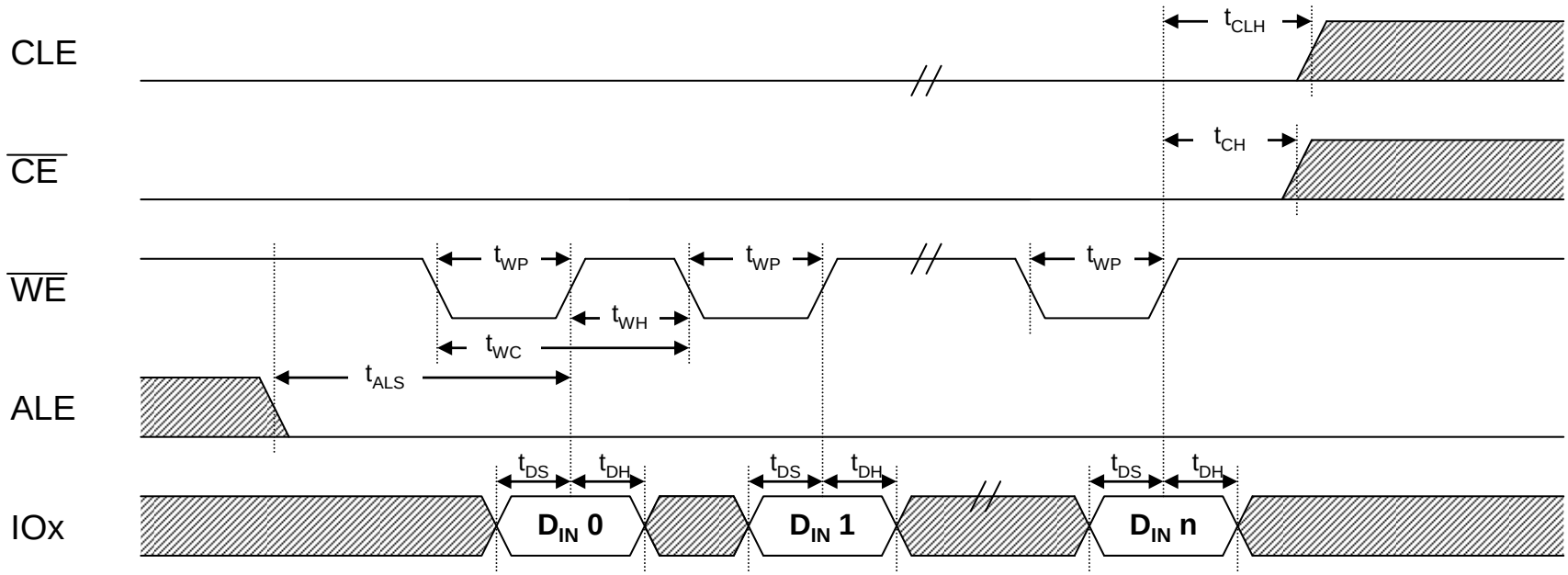

Figure 23 Data input cycle timings

4.3.1.4. Data Output Cycle Timings

Data output may be used with CE# don't care. However, if CE# don't care is used tCEA and tCOH timing requirements shall be met by the host.

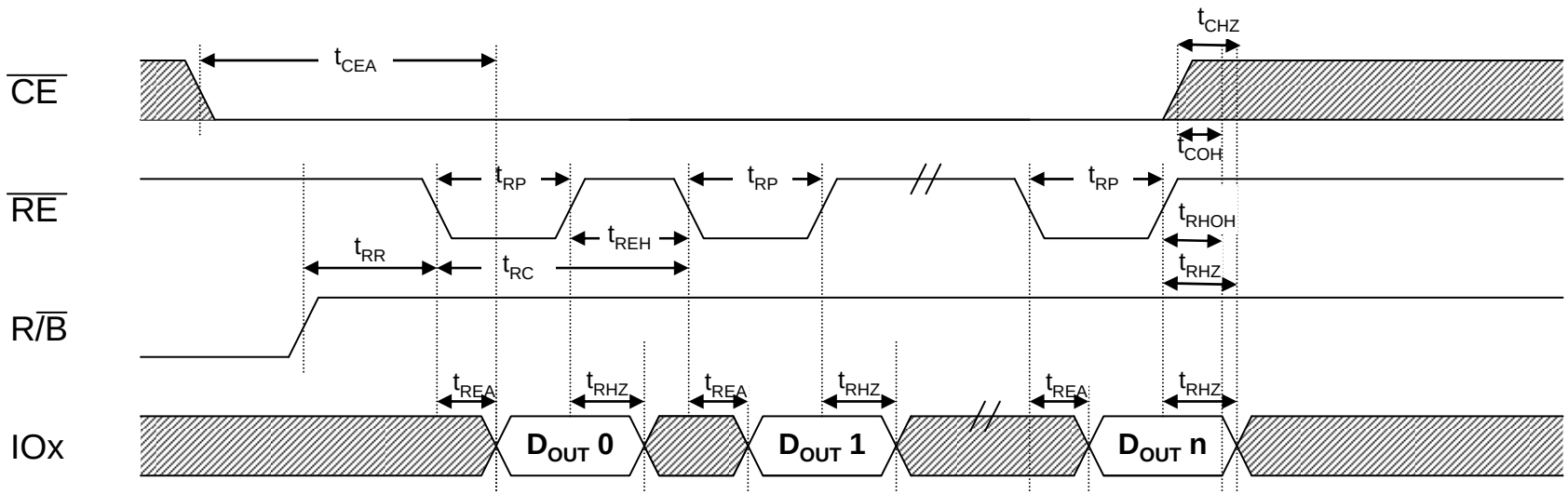

Figure 24 Data output cycle timings

4.3.1.5. Data Output Cycle Timings (EDO)

EDO data output cycle timings shall be used if the host drives tRC less than 30 ns. Data output may be used with CE# don't care. However, if CE# don't care is used tCEA and tCOH timing requirements shall be met by the host.

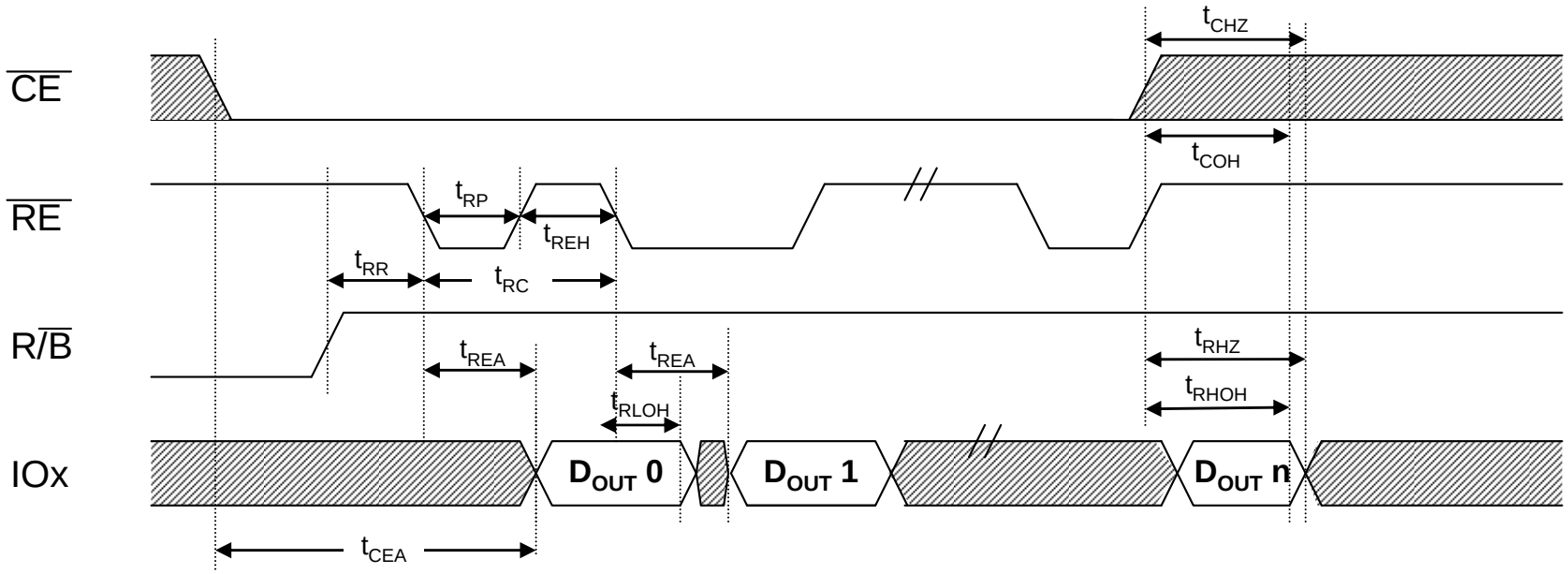

Figure 25 EDO data output cycle timings

4.3.1.6. Read Status Timings

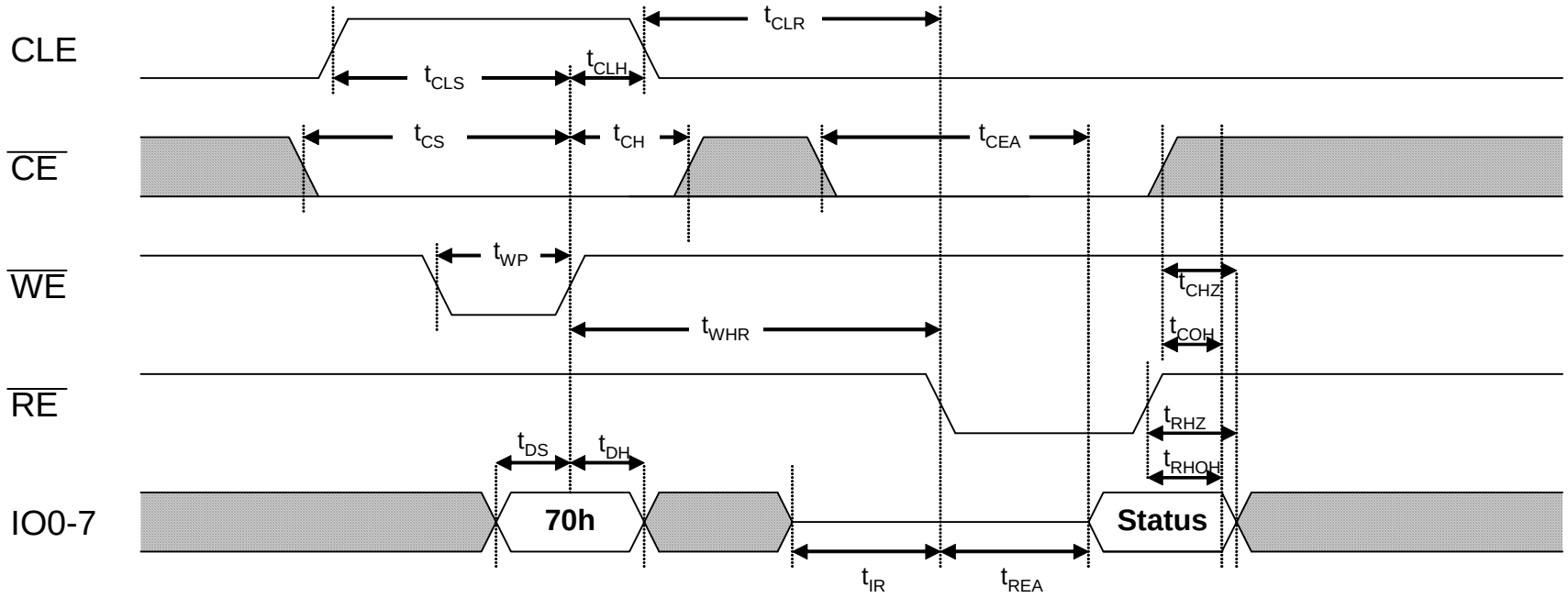

Figure 26 Read Status timings

4.3.1.7. Read Status Enhanced Timings

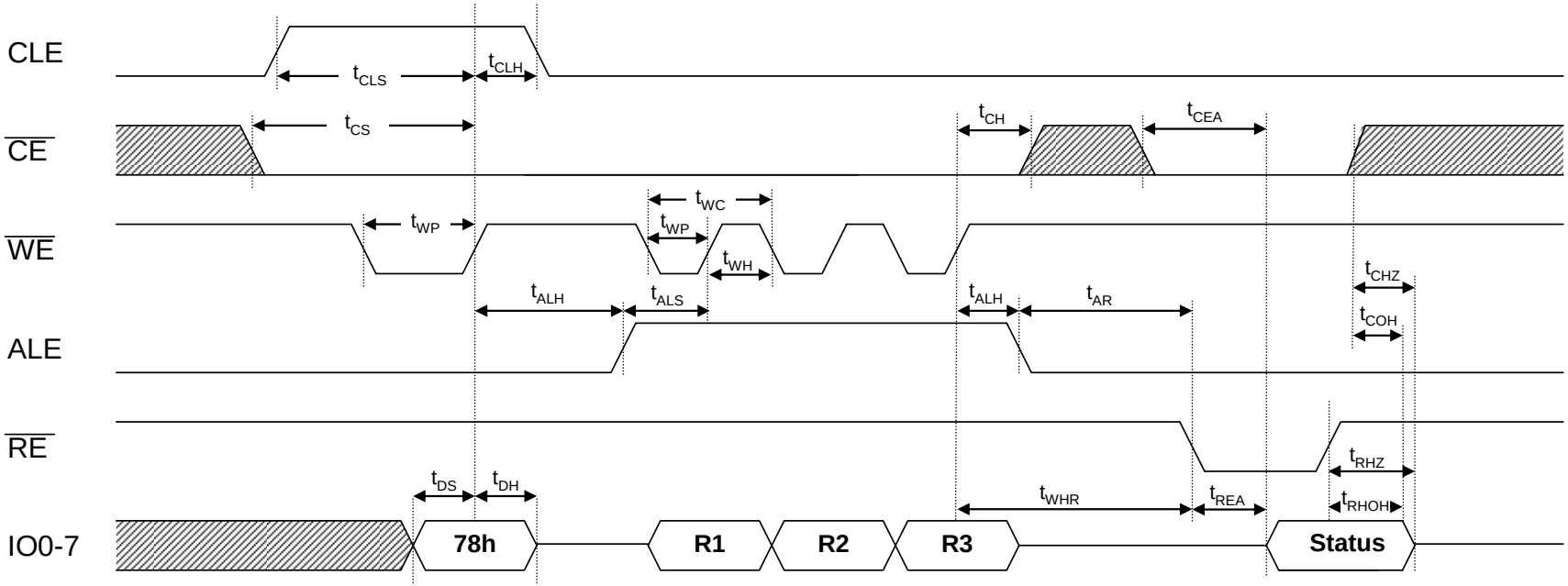

Figure 27 Read Status Enhanced timings

4.3.2. Source Synchronous

For the command, address, data input, and data output diagrams, the tCS timing parameter may consume multiple clock cycles. The host is required to satisfy tCS by the rising edge of CLK shown in the diagrams, and thus needs to pull CE# low far enough in advance to meet this requirement (which could span multiple clock cycles).

4.3.2.1. Command Cycle Timings

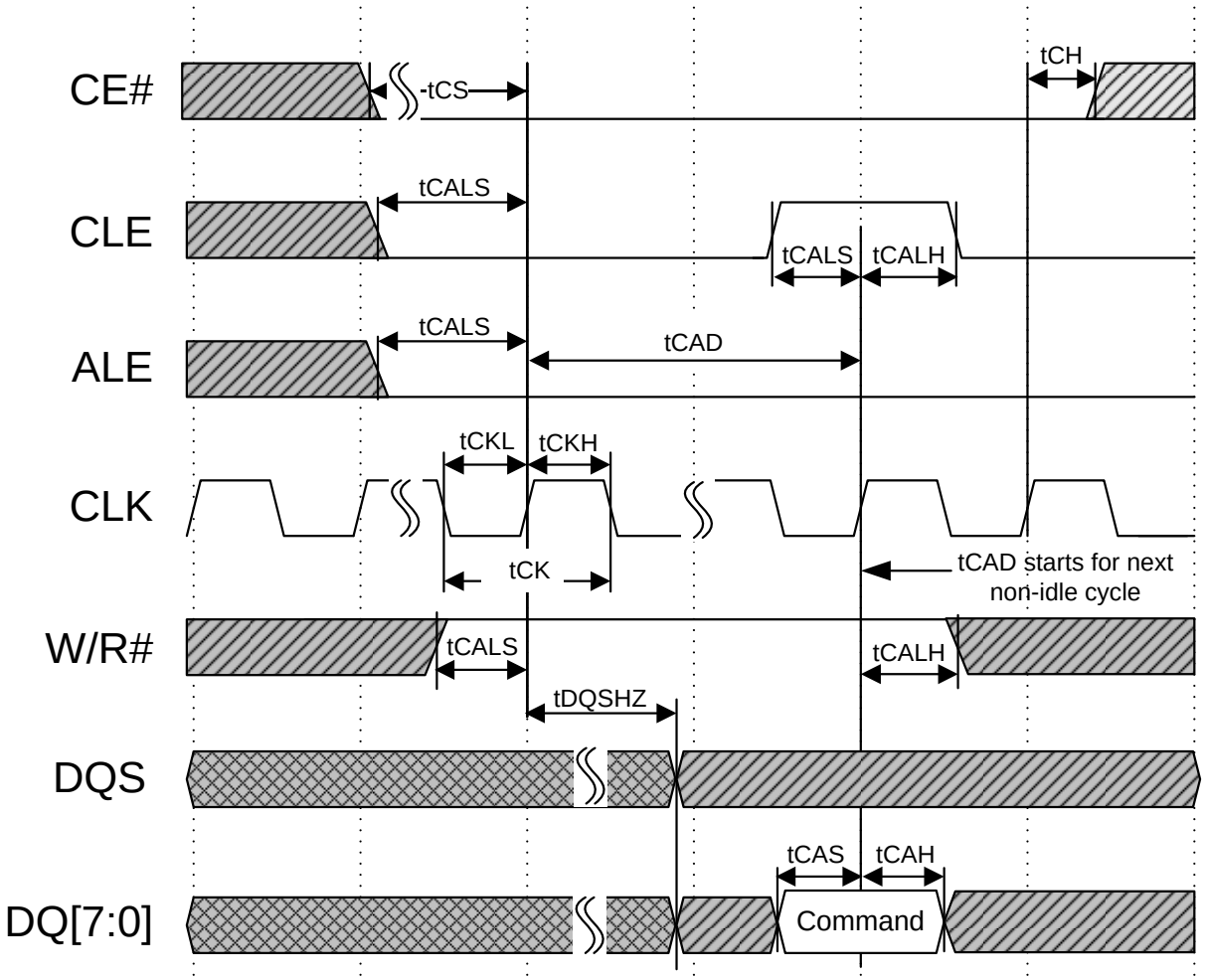

Figure 28 Command cycle timings

4.3.2.2. Address Cycle Timings

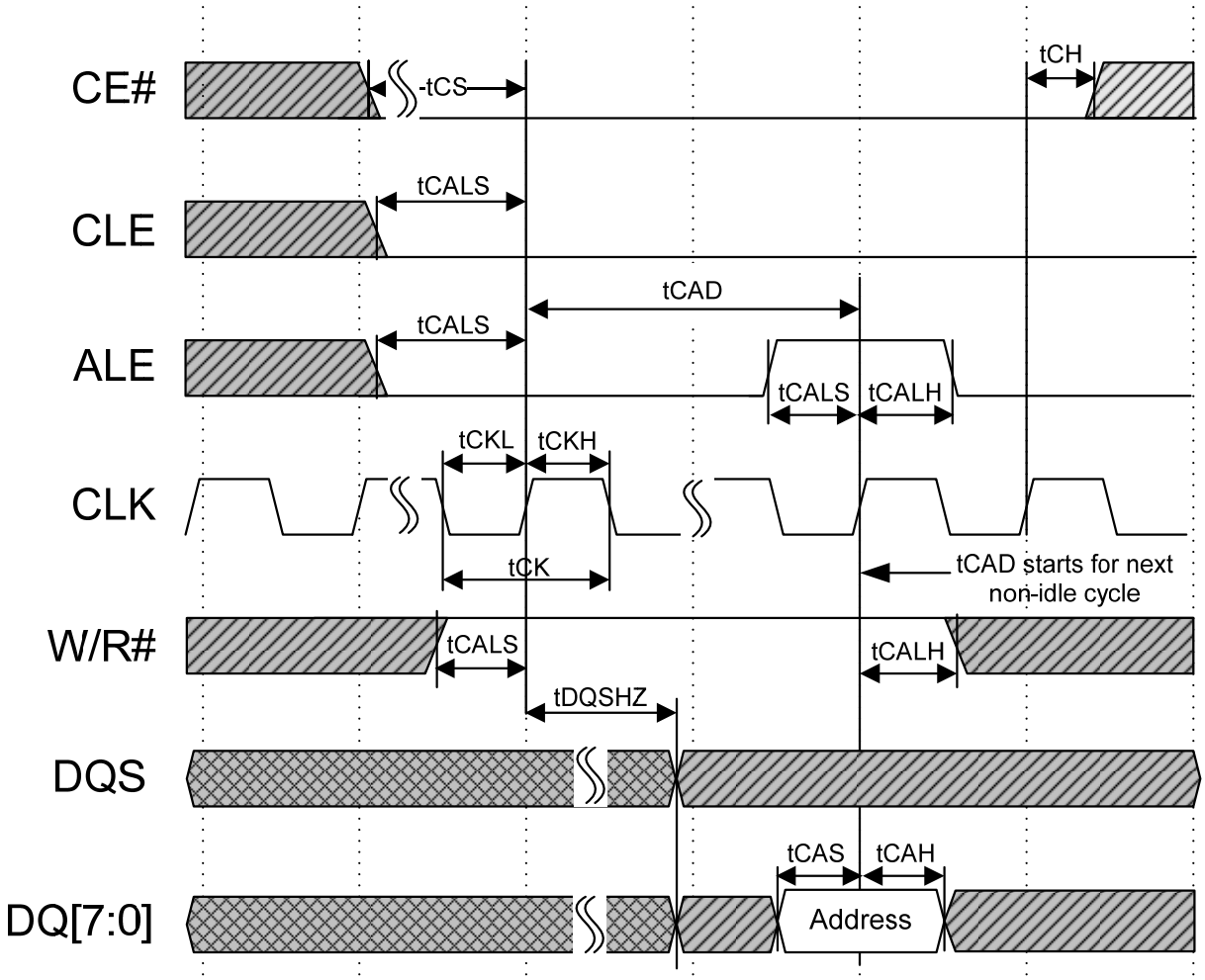

Figure 29 Address cycle timings

4.3.2.3. Data Input Cycle Timings

Data input cycle timing describes timing for data transfers from the host to the device (i.e. data writes).

For the Set Features command, the same data byte is repeated twice. The data pattern in this case is D_0 D_0 D_1 D_1 D_2 D_2 etc. The device shall only latch one copy of each data byte.

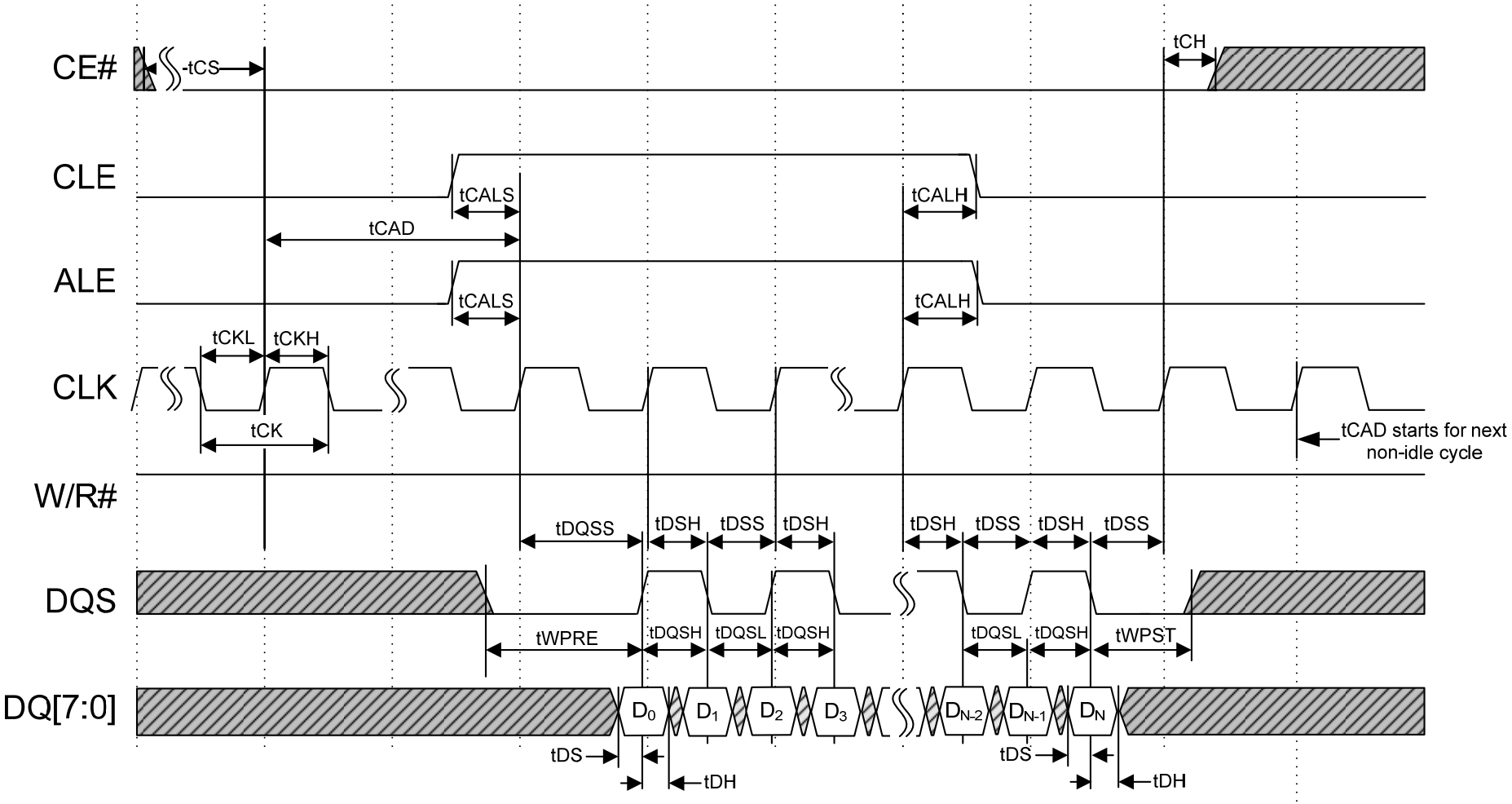

Figure 30 Data input cycle timing

4.3.2.4. Data Output Cycle Timings

Data output cycle timing describes timing for data transfers from the device to the host (i.e. data reads). The host shall not start data output (i.e. transition ALE/CLE to 11b) until the tDQSD time has elapsed.

For the Read ID, Get Features, Read Status, and Read Status Enhanced commands, the same data byte is repeated twice. The data pattern in this case is D_0 D_0 D_1 D_1 D_2 D_2 etc. The host shall only latch one copy of each data byte.

A calculated parameter, tCKWR, indicates when W/R# may be transitioned from a zero to one. This parameter is calculated as:

- tCKWR(min) = RoundUp{[tDQSCK(max) + tCK] / tCK}

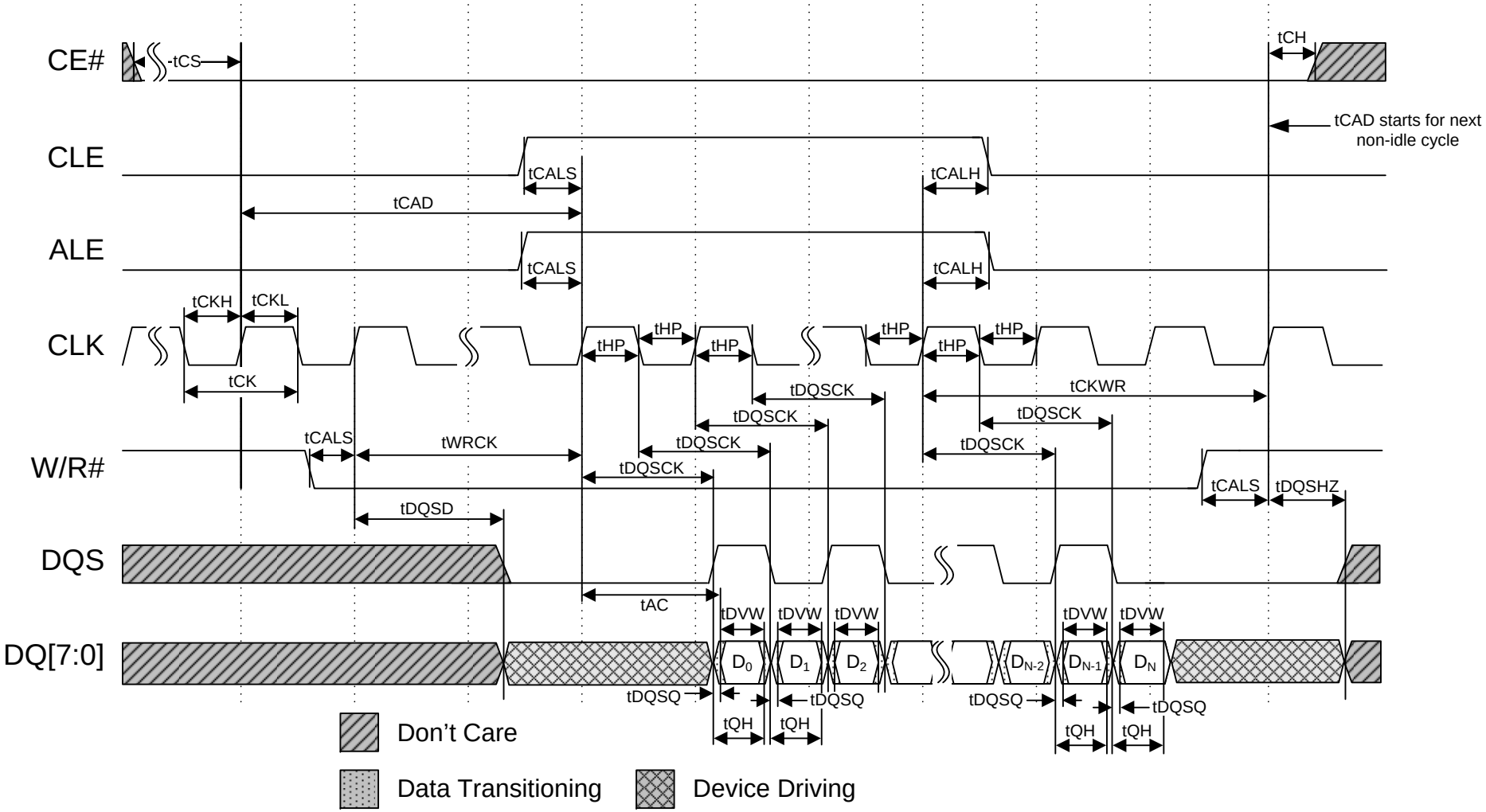

Figure 31 Data output cycle timing

4.3.2.5. W/R# Behavior Timings

Figure 32 describes the ownership transition of the DQ bus and DQS signal. The host owns the DQ bus and DQS signal when W/R# is one. The device owns the DQ bus and DQS signal when W/R# is zero. The host shall tri-state the DQ bus and DQS signal whenever W/R# is zero.

When W/R# transitions from one to zero, the bus ownership is assumed by the device. The device shall start driving the DQS signal low within tDQSD after the transition of W/R# to zero. When W/R# transitions from zero to one, the bus ownership is assumed by the host. The device shall tri-state the DQ bus and DQS signal within tDQSHZ after the transition of W/R# to one.

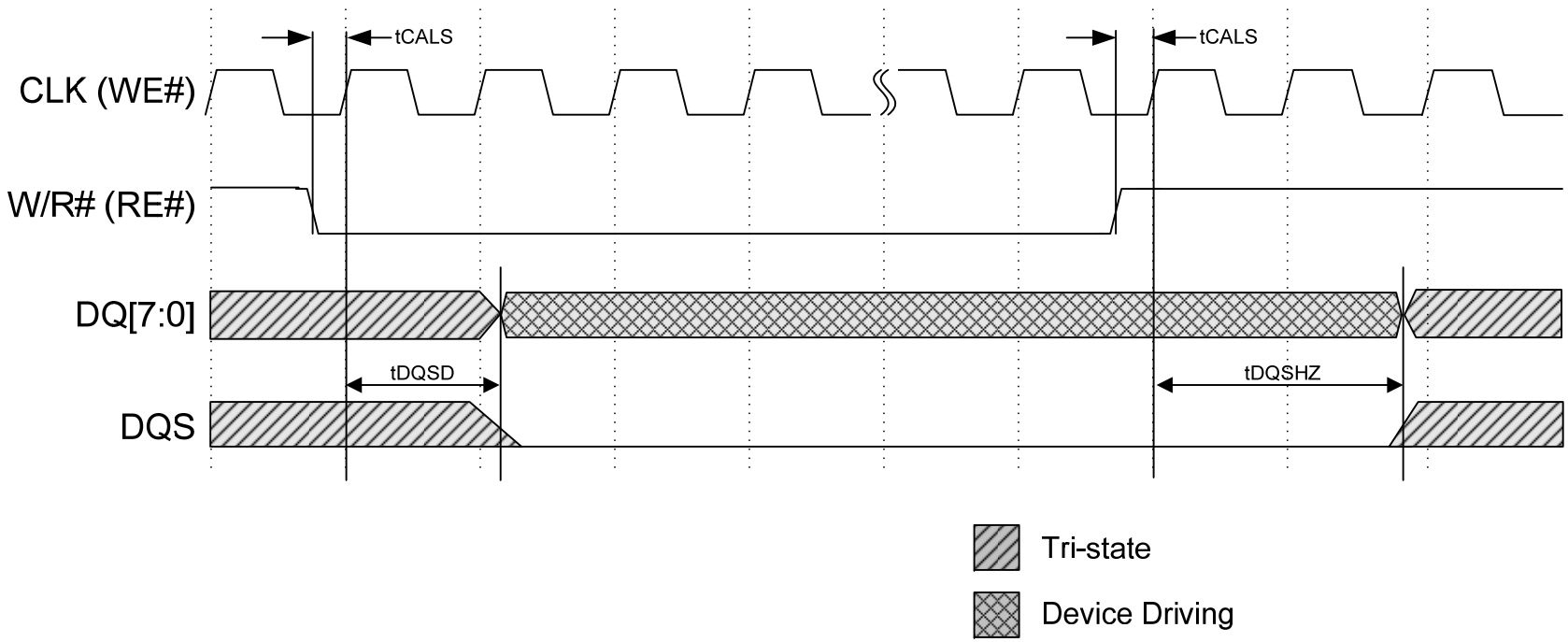

Figure 32 W/R# timing

4.3.2.6. Satisfying Timing Requirements

In some cases there are multiple timing parameters that shall be satisfied prior to the next phase of a command operation. For example, both tDQSD and tCCS shall be satisfied prior to data output commencing for the Change Write Column command. The host and device shall ensure all timing parameters are satisfied. In cases where tADL, tCCS, tRHW, or tWHR are required, then these are the governing parameters (i.e. these parameters are the longest times).

Figure 33 and Figure 34 show an example of a Read Status command that includes all the timing parameters for both the command and data phase of the operation. It may be observed that tWHR is the governing parameter prior to the data transfer starting. Also note that the same data byte is transmitted twice (D_0, D_0) for the Read Status command.

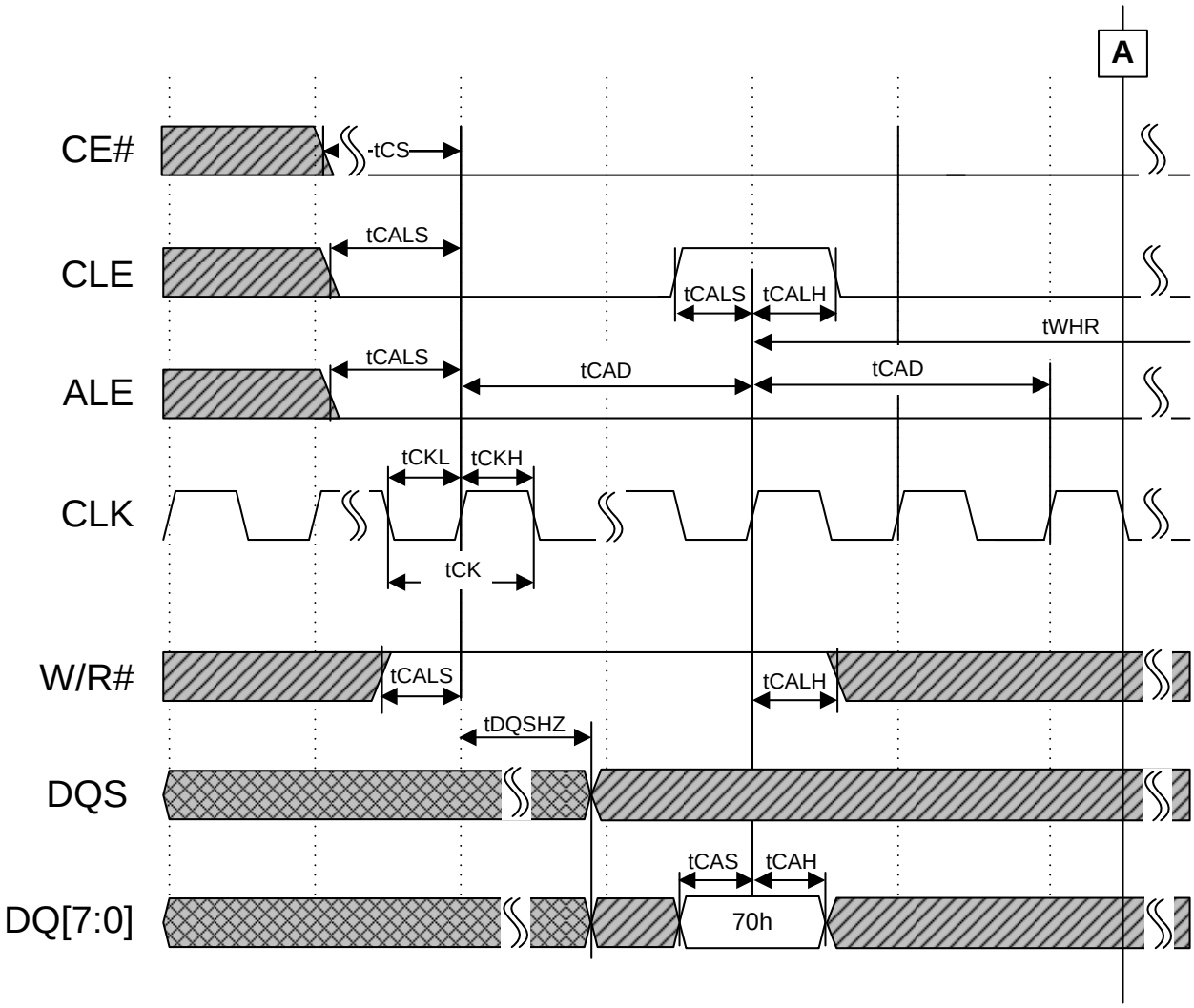

Figure 33 Read Status including tWHR and tCAD timing requirements

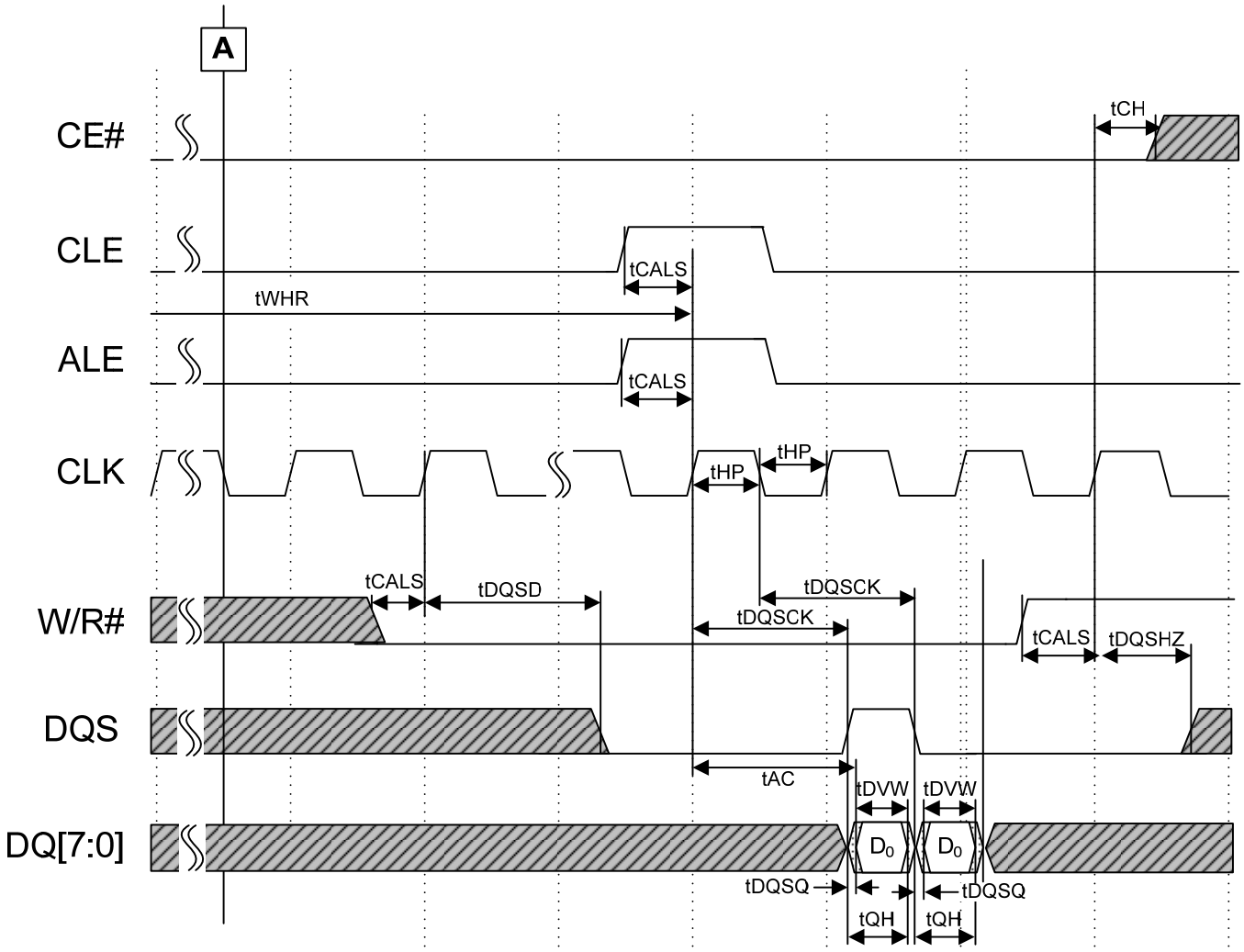

Figure 34 Read Status including tWHR and tCAD timing requirements, continued

4.4. Command Examples

4.4.1. Asynchronous

This section shows examples of commands using the asynchronous data interface. Figure 35 and Figure 36 show an example of Change Read Column.

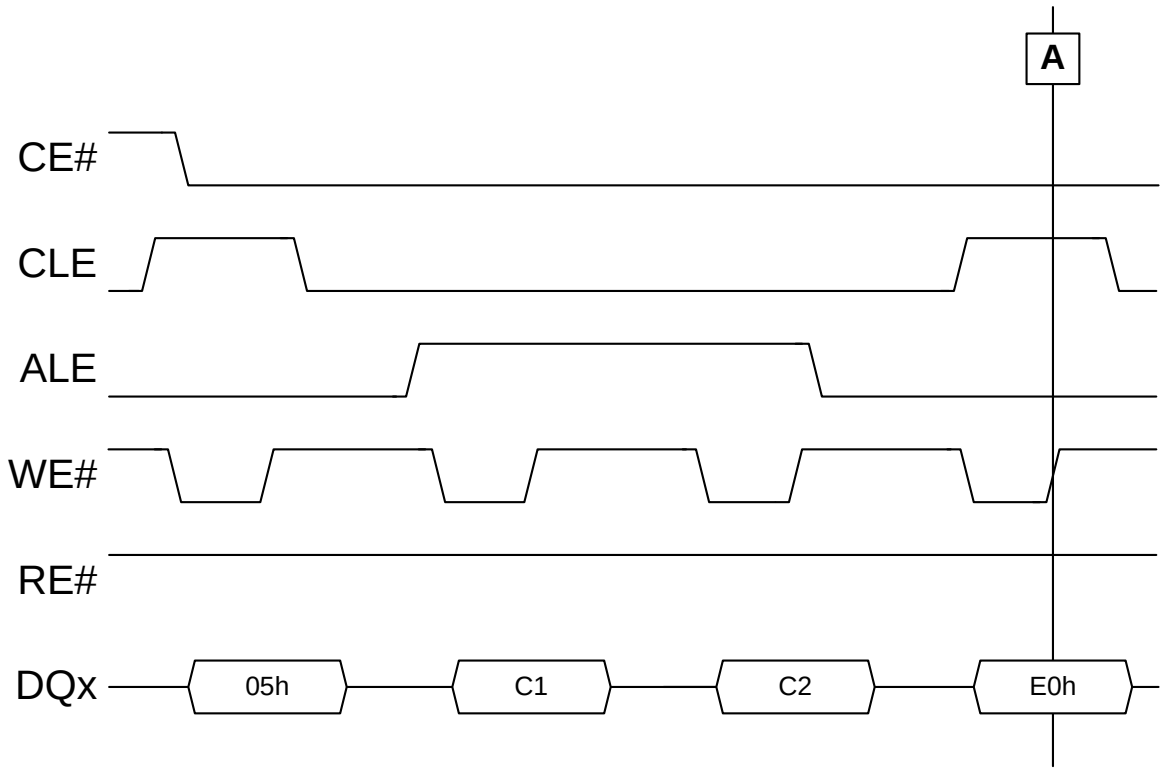

Figure 35 Asynchronous Data Interface: Change Read Column example

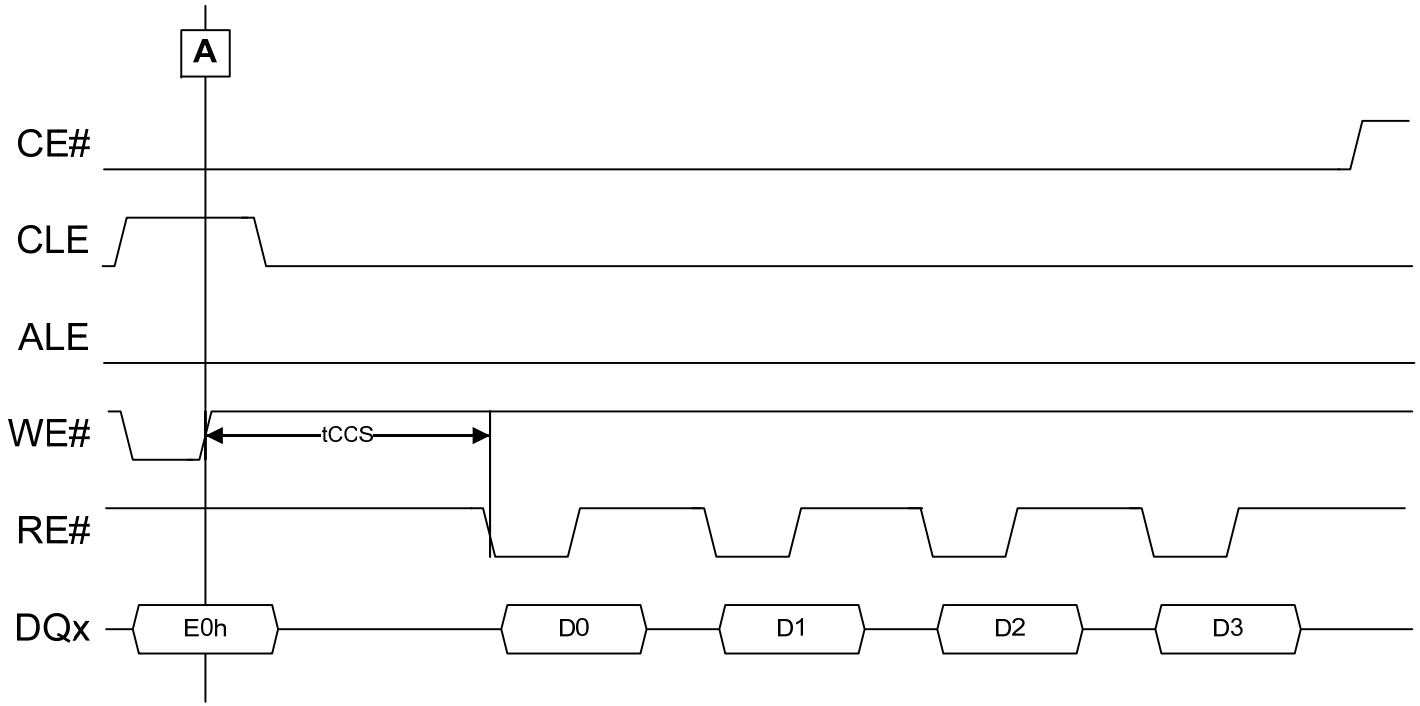

Figure 36 Asynchronous Data Interface: Change Read Column example, continued

Figure 37 shows an example of Change Write Column.

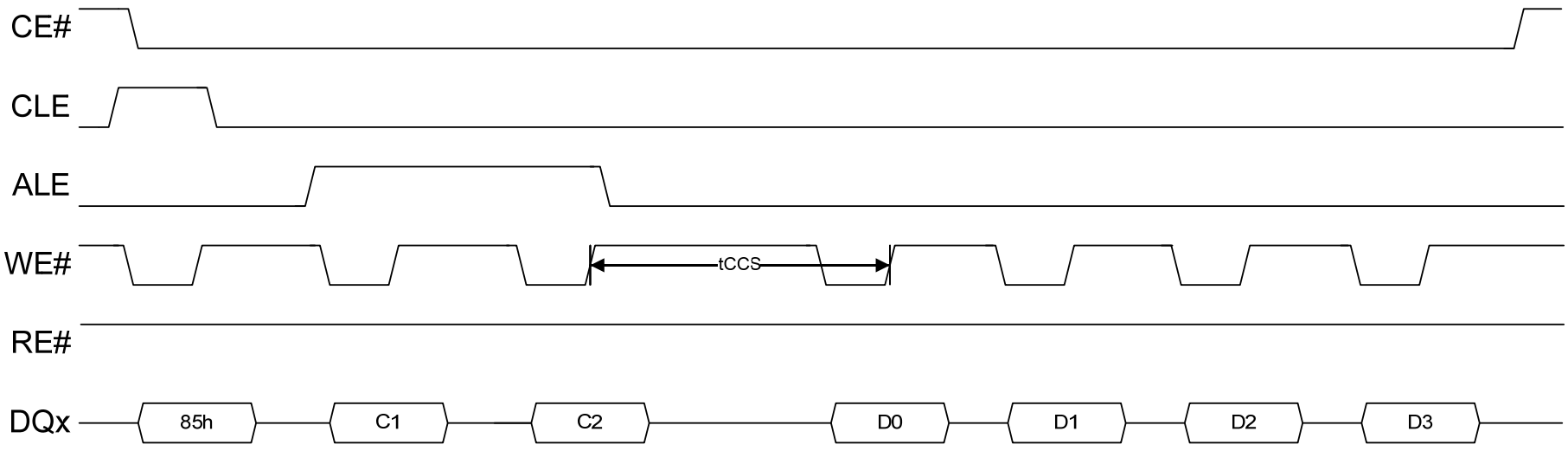

Figure 37 Asynchronous Data Interface: Change Write Column example

4.4.2. Source Synchronous

This section shows examples of commands using the source synchronous data interface. Figure 38 through Figure 40 show an example of Change Read Column. Figure 40 shows a continuation of data transfer, after the host stops the transfer for a period of time.

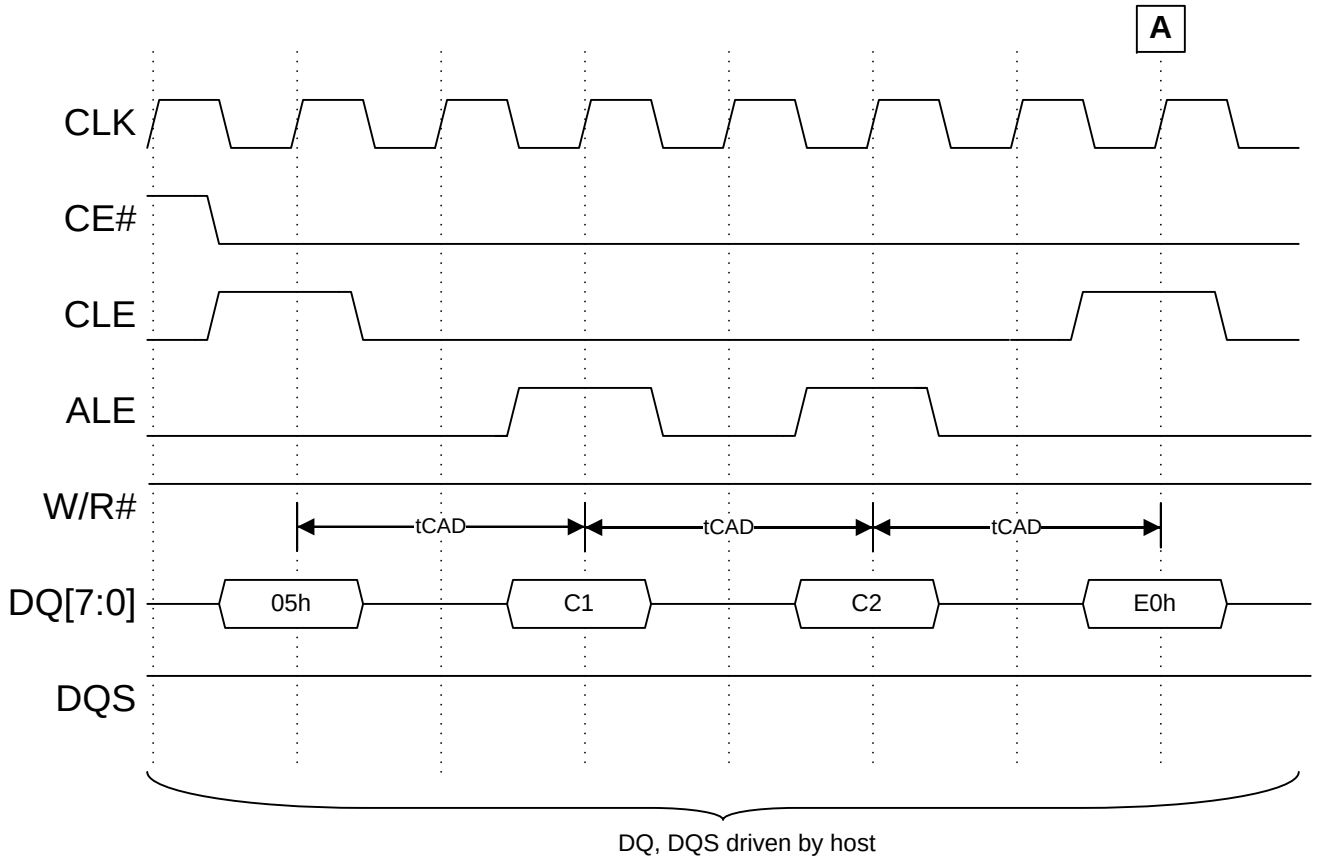

Figure 38 **Source Synchronous Data Interface: Change Read Column example, command issue**

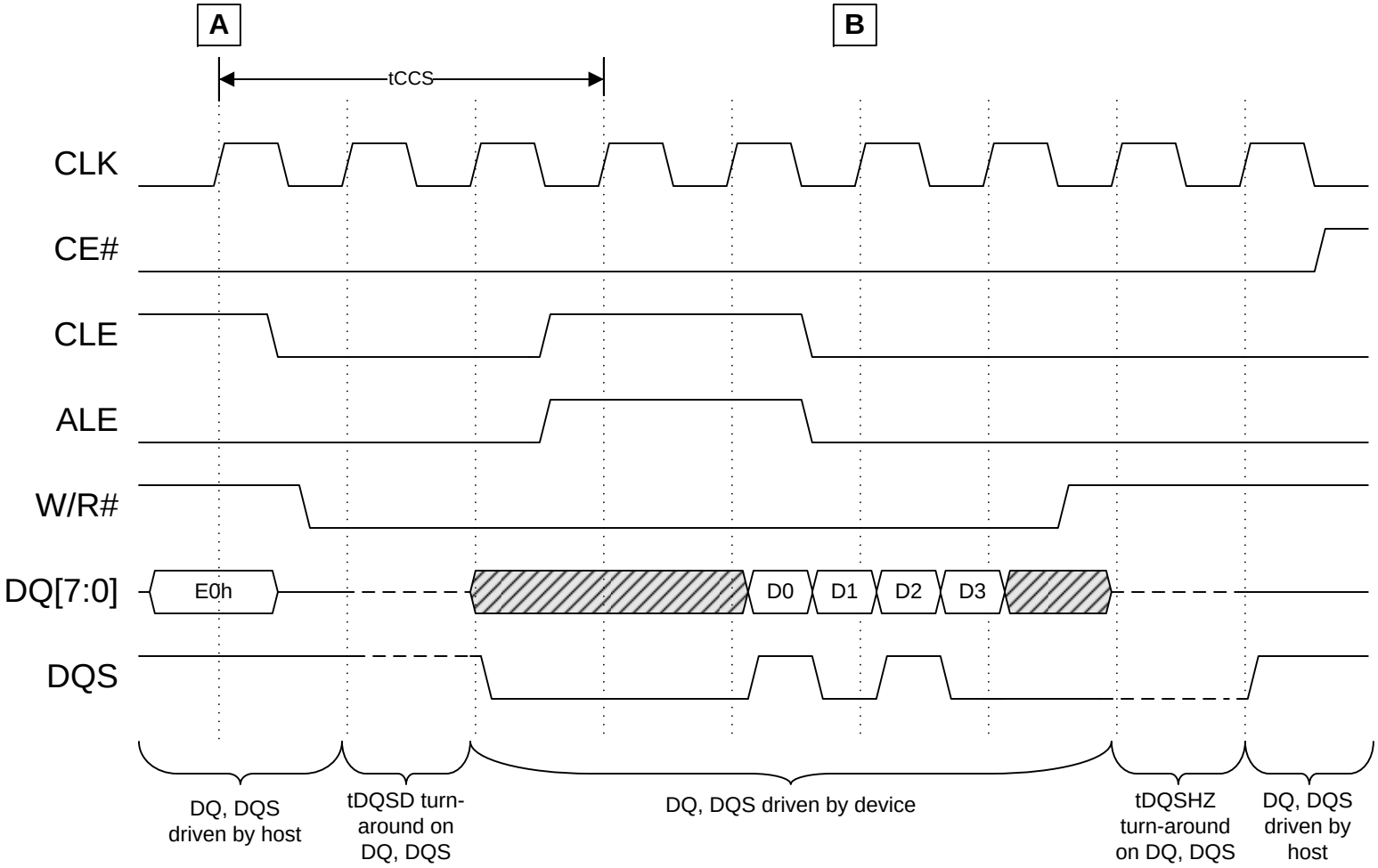

Figure 39 Source Synchronous Data Interface: Change Read Column example, data transfer

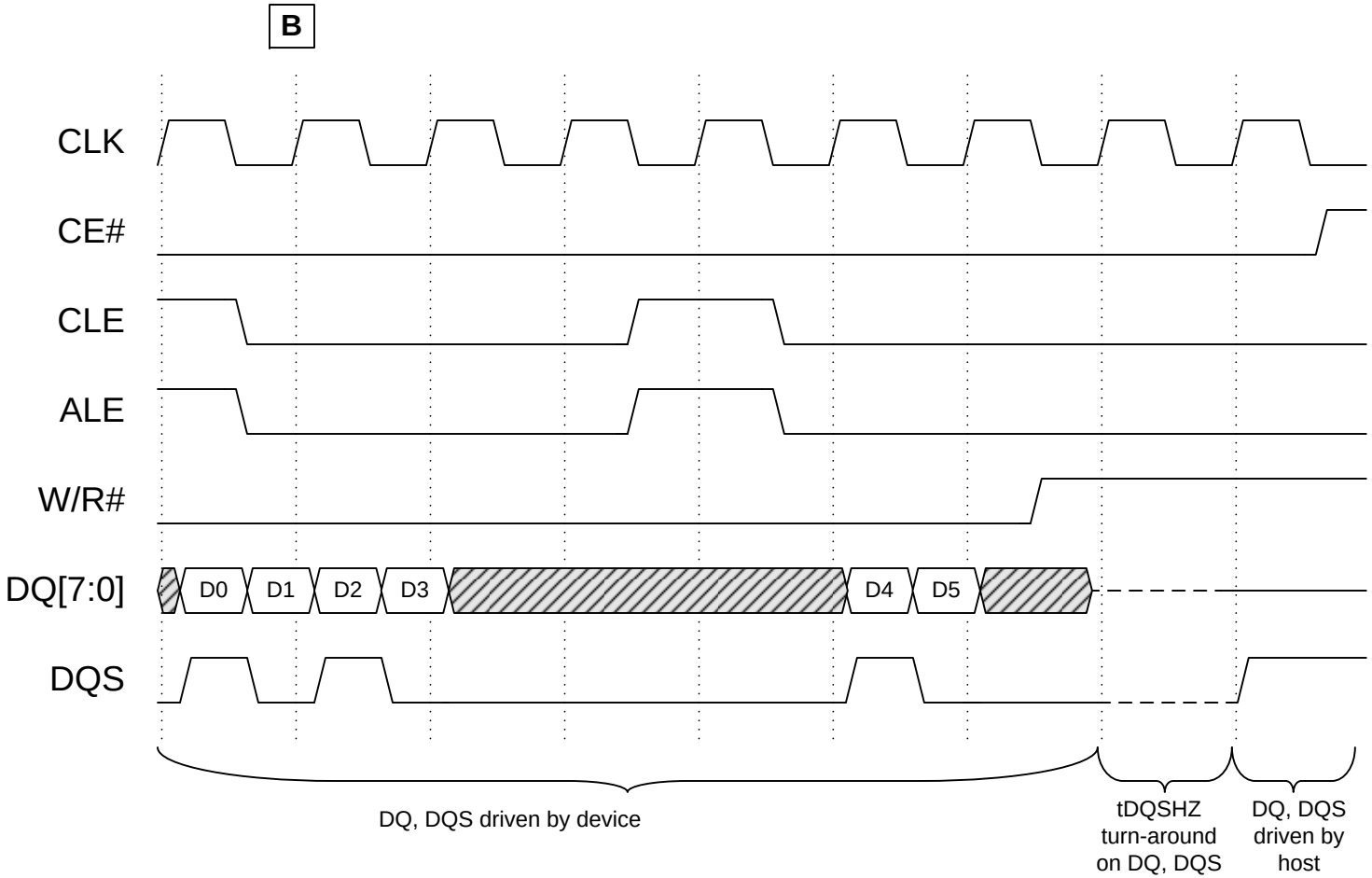

Figure 40 Source Synchronous Data Interface: Change Read Column example, data transfer continue

Figure 41 shows an example of Change Write Column.

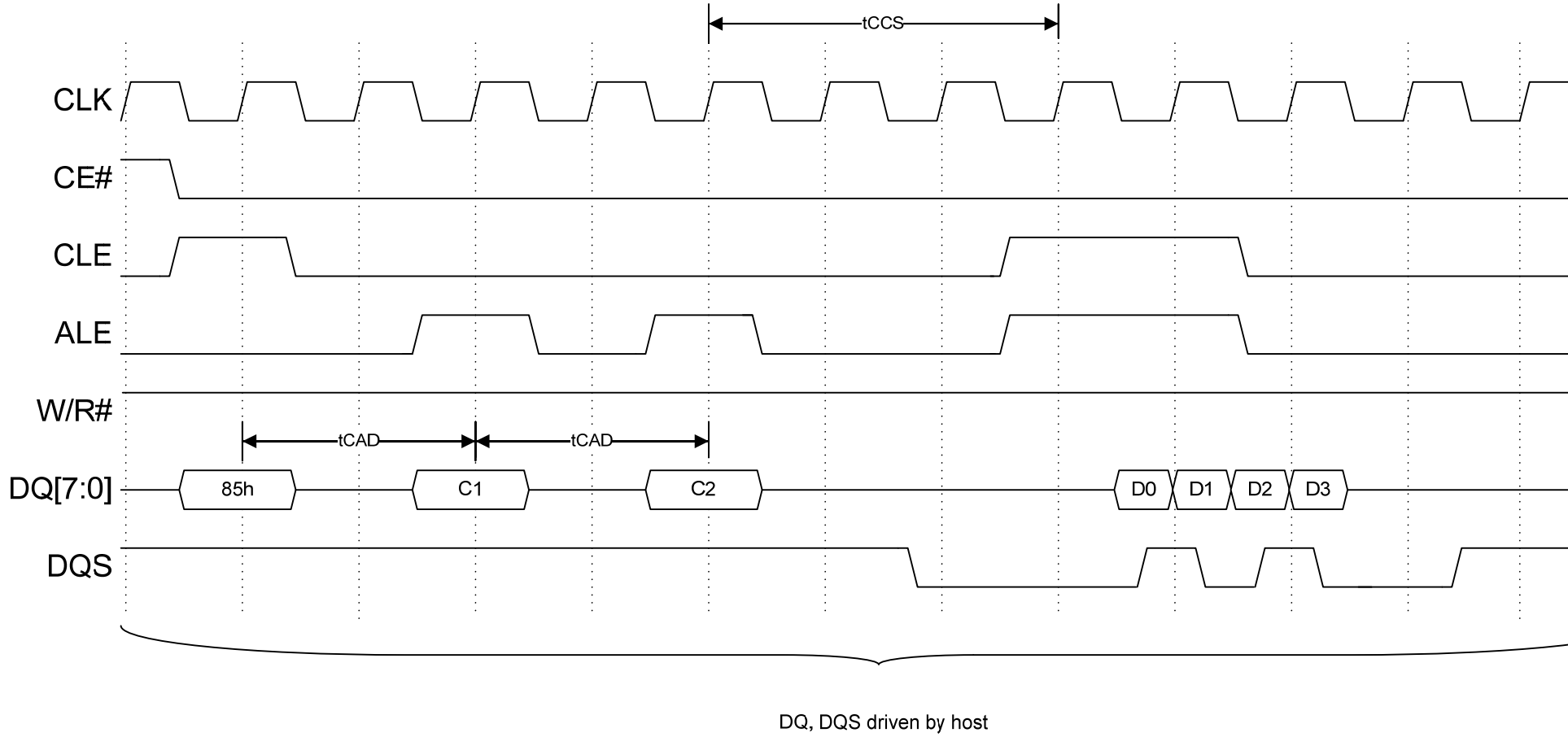

Figure 41 Source Synchronous Data Interface: Change Write Column example

5. Command Definition

5.1. Command Set

Table 36 outlines the ONFI command set.

The value specified in the first command cycle identifies the command to be performed. Some commands have a second command cycle as specified in Table 36. Typically, commands that have a second command cycle include an address.

Command	O/M	1st Cycle	2nd Cycle	Acceptable while Accessed LUN is Busy	Acceptable while Other LUNs are Busy	Target level commands
Read	M	00h	30h		Y	
Copyback Read	O	00h	35h		Y	
Change Read Column	M	05h	E0h		Y	
Read Cache Random	O	00h	31h		Y	
Read Cache Sequential	O	31h			Y	
Read Cache End	O	3Fh			Y	
Block Erase	M	60h	D0h		Y	
Interleaved	O		D1h		Y	
Read Status	M	70h		Y	Y	
Read Status Enhanced	O	78h		Y	Y	
Page Program	M	80h	10h		Y	
Interleaved	O		11h		Y	
Page Cache Program	O	80h	15h		Y	
Copyback Program	O	85h	10h		Y	
Interleaved	O	85h	11h		Y	
Change Write Column	M	85h			Y	
Read ID	M	90h				Y
Read Parameter Page	M	ECh				Y
Read Unique ID	O	EDh				Y
Get Features	O	EEh				Y
Set Features	O	EFh				Y
Synchronous Reset	O	FCh		Y	Y	Y
Reset	M	FFh		Y	Y	Y

Table 36 Command set

Reserved opcodes shall not be used by the device, as the ONFI specification may define the use of these opcodes in a future revision. Vendor specific opcodes may be used at the discretion of the vendor and shall never be defined for standard use by ONFI. Future Standardization opcodes are those opcodes already being used commonly in the industry and may be defined for standard use by ONFI for those same purposes. Future Standardization opcodes may be used by compliant ONFI implementations with the common industry usage. Block abstracted NAND opcodes are opcodes used in a BA NAND implementation.

Type	Opcode
Vendor Specific	02h – 04h, 08h, 16h – 17h, 19h, 1Dh, 20h – 22h, 25h – 29h, 2Bh, 2Dh – 2Fh, 33h, 36h – 3Eh, 40h – 41h, 48h, 4Ch, 53h – 55h, 68h, 72h – 75h, 84h, 87h – 89h, 91h – BFh, CFh, F1-F4h
Future Standardization	06h, 23h – 24h, 2Ah, 2Ch, 32h, 34h, 65h, 71h, 79h – 7Bh, 81h
Block Abstracted NAND	C0h - CEh
Reserved	01h, 07h, 09h – 0Fh, 12h-14h, 18h, 1Ah – 1Ch, 1Eh – 1Fh, 42h – 47h, 49h – 4Bh, 4Dh – 52h, 56h – 5Fh, 61h – 64h, 66h – 67h, 69h – 6Fh, 76h – 77h, 7Ch – 7Fh, 82h – 83h, 86h, 8Ah – 8Fh, D2h –DFh, E1h – EBh, F0h, F5h – FBh, FDh – FEh

Table 37 Opcode Reservations

5.2. Command Descriptions

The command descriptions in section 5 are shown in a format that is agnostic to the data interface being used (when the command may be used in either data interface). An example of the agnostic command description for Change Write Column is shown in Figure 42. The agnostic command examples shall be translated to a command description for the particular data interface selected. The command description for Change Write Column in the asynchronous data interface is shown in Figure 43. The command description for Change Write Column in the source synchronous data interface is shown in Figure 44. Note that the timing parameters defined in section 4 shall be observed for each command (e.g. the tCAD timing parameter for the source synchronous data interface).

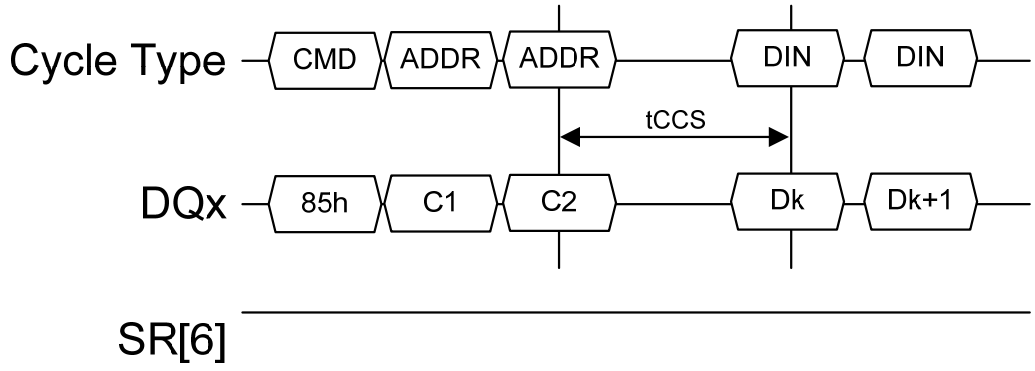

Figure 42 Agnostic command description

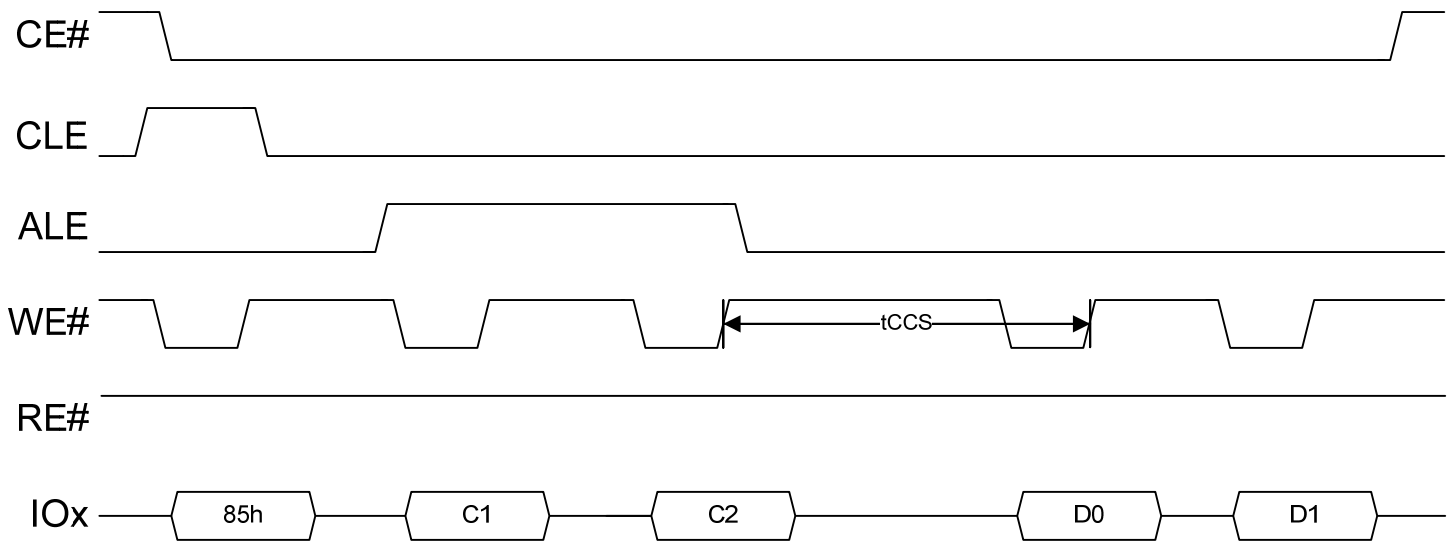

Figure 43 Asynchronous data interface command description

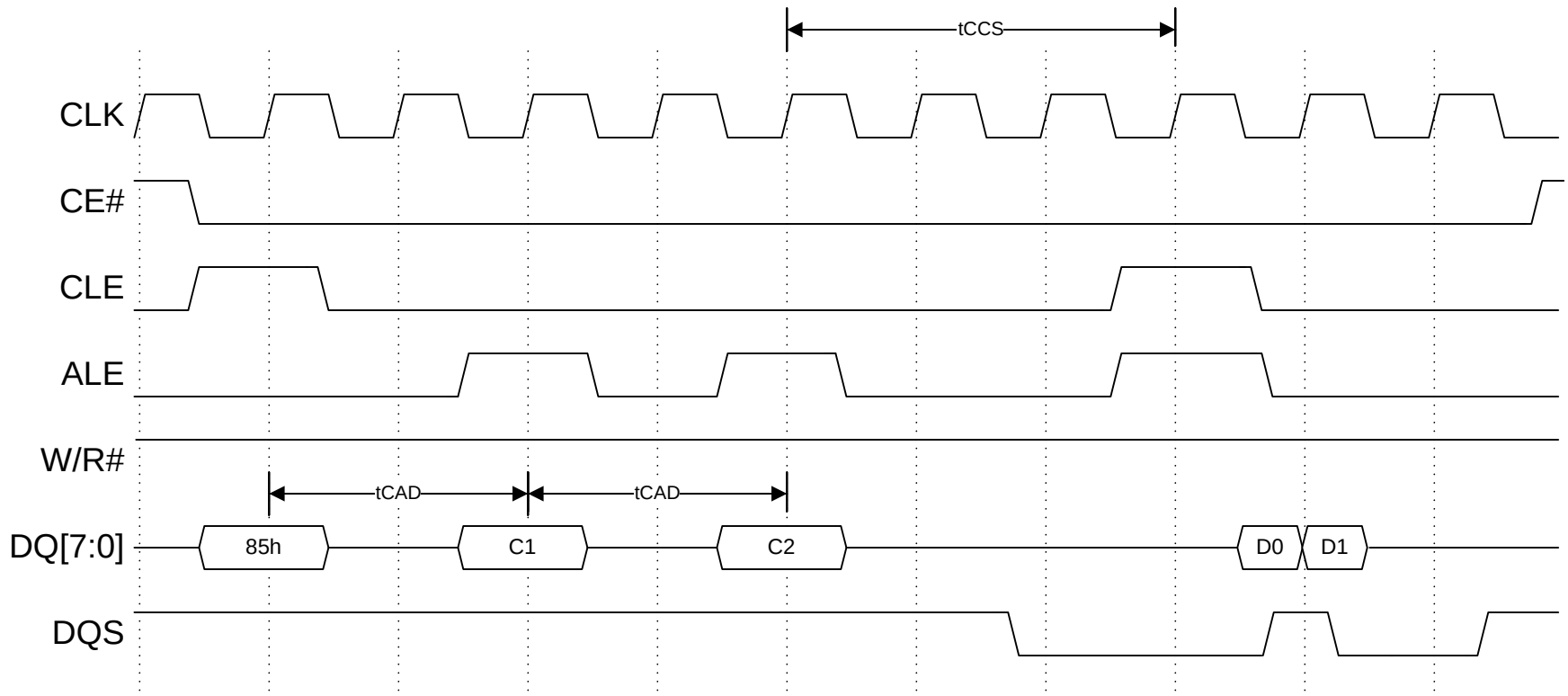

Figure 44 Source synchronous data interface command description

5.3. Reset Definition

The Reset function puts the target in its default power-up state and places the target in the asynchronous data interface. This command shall only be issued when the host is configured to the asynchronous data interface. The device shall also recognize and execute the Reset command when it is configured to the source synchronous data interface.

Note that some feature settings are retained across Reset commands (as specified in section 5.22). As part of the Reset command, all LUNs are also reset. The command may be executed with the target in any state, except during power-on when Reset shall not be issued until R/B# is set to one. Figure 45 defines the Reset behavior and timings.

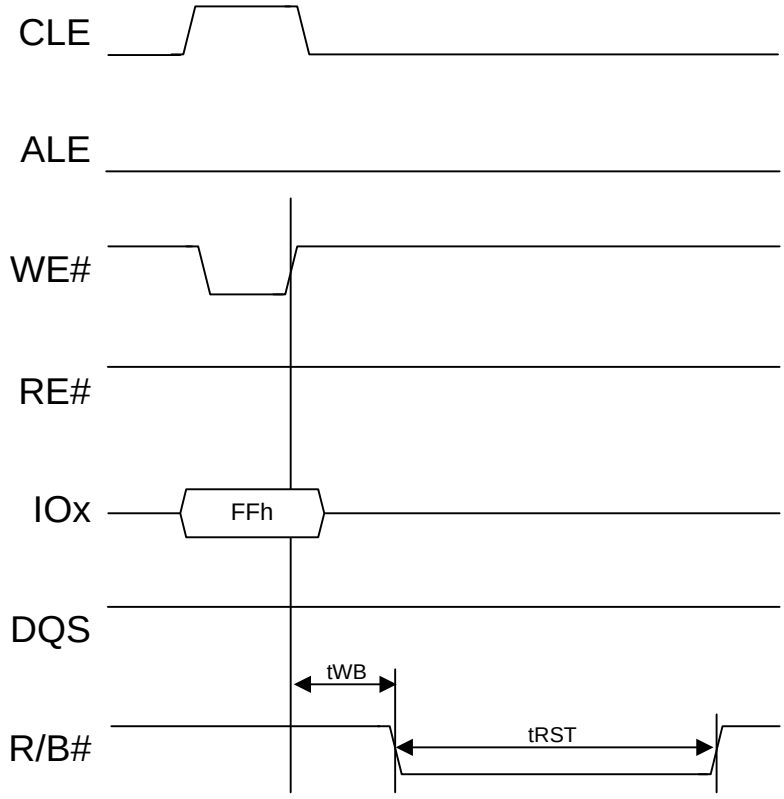

Figure 45 Reset timing diagram

5.4. Synchronous Reset Definition

The Synchronous Reset command resets the target and all LUNs. The command may be executed with the target in any state. Figure 46 defines the Synchronous Reset behavior and timings.

This command shall be supported by devices that support the source synchronous data interface. This command is only accepted in source synchronous operation. The host should not issue this command when the device is configured to the asynchronous data interface. The target shall remain in the source synchronous data interface following this command.

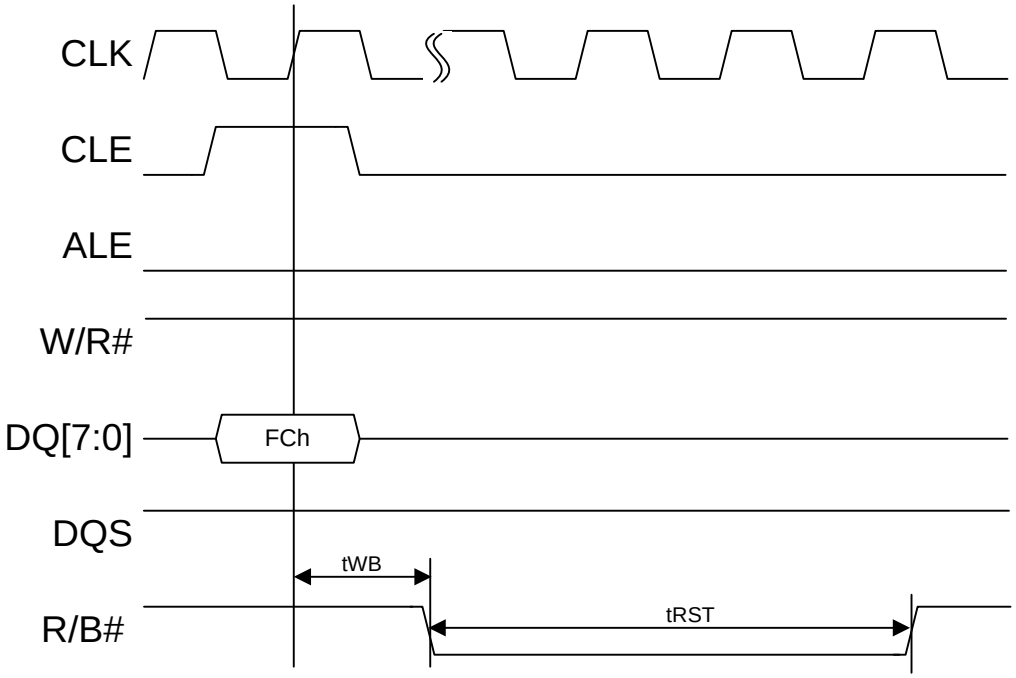

Figure 46 Synchronous Reset timing diagram

5.5. Read ID Definition

The Read ID function identifies that the target supports the ONFI specification. If the target supports the ONFI specification, then the ONFI signature shall be returned. The ONFI signature is the ASCII encoding of ‘ONFI’ where ‘O’ = 4Fh, ‘N’ = 4Eh, ‘F’ = 46h, and ‘I’ = 49h. Reading beyond four bytes yields indeterminate values. Figure 47 defines the Read ID behavior and timings.

When issuing Read ID in the source synchronous data interface, each data byte is received twice. The host shall only latch one copy of each data byte. See section 4.3.2.4.

For the Read ID command, only addresses of 00h and 20h are valid. To retrieve the ONFI signature an address of 20h shall be entered (i.e. it is not valid to enter an address of 00h and read 36 bytes to get the ONFI signature).

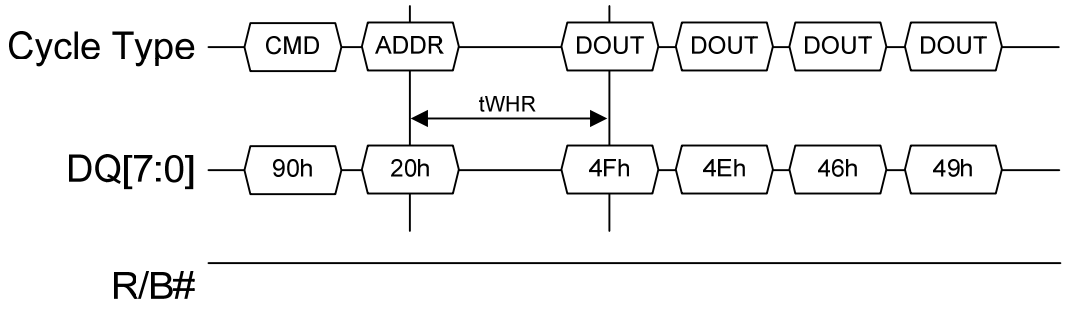

Figure 47 Read ID timing diagram for ONFI signature

The Read ID function can also be used to determine the JEDEC manufacturer ID and the device ID for the particular NAND part by specifying an address of 00h. Figure 48 defines the Read ID behavior and timings for retrieving the JEDEC manufacturer ID and device ID. Reading beyond the first two bytes yields values as specified by the manufacturer.

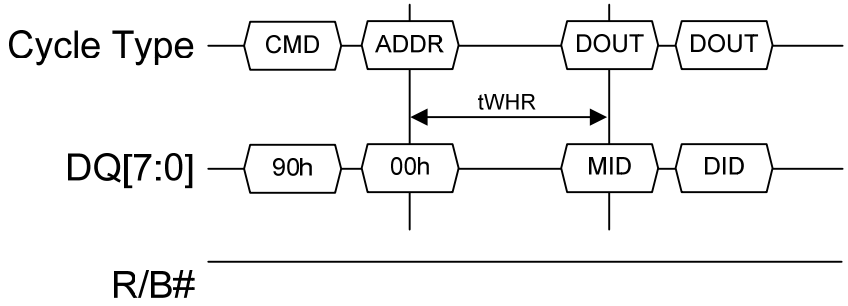

Figure 48 Read ID timing diagram for manufacturer ID

MID	Manufacturer ID for manufacturer of the part, assigned by JEDEC.
DID	Device ID for the part, assigned by the manufacturer.

5.6. Read Parameter Page Definition

The Read Parameter Page function retrieves the data structure that describes the target's organization, features, timings and other behavioral parameters. Figure 49 defines the Read Parameter Page behavior.

Values in the parameter page are static and shall not change. The host is not required to read the parameter page after power management events.

The first time the host executes the Read Parameter Page command after power-on, timing mode 0 shall be used. If the host determines that the target supports more advanced timing modes, those supported timing modes may be used for subsequent execution of the Read Parameter Page command.

The Change Read Column command may be issued following execution of the Read Parameter Page to read specific portions of the parameter page.

Read Status may be used to check the status of Read Parameter Page during execution. After completion of the Read Status command, 00h shall be issued by the host on the command line to continue with the data output flow for the Read Parameter Page command.

Read Status Enhanced shall not be used during execution of the Read Parameter Page command.

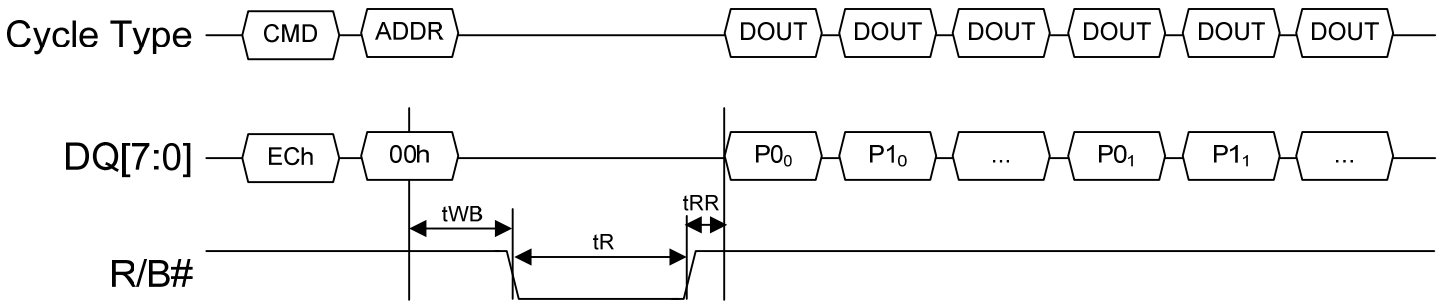

Figure 49 Read Parameter Page command timing

$P0_k$-Pn_k The kth copy of the parameter page data structure. See section 5.6.1. Reading bytes beyond the end of the final parameter page copy returns indeterminate values.

5.6.1. Parameter Page Data Structure Definition

Table 38 defines the parameter page data structure. For parameters that span multiple bytes, the least significant byte of the parameter corresponds to the first byte. See section 1.3.2.3 for more information on the representation of word and Dword values.

Values are reported in the parameter page in units of bytes when referring to items related to the size of data access (as in an 8-bit data access device). For example, the target will return how many data *bytes* are in a page. For a device that supports 16-bit data access, the host is required to convert byte values to word values for its use.

Unused fields should be cleared to 0h by the target.

Byte	O/M	Description
	Revision information and features block	
0-3	M	Parameter page signature Byte 0: 4Fh, “O” Byte 1: 4Eh, “N” Byte 2: 46h, “F” Byte 3: 49h, “I”
4-5	M	Revision number 3-15 Reserved (0) 2 1 = supports ONFI version 2.0 1 1 = supports ONFI version 1.0 0 Reserved (0)
6-7	M	Features supported 6-15 Reserved (0) 5 1 = supports source synchronous 4 1 = supports odd to even page Copyback 3 1 = supports interleaved operations 2 1 = supports non-sequential page programming 1 1 = supports multiple LUN operations 0 1 = supports 16-bit data bus width
8-9	M	Optional commands supported 6-15 Reserved (0) 5 1 = supports Read Unique ID 4 1 = supports Copyback 3 1 = supports Read Status Enhanced 2 1 = supports Get Features and Set Features 1 1 = supports Read Cache commands 0 1 = supports Page Cache Program command
10-31		Reserved (0)
	Manufacturer information block	
32-43	M	Device manufacturer (12 ASCII characters)
44-63	M	Device model (20 ASCII characters)
64	M	JEDEC manufacturer ID
65-66	O	Date code
67-79		Reserved (0)
	Memory organization block	
80-83	M	Number of data bytes per page

Byte	O/M	Description
84-85	M	Number of spare bytes per page
86-89	M	Number of data bytes per partial page
90-91	M	Number of spare bytes per partial page
92-95	M	Number of pages per block
96-99	M	Number of blocks per logical unit (LUN)
100	M	Number of logical units (LUNs)
101	M	Number of address cycles 4-7 Column address cycles 0-3 Row address cycles
102	M	Number of bits per cell
103-104	M	Bad blocks maximum per LUN
105-106	M	Block endurance
107	M	Guaranteed valid blocks at beginning of target
108-109	M	Block endurance for guaranteed valid blocks
110	M	Number of programs per page
111	M	Partial programming attributes 5-7 Reserved 4 1 = partial page layout is partial page data followed by partial page spare 1-3 Reserved 0 1 = partial page programming has constraints
112	M	Number of bits ECC correctability
113	M	Number of interleaved address bits 4-7 Reserved (0) 0-3 Number of interleaved address bits
114	O	Interleaved operation attributes 4-7 Reserved (0) 3 Address restrictions for program cache 2 1 = program cache supported 1 1 = no block address restrictions 0 Overlapped / concurrent interleaving support
115-127		Reserved (0)
	Electrical parameters block	
128	M	I/O pin capacitance, maximum
129-130	M	Asynchronous timing mode support 6-15 Reserved (0) 5 1 = supports timing mode 5 4 1 = supports timing mode 4 3 1 = supports timing mode 3 2 1 = supports timing mode 2 1 1 = supports timing mode 1 0 1 = supports timing mode 0, shall be 1
131-132	O	Asynchronous program cache timing mode support 6-15 Reserved (0) 5 1 = supports timing mode 5 4 1 = supports timing mode 4 3 1 = supports timing mode 3 2 1 = supports timing mode 2 1 1 = supports timing mode 1 0 1 = supports timing mode 0
133-134	M	t_{PROG} Maximum page program time (µs)
135-136	M	t_{BERS} Maximum block erase time (µs)

Byte	O/M	Description
137-138	M	t_R Maximum page read time (µs)
139-140	M	t_{CCS} Minimum change column setup time (ns)
141-142	O	Source synchronous timing mode support 4-15 Reserved (0) 3 1 = supports timing mode 3 2 1 = supports timing mode 2 1 1 = supports timing mode 1 0 1 = supports timing mode 0
143	O	Source synchronous features 2-7 Reserved (0) 1 1 = typical capacitance values present 0 tCAD value to use
144-145	O	CLK input pin capacitance, typical
146-147	O	I/O pin capacitance, typical
148-149	O	Input pin capacitance, typical
150	M	Input pin capacitance, maximum
151	M	Driver strength support 3-7 Reserved (0) 2 1 = supports Overdrive 2 drive strength 1 1 = supports Overdrive 1 drive strength 0 1 = supports driver strength settings
152-163		Reserved (0)
	Vendor block	
164-165	M	Vendor specific Revision number
166-253		Vendor specific
254-255	M	Integrity CRC
	Redundant Parameter Pages	
256-511	M	Value of bytes 0-255
512-767	M	Value of bytes 0-255
768+	O	Additional redundant parameter pages

Table 38 Parameter page definitions

5.6.1.1. Byte 0-3: Parameter page signature

This field contains the parameter page signature. When two or more bytes of the signature are valid, then it denotes that a valid copy of the parameter page is present.

Byte 0 shall be set to 4Fh.

Byte 1 shall be set to 4Eh.

Byte 2 shall be set to 46h.

Byte 3 shall be set to 49h.

5.6.1.2. Byte 4-5: Revision number

This field indicates the revisions of the ONFI specification that the target complies to. The target may support multiple revisions of the ONFI specification. This is a bit field where each defined bit corresponds to a particular specification revision that the target may support.

Bit 0 shall be cleared to zero.

Bit 1 when set to one indicates that the target supports the ONFI revision 1.0 specification.

Bit 2 when set to one indicates that the target supports the ONFI revision 2.0 specification.

Bits 3-15 are reserved and shall be cleared to zero.

5.6.1.3. Byte 6-7: Features supported

This field indicates the optional features that the target supports.

Bit 0 when set to one indicates that the target's data bus width is 16-bits. Bit 0 when cleared to zero indicates that the target's data bus width is 8-bits. The host shall use the indicated data bus width for all ONFI commands that are defined to be transferred at the bus width (x8 or x16). Note that some commands, like Read ID, always transfer data as 8-bit only. If the source synchronous data interface is supported, then the data bus width shall be 8-bits.

Bit 1 when set to one indicates that the target supports multiple LUN operations (see section 3.1.3). If bit 1 is cleared to zero, then the host shall not issue commands to a LUN unless all other LUNs on the Target are idle (i.e. R/B# is set to one).

Bit 2 when set to one indicates that the target supports non-sequential page programming operations, such that the host may program pages within a block in arbitrary order. Bit 2 when cleared to zero indicates that the target does not support non-sequential page programming operations. If bit 2 is cleared to zero, the host shall program all pages within a block in order starting with page 0.

Bit 3 when set to one indicates that the target supports interleaved operations. Refer to section 5.6.1.26.

Bit 4 when set to one indicates that there are no even / odd page restrictions for Copyback operations. Specifically, a read operation may access an odd page and then program the contents to an even page using Copyback. Alternatively, a read operation may access an even page and then program the contents to an odd page using Copyback. Bit 4 when cleared to zero indicates that the host shall ensure that Copyback reads and programs from odd page to odd page or alternatively from even page to even page.

Bit 5 when set to one indicates that the source synchronous data interface is supported by the target. If bit 5 is set to one, then the target shall indicate the source synchronous timing modes supported in the source synchronous timing mode support field. Bit 5 when cleared to zero indicates that the source synchronous data interface is not supported by the target.

Bits 6-15 are reserved and shall be cleared to zero.

5.6.1.4. Byte 8-9: Optional commands supported

This field indicates the optional commands that the target supports.

Bit 0 when set to one indicates that the target supports the Page Cache Program command. If bit 0 is cleared to zero, the host shall not issue the Page Cache Program command to the target.

Bit 1 when set to one indicates that the target supports the Read Cache Random, Read Cache Sequential, and Read Cache End commands. If bit 1 is cleared to zero, the host shall not issue the Read Cache Sequential, Read Cache Random, or Read Cache End commands to the target.

Bit 2 when set to one indicates that the target supports the Get Features and Set Features commands. If bit 2 is cleared to zero, the host shall not issue the Get Features or Set Features commands to the target.

Bit 3 when set to one indicates that the target supports the Read Status Enhanced command. If bit 3 is cleared to zero, the host shall not issue the Read Status Enhanced command to the target. Read Status Enhanced shall be supported if the target has multiple LUNs or supports interleaved operations.

Bit 4 when set to one indicates that the target supports the Copyback Program and Copyback Read commands. If bit 4 is cleared to zero, the host shall not issue the Copyback Program or Copyback Read commands to the target. If interleaved operations are supported and this bit is set to one, then interleaved copyback operations shall be supported.

Bit 5 when set to one indicates that the target supports the Read Unique ID command. If bit 5 is cleared to zero, the host shall not issue the Read Unique ID command to the target.

Bits 6-15 are reserved and shall be cleared to zero.

5.6.1.5. Byte 32-43: Device manufacturer

This field contains the manufacturer of the device. The content of this field is an ASCII character string of twelve bytes. The device shall pad the character string with spaces (20h), if necessary, to ensure that the string is the proper length.

There is no standard for how the manufacturer represents their name in the ASCII string. If the host requires use of a standard manufacturer ID, it should use the JEDEC manufacturer ID (refer to section 5.6.1.7).

5.6.1.6. Byte 44-63: Device model

This field contains the model number of the device. The content of this field is an ASCII character string of twenty bytes. The device shall pad the character string with spaces (20h), if necessary, to ensure that the string is the proper length.

5.6.1.7. Byte 64: JEDEC manufacturer ID

This field contains the JEDEC manufacturer ID for the manufacturer of the device.

5.6.1.8. Byte 65-66: Date code

This field contains a date code for the time of manufacture of the device. Byte 65 shall contain the two least significant digits of the year (e.g. a value of 05h to represent the year 2005). Byte 66 shall contain the workweek, where a value of 00h indicates the first week of January.

If the date code functionality is not implemented, the value in this field shall be 0000h.

5.6.1.9. Byte 80-83: Number of data bytes per page

This field contains the number of data bytes per page. The value reported in this field shall be a power of two. The minimum value that shall be reported is 512 bytes.

5.6.1.10. Byte 84-85: Number of spare bytes per page

This field contains the number of spare bytes per page. There are no restrictions on the value.

Appendix B lists recommendations for the number of bytes per page based on the page size and the number of bits of ECC correctability for the device.

5.6.1.11. Byte 86-89: Number of data bytes per partial page

This field contains the number of data bytes per partial page. The value reported in this field shall be a power of two. The minimum value that shall be reported is 512 bytes.

5.6.1.12. Byte 90-91: Number of spare bytes per partial page

This field contains the number of spare bytes per partial page. There are no restrictions on the value. Refer to section 5.6.1.23 for partial page programming attributes.

5.6.1.13. Byte 92-95: Number of pages per block

This field contains the number of pages per block. This value shall be a multiple of 32. Refer to section 3.1 for addressing requirements.

5.6.1.14. Byte 96-99: Number of blocks per logical unit

This field contains the number of blocks per logical unit. There are no restrictions on this value. Refer to section 3.1 for addressing requirements.

5.6.1.15. Byte 100: Number of logical units (LUNs)

This field indicates the number of logical units the target supports. Logical unit numbers are sequential, beginning with a LUN address of 0. This field shall be greater than zero.

5.6.1.16. Byte 101: Number of Address Cycles

This field indicates the number of address cycles used for row and column addresses. The reported number of address cycles shall be used by the host in operations that require row and/or column addresses (e.g. Page Program).

Bits 0-3 indicate the number of address cycles used for the row address. This field shall be greater than zero.

Bits 4-7 indicate the number of address cycles used for the column address. This field shall be greater than zero.

Note: Throughout this specification examples are shown with 2-byte column addresses and 3-byte row addresses. However, the host is responsible for providing the number of column and row address cycles in each of these sequences based on the values in this field.

5.6.1.17. Byte 102: Number of bits per cell

This field indicates the number of bits per cell in the Flash array. This field shall be greater than zero.

5.6.1.18. Byte 103-104: Bad blocks maximum per LUN

This field contains the maximum number of blocks that may be defective at manufacture and over the life of the device per LUN. The maximum rating assumes that the host is following the block endurance requirements and the ECC requirements reported in the parameter page.

5.6.1.19. Byte 105-106: Block endurance

This field indicates the maximum number of program/erase cycles per addressable page/block. This value assumes that the host is using at least the minimum ECC correctability reported in the parameter page.

A page may be programmed in partial operations subject to the value reported in the Number of programs per page field. However, programming different locations within the same page does not count against this value more than once per full page.

The block endurance is reported in terms of a value and a multiplier according to the following equation: value x $10^{multiplier}$. Byte 105 comprises the value. Byte 106 comprises the multiplier. For example, a target with an endurance of 75,000 cycles would report this as a value of 75 and a multiplier of 3 (75 x 10^3). For a write once device, the target shall report a value of 1 and a multiplier of 0. For a read-only device, the target shall report a value of 0 and a multiplier of 0. The value field shall be the smallest possible; for example 100,000 shall be reported as a value of 1 and a multiplier of 5 (1 x 10^5).

5.6.1.20. Byte 107: Guaranteed valid blocks at beginning of target

This field indicates the number of guaranteed valid blocks starting at block address 0 of the target. The minimum value for this field is 1h. The blocks are guaranteed to be valid for the endurance specified for this area (see section 5.6.1.21) when the host follows the specified number of bits to correct.

5.6.1.21. Byte 108-109: Block endurance for guaranteed valid blocks

This field indicates the maximum number of program/erase cycles per addressable page/block in the guaranteed valid block area (see section 5.6.1.20). This value requires that the host is using at least the minimum ECC correctability reported in the parameter page. This value is not encoded.

5.6.1.22. Byte 110: Number of programs per page

This field indicates the maximum number of times a portion of a page may be programmed without an erase operation. After the number of programming operations specified have been performed, the host shall issue an erase operation to that block before further program operations to the affected page. This field shall be greater than zero.

If partial page programming is supported, the host shall follow any constraints listed in section 5.6.1.23. Programming the same portion of a page without an erase operation results in indeterminate page contents. Refer to section 3.4.

5.6.1.23. Byte 111: Partial programming attributes

This field indicates the attributes for partial page programming that the target supports. Refer to section 3.4.

General Attributes:

Bit 0 when set to one indicates that there are constraints for partial page programming. When cleared to zero, there are no constraints for partial page programming. If there are constraints, the constraints are specified in the constraints section of this entry. If there are no constraints specified, a partial page may be a single byte (for x8 targets) or a single word (for x16 targets).

Bits 3-1 are reserved.

Constraints:

If bit 0 is cleared to zero, then all bits in this field shall be cleared to zero (since there are no constraints). If bit 0 is set to one, then bit 4 shall be set to one to indicate the type of constraint to the host.

Bit 4 when set to one indicates that the target supports partial page programming where the spare area for each partial page unit is directly following each partial page. Partial pages shall be written on partial page boundaries. The partial page layout for a target that supports four partial pages is shown below.

Data for Partial Page 0	Spare for Partial Page 0	Data for Partial Page 1	Spare for Partial Page 1	Data for Partial Page 2	Spare for Partial Page 2	Data for Partial Page 3	Spare for Partial Page 3

Bits 7-5 are reserved.

5.6.1.24. Byte 112: Number of bits ECC correctability

This field indicates the number of bits that the host should be able to correct per 512 bytes of data. With this specified amount of error correction by the host, the target shall achieve the block endurance specified in the parameter page. When the specified amount of error correction is applied by the host and the block endurance is followed, then the maximum number of bad blocks shall not be exceeded by the device. All used bytes in the page shall be protected by ECC including the spare bytes if the minimum ECC requirement has a value greater than zero.

When this value is cleared to zero, the target shall return only valid data and if it cannot it shall fail the command.

5.6.1.25. Byte 113: Interleaved addressing

This field describes parameters for interleaved addressing.

Bits 0-3 indicate the number of bits that are used for interleaved addressing. This value shall be greater than 0h when interleaved operations are supported. For information on the interleaved address location, refer to section 3.1.1.

Bits 4-7 are reserved.

5.6.1.26. Byte 114: Interleaved operation attributes

This field describes attributes for interleaved operations. This byte is mandatory when interleaved operations are supported as indicated in the Features supported field.

Bit 0 indicates whether overlapped interleaved operations are supported. If bit 0 is set to one, then overlapped interleaved operations are supported. If bit 0 is cleared to zero, then concurrent interleaved operations are supported.

Bit 1 indicates that there are no block address restrictions for the interleaved operation. If set to one all block address bits may be different between interleaved operations. If cleared to zero all block address bits (other than the interleaved address bits) shall be the same. This restriction applies to all interleaved operations (Program, Erase, and Copyback Program).

Bit 2 indicates whether program cache is supported with interleaved programs. If set to one then program cache is supported for interleaved program operations. If cleared to zero then program cache is not supported for interleaved program operations. Note that program cache shall not be used with interleaved copyback program operations. See bit 3 for restrictions on the interleaved addresses that may be used.

Bit 3 indicates whether interleaved addresses may change during a program cache sequence between 15h commands. If set to one, then the host may change the number and value of interleaved addresses in the cache program sequence. If cleared to zero, then for each program cache operation the interleaved addresses and number of interleaved addresses issued to the LUN shall be the same.

Bits 4-7 are reserved.

5.6.1.27. Byte 128: I/O pin capacitance, maximum

This field indicates the maximum I/O pin capacitance for the target in pF. This may be used by the host to calculate the load for the data bus. Refer to section 2.11.

5.6.1.28. Byte 129-130: Asynchronous timing mode support

This field indicates the asynchronous timing modes supported. The target shall always support asynchronous timing mode 0.

Bit 0 shall be set to one. It indicates that the target supports asynchronous timing mode 0.

Bit 1 when set to one indicates that the target supports asynchronous timing mode 1.

Bit 2 when set to one indicates that the target supports asynchronous timing mode 2.

Bit 3 when set to one indicates that the target supports asynchronous timing mode 3.

Bit 4 when set to one indicates that the target supports asynchronous timing mode 4.

Bit 5 when set to one indicates that the target supports asynchronous timing mode 5.

Bits 6-15 are reserved and shall be cleared to zero.

5.6.1.29. Byte 131-132: Asynchronous program cache timing mode support

This field indicates the asynchronous timing modes supported for Page Cache Program operations. This value is mandatory if Page Cache Program is implemented. If Page Cache Program is not implemented, this field shall be cleared to zero.

Bit 0 when set to one indicates that the target supports asynchronous timing mode 0 for program cache operations.

Bit 1 when set to one indicates that the target supports asynchronous timing mode 1 for program cache operations.

Bit 2 when set to one indicates that the target supports asynchronous timing mode 2 for program cache operations.

Bit 3 when set to one indicates that the target supports asynchronous timing mode 3 for program cache operations.

Bit 4 when set to one indicates that the target supports asynchronous timing mode 4 for program cache operations.

Bit 5 when set to one indicates that the target supports asynchronous timing mode 5 for program cache operations.

Bits 6-15 are reserved and shall be cleared to zero.

5.6.1.30. Byte 133-134: Maximum page program time

This field indicates the maximum page program time (tPROG) in microseconds.

5.6.1.31. Byte 135-136: Maximum block erase time

This field indicates the maximum block erase time (tBERS) in microseconds.

5.6.1.32. Byte 137-138: Maximum page read time

This field indicates the maximum page read time (tR) in microseconds.

5.6.1.33. Byte 139-140: Minimum change column setup time.

This field indicates the minimum change column setup time (tCCS) in nanoseconds. After issuing a Change Read Column command, the host shall not read data until a minimum of tCCS time has elapsed. After issuing a Change Write Column command including all column address cycles, the host shall not write data until a minimum of tCCS time has elapsed. The value of tCCS shall always be longer than or equal to tWHR and tADL when the source synchronous data interface is supported.

5.6.1.34. Byte 141-142: Source synchronous timing mode support

This field indicates the source synchronous timing modes supported. If the source synchronous data interface is supported by the target, at least one source synchronous timing mode shall be supported. The target shall support an inclusive range of source synchronous timing modes (i.e. if timing mode n-1 and n+1 are supported, then the target shall also support timing mode n).

Bit 0 when set to one indicates that the target supports source synchronous timing mode 0.

Bit 1 when set to one indicates that the target supports source synchronous timing mode 1.

Bit 2 when set to one indicates that the target supports source synchronous timing mode 2.

Bit 3 when set to one indicates that the target supports source synchronous timing mode 3.

Bits 4-15 are reserved and shall be cleared to zero.

5.6.1.35. Byte 143: Source synchronous features

This field describes features and attributes for source synchronous operation. This byte is mandatory when the source synchronous data interface is supported.

Bit 0 indicates the tCAD value that shall be used by the host. If bit 0 is set to one, then the host shall use the tCADs (slow) value in source synchronous command, address and data transfers. If bit 0 is cleared to zero, then the host shall use the tCADf (fast) value in source synchronous command, address and data transfers.

Bit 1 indicates if the typical CLK, I/O and input pin capacitance values are reported in the parameter page. If bit 1 is set to one, then the typical CLK, I/O and input pin capacitance values are reported in the parameter page. If bit 1 is cleared to zero, then the typical capacitance fields are not used.

Bits 2-7 are reserved.

5.6.1.36. Byte 144-145: CLK input pin capacitance, typical

This field indicates the typical CLK input pin capacitance for the target. This value applies to the CLK and CLK# signals. This field is specified in 0.1 pF units. For example, a value of 31 corresponds to 3.1 pF. The variance from this value is less than +/- 0.25 pF per LUN. As an example, if two LUNs are present than the total variance is less than +/- 0.5 pF. This value is only valid if the typical capacitance values are supported as indicated in the source synchronous features field. Additional constraints on the CLK input pin capacitance are specified in section 4.2.3.

5.6.1.37. Byte 146-147: I/O pin capacitance, typical

This field indicates the typical I/O pin capacitance for the target. This field is specified in 0.1 pF units. For example, a value of 31 corresponds to 3.1 pF. The variance from this value is less than +/- 0.5 pF per LUN. As an example, if two LUNs are present than the total variance is less than +/- 1 pF. This value is only valid if the typical capacitance values are supported as indicated in the source synchronous features field. Additional constraints on the I/O pin capacitance are specified in section 4.2.3.

5.6.1.38. Byte 148-149: Input pin capacitance, typical

This field indicates the typical input pin capacitance for the target. This value applies to all inputs except the following: CLK, CLK#, CE# and WP# signals. This field is specified in 0.1 pF units. For example, a value of 31 corresponds to 3.1 pF. The variance from this value is less than +/- 0.5 pF per LUN. As an example, if two LUNs are present than the total variance is less than +/- 1 pF. This value is only valid if the typical capacitance values are supported as indicated in the source synchronous features field. Additional constraints on the input pin capacitance are specified in section 4.2.3.

5.6.1.39. Byte 150: Input pin capacitance, maximum

This field indicates the maximum input pin capacitance for the target in pF. This value applies to all inputs, including CLK, CLK#, CE#, and WP#. This may be used by the host to calculate the load for the data bus. Refer to section 2.11.

5.6.1.40. Byte 151: Driver strength support

This field describes if the target supports configurable driver strengths and its associated features.

Bit 0 when set to one indicates that the target supports configurable driver strength settings as defined in Table 21. If this bit is set to one, then the device shall support both the Nominal and Underdrive settings. If this bit is set to one, then the device shall power-on with a driver strength at the Nominal value defined in Table 21. If this bit is cleared to zero, then the driver strength at power-on is undefined. This bit shall be set to one for devices that support the source synchronous data interface.

Bit 1 when set to one indicates that the target supports the Overdrive 1 setting in Table 21 for use in the I/O Drive Strength setting. This bit shall be set to one for devices that support the source synchronous data interface.

Bit 2 when set to one indicates that the target supports the Overdrive 2 setting in Table 21 for use in the I/O Drive Strength setting. This bit shall be set to one for devices that support the source synchronous data interface.

Bits 3-7 are reserved.

5.6.1.41. Byte 164-165: Vendor specific Revision number

This field indicates a vendor specific revision number. This field should be used by vendors to indicate the supported layout for the vendor specific parameter page area and the vendor specific feature addresses. The format of this field is vendor specific.

5.6.1.42. Byte 166-253: Vendor specific

This field is reserved for vendor specific use.

5.6.1.43. Byte 254-255: Integrity CRC

The Integrity CRC (Cyclic Redundancy Check) field is used to verify that the contents of the parameters page were transferred correctly to the host. The CRC of the parameter page is a word (16-bit) field. The CRC calculation covers all of data between byte 0 and byte 253 of the parameter page inclusive.

The CRC shall be calculated on byte (8-bit) quantities starting with byte 0 in the parameter page. The bits in the 8-bit quantity are processed from the most significant bit (bit 7) to the least significant bit (bit 0).

The CRC shall be calculated using the following 16-bit generator polynomial:

$$G(X) = X_{16} + X_{15} + X_2 + 1$$

This polynomial in hex may be represented as 8005h.

The CRC value shall be initialized with a value of 4F4Eh before the calculation begins. There is no XOR applied to the final CRC value after it is calculated. There is no reversal of the data bytes or the CRC calculated value.

5.6.1.44. Byte 256-511: Redundant Parameter Page 1

This field shall contain the values of bytes 0-255 of the parameter page. Byte 256 is the value of byte 0.

The redundant parameter page is used when the integrity CRC indicates that there was an error in bytes 0-255. The redundant parameter page shall be stored in non-volatile media; the target shall not create these bytes by retransmitting the first 256 bytes.

5.6.1.45. Byte 512-767: Redundant Parameter Page 2

This field shall contain the values of bytes 0-255 of the parameter page. Byte 512 is the value of byte 0.

The redundant parameter page is used when the integrity CRC indicates that there was an error in bytes 0-255 and in the first redundant parameter page. The redundant parameter page shall be stored in non-volatile media; the target shall not create these bytes by retransmitting the first 256 bytes.

5.6.1.46. Byte 768+: Additional Redundant Parameter Pages

Bytes at offset 768 and above may contain additional redundant copies of the parameter page. There is no limit to the number of redundant parameter pages that the target may provide. The target may provide additional copies to guard against the case where all three mandatory copies have invalid CRC checks.

The host should determine whether an additional parameter page is present by checking the first Dword. If at least two out of four bytes match the parameter page signature, then an additional parameter page is present.

5.7. Read Unique ID Definition

The Read Unique ID function is used to retrieve the 16 byte unique ID (UID) for the device. The unique ID when combined with the device manufacturer shall be unique.

The UID data may be stored within the Flash array. To allow the host to determine if the UID is without bit errors, the UID is returned with its complement, as shown in Table 39. If the XOR of the UID and its bit-wise complement is all ones, then the UID is valid.

Bytes	Value
0-15	UID
16-31	UID complement (bit-wise)

Table 39 UID and Complement

To accommodate robust retrieval of the UID in the case of bit errors, sixteen copies of the UID and the corresponding complement shall be stored by the target. For example, reading bytes 32-63 returns to the host another copy of the UID and its complement.

Read Status Enhanced shall not be used during execution of the Read Unique ID command.

Figure 50 defines the Read Unique ID behavior. The host may use any timing mode supported by the target in order to retrieve the UID data.

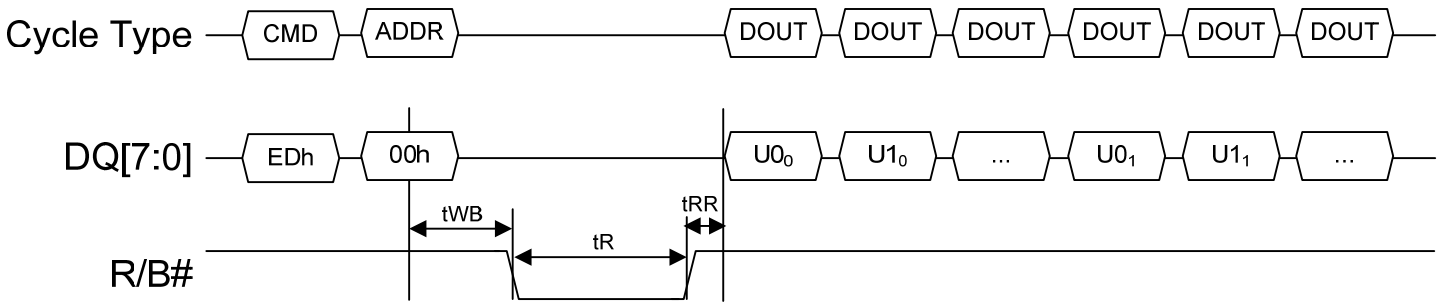

Figure 50 Read Unique ID command timing

$U0_k$-Un_k The kth copy of the UID and its complement. Sixteen copies are stored. Reading beyond 512 bytes returns indeterminate values.

5.8. Block Erase Definition

The Block Erase function erases the block of data identified by the block address parameter on the LUN specified. After a successful Block Erase, all bits shall be set to one in the block. SR[0] is valid for this command after SR[6] transitions from zero to one until the next transition of SR[6] to zero. Figure 51 defines the Block Erase behavior and timings.

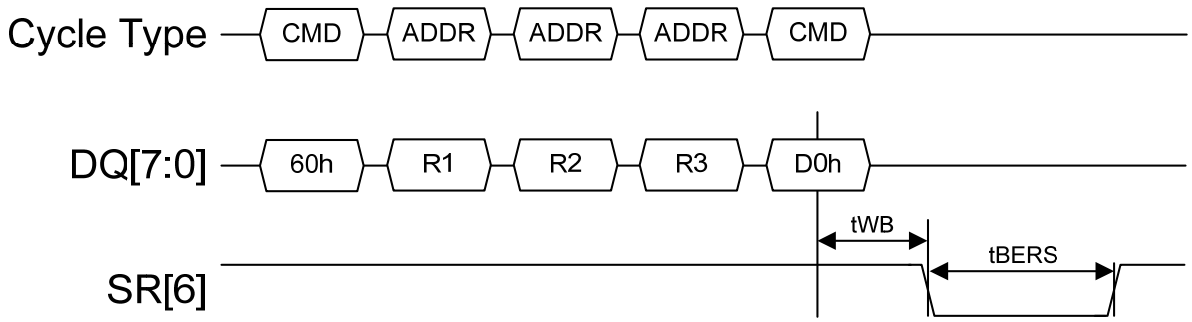

Figure 51 Block Erase timing

R1-R3 The row address of the block to be erased. R1 is the least significant byte in the row address.

5.9. Read Status Definition

In the case of non-interleaved operations, the Read Status function retrieves a status value for the last operation issued. If multiple interleaved operations are in progress on a single LUN, then Read Status returns the composite status value for status register bits that are independent per interleaved address. Specifically, Read Status shall return the combined status value of the independent status register bits according to Table 40. See section 5.12 for status register bit definitions.

Status Register bit	Composite status value
Bit 0, FAIL	OR
Bit 1, FAILC	OR

Table 40 Composite Status Value

When issuing Read Status in the source synchronous data interface, each data byte is received twice. The host shall only latch one copy of each data byte. See section 4.3.2.4.

Figure 52 defines the Read Status behavior and timings.

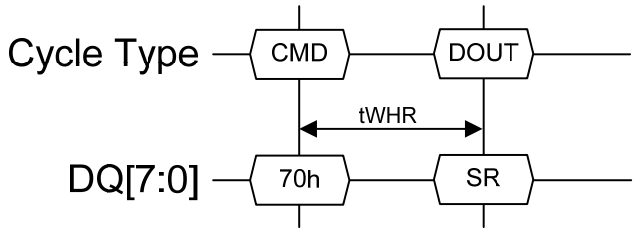

Figure 52 Read Status timing

SR Status value as defined in section 5.12.

5.10. Read Status Enhanced Definition

The Read Status Enhanced function retrieves the status value for a previous operation on the particular LUN and interleaved address specified. Figure 53 defines the Read Status Enhanced behavior and timings. If the row address entered is invalid, the Status value returned has an indeterminate value. The host uses Read Status Enhanced for LUN selection (refer to section 3.1.2). Note that Read Status Enhanced has no effect on which page register is selected for data output within the LUN.

When issuing Read Status Enhanced in the source synchronous data interface, each data byte is received twice. The host shall only latch one copy of each data byte. See section 4.3.2.4.

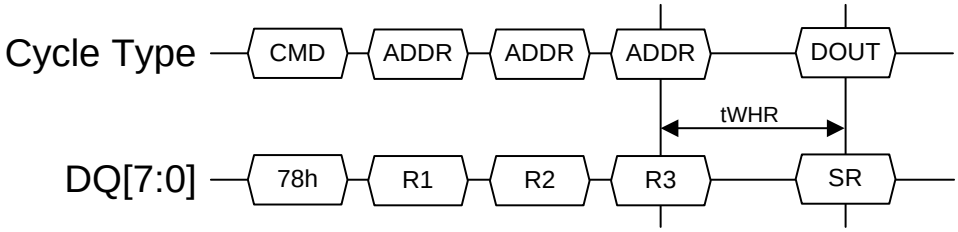

Figure 53 Read Status Enhanced timing

R1-R3 Row address of the previous operation to retrieve status for. R1 is the least significant byte. The row address contains both the LUN and interleaved address to retrieve status for.

SR Status value as defined in section 5.12.

5.11. Read Status and Read Status Enhanced required usage

In certain sequences only one status command shall be used by the host. This section outlines situations in which a particular status command is required to be used.

If a command is issued to a LUN while R/B# is cleared to zero, then the next status command shall be Read Status Enhanced. Read Status Enhanced causes LUNs that are not selected to turn off their output buffers. This ensures that only the LUN selected by the Read Status Enhanced commands responds to a subsequent toggle of the RE# input signal.

When the host has issued Read Page commands to multiple LUNs at the same time, the host shall issue Read Status Enhanced before reading data from either LUN. Read Status Enhanced causes LUNs that are not selected to turn off their output buffers. This ensures that only the LUN selected by the Read Status Enhanced commands responds to a subsequent toggle of the RE# input signal after data output is selected with the 00h command.

During and after Target level commands, the host shall not issue the Read Status Enhanced command. In these sequences, the host uses Read Status to check for the status value. The only exception to this requirement is if commands were outstanding to multiple LUNs when a Reset was issued. In this case, the Read Status Enhanced command shall be used to determine when each active LUN has completed Reset.

5.12. Status Field Definition

The returned status register byte value (SR) for Read Status and Read Status Enhanced has the format described below. If the RDY bit is cleared to zero, all other bits in the status byte (except WP#) are invalid and shall be ignored by the host.

Value	**7**	**6**	**5**	**4**	**3**	**2**	**1**	**0**
Status Register	WP#	RDY	ARDY	VSP	R	R	FAILC	FAIL

FAIL If set to one, then the last command failed. If cleared to zero, then the last command was successful. This bit is only valid for program and erase operations. During program cache operations, this bit is only valid when ARDY is set to one.

FAILC If set to one, then the command issued prior to the last command failed. If cleared to zero, then the command issued prior to the last command was successful. This bit is only valid for program cache operations. This bit is not valid until after the second 15h command or the 10h command has been transferred in a Page Cache Program sequence. When program cache is not supported, this bit is not used.

ARDY If set to one, then there is no array operation in progress. If cleared to zero, then there is a command being processed (RDY is cleared to zero) or an array operation in progress. When overlapped interleaved operations or cache commands are not supported, this bit is not used.

RDY If set to one, then the LUN or interleaved address is ready for another command and all other bits in the status value are valid. If cleared to zero, then the last command issued is not yet complete and SR bits 5:0 are invalid and shall be ignored by the host. This bit impacts the value of R/B#, refer to section 2.15.2. When caching operations are in use, then this bit indicates whether another command can be accepted, and ARDY indicates whether the last operation is complete.

WP# If set to one, then the device is not write protected. If cleared to zero, then the device is write protected. This bit shall always be valid regardless of the state of the RDY bit.

R Reserved (0)

VSP Vendor Specific

5.13. Read Definition

The Read function reads a page of data identified by a row address for the LUN specified. The page of data is made available to be read from the page register starting at the column address specified. Figure 54 defines the Read behavior and timings. Reading beyond the end of a page results in indeterminate values being returned to the host.

While monitoring the read status to determine when the tR (transfer from Flash array to page register) is complete, the host shall re-issue a command value of 00h to start reading data. Issuing a command value of 00h will cause data to be returned starting at the selected column address.

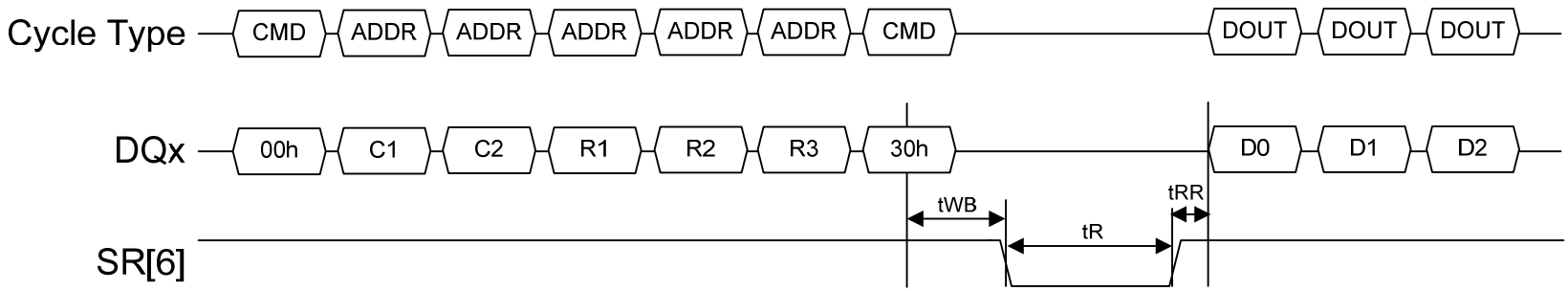

Figure 54 Read timing

C1-C2 Column address of the page to retrieve. C1 is the least significant byte.

R1-R3 Row address of the page to retrieve. R1 is the least significant byte.

Dn Data bytes read from the addressed page.

5.14. Read Cache Definition

The Read Cache Sequential and Read Cache Random functions permit a page to be read from the page register while another page is simultaneously read from the Flash array for the selected LUN. A Read Page command, as defined in section 5.13, shall be issued prior to the initial Read Cache Sequential or Read Cache Random command in a read cache sequence. A Read Cache Sequential or Read Cache Random command shall be issued prior to a Read Cache End (3Fh) command being issued.

The Read Cache (Sequential or Random) function may be issued after the Read function is complete (SR[6] is set to one). The host may enter the address of the next page to be read from the Flash array. Data output always begins at column address 00h. If the host does not enter an address to retrieve, the next sequential page is read. When the Read Cache (Sequential or Random) function is issued, SR[6] is cleared to zero (busy). After the operation is begun SR[6] is set to one (ready) and the host may begin to read the data from the previous Read or Read Cache (Sequential or Random) function. Issuing an additional Read Cache (Sequential or Random) function copies the data most recently read from the array into the page register. When no more pages are to be read, the final page is copied into the page register by issuing the 3Fh command. The host may begin to read data from the page register when SR[6]is set to one (ready). When the 31h and 3Fh commands are issued, SR[6] shall be cleared to zero (busy) until the page has finished being copied from the Flash array.

The host shall not issue a Read Cache Sequential (31h) command after the last page of a block is read. If commands are issued to multiple LUNs at the same time, the host shall execute a Read Status Enhanced (78h) command to select the LUN prior to issuing a Read Cache Sequential (31h) or Read Cache End (3Fh) command for that LUN.

Figure 55 defines the Read Cache Sequential behavior and timings for the beginning of the cache operations subsequent to a Read command being issued to the target. Figure 56 defines the Read Cache Random behavior and timings for the beginning of the cache operations subsequent to a Read command being issued to the target. In each case, SR[6] conveys whether the next selected page can be read from the page register.

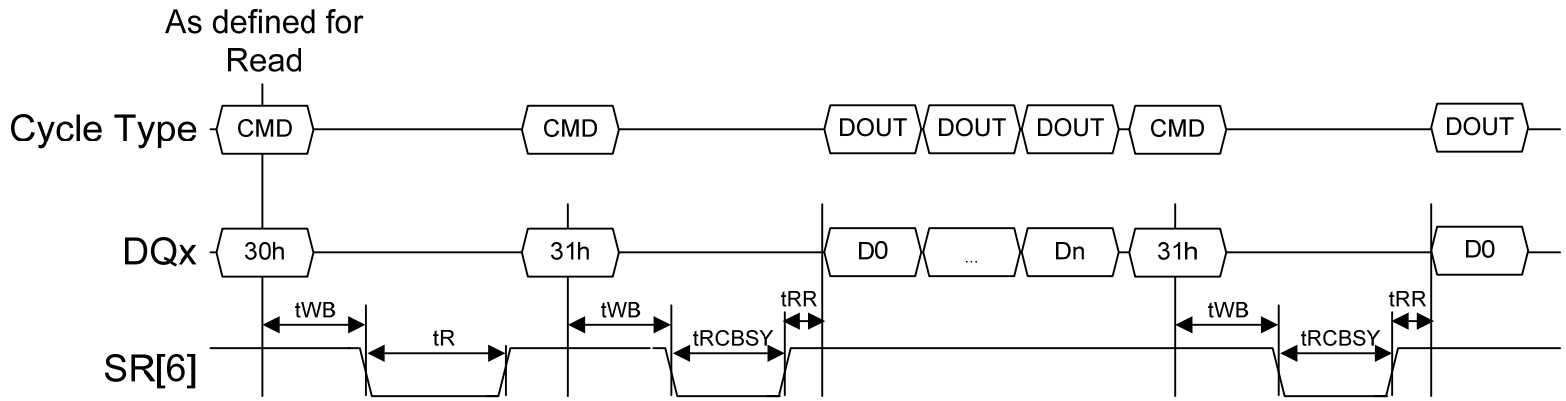

Figure 55 Read Cache Sequential timing, start of cache operations

D0-Dn Data bytes/words read from page requested by the original Read or the previous cache operation.

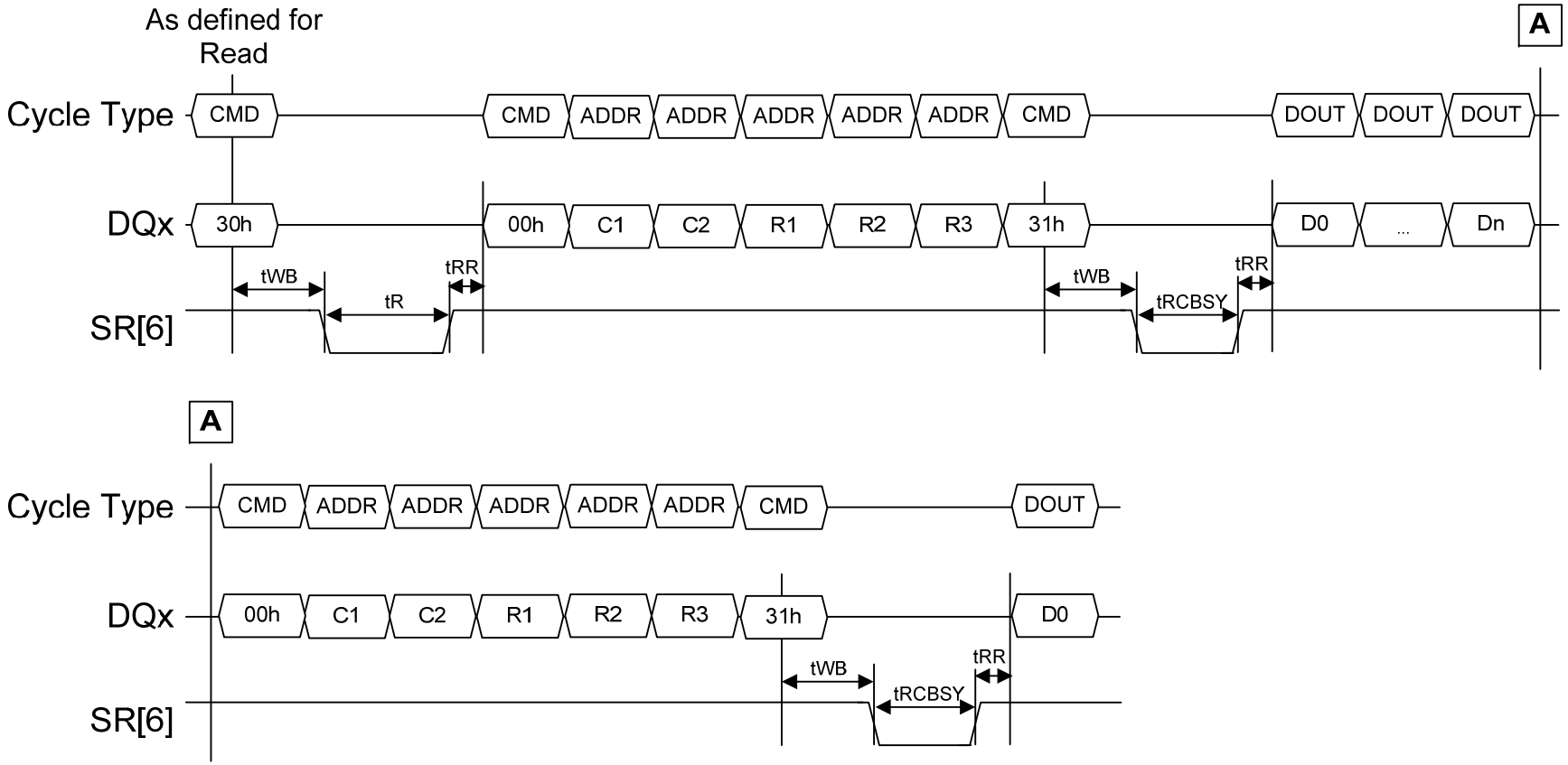

Figure 56 Read Cache Random timing, start of cache operations

C1-C2 Column address of the page to retrieve. C1 is the least significant byte. The column address is ignored.

R1-R3 Row address of the page to retrieve. R1 is the least significant byte.

D0-Dn Data bytes/words read from page requested by the original Read or the previous cache operation

Figure 57 defines the Read Cache (Sequential or Random) behavior and timings for the end of cache operations. This applies for both Read Cache Sequential and Read Cache Random. A command code of 3Fh indicates to the target to transfer the final selected page into the page register, without beginning another background read operation.

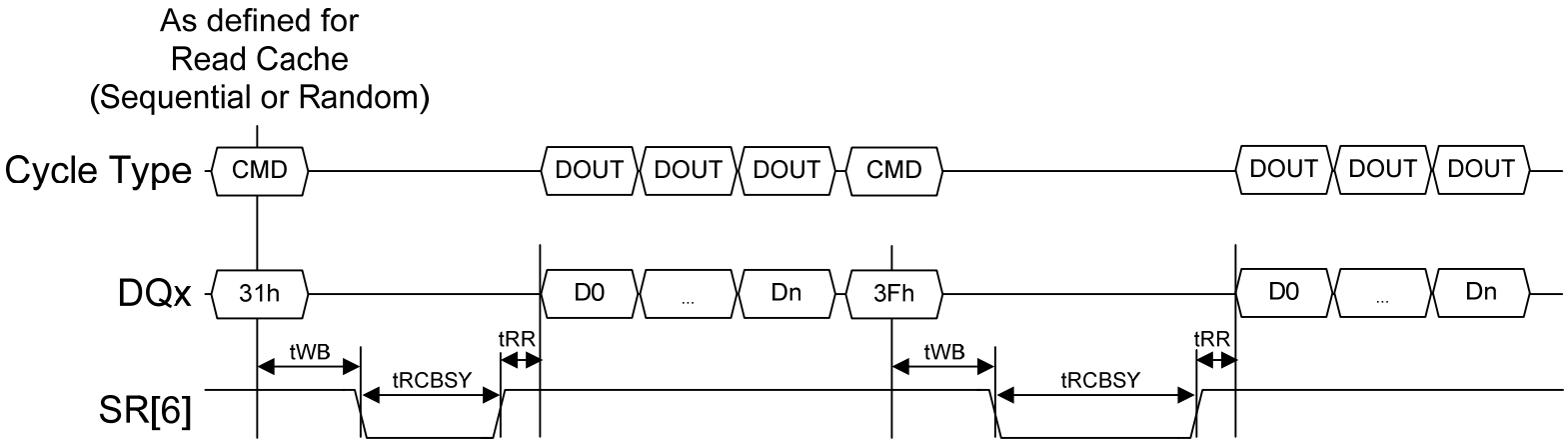

Figure 57 Read Cache timing, end of cache operations

D0-Dn Data bytes/words read from page requested by the previous cache operation.

5.15. Page Program Definition

The Page Program command transfers a page or portion of a page of data identified by a column address to the page register. The contents of the page register are then programmed into the Flash array at the row address indicated. SR[0] is valid for this command after SR[6] transitions from zero to one until the next transition of SR[6] to zero. Figure 58 defines the Page Program behavior and timings. Writing beyond the end of the page register is undefined.

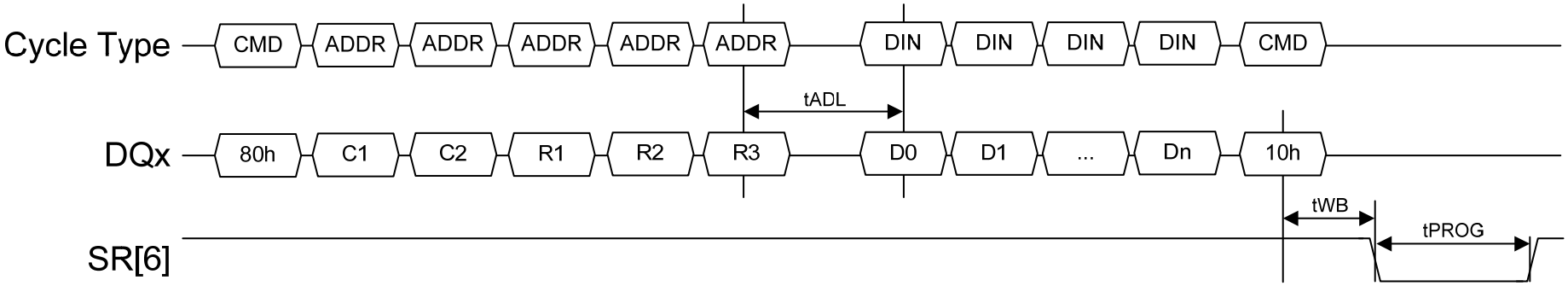

Figure 58 Page Program timing

C1-C2 Column address of the starting buffer location to write data to. C1 is the least significant byte.

R1-R3 Row address of the page being programmed. R1 is the least significant byte.

D0-Dn Data bytes/words to be written to the addressed page.

5.16. Page Cache Program Definition

The Page Cache Program function permits a page or portion of a page of data to be written to the Flash array for the specified LUN in the background while the next page to program is transferred by the host to the page register. After the 10h command is issued, all data is written to the Flash array prior to SR[6] being set to one (ready). SR[0] is valid for this command after SR[5] transitions from zero to one until the next transition. SR[1] is valid for this command after SR[6] transitions from zero to one, and this is not the first operation.

Figure 59 and Figure 60 define the Page Cache Program behavior and timings. Note that tPROG at the end of the caching operation may be longer than typical as this time also accounts for completing the programming operation for the previous page. Writing beyond the end of the page register is undefined.

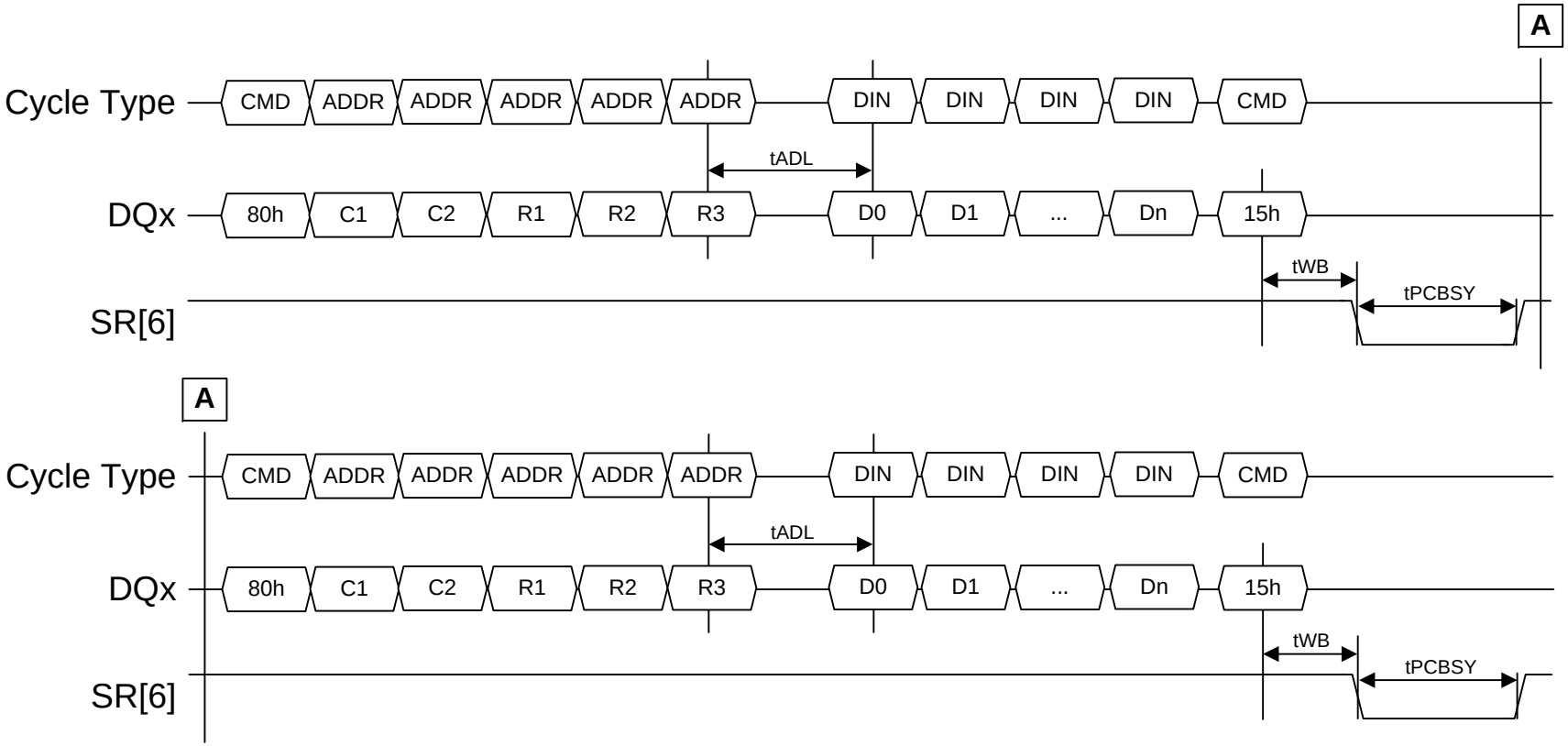

Figure 59 Page Cache Program timing, start of operations

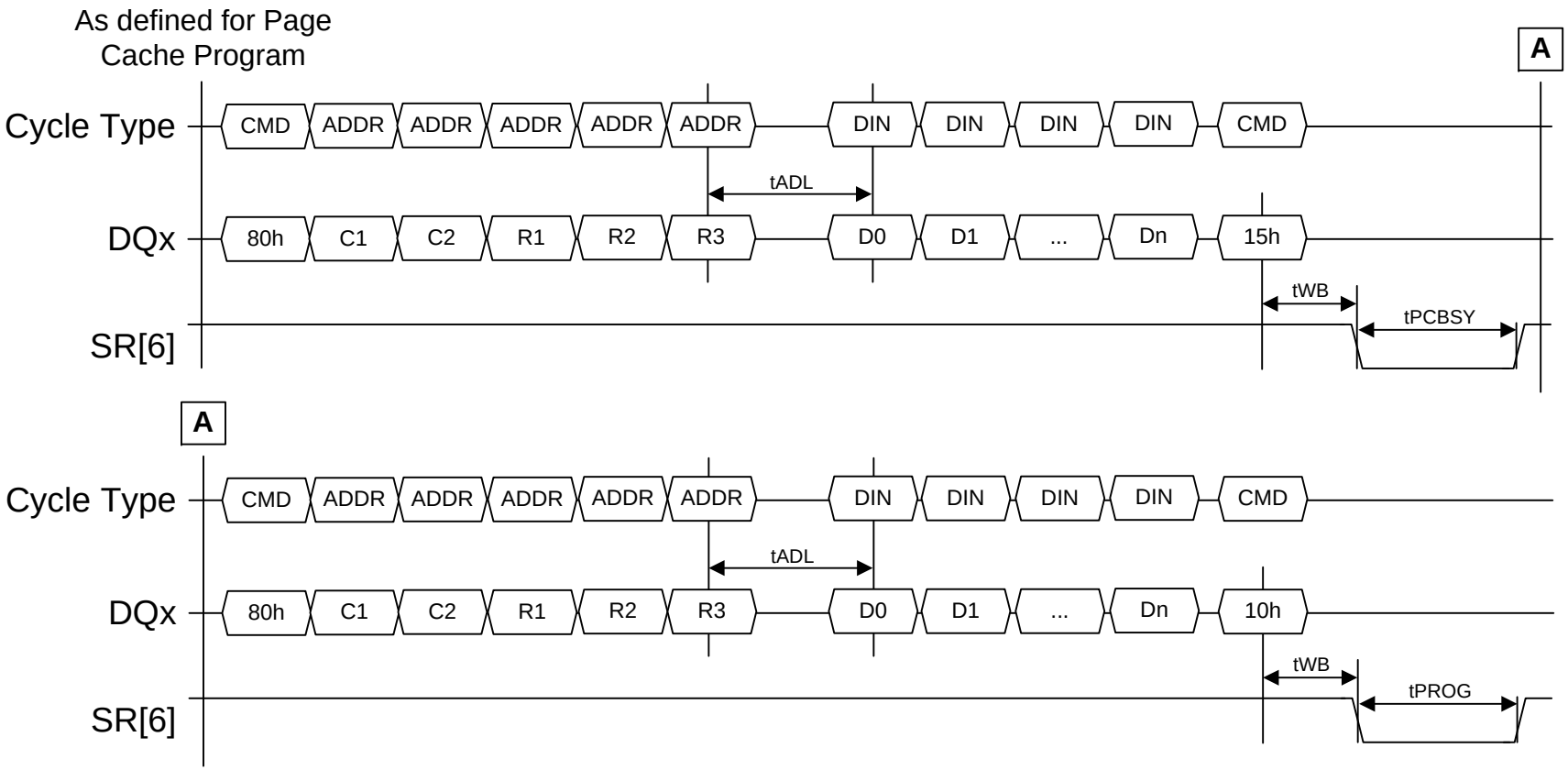

Figure 60 Page Cache Program timing, end of operations

C1-C2 Column address of the starting buffer location to write data to. C1 is the least significant byte.

R1-R3 Row address of the page being programmed. R1 is the least significant byte.

D0-Dn Data bytes/words to be written to the addressed page.

5.17. Copyback Definition

The Copyback function reads a page of data from one location and then moves that data to a second location on the same LUN. The data read from the first location may be read by the host, including use of Change Read Column. After completing any data read out and issuing Copyback Program, the host may perform data modification using Change Write Column as needed. Figure 61 defines the Copyback behavior and timings.

Copyback uses a single page register for the read and program operation. When interleaved addressing is supported, the interleaved address for Copyback Read and Copyback Program for a non-interleaved Copyback operation shall be the same.

Copyback may also have odd/even page restrictions. Specifically, when reading from an odd page, the contents may need to be written to an odd page. Alternatively, when reading from an even page, the contents may need to be written to an even page. Refer to section 5.6.1.3.

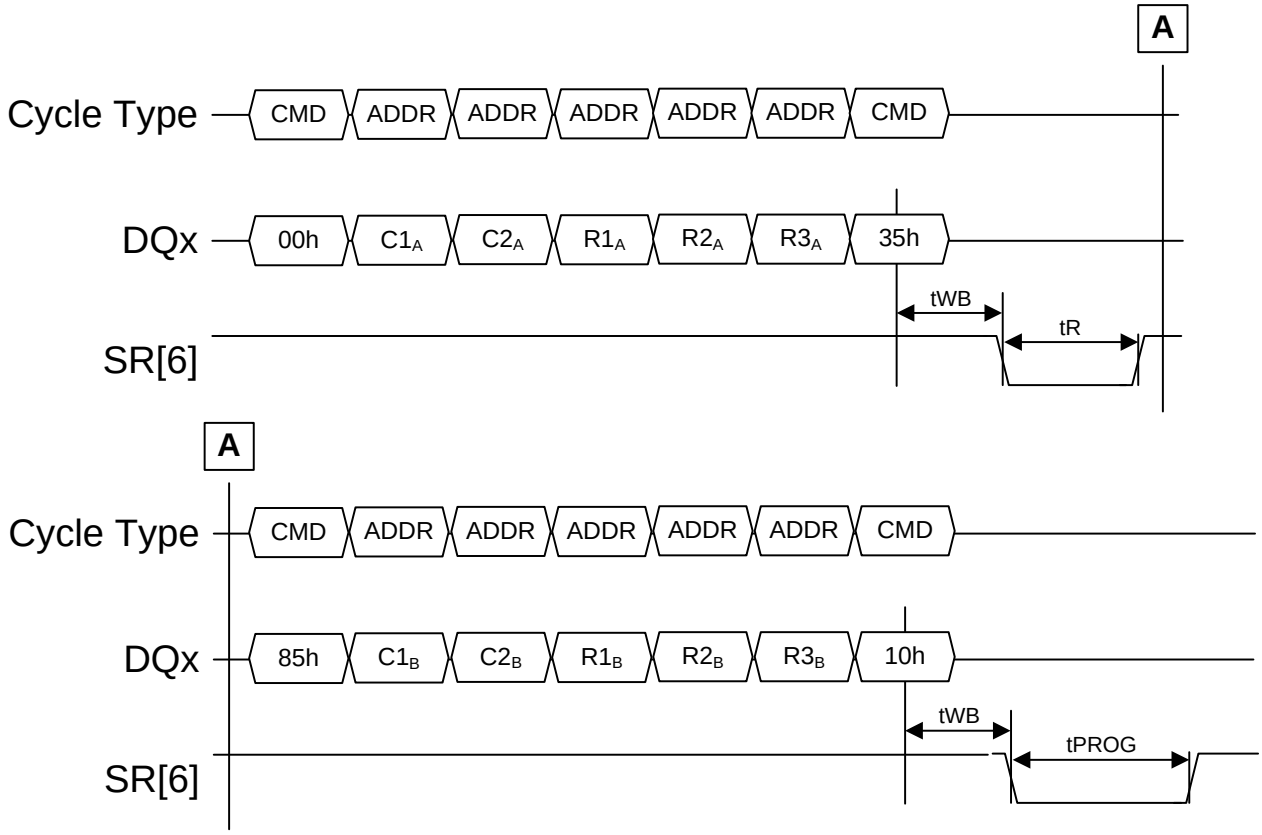

Figure 61 Copyback timing

$C1\text{-}C2_A$	Column address of the page to retrieve. $C1_A$ is the least significant byte.
$R1\text{-}R3_A$	Row address of the page to retrieve. $R1_A$ is the least significant byte.
$C1\text{-}C2_B$	Column address of the page to program. $C1_B$ is the least significant byte.
$R1\text{-}R3_B$	Row address of the page to program. $R1_B$ is the least significant byte.

Figure 62 and Figure 63 define Copyback support for data output and data modification.

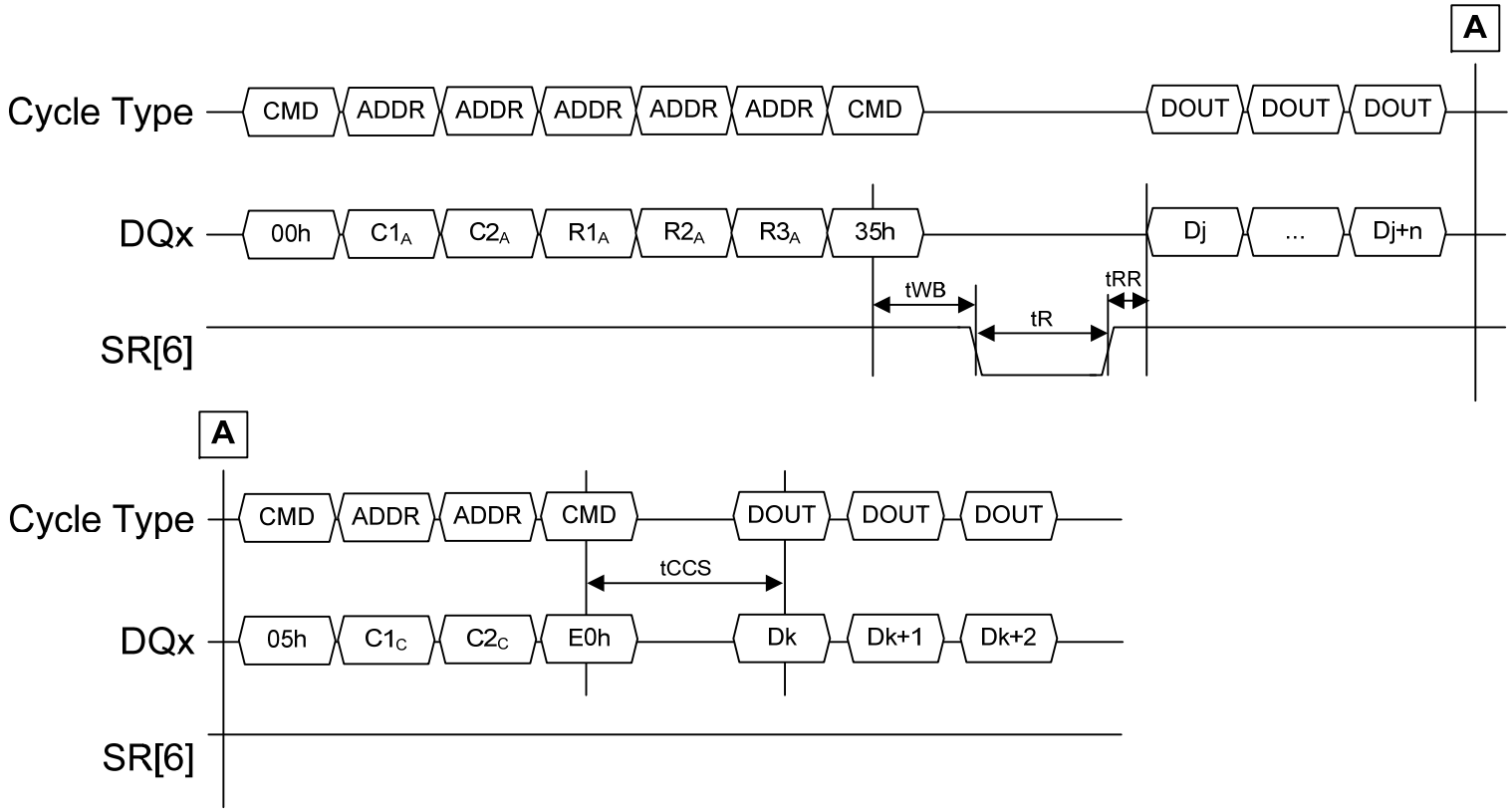

Figure 62 Copyback with data output

C1-C2$_A$	Column address of the page to retrieve. C1$_A$ is the least significant byte.
R1-R3$_A$	Row address of the page to retrieve. R1$_A$ is the least significant byte.
Dj-(Dj+n)	Data bytes read starting at column address specified in C1$_A$.

C1-C2$_C$ Column address of new location (k) to read out from the page register. C1$_C$ is the least significant byte.

Dk-Dk+n Data bytes read starting at column address specified in C1$_{C.}$

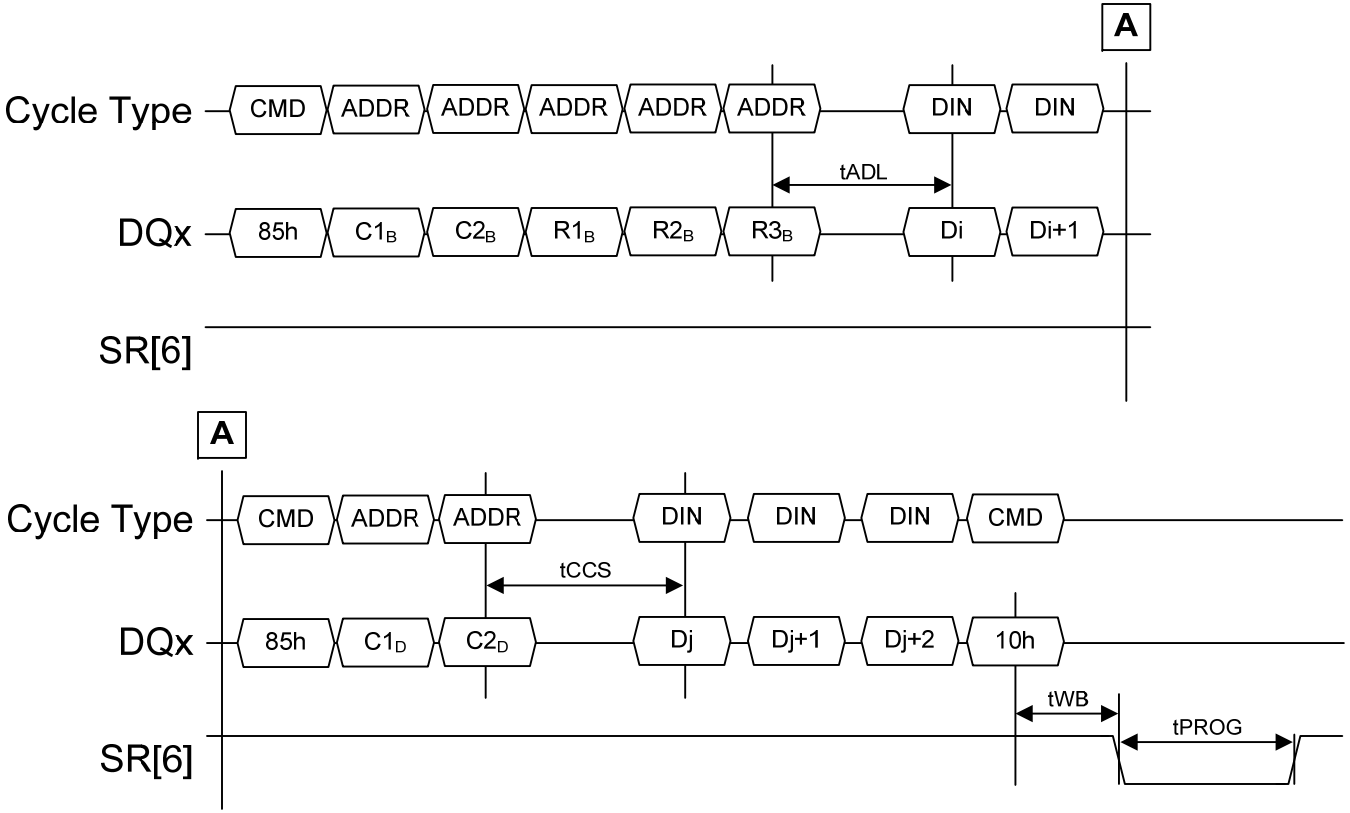

Figure 63 Copyback with data modification

C1-C2$_B$ Column address of the page to program. C1$_B$ is the least significant byte.

R1-R3 $_B$	Row address of the page to program. $R1_B$ is the least significant byte.
Di-Di+n	Data bytes overwritten in page register starting at column address specified in $C1_{B.}$
C1-$C2_D$	Column address of new location (j) to overwrite data at in the page register. $C1_D$ is the least significant byte.
Dj-Dj+n	Data bytes overwritten starting at column address specified in $C1_{D.}$

5.18. Change Read Column Definition

The Change Read Column function changes the column address from which data is being read in the page register for the selected LUN. Change Read Column shall only be issued when the LUN is in a read idle condition. Figure 64 defines the Change Read Column behavior and timings.

The host shall not read data from the LUN until tCCS ns after the E0h command is written to the LUN. Refer to Figure 64.

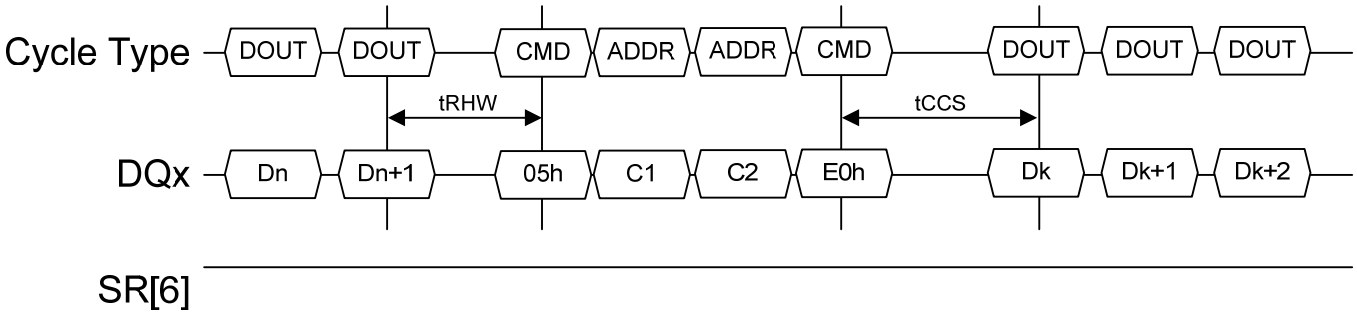

Figure 64 Change Read Column timing

Dn Data bytes read prior to the column address change.

C1-C2 New column address to be set for subsequent data transfers. C1 is the least significant byte.

Dk Data bytes being read starting with the new addressed column.

5.19. Change Write Column Definition

The Change Write Column function changes the column address being written to in the page register for the selected LUN. Figure 65 defines the Change Write Column behavior and timings.

The host shall not write data to the LUN until tCCS ns after the last column address is written to the LUN. Refer to Figure 64.

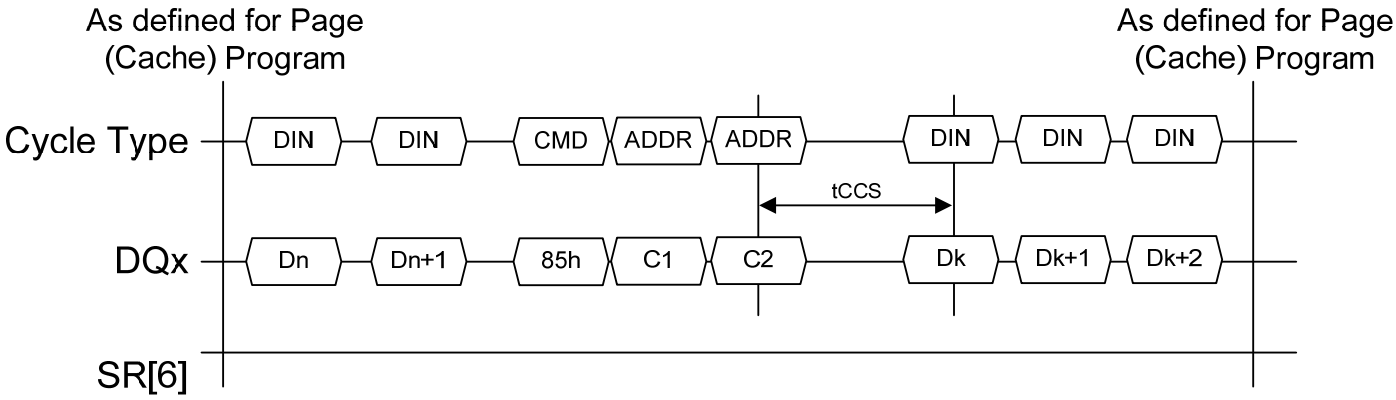

Figure 65 Change Write Column timing

C1-C2 New column address to be set for subsequent data transfers. C1 is the least significant byte.

Dn Data bytes being written to previous addressed column

Dk Data bytes being written starting with the new addressed column

5.20. Set Features Definition

The Set Features function modifies the settings of a particular feature. For example, this function can be used to enable a feature that is disabled at power-on. Parameters are always transferred on the lower 8-bits of the data bus. Figure 66 defines the Set Features behavior and timings.

When issuing Set Features in the source synchronous data interface, each data byte is transmitted twice. The device shall only latch one copy of each data byte. See section 4.3.2.3.

Set Features is used to change the timing mode and data interface type. When changing the timing mode, the device is busy for tITC, not tFEAT. During the tITC time the host shall not poll for status.

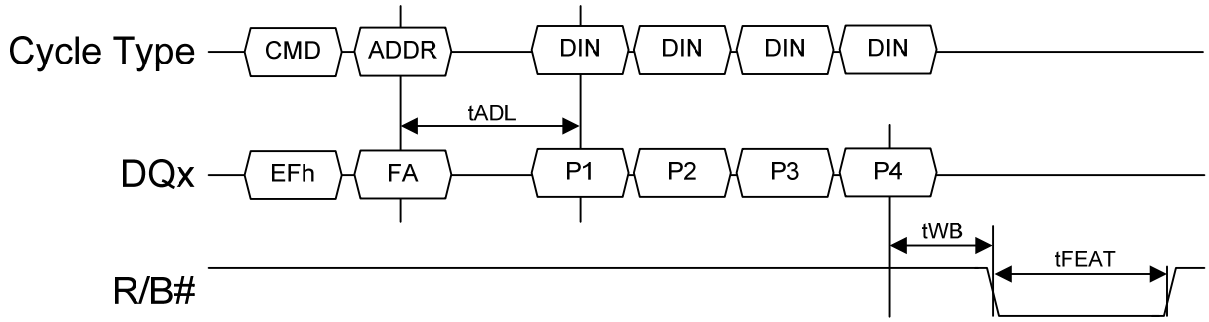

Figure 66 Set Features timing

* Note: Busy time is tITC when setting the timing mode.

FA Feature address identifying feature to modify settings for.

P1-P4 Parameters identifying new settings for the feature specified.

P1 Sub feature parameter 1
P2 Sub feature parameter 2
P3 Sub feature parameter 3
P4 Sub feature parameter 4

Refer to section 5.22 for the definition of features and sub feature parameters.

5.21. Get Features Definition

The Get Features function is the mechanism the host uses to determine the current settings for a particular feature. This function shall return the current settings for the feature (including modifications that may have been previously made with the Set Features function). Parameters are always transferred on the lower 8-bits of the data bus. After reading the first byte of data, the host shall complete reading all desired data before issuing another command (including Read Status or Read Status Enhanced). Figure 67 defines the Get Features behavior and timings.

When issuing Get Features in the source synchronous data interface, each data byte is received twice. The host shall only latch one copy of each data byte. See section 4.3.2.4.

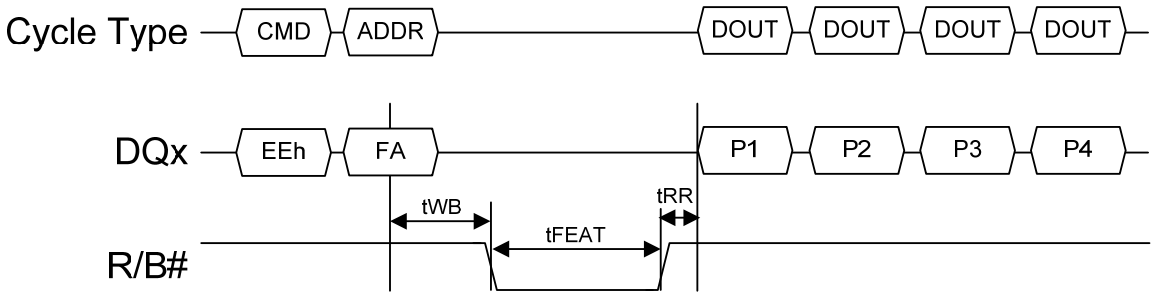

Figure 67 Get Features timing

FA Feature address identifying feature to return parameters for.

P1-P4 Current settings/parameters for the feature identified by argument P1

P1 Sub feature parameter 1 setting
P2 Sub feature parameter 2 setting
P3 Sub feature parameter 3 setting
P4 Sub feature parameter 4 setting

Refer to section 5.22 for the definition of features and sub feature parameters.

5.22. Feature Parameter Definitions

If the Set Features and Get Features commands are not supported by the Target, then no feature parameters are supported. Additionally, the Target only supports feature parameters defined in ONFI specification revisions that the Target complies with.

Feature settings are volatile across power cycles. For each feature setting, whether the value across resets is retained is explicitly stated.

Feature Address	Description
00h	Reserved
01h	Timing Mode
02h-0Fh	Reserved
10h	I/O Drive Strength
11h-1Fh	Reserved for programmable I/O settings
20h-5Fh	Reserved
60h-7Fh	Reserved for Block Abstracted NAND

80h-FFh	Vendor specific

5.22.1. Timing Mode

This setting shall be supported if the Target complies with ONFI specification revision 1.0.

The Data Interface setting is not retained across Reset (FFh); after a Reset (FFh) the Data Interface shall be asynchronous. All other settings for the timing mode are retained across Reset (FFh) and Synchronous Reset (FCh) commands. Note that if the Data Interface was changed due to a Reset (FFh), then the host should use Timing Mode 0 since modes do not correspond between data interface types and the device may report Timing Mode 0 as the selected timing mode. Hosts shall only set a timing mode that is explicitly shown as supported in the Read Parameter Page.

The results of the host using Set Features to transition from the source synchronous data interface to the asynchronous data interface is indeterminate. To transition to the asynchronous data interface, the host should use the Reset (FFh) command.

Sub Feature Parameter	**7**	**6**	**5**	**4**	**3**	**2**	**1**	**0**
P1	Reserved (0)		Data Interface		Timing Mode Number			
P2	Reserved (0)							
P3	Reserved (0)							
P4	Reserved (0)							

Timing Mode Number — Set to the numerical value of the maximum timing mode in use by the host. Default power-on value is 0h.

Data Interface — 00b = asynchronous (default power-on value)
01b = source synchronous
10-11b = Reserved

Reserved — Reserved values shall be cleared to zero by the host. Targets shall not be sensitive to the value of reserved fields.

5.22.2. I/O Drive Strength

This setting shall be supported if the Target supports the source synchronous data interface. The I/O drive strength setting shall be retained across Reset (FFh) and Synchronous Reset (FCh) commands. The power-on default drive strength value is the Nominal (10b) setting.

Sub Feature Parameter	**7**	**6**	**5**	**4**	**3**	**2**	**1**	**0**
P1	Reserved (0)						Drive Strength	
P2	Reserved (0)							
P3	Reserved (0)							
P4	Reserved (0)							

Drive strength — 00b = Overdrive 2
01b = Overdrive 1
10b = Nominal (power-on default)
11b = Underdrive

Reserved	Reserved values shall be cleared to zero by the host. Targets shall not be sensitive to the value of reserved fields.

6. Interleaved Operations

A LUN may support interleaved program and erase operations. Interleaved operations are when multiple commands of the same type are issued to different blocks on the same LUN. Refer to section 5.6.1.26 for addressing restrictions with interleaved operations. There are two methods for interleaved operations: concurrent and overlapped.

When performing interleaved operations, the operations/functions shall be the same type. The functions that may be used in interleaved operations are:

- Page Program
- Copyback Program
- Block Erase

There are no interleaved read operations. The Read Cache (Sequential or Random) command should be used to enhance read performance.

6.1. Requirements

When supported, the interleaved address comprises the lowest order bits of the block address as shown in Figure 18. The LUN and page addresses are required to be the same. The block address (other than the interleaved address bits) may be required to be the same, refer to section 5.6.1.26.

For copyback program operations, the restrictions are the same as for an interleaved program operation. However, copyback reads shall be previously issues to the same interleaved addresses as those in the interleaved copyback program operations. Note that for copyback reads, the reads may have different page addresses since the copyback reads are not interleaved.

Interleaved operations enable operations of the same type to be issued to other blocks on the same LUN. There are two methods for interleaved operations: concurrent and overlapped. The concurrent interleaved address operation waits until all command, address, and data are entered before accessing the Flash array. The overlapped interleaved operation begins its operation immediately after the command, address and data are entered and performs it in the background while the next interleaved command, address, and data are entered.

The interleaved address component of each address shall be distinct. A single interleaved (cached) program operation is shown in Figure 68. Between “Interleave Op 1” and “Interleave Op n”, all interleaved addresses shall be different from each other. After the 10h or 15h (cached) command cycle is issued, previously issued interleaved addresses can be used in future interleaved operations.

Figure 68 Interleaved Program (Cache)

For interleaved erase operations, the interleaved address component of each address shall be distinct. A single interleaved erase operation is shown in Figure 69. Between “Interleave Op 1” and “Interleave Op n”, all interleaved addresses shall be different from each other. After the D0h

command cycle is issued, previously issued interleaved addresses can be used in future interleaved operations.

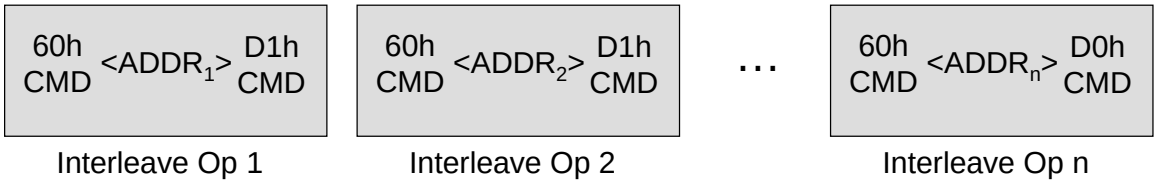

Figure 69 Interleaved Erase

6.2. Status Register Behavior

Some status register bits are independent per interleaved address. Other status register bits are shared across the entire LUN. This section defines when status register bits are independent per interleaved address. This is the same for concurrent and overlapped operations.

For interleaved operations, the FAIL bits are independent per interleaved address. Table 41 lists whether a bit is independent per interleaved address or shared across the entire LUN for interleaved operations.

Value	**7**	**6**	**5**	**4**	**3**	**2**	**1**	**0**
Status Register	WP#	RDY	ARDY	VSP	R	R	FAILC	FAIL
Independent	N	N	N	N	N	N	Y	Y

Table 41 Independent Status Register bits

6.3. Interleaved Page Program

The Page Program command transfers a page or portion of a page of data identified by a column address to the page register. The contents of the page register are then programmed into the Flash array at the row address indicated. With an interleaved operation, multiple programs can be issued back to back to the LUN, with a shorter busy time between issuance of the next program operation. Figure 70 defines the behavior and timings for two interleaved page program commands.

Cache operations may be used when doing interleaved page program operations, as shown, if supported by the target as indicated in the parameter page. Refer to section 5.6.1.25.

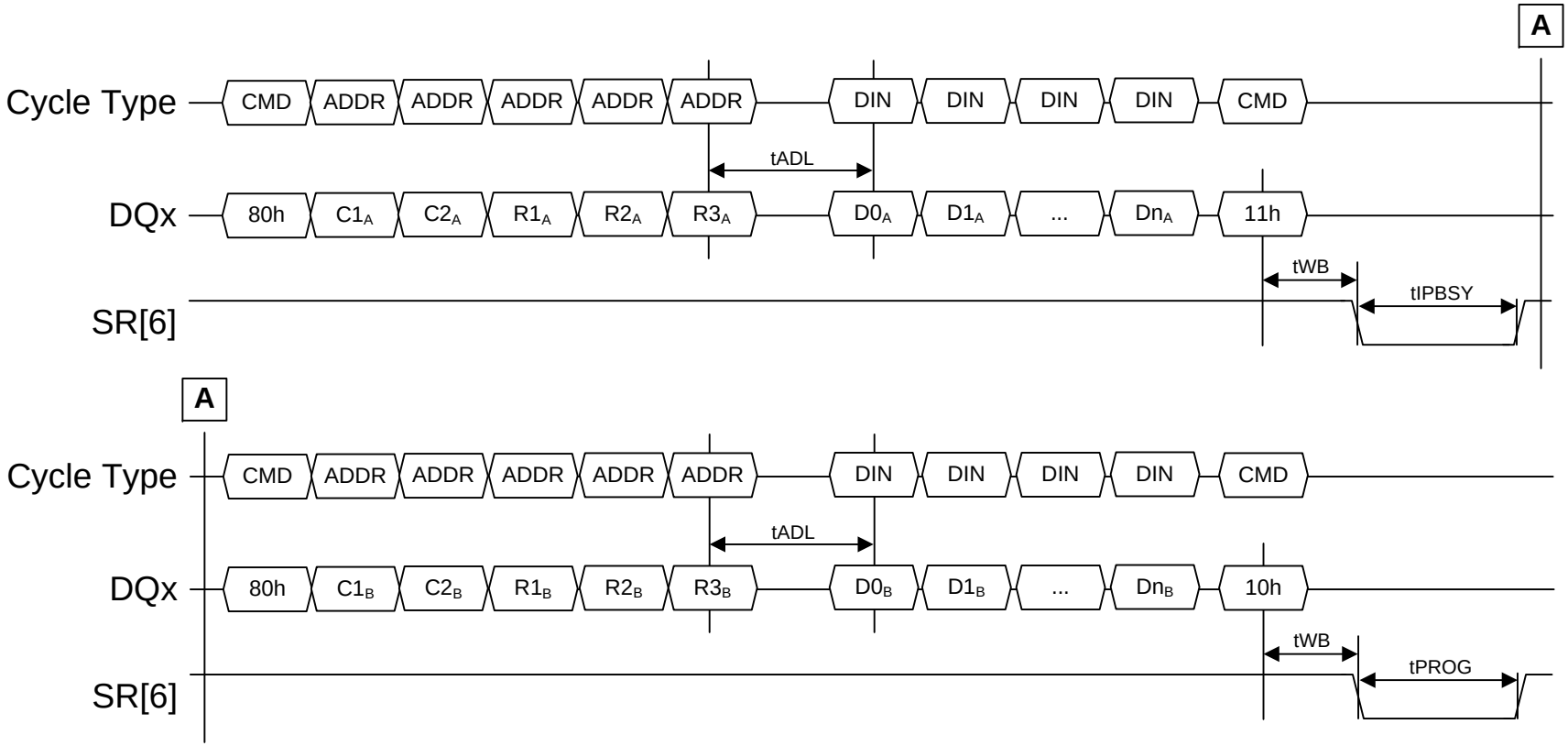

Figure 70 Interleaved Page Program timing

$C1_A$-$C2_A$	Column address for page A. $C1_A$ is the least significant byte.
$R1_A$-$R3_A$	Row address for page A. $R1_A$ is the least significant byte.
$D0_A$-Dn_A	Data to program for page A.
$C1_B$-$C2_B$	Column address for page B. $C1_B$ is the least significant byte.

$R1_B$-$R3_B$ Row address for page B. $R1_B$ is the least significant byte.

$D0_B$-Dn_B Data to program for page B.

The row addresses for page A and B shall differ in the interleaved address bits.

Finishing an interleaved program with a command cycle of 15h rather than 10h indicates that this is a cache operation. The host shall only issue a command cycle of 15h to complete an interleaved program operation if program cache is supported with interleaved program operations, as described in section 5.6.1.25.

6.4. Interleaved Copyback Program

The Copyback function reads a page of data from one location and then moves that data to a second location. With an interleaved operation, the Copyback Program function can be issued back to back to the target, with a shorter busy time between issuance of the next Copyback Program. Figure 71 and Figure 72 define the behavior and timings for two Copyback Program operations, including the preceding Copyback Read operations.

The interleaved addresses used for the Copyback Read operations shall be the same as the interleaved addresses used in the subsequent interleaved Copyback Program operations.

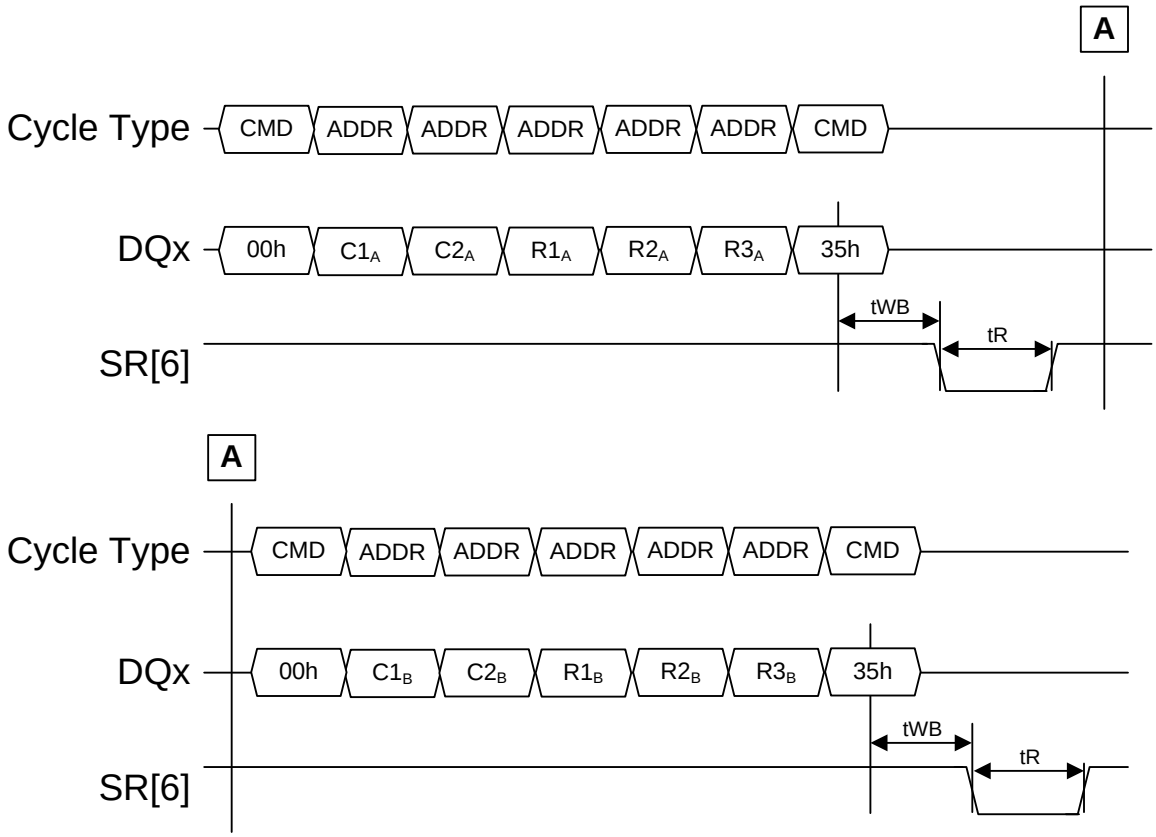

Figure 71 Copyback Read timing for Interleaved Copyback Program

$C1_A$-$C2_A$	Column address for source page A. $C1_A$ is the least significant byte.
$R1_A$-$R3_A$	Row address for source page A. $R1_A$ is the least significant byte.
$C1_B$-$C2_B$	Column address for source page B. $C1_B$ is the least significant byte.
$R1_B$-$R3_B$	Row address for source page B. $R1_B$ is the least significant byte.

The row addresses for all source pages shall differ in their interleaved address bits.

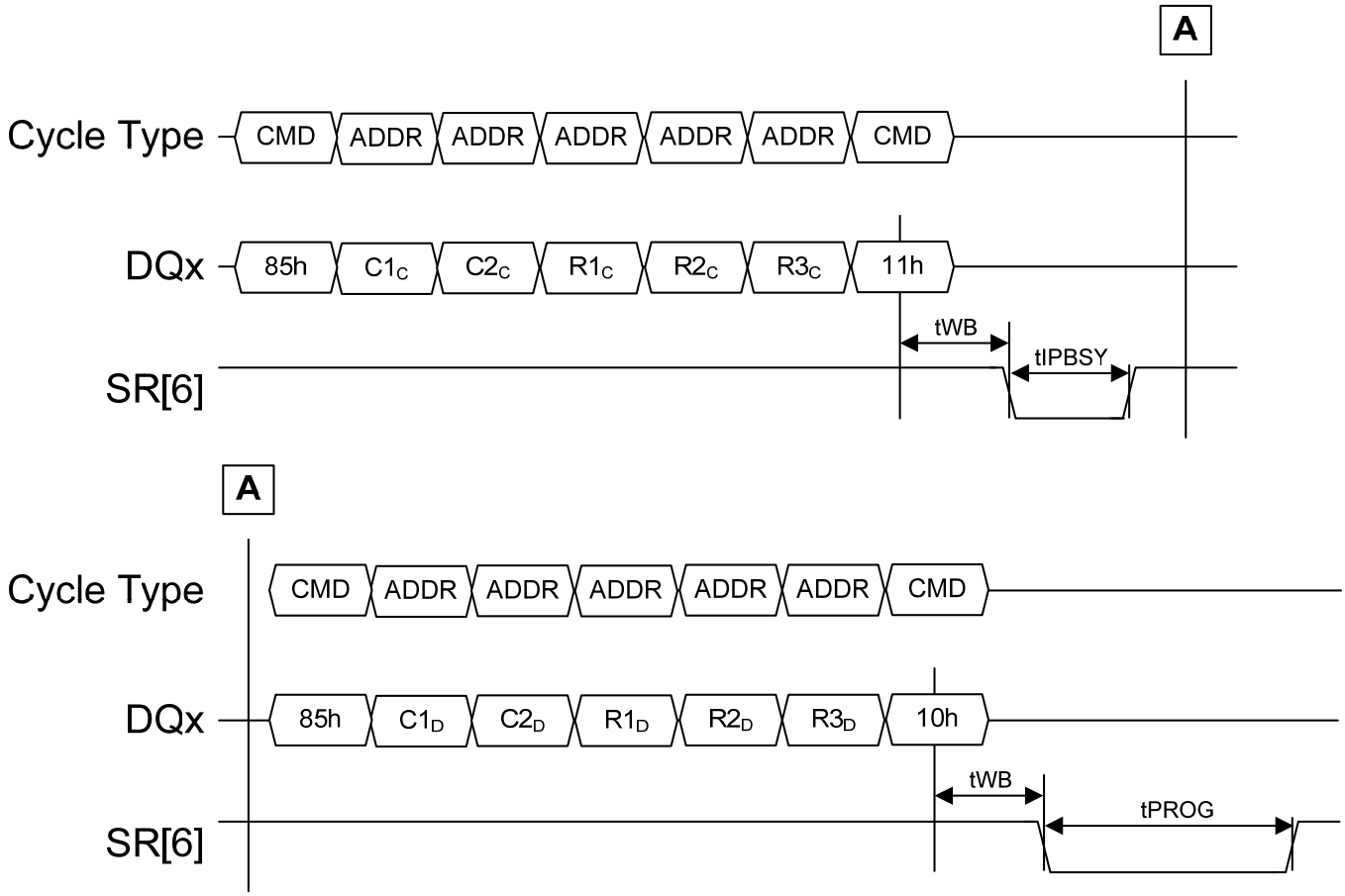

Figure 72 Interleaved Copyback Program

$C1_C$-$C2_C$	Column address for destination page C. $C1_C$ is the least significant byte.
$R1_C$-$R3_C$	Row address for destination page C. $R1_C$ is the least significant byte.
$C1_D$-$C2_D$	Column address for destination page D. $C1_D$ is the least significant byte.
$R1_D$-$R3_D$	Row address for destination page D. $R1_D$ is the least significant byte.

The row addresses for all destination pages shall differ in their interleaved address bits. The page address for all destination addresses for interleaved copyback operations shall be identical.

6.5. Interleaved Block Erase

Figure 73 defines the behavior and timings for an interleaved block erase operation. Only two operations are shown, however additional erase operations may be issued with a 60h/D1h sequence prior to the final 60h/D0h sequence depending on how many interleaved operations the LUN supports.

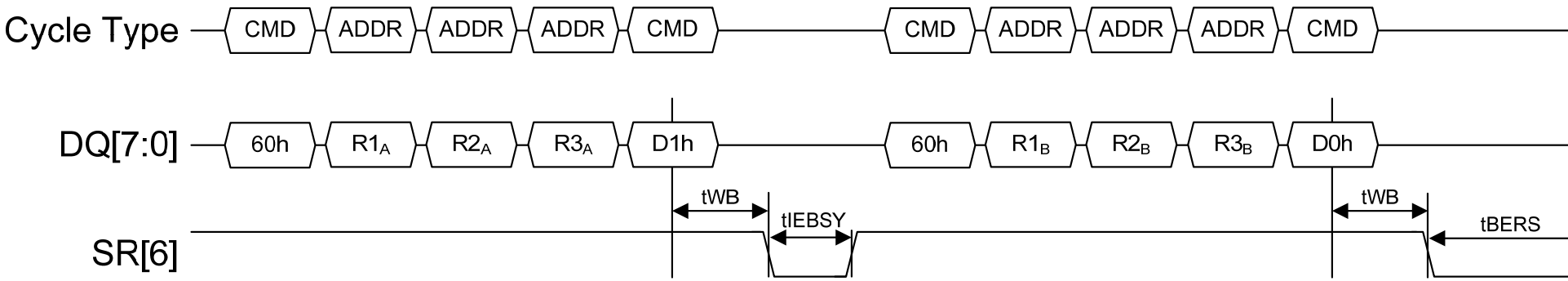

Figure 73 Interleaved Block Erase timing

$R1_A$-$R3_A$ Row address for erase block A. $R1_A$ is the least significant byte.

$R1_B$-$R3_B$ Row address for erase block B. $R1_B$ is the least significant byte.

7. Behavioral Flows

7.1. Target behavioral flows

The Target state machine describes the allowed sequences when operating with the target. If none of the arcs are true, then the target remains in the current state.

7.1.1. Variables

This section describes variables used within the Target state machine.

tbStatusOut	This variable is set to TRUE when a data read cycle should return the status value. The power-on value for this variable is FALSE.
tbChgCol	This variable is set to TRUE when changing the column is allowed. The power-on value for this variable is FALSE.
tCopyback	This variable is set to TRUE if the Target is issuing a copyback command. The power-on value for this variable is FALSE.
tLunSelected	This variable contains the LUN that is currently selected by the host. The power-on value for this variable is 0.
tLastCmd	This variable contains the first cycle of the last command (other than 70h/78h) received by the Target.
tReturnState	This variable contains the state to return to after status operations.
tbStatus78hReq	This variable is set to TRUE when the next status operation shall be a 78h command (and not a 70h command). The power-on value for this variable is FALSE.

7.1.2. Idle states

T_PowerOn[1]	The target performs the following actions: 1. R/B# is cleared to zero. 2. Each LUN shall draw less than 10 mA of power per staggered power-up requirement.		
	1. Target is ready to accept FFh (Reset) command[2]	→	T_PowerOnReady
	NOTE: 1. This state is entered as a result of a power-on event when Vcc reaches Vcc_min. 2. This arc shall be taken within 1 millisecond of Vcc reaching Vcc_min.		

T_PowerOnReady	The target performs the following actions: 1. R/B# is set to one. 2. Each LUN shall draw less than 10mA of power per staggered power-up requirement.		
	1. Command cycle FFh (Reset) received	→	T_RST_PowerOn

T_Idle	tCopyback set to FALSE. tReturnState set to T_Idle.		
	1. WP# signal transitioned	→	T_Idle_WP_Transition
	2. LUN indicates its SR[6] value transitioned	→	T_Idle_RB_Transition
	3. Command cycle received	→	T_Cmd_Decode

T_Cmd_Decode[1]	Decode command received. tbStatusOut is set to FALSE. If R/B# is set to one and command received is not 70h (Read Status), then tbStatus78hReq is set to FALSE.		
	1. (Command 80h (Page Program) or command 60h (Block Erase) decoded) and WP# is low	→	T_Idle
	2. Command FFh (Reset) decoded	→	T_RST_Execute
	3. Command FCh (Synchronous Reset) decoded	→	T_RST_Execute_Sync
	4. Command 90h (Read ID) decoded	→	T_RID_Execute
	5. Command ECh (Read Parameter Page) decoded	→	T_RPP_Execute
	6. Command EDh (Read Unique ID) decoded	→	T_RU_Execute
	7. Command 80h (Page Program) decoded and WP# is high	→	T_PP_Execute
	8. Command 60h (Block Erase) decoded and WP# is high	→	T_BE_Execute
	9. Command 00h (Read) decoded	→	T_RD_Execute
	10. Command EFh (Set Features) decoded	→	T_SF_Execute
	11. Command EEh (Get Features) decoded	→	T_GF_Execute
	12. Command 70h (Read Status) decoded	→	T_RS_Execute
	13. Command 78h (Read Status Enhanced) decoded	→	T_RSE_Execute
	NOTE: 1. The host shall ensure R/B# is set to one before issuing Target level commands (Reset, Read ID, Read Parameter Page, Read Unique ID, Set Features, Get Features).		

T_Idle_WP_Transition	Indicate WP# value to all LUN state machines.		
	1. State entered from T_Idle_Rd	→	T_Idle_Rd
	2. Else	→	T_Idle

T_Idle_RB_Transition	R/B# is set to the AND of all LUN status register SR[6] values.[1]		
	1. Unconditional	→	tReturnState
	NOTE: 1. R/B# may transition to a new value prior to the Target re-entering an idle condition when LUN level commands are in the process of being issued.		

7.1.3. Idle Read states

T_Idle_Rd	Wait for read request (data or status) or other action. tReturnState set to T_Idle_Rd.		
	1. WP# signal transitioned	→	T_Idle_WP_Transition
	2. LUN indicates its SR[6] value transitioned	→	T_Idle_RB_Transition
	3. Read request received and tbStatusOut set to TRUE	→	T_Idle_Rd_Status
	4. Read request received and (tLastCmd set to 90h or EEh)	→	T_Idle_Rd_XferByte
	5. Read request received and (tLastCmd set to ECh or EDh)	→	T_Idle_Rd_LunByte
	6. Read request received and tbStatus78hReq set to FALSE[1]	→	T_Idle_Rd_LunData
	7. Command cycle 05h (Change Read Column) received and tbChgCol set to TRUE	→	T_CR_Execute
	8. Command cycle of 31h received and tbStatus78hReq set to FALSE	→	T_Idle_Rd_CacheCmd
	9. Command cycle of 3Fh received and tLastCmd set to 31h and tbStatus78hReq set to FALSE	→	T_Idle_Rd_CacheCmd
	10. Command cycle received	→	T_Cmd_Decode
	NOTE: 1. When tbStatus78hReq is set to TRUE, a Read Status Enhanced (78h) command followed by a 00h command shall be issued by the host prior to reading data from a particular LUN.		

T_Idle_Rd_CacheCmd	Set tLastCmd to the command received. Pass command received to LUN tLunSelected		
	1. Unconditional	→	T_Idle_Rd

T_Idle_Rd_XferByte	Return next byte of data.		
	1. Unconditional	→	T_Idle_Rd

T_Idle_Rd_LunByte	Request byte of data from page register of LUN tLunSelected.		
	1. Byte received from LUN tLunSelected	→	T_Idle_Rd_XferHost

T_Idle_Rd_LunData	Request byte (x8) or word (x16) of data from page register of LUN tLunSelected.		
	1. Byte or word received from LUN tLunSelected	→	T_Idle_Rd_XferHost

T_Idle_Rd_XferHost	Transfer data byte or word received from LUN tLunSelected to host.		
	1. tReturnState set to T_RD_StatusOff and tCopyback set to TRUE	→	T_RD_Copyback
	2. tReturnState set to T_RD_StatusOff	→	T_Idle_Rd
	3. Else	→	tReturnState

T_Idle_Rd_Status	Request status from LUN tLunSelected.		
	1. Status from LUN tLunSelected received	→	T_Idle_Rd_StatusEnd

T_Idle_Rd_StatusEnd	Transfer status byte received from LUN tLunSelected to host.		
	1. Unconditional	→	tReturnState

T_CR_Execute	Wait for a column address cycle.		
	1. Column address cycle received	→	T_CR_Addr

T_CR_Addr	Store the column address cycle received.		
	1. More column address cycles required	→	T_CR_Execute
	2. All column address cycles received	→	T_CR_WaitForCmd

T_CR_WaitForCmd	Wait for a command cycle.		
	1. Command cycle E0h received	→	T_CR_ReturnToData

T_CR_ReturnToData	Request that LUN tLunSelected select the column in the page register based on the column address received.		
	1. tReturnState set to T_RD_Status_Off	→	T_Idle_Rd
	2. Else	→	tReturnState

7.1.4. Reset command states

T_RST_PowerOn	The target performs the following actions: 1. tLastCmd set to FFh. 2. tbStatusOut is set to FALSE. 3. The target sends a Reset request to each LUN.		
	1. Unconditional	→	T_RST_PowerOn_Exec

T_RST_PowerOn_Exec	The target performs the following actions: 1. Target level reset actions are performed. 2. R/B# is set to zero.		
1. Target and LUN reset actions are complete		→	T_RST_End

T_RST_Execute[1]	The target performs the following actions: 1. tLastCmd set to FFh. 2. The target selects the asynchronous data interface. 3. The target sends a Reset request to each LUN. 4. Set tbChgCol to FALSE. 5. Request all LUNs invalidate page register(s).		
1. Unconditional		→	T_RST_Perform
NOTE: 1. This state is entered as a result of receiving a Reset (FFh) command in any other state, except if this is the first Reset after power-on.			

T_RST_Execute_Sync[1]	The target performs the following actions: 1. tLastCmd set to FCh. 2. tbStatusOut is set to FALSE. 3. The target sends a Reset request to each LUN. 4. Set tbChgCol to FALSE. 5. Request all LUNs invalidate page register(s).		
1. Unconditional		→	T_RST_Perform
NOTE: 1. This state is entered as a result of receiving a Synchronous Reset (FCh) command in any other state.			

T_RST_Perform	The target performs the following actions: 1. Target level reset actions are performed. 2. R/B# is set to zero. 3. tReturnState set to T_RST_Perform.		
1. Target and LUN reset actions are complete		→	T_RST_End
2. Command cycle 70h (Read Status) received		→	T_RS_Execute
3. Read request received and tbStatusOut is set to TRUE		→	T_Idle_Rd_Status

T_RST_End	The target performs the following actions: 1. R/B# is set to one.		
1. tbStatusOut is set to FALSE		→	T_Idle
2. tbStatusOut is set to TRUE		→	T_Idle_Rd

7.1.5. Read ID command states

T_RID_Execute	The target performs the following actions: 1. tLastCmd set to 90h. 2. Wait for an address cycle. 3. Set tbChgCol to FALSE. 4. Request all LUNs invalidate page register(s).		
	1. Address cycle of 00h received	→	T_RID_Addr_00h
	2. Address cycle of 20h received	→	T_RID_Addr_20h

T_RID_Addr_00h	Wait for the read request.		
	1. Read byte request received	→	T_RID_ManufacturerID
	2. Command cycle received	→	T_Cmd_Decode

T_RID_ManufacturerID	Return the JEDEC manufacturer ID.		
	1. Read byte request received	→	T_RID_DeviceID
	2. Command cycle received	→	T_Cmd_Decode

T_RID_DeviceID	Return the device ID.[1]		
	1. Unconditional	→	T_Idle_Rd
	NOTE: 1. Reading bytes beyond the device ID returns vendor specific values.		

T_RID_Addr_20h	Wait for the read request.		
	1. Read byte request received	→	T_RID_Signature
	2. Command cycle received	→	T_Cmd_Decode

T_RID_Signature	Return next ONFI signature byte.[1]		
	1. Last ONFI signature byte returned	→	T_Idle_Rd
	2. Else	→	T_RID_Addr_20h
	NOTE: 1. Reading beyond the fourth byte returns indeterminate values.		

7.1.6. Read Parameter Page command states

T_RPP_Execute	The target performs the following actions: 1. tLastCmd set to ECh. 2. Set tbChgCol to TRUE. 3. Wait for an address cycle. 4. Request all LUNs invalidate page register(s). 5. Target selects LUN to execute parameter page read, sets tLunSelected to the address of this LUN.		
	1. Address cycle of 00h received	→	T_RPP_ReadParams

T_RPP_ReadParams	The target performs the following actions: 1. Request LUN tLunSelected clear SR[6] to zero. 2. R/B# is cleared to zero. 3. Request LUN tLunSelected make parameter page data available in page register. 4. tReturnState set to T_RPP_ReadParams.		
	1. Read of page complete	→	T_RPP_Complete
	2. Command cycle 70h (Read Status) received	→	T_RS_Execute
	3. Read request received and tbStatusOut set to TRUE	→	T_Idle_Rd_Status

T_RPP_Complete	Request LUN tLunSelected set SR[6] to one. R/B# is set to one.		
1. Unconditional		→	T_Idle_Rd

7.1.7. Read Unique ID command states

T_RU_Execute	The target performs the following actions: 1. tLastCmd set to EDh. 2. Set tbChgCol to TRUE. 3. Request all LUNs invalidate page register(s). 4. Wait for an address cycle. 5. Target selects LUN to execute unique ID read, sets tLunSelected to the address of this LUN.		
1. Address cycle of 00h received		→	T_RU_ReadUid

T_RU_ReadUid	The target performs the following actions: 1. Request LUN tLunSelected clear SR[6] to zero. 2. R/B# is cleared to zero. 3. Request LUN tLunSelected make Unique ID data available in page register. 4. tReturnState set to T_RU_ReadUid.		
1. LUN tLunSelected indicates data available in page register		→	T_RU_Complete
2. Command cycle 70h (Read Status) received		→	T_RS_Execute
3. Read request received and tbStatusOut set to TRUE		→	T_Idle_Rd_Status

T_RU_Complete	Request LUN tLunSelected set SR[6] to one. R/B# is set to one.		
1. Unconditional		→	T_Idle_Rd

7.1.8. Page Program and Page Cache Program command states

T_PP_Execute	The target performs the following actions: 1. tLastCmd set to 80h. 2. If R/B# is cleared to zero, then tbStatus78hReq is set to TRUE. 3. Request all LUNs clear their page register(s).[1]		
1. Unconditional		→	T_PP_AddrWait
NOTE: 1. Idle LUNs may choose to not clear their page register if the Program is not addressed to that LUN.			

T_PP_Copyback	If R/B# is cleared to zero, then tbStatus78hReq is set to TRUE.		
1. Unconditional		→	T_PP_AddrWait

T_PP_AddrWait	Wait for an address cycle.		
	1. Address cycle received	→	T_PP_Addr

T_PP_Addr	Store the address cycle received.		
	1. More address cycles required	→	T_PP_AddrWait
	2. All address cycles received	→	T_PP_LUN_Execute

T_PP_LUN_Execute	tLunSelected is set to the LUN indicated by the row address received. Target issues the Program with associated address to the LUN tLunSelected.		
	1. Unconditional	→	T_PP_LUN_DataWait

T_PP_LUN_DataWait	Wait for data byte/word or command cycle to be received from the host.		
	1. Data byte/word received from the host	→	T_PP_LUN_DataPass
	2. Command cycle of 15h received and tCopyback set to FALSE	→	T_PP_Cmd_Pass
	3. Command cycle of 10h or 11h received	→	T_PP_Cmd_Pass
	4. Command cycle of 85h received	→	T_PP_ColChg

T_PP_LUN_DataPass	Pass data byte/word received from host to LUN tLunSelected		
	1. Unconditional	→	T_PP_LUN_DataWait

T_PP_Cmd_Pass	Pass command received to LUN tLunSelected		
	1. Command passed was 11h	→	T_PP_IlvWait
	2. Command passed was 10h or 15h	→	T_Idle

T_PP_IlvWait	Wait for next Program to be issued. tReturnState set to T_PP_IlvWait.		
	1. Command cycle of 85h received[1] and tCopyback set to TRUE	→	T_PP_AddrWait
	2. Command cycle of 80h received[1] and tCopyback set to FALSE	→	T_PP_AddrWait
	3. Command cycle of 70h received	→	T_RS_Execute
	4. Command cycle of 78h received	→	T_RSE_Execute
	5. Read request received and tbStatusOut set to TRUE	→	T_Idle_Rd_Status
	NOTE: 1. Address cycles for the Program operation being issued shall have the same LUN address and page address as the preceding Program operation. The interleaved address shall be different than the one issued in the preceding Program operation.		

T_PP_ColChg	Wait for column address cycle.		
	1. Address cycle received	→	T_PP_ColChg_Addr

T_PP_ColChg_Addr	Store the address cycle received.		
	1. More column address cycles required	→	T_PP_ColChg
	2. All address cycles received	→	T_PP_ColChg_LUN

T_PP_ColChg_LUN	Request that LUN tLunSelected change column address to column address received.		
	1. Unconditional	→	T_PP_LUN_DataWait

7.1.9. Block Erase command states

T_BE_Execute	The target performs the following actions: 1. tLastCmd set to 60h. 2. If R/B# is cleared to zero, then tbStatus78hReq is set to TRUE. 3. Wait for a row address cycle.		
	1. Address cycle received	→	T_BE_Addr

T_BE_Addr	Store the row address cycle received.		
	1. More address cycles required	→	T_BE_Execute
	2. All address cycles received	→	T_BE_LUN_Execute

T_BE_LUN_Execute	tLunSelected is set to the LUN indicated by the row address received. Target issues the Erase with associated row address to the LUN tLunSelected.		
	1. Unconditional	→	T_BE_LUN_Confirm

T_BE_LUN_Confirm	Wait for D0h or D1h command cycle.		
	1. Command cycle of D0h or D1h received	→	T_BE_Cmd_Pass

T_BE_Cmd_Pass	Pass command received to LUN tLunSelected		
	1. Command passed was D1h	→	T_BE_IlvWait
	2. Command passed was D0h	→	T_Idle

T_BE_IlvWait	Wait for next Erase to be issued. tReturnState set to T_BE_IlvWait.		
	1. Command cycle of 60h received	→	T_BE_Execute
	2. Command cycle of 70h received	→	T_RS_Execute
	3. Command cycle of 78h received	→	T_RSE_Execute
	4. Read request received and tbStatusOut set to TRUE	→	T_Idle_Rd_Status

7.1.10. Read command states

T_RD_Execute			
	1. tbStatusOut set to TRUE	→	T_RD_StatusOff
	2. Else	→	T_RD_AddrWait

T_RD_StatusOff	tbStatusOut set to FALSE. tReturnState set to T_RD_StatusOff.		
	1. Address cycle received	→	T_RD_Addr
	2. Read request received and tLastCmd set to EEh	→	T_Idle_Rd_XferHost
	3. Read request received	→	T_Idle_Rd_LunData
	4. Command cycle of 05h received	→	T_CR_Execute

T_RD_AddrWait	tLastCmd set to 00h. Set tbChgCol to TRUE. If R/B# is cleared to zero, then tbStatus78hReq is set to TRUE. Wait for an address cycle.		
	1. Address cycle received	→	T_RD_Addr

T_RD_Addr	Store the address cycle received.		
	1. More address cycles required	→	T_RD_AddrWait
	2. All address cycles received	→	T_RD_LUN_Execute

T_RD_LUN_Execute	The target performs the following actions: 1. tLunSelected is set to the LUN indicated by the row address received. 2. Issues the Read Page with address to LUN tLunSelected. 3. Requests all idle LUNs not selected to turn off their output buffers.[1]		
	1. Unconditional	→	T_RD_LUN_Confirm
	NOTE: 1. LUNs not selected will only turn off their output buffers if they are in an Idle state. If other LUNs are active, the host shall issue a Read Status Enhanced (78h) command to ensure all LUNs that are not selected turn off their output buffers prior to issuing the Read (00h) command.		

T_RD_LUN_Confirm	Wait for 30h, 31h, or 35h to be received.		
	1. Command cycle of 30h, 31h, or 35h received	→	T_RD_Cmd_Pass

T_RD_Cmd_Pass	Pass command received to LUN tLunSelected		
	1. Command passed was 35h	→	T_RD_Copyback
	2. Command passed was 30h or 31h	→	T_Idle_Rd

T_RD_Copyback	tCopyback set to TRUE. tReturnState set to T_RD_Copyback.		
	1. Command cycle of 00h received	→	T_RD_Execute
	2. Command cycle of 05h received	→	T_CR_Execute
	3. Command cycle of 85h received	→	T_PP_Copyback
	4. Command cycle of 70h received	→	T_RS_Execute
	5. Command cycle of 78h received	→	T_RSE_Execute
	6. LUN indicates its SR[6] value transitions	→	T_Idle_RB_Transition
	7. Read request received and tbStatusOut set to TRUE	→	T_Idle_Rd_Status
	8. Read request received	→	T_Idle_Rd_LunData

7.1.11. Set Features command states

T_SF_Execute	The target performs the following actions: 1. tLastCmd set to EFh. 2. Request all LUNs invalidate page register(s). 3. Wait for an address cycle.		
	1. Address cycle received	→	T_SF_Addr

T_SF_Addr	Store the feature address received.		
	1. Unconditional	→	T_SF_WaitForParams

T_SF_WaitForParams	Wait for data byte to be received.		
	1. Data byte written to target	→	T_SF_StoreParam

T_SF_StoreParam	Store parameter received.		
	1. More parameters required	→	T_SF_WaitForParams
	2. All parameters received	→	T_SF_Complete

T_SF_Complete	The target performs the following actions: 1. Request LUN tLunSelected clear SR[6] to zero. 2. R/B# is cleared to zero. 3. Finish Set Features command. 4. tReturnState set to T_SF_Complete.		
	1. Set Features command complete	→	T_SF_UpdateStatus
	2. Command cycle 70h (Read Status) received	→	T_RS_Execute
	3. Read request received and tbStatusOut set to TRUE	→	T_Idle_Rd_Status

T_SF_UpdateStatus	The target performs the following actions: 1. Request LUN tLunSelected set SR[6] to one. 2. R/B# is set to one.		
	1. tbStatusOut is set to FALSE	→	T_Idle
	2. tbStatusOut is set to TRUE	→	T_Idle_Rd

7.1.12. Get Features command states

T_GF_Execute	The target performs the following actions: 1. tLastCmd set to EEh. 2. Request all LUNs invalidate page register(s). 3. Set tbChgCol to FALSE. 4. Wait for an address cycle.		
	1. Address cycle received	→	T_GF_Addr

T_GF_Addr	Store the feature address received.		
	1. Unconditional	→	T_GF_RetrieveParams

T_GF_RetrieveParams	The target performs the following actions: 1. Request LUN tLunSelected clear SR[6] to zero. 2. R/B# is cleared to zero. 3. Retrieve parameters. 4. tReturnState set to T_GF_RetrieveParams.		
	1. Parameters are ready to be transferred to the host	→	T_GF_Ready
	2. Command cycle 70h (Read Status) received	→	T_RS_Execute
	3. Read request received and tbStatusOut set to TRUE	→	T_Idle_Rd_Status

T_GF_Ready	Request LUN tLunSelected set SR[6] to one. R/B# is set to one.		
	1. Unconditional	→	T_Idle_Rd

7.1.13. Read Status command states

T_RS_Execute			
	1. tbStatus78hReq is set to FALSE[1]	→	T_RS_Perform
	NOTE: 1. When tbStatus78hReq is set to TRUE, issuing a Read Status (70h) command is illegal.		

T_RS_Perform	The target performs the following actions: 1. tbStatusOut is set to TRUE. 2. Indicate 70h command received to LUN tLunSelected.		
	1. tReturnState set to T_Idle	→	T_Idle_Rd
	2. Else	→	tReturnState

7.1.14. Read Status Enhanced command states

T_RSE_Execute[1]	tbStatus78hReq is set to FALSE. tbStatusOut is set to TRUE. Wait for a row address cycle.		
	1. Row address cycle received	→	T_RSE_Addr
	NOTE: 1. The host should not issue Read Status Enhanced following a Target level command (Reset, Read ID, Read Parameter Page, Read Unique ID, Set Features, Get Features). The status value read from the LUN selected with Read Status Enhanced may not correspond with the LUN selected during the Target level command.		

T_RSE_Addr	Store the row address cycle received.		
	1. More row address cycles required	→	T_RSE_Execute
	2. All row address cycles received	→	T_RSE_Select

T_RSE_Select	The target performs the following actions: 1. Set tLunSelected to LUN selected by row address received. 2. Indicate 78h command and row address received to all LUNs.		
	1. tReturnState set to T_Idle	→	T_Idle_Rd
	2. Else	→	tReturnState

7.2. LUN behavioral flows

The LUN state machine describes the allowed sequences when operating with the LUN. If none of the arcs are true, then the LUN remains in the current state.

7.2.1. Variables

This section describes variables used within the LUN state machine.

lunStatus This variable contains the current LUN status register value contents. The power on value for this variable is 00h.

lunFail[] This array contains the FAIL and FAILC bits for each interleave address. For example, lunFail[3][1] contains the FAILC bit for interleaved address 3. The power on value for each variable in this array is 00b.

lunLastConfirm This variable contains the last confirm command cycle (30h, 31h, 35h, 10h, 15h, 11h, D0h, D1h). The power on value for this variable is FFh.

lunReturnState This variable contains the state to return to after status operations. The power on value for this variable is L_Idle.

lunStatusCmd This variable contains the last status command received. The power on value for this variable is 70h.

lunStatusIlv This variable contains the interleaved address indicated in a previous 78h command. The power on value for this variable is 0h.

lunbInterleave This variable is set to one when the LUN is performing an interleaved operation. The power on value for this variable is FALSE.

lunbIlvNextCmd This variable is set to TRUE when the LUN is ready to receive the next interleaved command.

7.2.2. Idle command states

L_Idle[1]	lunStatus[6] is set to one. lunStatus[6] value is indicated to the Target. lunReturnState is set to L_Idle.		
	1. Target request received	→	L_Idle_TargetRequest
	NOTE: 1. This state is entered as a result of a power-on event when Vcc reaches Vcc_min.		

L_Idle_TargetRequest	If Target indicates an address, the address is stored by the LUN.		
	1. Target requests LUN perform a Reset	→	L_RST_Execute
	2. Target indicates WP# value	→	L_WP_Update
	3. Target requests SR register update	→	L_SR_Update
	4. Target requests status or status command received	→	L_Status_Execute
	5. Target indicates output buffer should be turned off	→	L_Idle
	6. Target requests page register clear	→	L_Idle_ClearPageReg
	7. Target requests page register invalidate	→	L_Idle_InvalidPageReg
	8. Target indicates Program request for this LUN	→	L_PP_Execute
	9. Target indicates Erase request for this LUN	→	L_BE_Execute
	10. Target indicates Read Page request for this LUN	→	L_RD_Addr
	11. Target indicates Read Parameter Page request	→	L_Idle_RdPp
	12. Target indicates Read Unique ID request	→	L_Idle_RdUid

L_WP_Update	Set lunStatus[7] to the WP# value indicated by the target.		
	1. Unconditional	→	lunReturnState

L_SR_Update	Update lunStatus as indicated by the target.		
	1. Unconditional	→	lunReturnState

L_Idle_ClearPageReg	Set page register to all ones value.		
	1. Unconditional	→	lunReturnState

L_Idle_InvalidPageReg	Invalidate page register.		
	1. Unconditional	→	lunReturnState

L_Idle_RdPp	The LUN performs the following actions: 1. LUN reads parameter page data into the page register. 2. lunReturnState set to L_Idle_RdPp.		
	1. Parameter page data transferred to page register	→	L_Idle_RdPp_End
	2. Target requests status or status command received	→	L_Status_Execute

L_Idle_RdPp_End	LUN indicates to Target that parameter page data is in page register.		
	1. Unconditional	→	L_Idle_Rd

L_Idle_RdUid	The LUN performs the following actions: 1. LUN reads Unique ID data into the page register. 2. lunReturnState set to L_Idle_RdUid.		
1. Unique ID data transferred to page register		→	L_Idle_RdUid_End
2. Target requests status or status command received		→	L_Status_Execute

L_Idle_RdUid_End	LUN indicates to Target that Unique ID data is in page register.		
1. Unconditional		→	L_Idle_Rd

7.2.3. Idle Read states

L_Idle_Rd	lunStatus[6] is set to one. lunStatus[6] value is indicated to the Target. lunReturnState is set to L_Idle_Rd.		
1. Background read operation complete		→	L_Idle_Rd_Finish
2. Target requests column address be selected		→	L_Idle_Rd_ColSelect
3. Read request received from Target		→	L_Idle_Rd_Xfer
4. Command cycle 31h (Read Cache Sequential) received		→	L_RD_Cache_Next
5. Command cycle 3Fh (Read Cache End) received and lunLastConfirm is 31h		→	L_RD_Cache_Xfer_End
6. Target request received		→	L_Idle_TargetRequest

L_Idle_Rd_Finish	Set lunStatus[5] to one.		
1. Unconditional		→	L_Idle_Rd

L_Idle_Rd_Xfer	Return to the Target the next byte (x8) or word (x16) of data from page register based on Target requested. Increments column address.		
1. Unconditional		→	L_Idle_Rd

L_Idle_Rd_ColSelect	Select the column in the page register based on the column address received from the target.		
1. Unconditional		→	L_Idle_Rd

7.2.4. Status states

L_Status_Execute			
1. Target requests status value		→	L_Status_Value
2. Target indicates 78h was received		→	L_Status_Enhanced
3. Target indicates 70h was received		→	L_Status_Legacy

L_Status_Value			
	1. lunbInterleave set to TRUE and lunStatusCmd set to 70h	→	L_Status_Ilv_Comp
	2. lunbInterleave set to TRUE and lunStatusCmd set to 78h	→	L_Status_Ilv_Addr
	3. lunbInterleave set to FALSE	→	L_Status_Lun

L_Status_Enhanced			
	1. LUN in row address indicated matches this LUN	→	L_Status_Record_78h
	2. Else	→	L_Status_Output_Off

L_Status_Record_78h	lunStatusCmd is set to 78h and lunStatusIlv is set to interleaved address indicated by Target. The LUN turns on its output buffer.		
	1. Unconditional	→	lunReturnState

L_Status_Output_Off	LUN turns off its output buffer.		
	1. lunReturnState set to L_Idle_Rd	→	L_Idle
	2. Else	→	lunReturnState

L_Status_Legacy	lunStatusCmd is set to 70h.		
	1. Unconditional	→	lunReturnState

L_Status_Ilv_Comp	The LUN composes the status value to return as shown: • status[7:2] = lunStatus[7:2] • status[1] = for all x, OR of lunFail[x][1] • status[0] = for all x, OR of lunFail[x][0] Return status to the Target.		
	1. Unconditional	→	lunReturnState

L_Status_Ilv_Addr	The LUN composes the status value to return as shown: • status[7:2] = lunStatus[7:2] • status[1:0] = lunFail[lunStatusIlv][1:0] Return status to the Target.		
	1. Unconditional	→	lunReturnState

L_Status_Lun	Return lunStatus to the Target.		
	1. Unconditional	→	lunReturnState

7.2.5. Reset states

L_RST_Execute[1]	The LUN performs the following actions: 1. lunStatus[6] is cleared to zero. 2. lunStatus[6] value is indicated to the Target. 3. Perform reset of the LUN. 4. lunbInterleave is set to FALSE. 5. lunReturnState is set to L_RST_Execute.		
	1. Reset of the LUN is complete	→	L_RST_Complete
	2. Target requests status or status command received	→	L_Status_Execute
	NOTE: 1. This state is entered as a result of receiving an indication from the Target state machine to perform a Reset in any other state.		

L_RST_Complete	The LUN performs the following actions: 1. lunStatus[1:0] are cleared to 00b. 2. For all interleaved addresses x, clear lunFail[x][1:0] to 00b. 3. lunStatus[6] is set to one. 4. lunStatus[6] value is indicated to the Target. 5. Indicate to the Target state machine that Reset for this LUN is complete.		
	1. Unconditional	→	L_Idle

7.2.6. Block Erase command states

L_BE_Execute	lunbInterleave set to FALSE.		
	1. Unconditional	→	L_BE_WaitForCmd

L_BE_WaitForCmd	Wait for a command cycle.		
	1. Command cycle D0h received	→	L_BE_Erase
	2. Command cycle D1h received	→	L_BE_Ilv

L_BE_Erase	The LUN performs the following actions: 1. lunStatus[6] is cleared to zero. 2. If lunbInterleave is TRUE, lunStatus[5] is cleared to zero. 3. lunStatus[6] value is indicated to the Target. 4. lunLastConfirm set to D0h. 5. Erase the requested block and any previously requested blocks if lunbInterleave is set to TRUE and concurrent interleaving is supported.		
	1. Unconditional	→	L_BE_Erase_Wait

L_BE_Erase_Wait	lunReturnState set to L_BE_Erase_Wait.		
	1. Erase of requested block(s) complete and lunbInterleave set to TRUE	→	L_BE_Ilv_Sts
	2. Erase of requested block complete	→	L_BE_Sts
	3. Target requests page register clear	→	L_Idle_ClearPageReg
	4. Target requests status or status command received	→	L_Status_Execute

L_BE_Ilv	The LUN performs the following actions in the order specified: 1. lunbInterleave set to TRUE. 2. lunLastConfirm set to D1h. 3. lunStatus[6:5] is cleared to 00b. lunStatus[6] value is indicated to the Target. 4. LUN begins erasing block specified if overlapped is supported. 5. lunbIlvNextCmd is set to FALSE. 6. LUN prepares to receive the next block to erase.		
	1. Unconditional	→	L_BE_Ilv_Wait

L_BE_Ilv_Wait	lunReturnState set to L_BE_Ilv_Wait.		
	1. An overlapped interleaved Erase completed	→	L_BE_Ilv_Overlap
	2. Ready to receive the next Erase command and lunbIlvNextCmd is set to FALSE	→	L_BE_Ilv_NextCmd
	3. Target indicates Erase request for this LUN and lunbIlvNextCmd is set to TRUE	→	L_BE_WaitForCmd
	4. Target requests status or status command received	→	L_Status_Execute

L_BE_Ilv_NextCmd	The LUN performs the following actions in the order specified: 1. lunbIlvNextCmd is set to TRUE. 2. If no array operations are in progress, lunStatus[5] is set to one. 3. lunStatus[6] is set to one. lunStatus[6] value is indicated to the Target.		
	1. Unconditional	→	L_BE_Ilv_Wait

L_BE_Ilv_Overlap	The LUN performs the following actions in the order specified for the overlapped interleaved operation that completed: 1. ilvComplete set to interleave address of completed operation 2. lunFail[ilvComplete][0] is set to program status of operation. If all array operations are complete, lunStatus[5] is set to one.		
	1. Unconditional	→	lunReturnState

L_BE_Sts	The LUN performs the following actions in the order specified: 1. lunStatus[0] is set to erase status. 2. lunStatus[6] is set to one. lunStatus[6] value is indicated to the Target.		
1. Unconditional		→	L_Idle

L_BE_Ilv_Sts	The LUN performs the following actions in the order specified for each interleaved operation that completed: 1. ilvComplete set to interleave address of completed operation. 2. lunFail[ilvComplete][0] is set to erase status value. lunStatus[6:5] is set to 11b and lunStatus[6] value is indicated to the Target.		
1. Unconditional		→	L_Idle

7.2.7. Read command states

If caching is not supported, then all actions for status bit 5 are ignored.

L_RD_Addr	The LUN performs the following actions in the order specified: 1. Records address received from the Target. 2. If interleaved addressing is supported, selects the correct page register based on the interleaved address. 3. Selects the column in the page register based on the column address received.		
2. Unconditional		→	L_RD_WaitForCmd

L_RD_WaitForCmd	lunbInterleave set to FALSE. Wait for a command cycle.		
1. Command cycle 30h or 35h received		→	L_RD_ArrayRead
2. Command cycle 31h received and lunLastConfirm equal to 30h or 31h		→	L_RD_Cache_Xfer

L_RD_ArrayRead	The LUN performs the following actions: 1. lunStatus[6:5] is cleared to 00b. 2. lunStatus[6] value is indicated to the Target. 3. lunLastConfirm set to last command cycle (30h or 35h). 4. Read the requested page from the array. 5. lunReturnState set to L_RD_ArrayRead.		
1. Read of requested page complete		→	L_RD_Complete
2. Target requests status or status command received		→	L_Status_Execute

L_RD_Complete	lunStatus[6:5] is set to 11b. lunStatus[6] value is indicated to the Target.		
1. Unconditional		→	L_Idle_Rd

L_RD_Cache_Next	Select the next row address as the sequential increasing row address

	to the last page read.		
1. Unconditional		→	L_RD_Cache_Xfer

L_RD_Cache_Xfer	The LUN performs the following actions: 1. lunStatus[6:5] is cleared to 00b. lunStatus[6] value is indicated to the Target. 2. lunLastConfirm set to 31h. 3. Begin background read operation for selected address. 4. lunReturnState set to L_RD_Cache_Xfer.		
1. Data available in page register for previous read operation		→	L_RD_Cache_Sts
2. Target requests status or status command received		→	L_Status_Execute

L_RD_Cache_Xfer_End	The LUN performs the following actions: 1. lunStatus[6] is cleared to zero. 2. lunStatus[6] value is indicated to the Target. 3. lunLastConfirm set to 3Fh. 4. lunReturnState set to L_RD_Cache_Xfer_End.		
1. Data available in page register for previous read operation		→	L_RD_Cache_Sts_End
2. Target requests status or status command received		→	L_Status_Execute

L_RD_Cache_Sts	lunStatus[6] is set to one. lunStatus[6] value is indicated to the Target.		
1. Unconditional		→	L_Idle_Rd

L_RD_Cache_Sts_End	lunStatus[6:5] is set to 11b. lunStatus[6] value is indicated to the Target.		
1. Unconditional		→	L_Idle_Rd

7.2.8. Page Program and Page Cache Program command states

If caching or overlapped interleaving is not supported, then all actions for status bit 5 are ignored.
If caching is not supported, then all actions for status bit 1 are ignored.

L_PP_Execute	lunbInterleave set to FALSE.		
1. Unconditional		→	L_PP_Addr

L_PP_Addr	The LUN performs the following actions in the order specified: 1. Records address received from the Target. 2. If interleaved addressing is supported, selects the correct page register based on the interleaved address. 3. Selects the column in the page register based on the column address received.		
1. Unconditional		→	L_PP_WaitForData

L_PP_WaitForData	Wait for data to be received. lunReturnState is set to L_PP_WaitForData.		
	1. Target passes data byte or word to LUN	→	L_PP_AcceptData
	2. Command cycle 10h (program execute) received	→	L_PP_Prog
	3. Command cycle 15h (cache program) received	→	L_PP_Cache
	4. Command cycle 11h (interleave) received	→	L_PP_Ilv
	5. Target requests column address be selected	→	L_PP_ColSelect

L_PP_AcceptData	Write the byte (x8) or word (x16) of data into the selected column address in the page register. Increments column address.		
	1. Unconditional	→	L_PP_WaitForData

L_PP_Prog	The LUN performs the following actions in the order specified: 1. lunStatus[6:5] is cleared to 00h. lunStatus[6] value is indicated to the Target. 2. lunLastConfirm set to 10h. 3. LUN begins programming page specified and any previous pages specified if lunbInterleave is TRUE and concurrent interleaving is supported.		
	1. Unconditional	→	L_PP_Prog_Wait

L_PP_Prog_Wait	lunReturnState set to L_PP_Prog_Wait.		
	1. Write of all requested pages are complete and lunbInterleave is set to TRUE	→	L_PP_Ilv_Sts
	2. Write of requested page is complete and lunbInterleave is cleared to FALSE	→	L_PP_Sts
	3. Target requests status or status command received	→	L_Status_Execute

L_PP_Cache	The LUN performs the following actions in the order specified: 1. lunStatus[6:5] is cleared to 00b. lunStatus[6] value is indicated to the Target. 2. lunLastConfirm set to 15h. 3. Wait for the page register to become available for data input. 4. Start background program operation.		
	1. Unconditional	→	L_PP_Cache_Wait

L_PP_Cache_Wait	lunReturnState is set to L_PP_Cache_Wait.		
	1. Page register available for data input	→	L_PP_CacheRdy
	2. Target requests status or status command received	→	L_Status_Execute

L_PP_CacheRdy	The LUN performs the following actions: 1. If lunbInterleave is set to FALSE, then lunStatus[1] is set to the value of lunStatus[0]. 2. If lunbInterleave is set to TRUE, then for all interleaved addresses, x, lunFail[x][1] is set to the value of lunFail[x][0].

	3. lunStatus[6] is set to one. lunStatus[6] value is indicated to the Target.		
1. Unconditional		→	L_PP_CacheRdy_Wait

L_PP_CacheRdy_Wait	lunReturnState set to L_PP_CacheRdy_Wait.		
1. Previous cache operation complete and lunbInterleave set to TRUE		→	L_PP_Ilv_Cache_Sts
2. Previous cache operation complete		→	L_PP_Cache_Sts
3. Target indicates Program request for this LUN		→	L_PP_Addr
4. Target requests page register clear		→	L_Idle_ClearPageReg
5. Target requests status or status command received		→	L_Status_Execute

L_PP_Ilv	The LUN performs the following actions in the order specified: 1. lunbInterleave set to TRUE. 2. lunStatus[6:5] is cleared to 00b. lunStatus[6] value is indicated to the Target. 3. lunLastConfirm set to 11h. 4. lunbIlvNextCmd is set to FALSE. 5. LUN begins programming page specified if overlapped interleaving is supported. 6. Prepare to receive next page to program.		
1. Unconditional		→	L_PP_Ilv_Wait

L_PP_Ilv_Wait	lunReturnState set to L_PP_Ilv_Wait.		
1. An overlapped interleaved Program completed		→	L_PP_Ilv_Overlap
2. A previous cache Program completed		→	L_PP_Ilv_Cache_Sts
3. Ready to receive the next Program command and lunbIlvNextCmd is set to FALSE		→	L_PP_Ilv_NextCmd
4. Target indicates Program request for this LUN and lunbIlvNextCmd is set to TRUE		→	L_PP_Addr
5. Target requests status or status command received		→	L_Status_Execute

L_PP_Ilv_NextCmd	The LUN performs the following actions in the order specified: 1. lunbIlvNextCmd is set to TRUE. 2. If no array operations are in progress, lunStatus[5] is set to one. 3. lunStatus[6] is set to one. lunStatus[6] value is indicated to the Target.		
1. Unconditional		→	L_PP_Ilv_Wait

L_PP_Sts	The LUN performs the following actions in the order specified: 1. lunStatus[1] is set to program status of previous operation 2. lunStatus[0] is set to program status of final operation 3. lunStatus[6:5] is set to 11b. 4. lunStatus[6] value is indicated to the Target.		
1. Unconditional		→	L_Idle

L_PP_Cache_Sts	The LUN performs the following actions in the order specified: 1. lunStatus[0] is set to program status. 2. lunStatus[5] is set to one.		
1. Unconditional		→	lunReturnState

L_PP_Ilv_Cache_Sts	The LUN performs the following actions in the order specified for all completed cache operations: 1. ilvAddr set to interleave address of cache operation. 2. lunFail[ilvAddr][0] is set to program status. If all array operations are complete, lunStatus[5] is set to one.		
1. Unconditional		→	lunReturnState

L_PP_Ilv_Overlap	The LUN performs the following actions in the order specified for the overlapped interleaved operation that completed: 1. ilvComplete set to interleave address of completed operation 2. lunFail[ilvComplete][0] is set to program status of operation. If all array operations are complete, lunStatus[5] is set to one.		
1. Unconditional		→	lunReturnState

L_PP_Ilv_Sts	The LUN performs the following actions in the order specified for each interleaved operation that completed: 1. ilvComplete set to interleave address of completed operation 2. lunFail[ilvComplete][1] is set to program status of previous operation. 3. lunFail[ilvComplete][0] is set to program status of final operation. lunStatus[6:5] is set to 11b and lunStatus[6] value is indicated to the Target.		
1. Unconditional		→	L_Idle

L_PP_ColSelect	Select the column in the page register based on the column address received that the target requested.		
1. Unconditional		→	L_PP_WaitForData

A. SAMPLE CODE FOR CRC-16 (INFORMATIVE)

This section provides an informative implementation of the CRC-16 polynomial. The example is intended as an aid in verifying an implementation of the algorithm.

```
int main(int argc, char* argv[])
{
      // Bit by bit algorithm without augmented zero bytes
      const unsigned long crcinit = 0x4F4E;     // Initial CRC value in the shift register
      const int order = 16;                     // Order of the CRC-16
      const unsigned long polynom = 0x8005;     // Polynomial
      unsigned long i, j, c, bit;
      unsigned long crc = crcinit;              // Initialize the shift register with 0x4F4E
      unsigned long data_in;
      int dataByteCount = 0;
      unsigned long crcmask, crchighbit;
      crcmask = ((((unsigned long)1<<(order-1))-1)<<1)|1;
      crchighbit = (unsigned long)1<<(order-1);

      // Input byte stream, one byte at a time, bits processed from MSB to LSB
      printf("Input byte value in hex(eg. 0x30):");
      printf("\n");
```

```
	while(scanf("%x", &data_in) == 1)
	{
		c = (unsigned long)data_in;
		dataByteCount++;
		for (j=0x80; j; j>>=1) {
			bit = crc & crchighbit;
			crc<<= 1;
			if (c & j) bit^= crchighbit;
			if (bit) crc^= polynom;
		}
		crc&= crcmask;
		printf("CRC-16 value:  0x%x\n", crc);
	}
	printf("Final CRC-16 value: 0x%x, total data bytes: %d\n", crc, dataByteCount);

	return 0;
}
```

B. SPARE SIZE RECOMMENDATIONS (INFORMATIVE)

This appendix describes recommendations for the spare bytes per page based on the ECC requirements reported in the parameter page. Table 42 lists recommendations for 2KB and 4KB page size devices.

Page Size	Number of bits ECC correctability	Spare Bytes Per Page Recommendation
2048 bytes	<= 8 bits	64 bytes
2048 bytes	> 8 bits	112 bytes
4096 bytes	<= 8 bits	128 bytes
4096 bytes	> 8 bits	218 or 224 bytes

Table 42 Spare Area Size Recommendations

For a 4KB page with more than 8 bits of ECC correctability required, a 224-byte spare area is recommended for devices that support the source synchronous data interface. This ensures that each partial page (including data and spare) is an even number of bytes.

For a 32Gb density die device, the recommended page size is 4KB.