Numonyx™ StrataFlash® Embedded Memory (P30)

Datasheet

Product Features

- High performance
  - 85 ns initial access
  - 52 MHz with zero wait states, 17ns clock-to-data output synchronous-burst read mode
  - 25 ns asynchronous-page read mode
  - 4-, 8-, 16-, and continuous-word burst mode
  - Buffered Enhanced Factory Programming (BEFP) at 5 µs/byte (Typ)
  - 1.8 V buffered programming at 7 µs/byte (Typ)
- Architecture
  - Multi-Level Cell Technology: Highest Density at Lowest Cost
  - Asymmetrically-blocked architecture
  - Four 32-KByte parameter blocks: top or bottom configuration
  - 128-KByte main blocks
- Voltage and Power
  - V_{CC} (core) voltage: 1.7 V – 2.0 V
  - V_{CCQ} (I/O) voltage: 1.7 V – 3.6 V
  - Standby current: 20µA (Typ) for 64-Mbit
  - 4-Word synchronous read current: 13 mA (Typ) at 40 MHz
- Quality and Reliability
  - Operating temperature: –40 °C to +85 °C
  - Minimum 100,000 erase cycles per block
  - ETOX™ VIII process technology
- Security
  - One-Time Programmable Registers:
    - 64 unique factory device identifier bits
    - 2112 user-programmable OTP bits
  - Selectable OTP Space in Main Array:
    - Four pre-defined 128-KByte blocks (top or bottom configuration)
    - Up to Full Array OTP Lockout
  - Absolute write protection: $V_{PP} = V_{SS}$
  - Power-transition erase/program lockout
  - Individual zero-latency block locking
  - Individual block lock-down
- Software
  - 20 µs (Typ) program suspend
  - 20 µs (Typ) erase suspend
  - Numonyx™ Flash Data Integrator optimized
  - Basic Command Set and Extended Command Set compatible
  - Common Flash Interface capable
- Density and Packaging
  - 56- Lead TSOP package (64, 128, 256, 512- Mbit)
  - 64- Ball Numonyx™ Easy BGA package (64, 128, 256, 512- Mbit)
  - Numonyx™ QUAD+ SCSP (64, 128, 256, 512- Mbit)
  - 16-bit wide data bus

306666-12
August 2008

INTEL-1023
9,135,190

INFORMATION IN THIS DOCUMENT IS PROVIDED IN CONNECTION WITH NUMONYX™ PRODUCTS. NO LICENSE, EXPRESS OR IMPLIED, BY ESTOPPEL OR OTHERWISE, TO ANY INTELLECTUAL PROPERTY RIGHTS IS GRANTED BY THIS DOCUMENT. EXCEPT AS PROVIDED IN NUMONYX'S TERMS AND CONDITIONS OF SALE FOR SUCH PRODUCTS, NUMONYX ASSUMES NO LIABILITY WHATSOEVER, AND NUMONYX DISCLAIMS ANY EXPRESS OR IMPLIED WARRANTY, RELATING TO SALE AND/OR USE OF NUMONYX PRODUCTS INCLUDING LIABILITY OR WARRANTIES RELATING TO FITNESS FOR A PARTICULAR PURPOSE, MERCHANTABILITY, OR INFRINGEMENT OF ANY PATENT, COPYRIGHT OR OTHER INTELLECTUAL PROPERTY RIGHT. Numonyx products are not intended for use in medical, life saving, life sustaining, critical control or safety systems, or in nuclear facility applications.

Numonyx B.V. may make changes to specifications and product descriptions at any time, without notice.

Numonyx B.V. may have patents or pending patent applications, trademarks, copyrights, or other intellectual property rights that relate to the presented subject matter. The furnishing of documents and other materials and information does not provide any license, express or implied, by estoppel or otherwise, to any such patents, trademarks, copyrights, or other intellectual property rights.

Designers must not rely on the absence or characteristics of any features or instructions marked "reserved" or "undefined." Numonyx reserves these for future definition and shall have no responsibility whatsoever for conflicts or incompatibilities arising from future changes to them.

Contact your local Numonyx sales office or your distributor to obtain the latest specifications and before placing your product order.

Copies of documents which have an order number and are referenced in this document, or other Numonyx literature may be obtained by visiting Numonyx's website at http://www.numonyx.com.

Numonyx, the Numonyx logo, and StrataFlash are trademarks or registered trademarks of Numonyx B.V. or its subsidiaries in other countries.

*Other names and brands may be claimed as the property of others.

Copyright © 2009, Numonyx, B.V., All Rights Reserved.

Contents

1.0 Functional Description 5
- 1.1 Introduction 5
- 1.2 Overview 5
- 1.3 Virtual Chip Enable Description 6
- 1.4 Memory Maps 6

2.0 Package Information 9
- 2.1 56-Lead TSOP 9
- 2.2 64-Ball Easy BGA Package 10
- 2.3 QUAD+ SCSP Packages 12

3.0 Ballouts 15

4.0 Signals 18
- 4.1 Dual-Die Configurations 20

5.0 Bus Operations 21
- 5.1 Reads 21
- 5.2 Writes 21
- 5.3 Output Disable 21
- 5.4 Standby 22
- 5.5 Reset 22

6.0 Command Set 23
- 6.1 Device Command Codes 23
- 6.2 Device Command Bus Cycles 24

7.0 Read Operation 26
- 7.1 Asynchronous Page-Mode Read 26
- 7.2 Synchronous Burst-Mode Read 26
- 7.3 Read Device Identifier 27
- 7.4 Read CFI 27

8.0 Program Operation 28
- 8.1 Word Programming 28
- 8.2 Factory Word Programming 29
- 8.3 Buffered Programming 29
- 8.4 Buffered Enhanced Factory Programming 30
  - 8.4.1 BEFP Requirements and Considerations 30
  - 8.4.2 BEFP Setup Phase 31
  - 8.4.3 BEFP Program/Verify Phase 31
  - 8.4.4 BEFP Exit Phase 32
- 8.5 Program Suspend 32
- 8.6 Program Resume 32
- 8.7 Program Protection 33

9.0 Erase Operations 34
- 9.1 Block Erase 34
- 9.2 Erase Suspend 34
- 9.3 Erase Resume 35
- 9.4 Erase Protection 35

10.0 Security Modes 36
- 10.1 Block Locking 36
  - 10.1.1 Lock Block 36
  - 10.1.2 Unlock Block 36

10.1.3 Lock-Down Block 36
10.1.4 Block Lock Status 37
10.1.5 Block Locking During Suspend 37
10.2 Selectable One-Time Programmable Blocks 38

11.0 Registers 39
11.1 Read Status Register 39
11.1.1 Clear Status Register 40
11.2 Read Configuration Register 40
11.2.1 Read Mode 41
11.2.2 Latency Count 41
11.2.3 WAIT Polarity 43
11.2.4 Data Hold 44
11.2.5 WAIT Delay 44
11.2.6 Burst Sequence 45
11.2.7 Clock Edge 45
11.2.8 Burst Wrap 46
11.2.9 Burst Length 46
11.2.10 End of Word Line (EOWL) Considerations 46
11.3 One-Time-Programmable (OTP) Registers 46
11.3.1 Reading the OTP registers 47
11.3.2 Programming the OTP Registers 48
11.3.3 Locking the OTP Registers 48

12.0 Power and Reset Specifications 49
12.1 Power-Up and Power-Down 49
12.2 Reset Specifications 49
12.3 Power Supply Decoupling 50

13.0 Maximum Ratings and Operating Conditions 51
13.1 Absolute Maximum Ratings 51
13.2 Operating Conditions 51

14.0 Electrical Specifications 52
14.1 DC Current Characteristics 52
14.2 DC Voltage Characteristics 53

15.0 AC Characteristics 54
15.1 AC Test Conditions 54
15.2 Capacitance 55
15.3 AC Read Specifications 55
15.4 AC Write Specifications 62

16.0 Program and Erase Characteristics 66

17.0 Ordering Information 67
17.1 Discrete Products 67
17.2 SCSP Products 68

A Supplemental Reference Information 69

B Conventions - Additional Information 94

C Revision History 96

1.0 Functional Description

1.1 Introduction

This document provides information about the Numonyx™ StrataFlash® Embedded Memory (P30) product and describes its features, operation, and specifications.

The Numonyx™ StrataFlash® Embedded Memory (P30) product is the latest generation of Numonyx™ StrataFlash® memory devices. Offered in 64-Mbit up through 512-Mbit densities, the P30 device brings reliable, two-bit-per-cell storage technology to the embedded flash market segment. Benefits include more density in less space, high-speed interface, lowest cost-per-bit NOR device, and support for code and data storage. Features include high-performance synchronous-burst read mode, fast asynchronous access times, low power, flexible security options, and three industry standard package choices. The P30 product family is manufactured using Intel* 130 nm ETOX™ VIII process technology.

The P30 product family is also planned on the Intel* 65nm process lithography. 65nm AC timing changes are noted in this datasheet, and should be taken into account for all new designs.

1.2 Overview

This section provides an overview of the features and capabilities of the P30.

The P30 family provides density upgrades from 64-Mbit through 512-Mbit. This family of devices provides high performance at low voltage on a 16-bit data bus. Individually erasable memory blocks are sized for optimum code and data storage.

Upon initial power up or return from reset, the device defaults to asynchronous page-mode read. Configuring the Read Configuration Register enables synchronous burst-mode reads. In synchronous burst mode, output data is synchronized with a user-supplied clock signal. A WAIT signal provides an easy CPU-to-flash memory synchronization.

In addition to the enhanced architecture and interface, the device incorporates technology that enables fast factory program and erase operations. Designed for low-voltage systems, the
P30 supports read operations with V_{CC} at 1.8 V, and erase and program operations with V_{PP} at 1.8 V or 9.0 V. Buffered Enhanced Factory Programming (BEFP) provides the fastest flash array programming performance with V_{PP} at 9.0 V, which increases factory throughput. With V_{PP} at 1.8 V, VCC and VPP can be tied together for a simple, ultra low power design. In addition to voltage flexibility, a dedicated VPP connection provides complete data protection when $V_{PP} \leq V_{PPLK}$.

A Command User Interface (CUI) is the interface between the system processor and all internal operations of the device. An internal Write State Machine (WSM) automatically executes the algorithms and timings necessary for block erase and program. A Status Register indicates erase or program completion and any errors that may have occurred.

An industry-standard command sequence invokes program and erase automation. Each erase operation erases one block. The Erase Suspend feature allows system software to pause an erase cycle to read or program data in another block. Program Suspend allows system software to pause programming to read other locations. Data is programmed in word increments (16 bits).

The P30 protection register allows unique flash device identification that can be used to increase system security. The individual Block Lock feature provides zero-latency block locking and unlocking. In addition, the P30 device also has four pre-defined spaces in the main array that can be configured as One-Time Programmable (OTP).

1.3 Virtual Chip Enable Description

The P30 512Mbit devices employ a Virtual Chip Enable which combines two 256-Mbit die with a common chip enable, F1-CE# for QUAD+ packages or CE# for Easy BGA and TSOP packages. (Refer to Figure 9 on page 21 and Figure 10 on page 21). Address A24 (Quad+ package) or A25 (Easy BGA and TSOP packages) is then used to select between the die pair with F1-CE# / CE# asserted depending upon the package option used. When chip enable is asserted and QUAD+ A24 (Easy BGA/TSOP A25) is low (V_{IL}), The lower parameter die is selected; when chip enable is asserted and QUAD+ A24 (Easy BGA/TSOP A25) is high (V_{IH}), the upper parameter die is selected. Refer to Table 1 and Table 2 for additional details.

Table 1: Virtual Chip Enable Truth Table for 512 Mb (QUAD+ Package)

Die Selected	F1-CE#	A24
Lower Param Die	L	L
Upper Param Die	L	H

Table 2: Virtual Chip Enable Truth Table for 512 Mb (Easy BGA & TSOP Packages)

Die Selected	CE#	A25
Lower Param Die	L	L
Upper Param Die	L	H

1.4 Memory Maps

Table 3 through Table 5 show the P30 memory maps. The memory array is divided into multiple 8-Mbit Programming Regions (see Section 8.0, “Program Operation” on page 29).

Table 3: Discrete Top Parameter Memory Maps (all packages)

	Size (KB)	Blk	64-Mbit
One Programming Region	32	66	3FC000 - 3FFFFF
	⋮	⋮	⋮
	32	63	3F0000 - 3F3FFF
	128	62	3E0000 - 3EFFFF
	⋮	⋮	⋮
	128	56	380000 - 38FFFF
Seven Programming Regions	128	55	370000 - 37FFFF
	128	54	360000 - 36FFFF
	⋮	⋮	⋮
	128	1	010000 - 01FFFF
	128	0	000000 - 00FFFF

	Size (KB)	Blk	128-Mbit
One Programming Region	32	130	7FC000 - 7FFFFF
	⋮	⋮	⋮
	32	127	7F0000 - 7F3FFF
	128	126	7E0000 - 7EFFFF
	⋮	⋮	⋮
	128	120	780000 - 78FFFF
Fifteen Programming Regions	128	119	770000 - 77FFFF
	128	118	760000 - 76FFFF
	⋮	⋮	⋮
	128	1	010000 - 01FFFF
	128	0	000000 - 00FFFF

	Size (KB)	Blk	256-Mbit
One Programming Region	32	258	FFC000 - FFFFFF
	⋮	⋮	⋮
	32	255	FF0000 - FF3FFF
	128	254	FE0000 - FEFFFF
	⋮	⋮	⋮
	128	248	F80000 - F8FFFF
Thirty-One Programming Regions	128	247	F70000 - F7FFFF
	128	246	F60000 - F6FFFF
	⋮	⋮	⋮
	128	1	010000 - 01FFFF
	128	0	000000 - 00FFFF

Table 4: Discrete Bottom Parameter Memory Maps (all packages)

	Size (KB)	Blk	64-Mbit
Seven Programming Regions	128	66	3F0000 - 3FFFFF
	128	65	3E0000 - 3EFFFF
	⋮	⋮	⋮
	128	12	090000 - 09FFFF
	128	11	080000 - 08FFFF
One Programming Region	128	10	070000 - 07FFFF
	⋮	⋮	⋮
	128	4	010000 - 01FFFF
	32	3	00C000 - 00FFFF
	⋮	⋮	⋮
	32	0	000000 - 003FFF

	Size (KB)	Blk	128-Mbit
Fifteen Programming Regions	128	130	7F0000 - 7FFFFF
	128	129	7E0000 - 7EFFFF
	⋮	⋮	⋮
	128	12	090000 - 09FFFF
	128	11	080000 - 08FFFF
One Programming Region	128	10	070000 - 07FFFF
	⋮	⋮	⋮
	128	4	010000 - 01FFFF
	32	3	00C000 - 00FFFF
	⋮	⋮	⋮
	32	0	000000 - 003FFF

	Size (KB)	Blk	256-Mbit
Thirty-One Programming Regions	128	258	FF0000 - FFFFFF
	128	257	FE0000 - FEFFFF
	⋮	⋮	⋮
	128	12	090000 - 09FFFF
	128	11	080000 - 08FFFF
One Programming Region	128	10	070000 - 07FFFF
	⋮	⋮	⋮
	128	4	010000 - 01FFFF
	32	3	00C000 - 00FFFF
	⋮	⋮	⋮
	32	0	000000 - 003FFF

Block size is referenced in K-Bytes where a byte=8 bits. Block Address range is referenced in K-Words where a Word is the size of the flash output bus (16 bits).

Note: The Dual- Die P30 memory maps are the same for both parameter options because the devices employ virtual chip enable (Refer to Section 1.3). The parameter option only defines the placement of bottom parameter die.

Table 5: 512-Mbit Top and Bottom Parameter Memory Map (Easy BGA and QUAD+ SCSP)

512-Mbit Flash (2x256-Mbit w/ 1CE)			
Die Stack Config	**Size (KB)**	**Blk**	**Address Range**
256-Mbit Top Parameter Die	32	517	1FFC000 - 1FFFFFF
	⋮	⋮	⋮
	32	514	1FF0000 - 1FF3FFF
	128	513	1FE0000 - 1FEFFFF
	⋮	⋮	⋮
	128	259	1000000 - 100FFFF
	128	258	FF0000 - FFFFFF
256-Mbit Bottom Parameter Die	⋮	⋮	⋮
	128	4	010000 - 01FFFF
	32	3	00C000 - 00FFFF
	⋮	⋮	⋮
	32	0	000000 - 003FFF

Note: Refer to the appropriate 256-Mbit Memory Map (Table 3 or Table 4) for Programming Region information; Block size is referenced in K-Bytes where a byte=8 bits. Block Address range is referenced in K-Words where a Word is the size of the flash output bus (16 bits).

2.0 Package Information

2.1 56-Lead TSOP

Figure 1: TSOP Mechanical Specifications

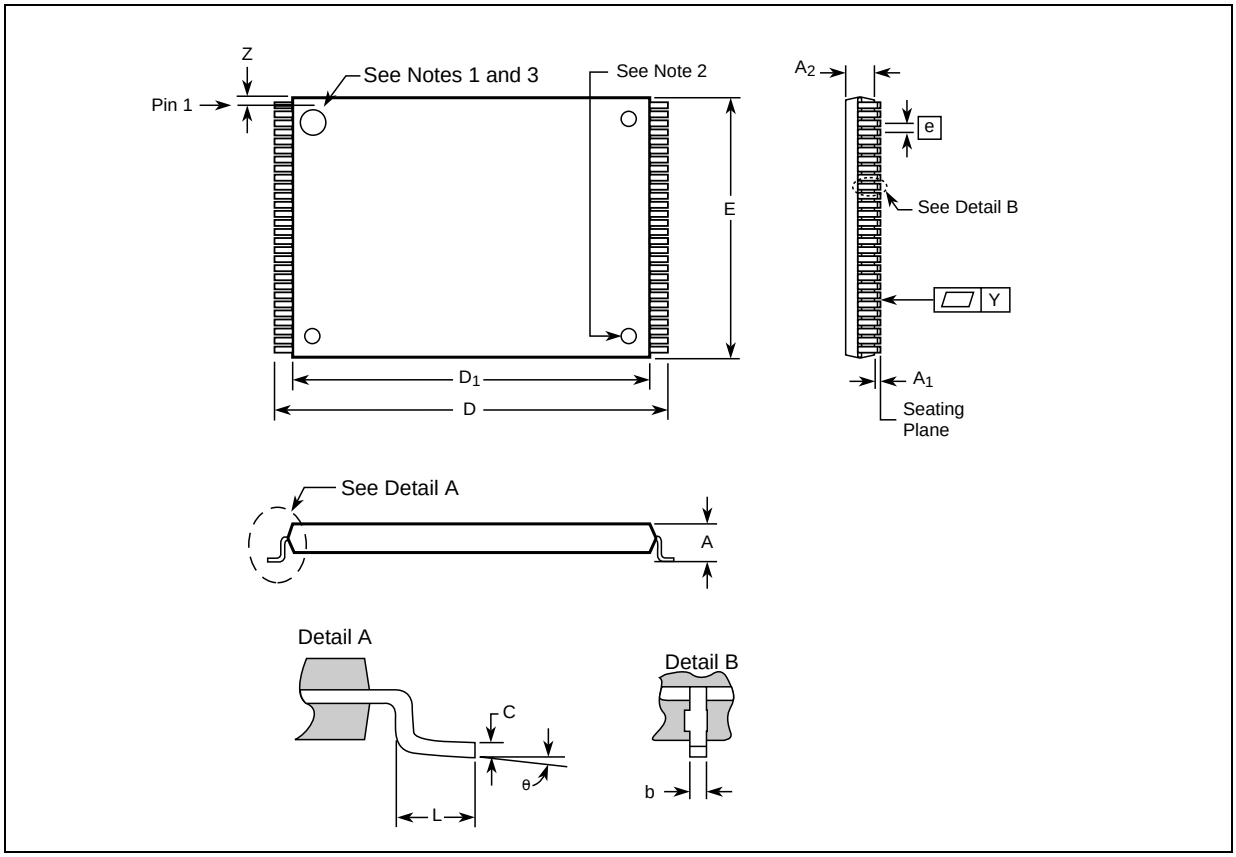

Table 6: TSOP Package Dimensions (Sheet 1 of 2)

Product Information	Symbol	Millimeters			Inches			Notes
		Min	Nom	Max	Min	Nom	Max	
Package Height	A	-	-	1.200	-	-	0.047	
Standoff	A_1	0.050	-	-	0.002	-	-	
Package Body Thickness	A_2	0.965	0.995	1.025	0.038	0.039	0.040	
Lead Width	b	0.100	0.150	0.200	0.004	0.006	0.008	
Lead Thickness	c	0.100	0.150	0.200	0.004	0.006	0.008	
Package Body Length	D_1	18.200	18.400	18.600	0.717	0.724	0.732	
Package Body Width	E	13.800	14.000	14.200	0.543	0.551	0.559	
Lead Pitch	e	-	0.500	-	-	0.0197	-	
Terminal Dimension	D	19.800	20.00	20.200	0.780	0.787	0.795	

Table 6: TSOP Package Dimensions (Sheet 2 of 2)

Product Information	Symbol	Millimeters			Inches			Notes
		Min	Nom	Max	Min	Nom	Max	
Lead Tip Length	L	0.500	0.600	0.700	0.020	0.024	0.028	
Lead Count	N	-	56	-	-	56	-	
Lead Tip Angle	ý	0°	3°	5°	0°	3°	5°	
Seating Plane Coplanarity	Y	-	-	0.100	-	-	0.004	
Lead to Package Offset	Z	0.150	0.250	0.350	0.006	0.010	0.014	

Notes:
1. One dimple on package denotes Pin 1.
2. If two dimples, then the larger dimple denotes Pin 1.
3. Pin 1 will always be in the upper left corner of the package, in reference to the product mark.
4. Daisy Chain Evaluation Unit information is at Numonyx™ Flash Memory Packaging Technology http://developer.Numonyx.com/design/flash/packtech.

2.2 64-Ball Easy BGA Package

Figure 2: Easy BGA Mechanical Specifications

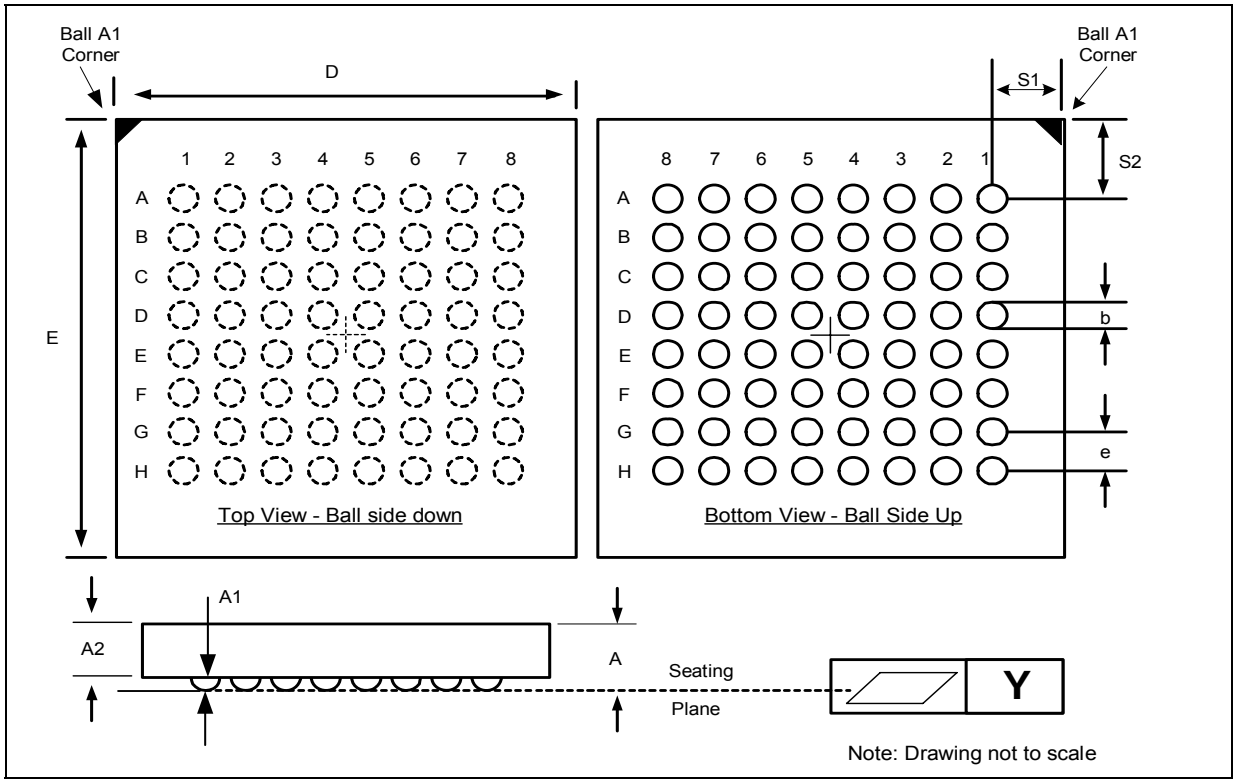

Table 7: Easy BGA Package Dimensions

Product Information	Symbol	Millimeters			Inches			Notes
		Min	Nom	Max	Min	Nom	Max	
Package Height (64/128/256-Mbit)	A	-	-	1.200	-	-	0.0472	
Package Height (512-Mbit)	A	-	-	1.300	-	-	0.0512	
Ball Height	A1	0.250	-	-	0.0098	-	-	
Package Body Thickness (64/128/256-Mbit)	A2	-	0.780	-	-	0.0307	-	
Package Body Thickness (512-Mbit)	A2	-	0.910	-	-	0.0358	-	
Ball (Lead) Width	b	0.330	0.430	0.530	0.0130	0.0169	0.0209	
Package Body Width	D	9.900	10.000	10.100	0.3898	0.3937	0.3976	
Package Body Length	E	12.900	13.000	13.100	0.5079	0.5118	0.5157	
Pitch	[e]	-	1.000	-	-	0.0394	-	
Ball (Lead) Count	N	-	64	-	-	64	-	
Seating Plane Coplanarity	Y	-	-	0.100	-	-	0.0039	
Corner to Ball A1 Distance Along D	S1	1.400	1.500	1.600	0.0551	0.0591	0.0630	
Corner to Ball A1 Distance Along E	S2	2.900	3.000	3.100	0.1142	0.1181	0.1220	

Notes:

1. Daisy Chain Evaluation Unit information is at Numonyx™ Flash Memory Packaging Technology http://developer.Numonyx.com/design/flash/packtech.

2.3 QUAD+ SCSP Packages

Figure 3: 64/128-Mbit, 88-ball (80 active) QUAD+ SCSP Specifications (8x10x1.2 mm)

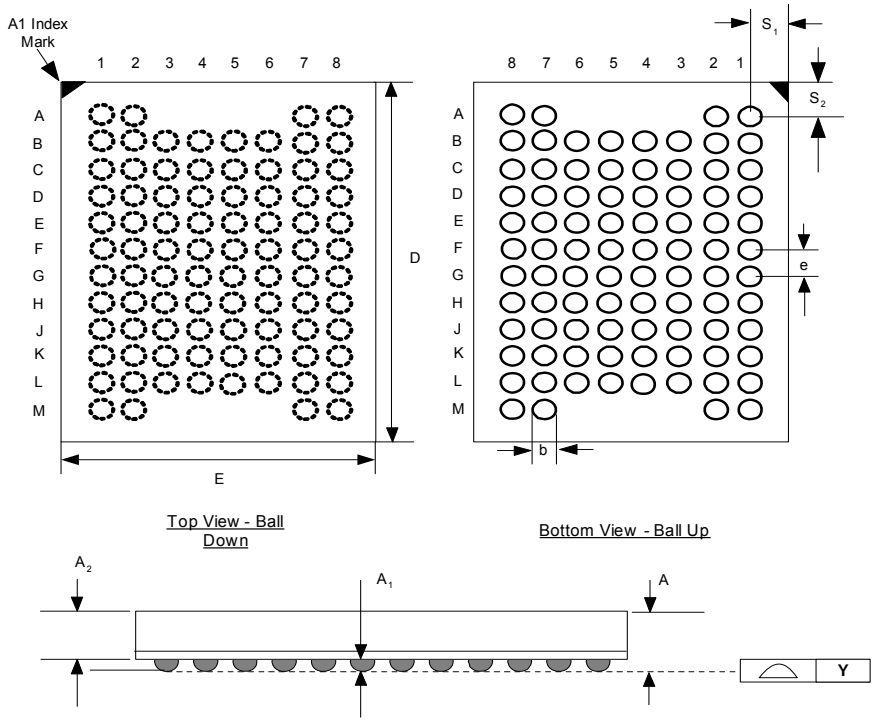

Drawing not to scale.

		Millimeters			Inches		
Dimensions	**Symbol**	**Min**	**Nom**	**Max**	**Min**	**Nom**	**Max**
Package Height	A	-	-	1.200	-	-	0.0472
Ball Height	A1	0.200	-	-	0.0079	-	-
Package Body Thickness	A2	-	0.860	-	-	0.0339	-
Ball (Lead) Width	b	0.325	0.375	0.425	0.0128	0.0148	0.0167
Package Body Width	D	9.900	10.000	10.100	0.3898	0.3937	0.3976
Package Body Length	E	7.900	8.000	8.100	0.3110	0.3150	0.3189
Pitch	e	-	0.800	-	-	0.0315	-
Ball (Lead) Count	N	-	88	-	-	88	-
Seating Plane Coplanarity	Y	-	-	0.100	-	-	0.0039
Corner to Ball A1 Distance Along E	S1	1.100	1.200	1.300	0.0433	0.0472	0.0512
Corner to Ball A1 Distance Along D	S2	0.500	0.600	0.700	0.0197	0.0236	0.0276

Figure 4: 256-Mbit, 88-ball (80 active) QUAD+ SCSP Specifications (8x11x1.0 mm)

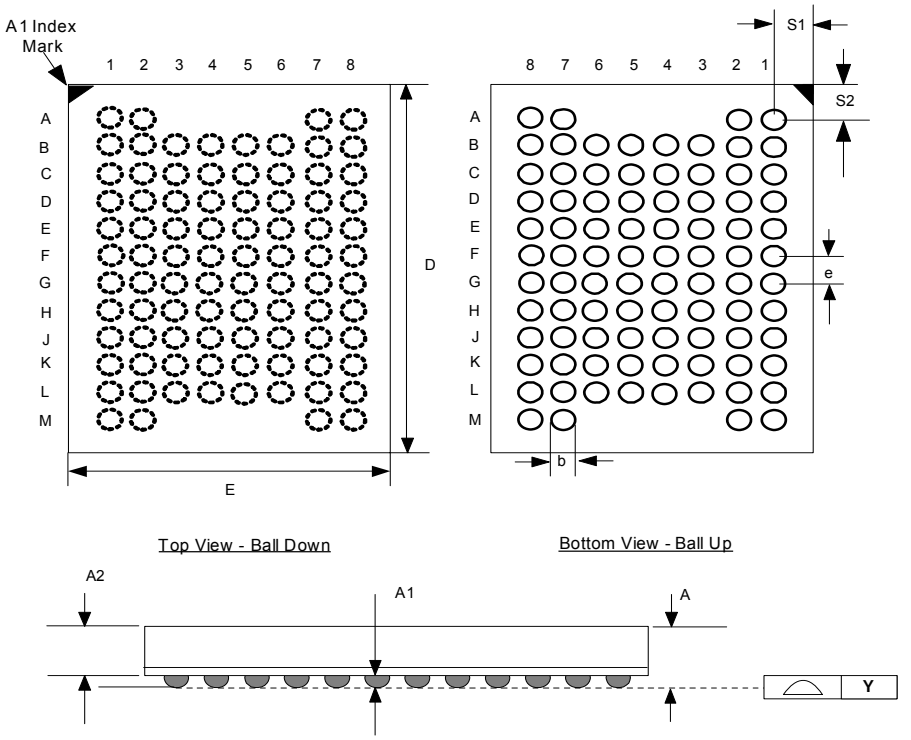

Drawing not to scale.

Note: Dimensions A1, A2, and b are preliminary

		Millimeters			Inches		
Dimensions	**Symbol**	**Min**	**Nom**	**Max**	**Min**	**Nom**	**Max**
Package Height	A	-	-	1.000	-	-	0.0394
Ball Height	A1	0.117	-	-	0.0046	-	-
Package Body Thickness	A2	-	0.740	-	-	0.0291	-
Ball (Lead) Width	b	0.300	0.350	0.400	0.0118	0.0138	0.0157
Package Body Length	D	10.900	11.00	11.100	0.4291	0.4331	0.4370
Package Body Width	E	7.900	8.00	8.100	0.3110	0.3150	0.3189
Pitch	e	-	0.80	-	-	0.0315	-
Ball (Lead) Count	N	-	88	-	-	88	-
Seating Plane Coplanarity	Y	-	-	0.100	-	-	0.0039
Corner to Ball A1 Distance Along E	S1	1.100	1.200	1.300	0.0433	0.0472	0.0512
Corner to Ball A1 Distance Along D	S2	1.000	1.100	1.200	0.0394	0.0433	0.0472

Figure 5: 512-Mbit, 88-ball (80 active) QUAD+ SCSP Specifications (8x11x1.2 mm)

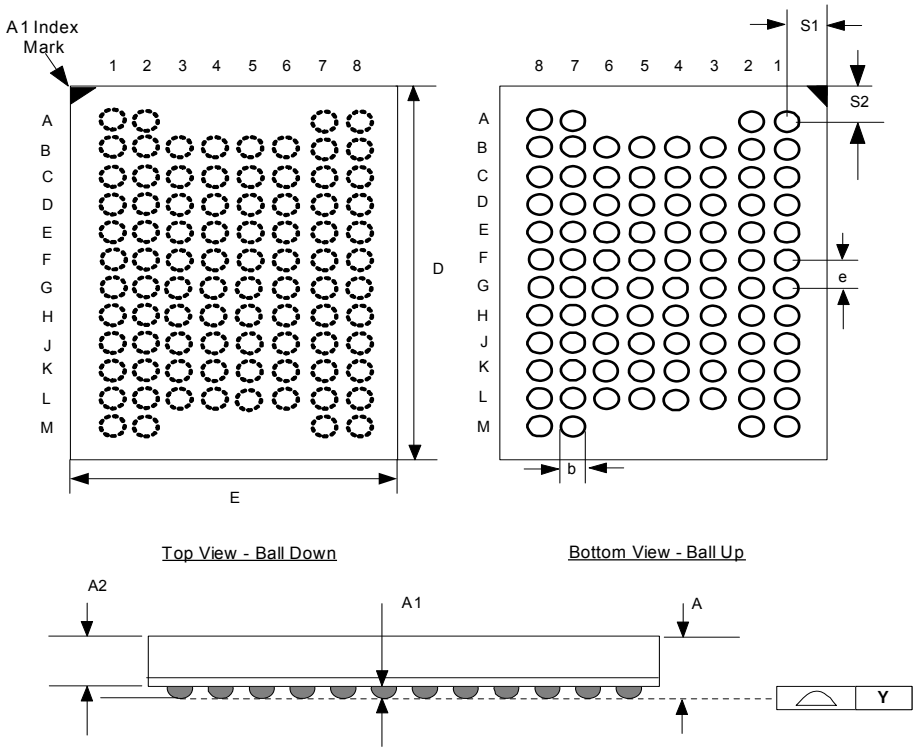

Drawing not to scale.

		Millimeters			Inches		
Dimensions	**Symbol**	**Min**	**Nom**	**Max**	**Min**	**Nom**	**Max**
Package Height	A	-	-	1.200	-	-	0.0472
Ball Height	A1	0.200	-	-	0.0079	-	-
Package Body Thickness	A2	-	0.860	-	-	0.0339	-
Ball (Lead) Width	b	0.325	0.375	0.425	0.0128	0.0148	0.0167
Package Body Length	D	10.900	11.000	11.100	0.4291	0.4331	0.4370
Package Body Width	E	7.900	8.000	8.100	0.3110	0.3150	0.3189
Pitch	e	-	0.800	-	-	0.0315	-
Ball (Lead) Count	N	-	88	-	-	88	-
Seating Plane Coplanarity	Y	-	-	0.100	-	-	0.0039
Corner to Ball A1 Distance Along E	S1	1.100	1.200	1.300	0.0433	0.0472	0.0512
Corner to Ball A1 Distance Along D	S2	1.000	1.100	1.200	0.0394	0.0433	0.0472

3.0 Ballouts

Figure 6: 56-Lead TSOP Pinout (64/128/256/512- Mbit)

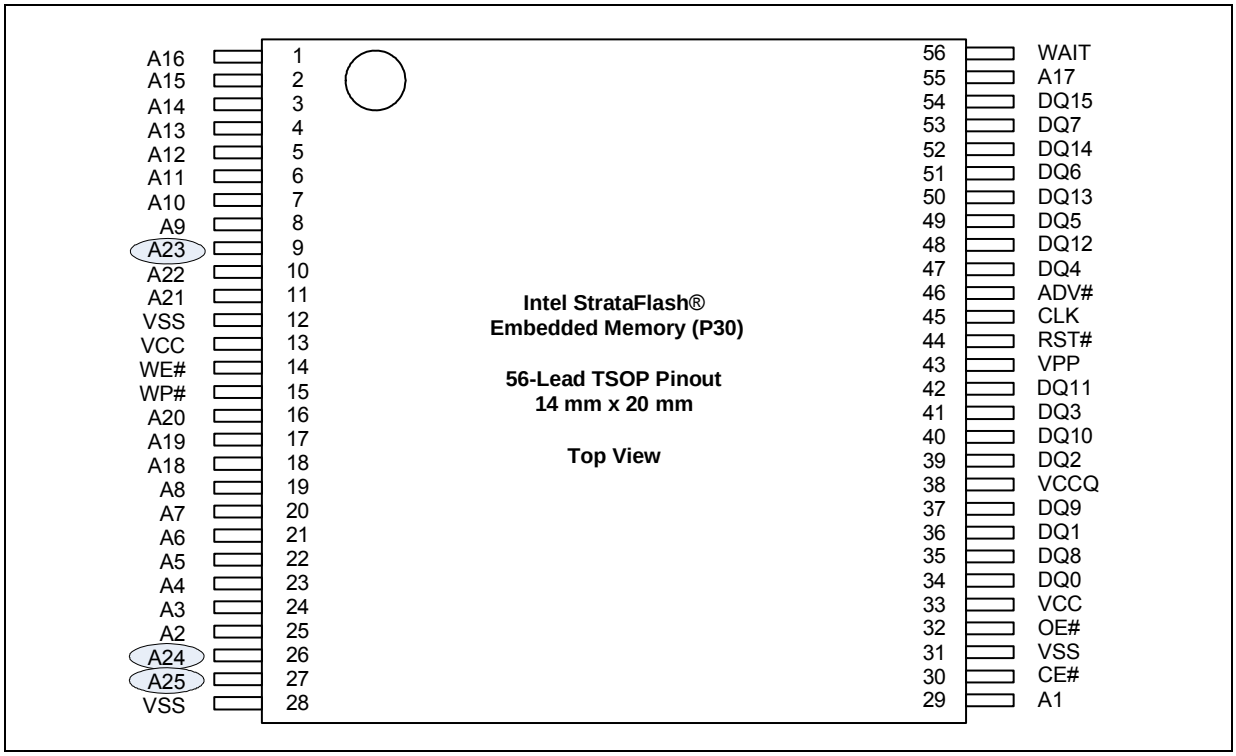

Notes:

1. A1 is the least significant address bit.
2. A23 is valid for 128-Mbit densities and above; otherwise, it is a no connect (NC).
3. A24 is valid for 256-Mbit densities; otherwise, it is a no connect (NC).
4. A25 is valid for 512-Mbit densities; otherwise, it is a no connect (NC).
5. Please refer to the latest specification update for synchronous read operation with the TSOP package. The synchronous read input signals (i.e. ADV# and CLK) should be tied off to support asynchronous reads. See Section 4.0, "Signals" on page 19.

Figure 7: 64-Ball Easy BGA Ballout (64/128/256/512-Mbit)

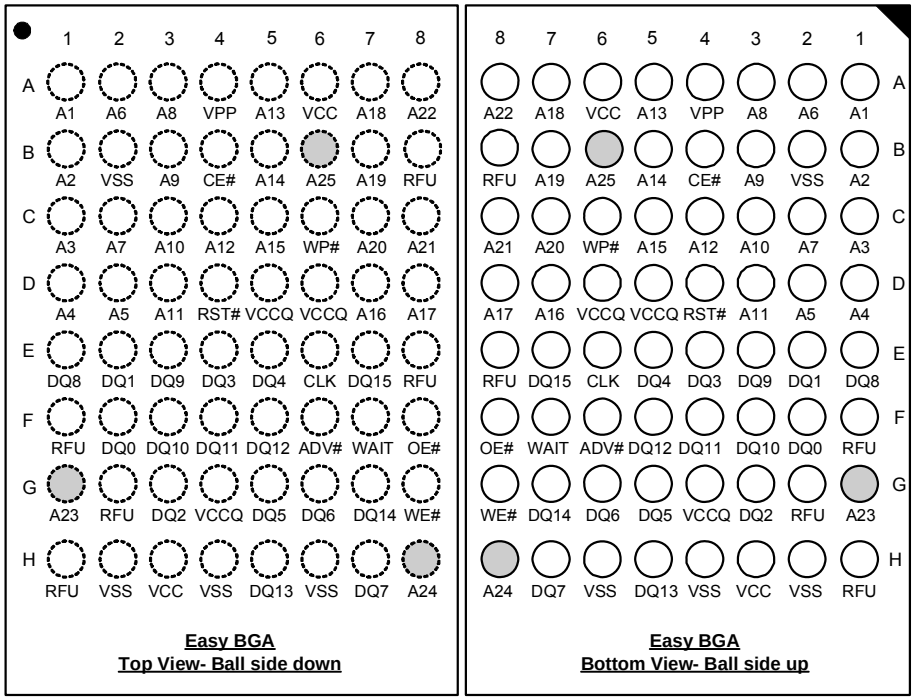

Notes:

1. A1 is the least significant address bit.
2. A23 is valid for 128-Mbit densities and above; otherwise, it is a no connect (NC).
3. A24 is valid for 256-Mbit densities and above; otherwise, it is a no connect (NC).
4. A25 is valid for 512-Mbit densities; otherwise, it is a no connect (NC).

Figure 8: 88-Ball (80-Active Ball) QUAD+ SCSP Ballout

Pin 1

	1	2	3	4	5	6	7	8	
A	DU	DU	Depop	Depop	Depop	Depop	DU	DU	A
B	A4	A18	A19	VSS	VCC	VCC	A21	A11	B
C	A5	RFU	A23	VSS	RFU	CLK	A22	A12	C
D	A3	A17	A24	VPP	RFU	RFU	A9	A13	D
E	A2	A7	RFU	WP#	ADV#	A20	A10	A15	E
F	A1	A6	RFU	RST#	WE#	A8	A14	A16	F
G	A0	DQ8	DQ2	DQ10	DQ5	DQ13	WAIT	F2-CE#	G
H	RFU	DQ0	DQ1	DQ3	DQ12	DQ14	DQ7	F2-OE#	H
J	RFU	F1-OE#	DQ9	DQ11	DQ4	DQ6	DQ15	VCCQ	J
K	F1-CE#	RFU	RFU	RFU	RFU	VCC	VCCQ	RFU	K
L	VSS	VSS	VCCQ	VCC	VSS	VSS	VSS	VSS	L
M	DU	DU	Depop	Depop	Depop	Depop	DU	DU	M
	1	2	3	4	5	6	7	8	

Notes:

1. A22 is valid for 128-Mbit densities and above; otherwise, it is a no connect (NC).
2. A23 is valid for 256-Mbit densities and above; otherwise, it is a no connect (NC).
3. A24 is valid for 512-Mbit densities and above; otherwise, it is a no connect (NC).
4. F2-CE# and F2-OE# are no connect (NC) for all densities.

4.0 Signals

This section has signal descriptions for the various P30 packages.

Table 8: TSOP and Easy BGA Signal Descriptions (Sheet 1 of 2)

Symbol	Type	Name and Function
A[MAX:1]	Input	**ADDRESS INPUTS:** Device address inputs. 64-Mbit: A[22:1]; 128-Mbit: A[23:1]; 256-Mbit: A[24:1]; 512-Mbit: A[25:1]. *Note:* The virtual selection of the 256-Mbit "Top parameter" die in the dual-die 512-Mbit configuration is accomplished by setting A[25] high (V_{IH}).
DQ[15:0]	Input/ Output	**DATA INPUT/OUTPUTS:** Inputs data and commands during write cycles; outputs data during memory, Status Register, Protection Register, and Read Configuration Register reads. Data balls float when the CE# or OE# are deasserted. Data is internally latched during writes.
ADV#	Input	**ADDRESS VALID:** Active low input. During synchronous read operations, addresses are latched on the rising edge of ADV#, or on the next valid CLK edge with ADV# low, whichever occurs first. In asynchronous mode, the address is latched when ADV# going high or continuously flows through if ADV# is held low. WARNING: Designs not using ADV# must tie it to VSS to allow addresses to flow through.
CE#	Input	**FLASH CHIP ENABLE:** Active low input. CE# low selects the associated flash memory die. When asserted, flash internal control logic, input buffers, decoders, and sense amplifiers are active. When deasserted, the associated flash die is deselected, power is reduced to standby levels, data and WAIT outputs are placed in high-Z state. WARNING: Chip enable must be driven high when device is not in use.
CLK	Input	**CLOCK:** Synchronizes the device with the system's bus frequency in synchronous-read mode. During synchronous read operations, addresses are latched on the rising edge of ADV#, or on the next valid CLK edge with ADV# low, whichever occurs first. WARNING: Designs not using CLK for synchronous read mode must tie it to VCCQ or VSS.
OE#	Input	**OUTPUT ENABLE:** Active low input. OE# low enables the device's output data buffers during read cycles. OE# high places the data outputs and WAIT in High-Z.
RST#	Input	**RESET:** Active low input. RST# resets internal automation and inhibits write operations. This provides data protection during power transitions. RST# high enables normal operation. Exit from reset places the device in asynchronous read array mode.
WAIT	Output	**WAIT:** Indicates data valid in synchronous array or non-array burst reads. Read Configuration Register bit 10 (RCR[10], WT) determines its polarity when asserted. WAIT's active output is V_{OL} or V_{OH} when CE# and OE# are V_{IL}. WAIT is high-Z if CE# or OE# is V_{IH}. • In synchronous array or non-array read modes, WAIT indicates invalid data when asserted and valid data when deasserted. • In asynchronous page mode, and all write modes, WAIT is deasserted.
WE#	Input	**WRITE ENABLE:** Active low input. WE# controls writes to the device. Address and data are latched on the rising edge of WE#.
WP#	Input	**WRITE PROTECT:** Active low input. WP# low enables the lock-down mechanism. Blocks in lock-down cannot be unlocked with the Unlock command. WP# high overrides the lock-down function enabling blocks to be erased or programmed using software commands.
VPP	Power/ Input	**Erase and Program Power:** A valid voltage on this pin allows erasing or programming. Memory contents cannot be altered when $V_{PP} \leq V_{PPLK}$. Block erase and program at invalid V_{PP} voltages should not be attempted. Set $V_{PP} = V_{PPL}$ for in-system program and erase operations. To accommodate resistor or diode drops from the system supply, the V_{IH} level of V_{PP} can be as low as V_{PPL} min. V_{PP} must remain above V_{PPL} min to perform in-system flash modification. VPP may be 0 V during read operations. V_{PPH} can be applied to main blocks for 1000 cycles maximum and to parameter blocks for 2500 cycles. VPP can be connected to 9 V for a cumulative total not to exceed 80 hours. Extended use of this pin at 9 V may reduce block cycling capability.
VCC	Power	**Device Core Power Supply:** Core (logic) source voltage. Writes to the flash array are inhibited when $V_{CC} \leq V_{LKO}$. Operations at invalid V_{CC} voltages should not be attempted.
VCCQ	Power	**Output Power Supply:** Output-driver source voltage.
VSS	Power	**Ground:** Connect to system ground. Do not float any VSS connection.

Table 8: TSOP and Easy BGA Signal Descriptions (Sheet 2 of 2)

Symbol	Type	Name and Function
RFU	—	**Reserved for Future Use:** Reserved by Numonyx for future device functionality and enhancement. These should be treated in the same way as a Do Not Use (DU) signal.
DU	—	**Do Not Use:** Do not connect to any other signal, or power supply; must be left floating.
NC	—	**No Connect:** No internal connection; can be driven or floated.

Table 9: QUAD+ SCSP Signal Descriptions (Sheet 1 of 2)

Symbol	Type	Name and Function
A[MAX:0]	Input	**ADDRESS INPUTS:** Device address inputs. 64-Mbit: A[21:0]; 128-Mbit: A[22:0]; 256-Mbit: A[23:0]; 512-Mbit: A[24:0]. *Note:* The virtual selection of the 256-Mbit "Top parameter" die in the dual-die 512-Mbit configuration is accomplished by setting A[25] high (V_{IH}).
DQ[15:0]	Input/ Output	**DATA INPUT/OUTPUTS:** Inputs data and commands during write cycles; outputs data during memory, Status Register, Protection Register, and Read Configuration Register reads. Data balls float when the CE# or OE# are deasserted. Data is internally latched during writes.
ADV#	Input	**ADDRESS VALID:** Active low input. During synchronous read operations, addresses are latched on the rising edge of ADV#, or on the next valid CLK edge with ADV# low, whichever occurs first. In asynchronous mode, the address is latched when ADV# going high or continuously flows through if ADV# is held low. WARNING: Designs not using ADV# must tie it to VSS to allow addresses to flow through.
F1-CE#	Input	**FLASH CHIP ENABLE:** Active low input. CE# low selects the associated flash memory die. When asserted, flash internal control logic, input buffers, decoders, and sense amplifiers are active. When deasserted, the associated flash die is deselected, power is reduced to standby levels, data and WAIT outputs are placed in high-Z state. WARNING: Chip enable must be driven high when device is not in use.
CLK	Input	**CLOCK:** Synchronizes the device with the system's bus frequency in synchronous-read mode. During synchronous read operations, addresses are latched on the rising edge of ADV#, or on the next valid CLK edge with ADV# low, whichever occurs first. WARNING: Designs not using CLK for synchronous read mode must tie it to VCCQ or VSS.
F1-OE#	Input	**OUTPUT ENABLE:** Active low input. OE# low enables the device's output data buffers during read cycles. OE# high places the data outputs and WAIT in High-Z.
RST#	Input	**RESET:** Active low input. RST# resets internal automation and inhibits write operations. This provides data protection during power transitions. RST# high enables normal operation. Exit from reset places the device in asynchronous read array mode.
WAIT	Output	**WAIT:** Indicates data valid in synchronous array or non-array burst reads. Read Configuration Register bit 10 (RCR[10], WT) determines its polarity when asserted. WAIT's active output is V_{OL} or V_{OH} when CE# and OE# are V_{IL}. WAIT is high-Z if CE# or OE# is V_{IH}. • In synchronous array or non-array read modes, WAIT indicates invalid data when asserted and valid data when deasserted. • In asynchronous page mode, and all write modes, WAIT is deasserted.
WE#	Input	**WRITE ENABLE:** Active low input. WE# controls writes to the device. Address and data are latched on the rising edge of WE#.
WP#	Input	**WRITE PROTECT:** Active low input. WP# low enables the lock-down mechanism. Blocks in lock-down cannot be unlocked with the Unlock command. WP# high overrides the lock-down function enabling blocks to be erased or programmed using software commands.
VPP	Power/ Input	**Erase and Program Power:** A valid voltage on this pin allows erasing or programming. Memory contents cannot be altered when $V_{PP} \leq V_{PPLK}$. Block erase and program at invalid V_{PP} voltages should not be attempted. Set $V_{PP} = V_{PPL}$ for in-system program and erase operations. To accommodate resistor or diode drops from the system supply, the V_{IH} level of V_{PP} can be as low as V_{PPL} min. V_{PP} must remain above V_{PPL} min to perform in-system flash modification. VPP may be 0 V during read operations. V_{PPH} can be applied to main blocks for 1000 cycles maximum and to parameter blocks for 2500 cycles. VPP can be connected to 9 V for a cumulative total not to exceed 80 hours. Extended use of this pin at 9 V may reduce block cycling capability.

Table 9: QUAD+ SCSP Signal Descriptions (Sheet 2 of 2)

Symbol	Type	Name and Function
VCC	Power	**Device Core Power Supply:** Core (logic) source voltage. Writes to the flash array are inhibited when $V_{CC} \leq V_{LKO}$. Operations at invalid V_{CC} voltages should not be attempted.
VCCQ	Power	**Output Power Supply:** Output-driver source voltage.
VSS	Power	**Ground:** Connect to system ground. Do not float any VSS connection.
RFU	—	**Reserved for Future Use:** Reserved by Numonyx for future device functionality and enhancement. These should be treated in the same way as a Do Not Use (DU) signal.
DU	—	**Do Not Use:** Do not connect to any other signal, or power supply; must be left floating.
NC	—	**No Connect:** No internal connection; can be driven or floated.

4.1 Dual-Die Configurations

Figure 9: 512-Mbit Easy BGA and TSOP Top or Bottom Parameter Block Diagram

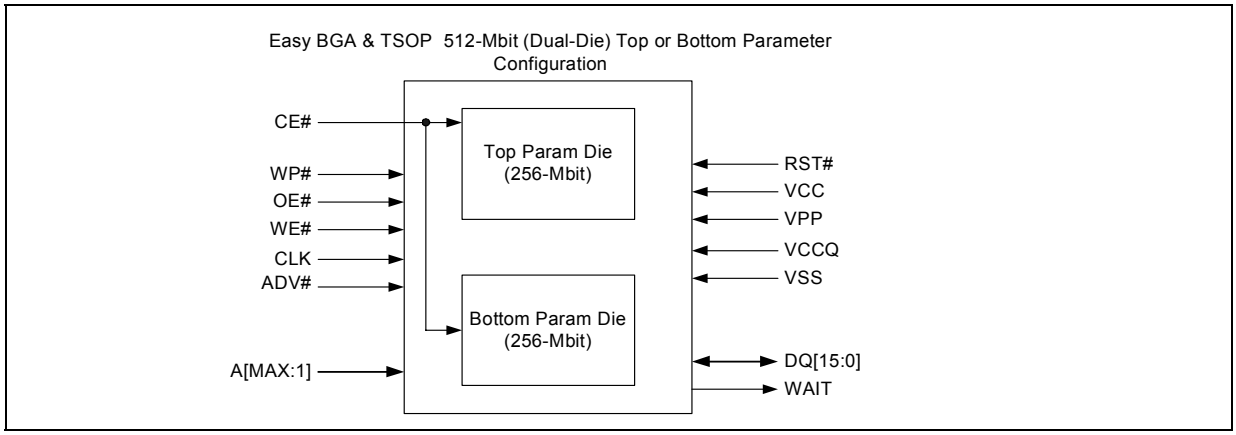

Figure 10: 512-Mbit QUAD+ SCSP Top or Bottom Parameter Block Diagram

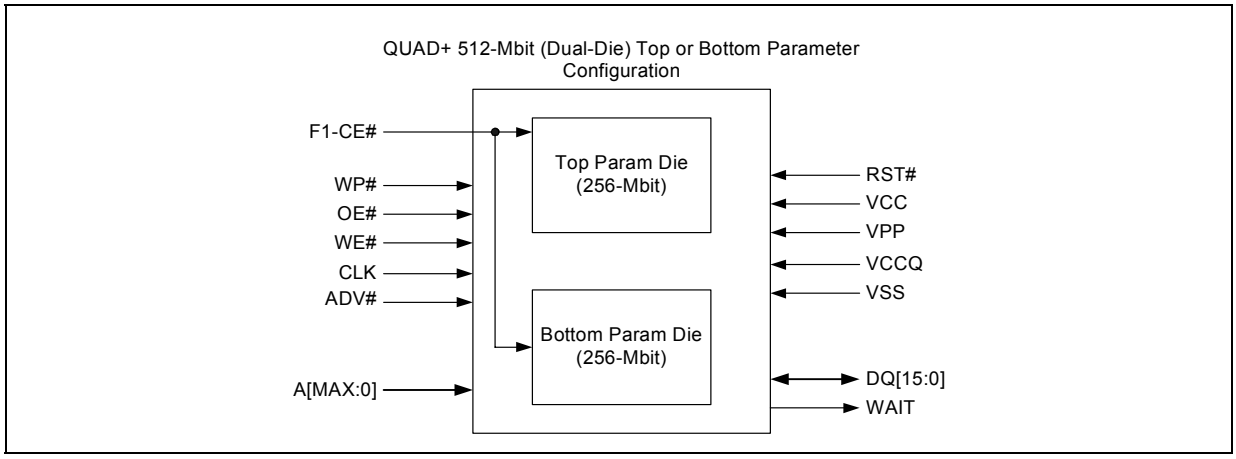

Note: $A_{max} = V_{ih}$ selects the Top parameter Die; $A_{max} = V_{il}$ selects the Bottom Parameter Die.

5.0 Bus Operations

CE# low and RST# high enable device read operations. The device internally decodes upper address inputs to determine the accessed block. ADV# low opens the internal address latches. OE# low activates the outputs and gates selected data onto the I/O bus.

In asynchronous mode, the address is latched when ADV# goes high or continuously flows through if ADV# is held low. In synchronous mode, the address is latched by the first of either the rising ADV# edge or the next valid CLK edge with ADV# low (WE# and RST# must be V_{IH}; CE# must be V_{IL}).

Bus cycles to/from the P30 device conform to standard microprocessor bus operations. Table 10 summarizes the bus operations and the logic levels that must be applied to the device control signal inputs.

Table 10: Bus Operations Summary

Bus Operation		RST#	CLK	ADV#	CE#	OE#	WE#	WAIT	DQ[15:0]	Notes
Read	Asynchronous	V_{IH}	X	L	L	L	H	Deasserted	Output	
	Synchronous	V_{IH}	Running	L	L	L	H	Driven	Output	
Write		V_{IH}	X	L	L	H	L	High-Z	Input	1
Output Disable		V_{IH}	X	X	L	H	H	High-Z	High-Z	2
Standby		V_{IH}	X	X	H	X	X	High-Z	High-Z	2
Reset		V_{IL}	X	X	X	X	X	High-Z	High-Z	2,3

Notes:
1. Refer to the Table 12, “Command Bus Cycles” on page 26 for valid DQ[15:0] during a write operation.
2. X = Don’t Care (H or L).
3. RST# must be at V_{SS} ± 0.2 V to meet the maximum specified power-down current.

5.1 Reads

To perform a read operation, RST# and WE# must be deasserted while CE# and OE# are asserted. CE# is the device-select control. When asserted, it enables the flash memory device. OE# is the data-output control. When asserted, the addressed flash memory data is driven onto the I/O bus.

5.2 Writes

To perform a write operation, both CE# and WE# are asserted while RST# and OE# are deasserted. During a write operation, address and data are latched on the rising edge of WE# or CE#, whichever occurs first. Table 12, “Command Bus Cycles” on page 26 shows the bus cycle sequence for each of the supported device commands, while Table 11, “Command Codes and Definitions” on page 24 describes each command. See Section 15.0, “AC Characteristics” on page 55 for signal-timing details.

Note: Write operations with invalid V_{CC} and/or V_{PP} voltages can produce spurious results and should not be attempted.

5.3 Output Disable

When OE# is deasserted, device outputs DQ[15:0] are disabled and placed in a high-impedance (High-Z) state, WAIT is also placed in High-Z.

5.4 Standby

When CE# is deasserted the device is deselected and placed in standby, substantially reducing power consumption. In standby, the data outputs are placed in High-Z, independent of the level placed on OE#. Standby current, I_{CCS}, is the average current measured over any 5 ms time interval, 5 µs after CE# is deasserted. During standby, average current is measured over the same time interval 5 µs after CE# is deasserted.

When the device is deselected (while CE# is deasserted) during a program or erase operation, it continues to consume active power until the program or erase operation is completed.

5.5 Reset

As with any automated device, it is important to assert RST# when the system is reset. When the system comes out of reset, the system processor attempts to read from the flash memory if it is the system boot device. If a CPU reset occurs with no flash memory reset, improper CPU initialization may occur because the flash memory may be providing status information rather than array data. Flash memory devices from Numonyx allow proper CPU initialization following a system reset through the use of the RST# input. RST# should be controlled by the same low-true reset signal that resets the system CPU.

After initial power-up or reset, the device defaults to asynchronous Read Array mode, and the Status Register is set to 0x80. Asserting RST# de-energizes all internal circuits, and places the output drivers in High-Z. When RST# is asserted, the device shuts down the operation in progress, a process which takes a minimum amount of time to complete. When RST# has been deasserted, the device is reset to asynchronous Read Array state.

Note: If RST# is asserted during a program or erase operation, the operation is terminated and the memory contents at the aborted location (for a program) or block (for an erase) are no longer valid, because the data may have been only partially written or erased.

When returning from a reset (RST# deasserted), a minimum wait is required before the initial read access outputs valid data. Also, a minimum delay is required after a reset before a write cycle can be initiated. After this wake-up interval passes, normal operation is restored. See Section 15.0, “AC Characteristics” on page 55 for details about signal-timing.

6.0 Command Set

6.1 Device Command Codes

The system CPU provides control of all in-system read, write, and erase operations of the device via the system bus. The on-chip Write State Machine (WSM) manages all block-erase and word-program algorithms.

Device commands are written to the Command User Interface (CUI) to control all flash memory device operations. The CUI does not occupy an addressable memory location; it is the mechanism through which the flash device is controlled.

Table 11: Command Codes and Definitions (Sheet 1 of 2)

Mode	Code	Device Mode	Description
Read	0xFF	Read Array	Places the device in Read Array mode. Array data is output on DQ[15:0].
	0x70	Read Status Register	Places the device in Read Status Register mode. The device enters this mode after a program or erase command is issued. Status Register data is output on DQ[7:0].
	0x90	Read Device ID or Configuration Register	Places device in Read Device Identifier mode. Subsequent reads output manufacturer/device codes, Configuration Register data, Block Lock status, or Protection Register data on DQ[15:0].
	0x98	Read CFI	Places the device in Read CFI mode. Subsequent reads output Common Flash Interface information on DQ[7:0].
	0x50	Clear Status Register	The WSM can only set Status Register error bits. The Clear Status Register command is used to clear the SR error bits.
Write	0x40	Word Program Setup	First cycle of a 2-cycle programming command; prepares the CUI for a write operation. On the next write cycle, the address and data are latched and the WSM executes the programming algorithm at the addressed location. During program operations, the device responds only to Read Status Register and Program Suspend commands. CE# or OE# must be toggled to update the Status Register in asynchronous read. CE# or ADV# must be toggled to update the Status Register Data for synchronous Non-array reads. The Read Array command must be issued to read array data after programming has finished.
Write	0x10	Alternate Word Program Setup	Equivalent to the Word Program Setup command, 0x40.
	0xE8	Buffered Program	This command loads a variable number of words up to the buffer size of 32 words onto the program buffer.
	0xD0	Buffered Program Confirm	The confirm command is Issued after the data streaming for writing into the buffer is done. This instructs the WSM to perform the Buffered Program algorithm, writing the data from the buffer to the flash memory array.
	0x80	BEFP Setup	First cycle of a 2-cycle command; initiates Buffered Enhanced Factory Program mode (BEFP). The CUI then waits for the BEFP Confirm command, 0xD0, that initiates the BEFP algorithm. All other commands are ignored when BEFP mode begins.
	0xD0	BEFP Confirm	If the previous command was BEFP Setup (0x80), the CUI latches the address and data, and prepares the device for BEFP mode.

Table 11: Command Codes and Definitions (Sheet 2 of 2)

Mode	Code	Device Mode	Description
Erase	0x20	Block Erase Setup	First cycle of a 2-cycle command; prepares the CUI for a block-erase operation. The WSM performs the erase algorithm on the block addressed by the Erase Confirm command. If the next command *is not* the Erase Confirm (0xD0) command, the CUI sets Status Register bits SR[4] and SR[5], and places the device in read status register mode.
	0xD0	Block Erase Confirm	If the first command was Block Erase Setup (0x20), the CUI latches the address and data, and the WSM erases the addressed block. During block-erase operations, the device responds only to Read Status Register and Erase Suspend commands. CE# or OE# must be toggled to update the Status Register in asynchronous read. CE# or ADV# must be toggled to update the Status Register Data for synchronous Non-array reads
Suspend	0xB0	Program or Erase Suspend	This command issued to any device address initiates a suspend of the currently-executing program or block erase operation. The Status Register indicates successful suspend operation by setting either SR[2] (program suspended) or SR[6] (erase suspended), along with SR[7] (ready). The Write State Machine remains in the suspend mode regardless of control signal states (except for RST# asserted).
	0xD0	Suspend Resume	This command issued to any device address resumes the suspended program or block-erase operation.
Block Locking/ Unlocking	0x60	Lock Block Setup	First cycle of a 2-cycle command; prepares the CUI for block lock configuration changes. If the next command is not Block Lock (0x01), Block Unlock (0xD0), or Block Lock-Down (0x2F), the CUI sets Status Register bits SR[4] and SR[5], indicating a command sequence error.
	0x01	Lock Block	If the previous command was Block Lock Setup (0x60), the addressed block is locked.
	0xD0	Unlock Block	If the previous command was Block Lock Setup (0x60), the addressed block is unlocked. If the addressed block is in a lock-down state, the operation has no effect.
	0x2F	Lock-Down Block	If the previous command was Block Lock Setup (0x60), the addressed block is locked down.
Protection	0xC0	Program Protection Register Setup	First cycle of a 2-cycle command; prepares the device for a Protection Register or Lock Register program operation. The second cycle latches the register address and data, and starts the programming algorithm
Configuration	0x60	Read Configuration Register Setup	First cycle of a 2-cycle command; prepares the CUI for device read configuration. If the Set Read Configuration Register command (0x03) is not the next command, the CUI sets Status Register bits SR[4] and SR[5], indicating a command sequence error.
	0x03	Read Configuration Register	If the previous command was Read Configuration Register Setup (0x60), the CUI latches the address and writes A[15:0] to the Read Configuration Register. Following a Configure Read Configuration Register command, subsequent read operations access array data.

6.2 Device Command Bus Cycles

Device operations are initiated by writing specific device commands to the Command User Interface (CUI). Several commands are used to modify array data including Word Program and Block Erase commands. Writing either command to the CUI initiates a sequence of internally-timed functions that culminate in the completion of the requested task. However, the operation can be aborted by either asserting RST# or by issuing an appropriate suspend command.

Table 12: Command Bus Cycles

Mode	Command	Bus Cycles	First Bus Cycle			Second Bus Cycle		
			Oper	Addr(1)	Data(2)	Oper	Addr(1)	Data(2)
Read	Read Array	1	Write	DnA	0xFF	-	-	-
	Read Device Identifier	≥ 2	Write	DnA	0x90	Read	DBA + IA	ID
	Read CFI	≥ 2	Write	DnA	0x98	Read	DBA + CFI-A	CFI-D
	Read Status Register	2	Write	DnA	0x70	Read	DnA	SRD
	Clear Status Register	1	Write	DnA	0x50	-	-	-
Program	Word Program	2	Write	WA	0x40/ 0x10	Write	WA	WD
	Buffered Program(3)	> 2	Write	WA	0xE8	Write	WA	N - 1
	Buffered Enhanced Factory Program (BEFP)(4)	> 2	Write	WA	0x80	Write	WA	0xD0
Erase	Block Erase	2	Write	BA	0x20	Write	BA	0xD0
Suspend	Program/Erase Suspend	1	Write	DnA	0xB0	-	-	-
	Program/Erase Resume	1	Write	DnA	0xD0	-	-	-
Block Locking / Unlocking	Lock Block	2	Write	BA	0x60	Write	BA	0x01
	Unlock Block	2	Write	BA	0x60	Write	BA	0xD0
	Lock-down Block	2	Write	BA	0x60	Write	BA	0x2F
OTP Register	Program OTP Register	2	Write	PRA	0xC0	Write	OTP-RA	OTP-D
	Program Lock Register	2	Write	LRA	0xC0	Write	LRA	LRD
Configuration	Program Read Configuration Register	2	Write	RCD	0x60	Write	RCD	0x03

Notes:

1. First command cycle address should be the same as the operation's target address.
   DBA = Device Base Address (NOTE: needed for dual-die 512 Mb device)
   DnA = Address within the device.
   IA = Identification code address offset.
   CFI-A = Read CFI address offset.
   WA = Word address of memory location to be written.
   BA = Address within the block.
   OTP-RA = Protection Register address.
   LRA = Lock Register address.
   RCD = Read Configuration Register data on QUAD+ A[15:0] or EASY BGA A[16:1].
2. ID = Identifier data.
   CFI-D = CFI data on DQ[15:0].
   SRD = Status Register data.
   WD = Word data.
   N = Word count of data to be loaded into the write buffer.
   OTP-D = Protection Register data.
   LRD = Lock Register data.
3. The second cycle of the Buffered Program Command is the word count of the data to be loaded into the write buffer. This is followed by up to 32 words of data.Then the confirm command (0xD0) is issued, triggering the array programming operation.
4. The confirm command (0xD0) is followed by the buffer data.

7.0 Read Operation

The device supports two read modes: asynchronous page mode and synchronous burst mode. Asynchronous page mode is the default read mode after device power-up or a reset. The Read Configuration Register must be configured to enable synchronous burst reads of the flash memory array (see Section 11.2, "Read Configuration Register" on page 41).

The device can be in any of four read states: Read Array, Read Identifier, Read Status or Read CFI. Upon power-up, or after a reset, the device defaults to Read Array. To change the read state, the appropriate read command must be written to the device (see Section 6.0, "Command Set" on page 24).

7.1 Asynchronous Page-Mode Read

Following a device power-up or reset, asynchronous page mode is the default read mode and the device is set to Read Array. However, to perform array reads after any other device operation (e.g. write operation), the Read Array command must be issued in order to read from the flash memory array.

Note: Asynchronous page-mode reads can only be performed when Read Configuration Register bit RCR[15] is set (see Section 11.2, "Read Configuration Register" on page 41).

To perform an asynchronous page-mode read, an address is driven onto the Address bus, and CE# and ADV# are asserted. WE# and RST# must already have been deasserted. WAIT is deasserted during asynchronous page mode. ADV# can be driven high to latch the address, or it must be held low throughout the read cycle. CLK is not used for asynchronous page-mode reads, and is ignored. If only asynchronous reads are to be performed, CLK should be tied to a valid V_{IH} level, WAIT signal can be floated and ADV# must be tied to ground. Array data is driven onto DQ[15:0] after an initial access time t_{AVQV} delay. (see Section 15.0, "AC Characteristics" on page 55).

In asynchronous page mode, four data words are "sensed" simultaneously from the flash memory array and loaded into an internal page buffer. The buffer word corresponding to the initial address on the Address bus is driven onto DQ[15:0] after the initial access delay. The lowest two address bits determine which word of the 4-word page is output from the data buffer at any given time.

7.2 Synchronous Burst-Mode Read

To perform a synchronous burst-read, an initial address is driven onto the Address bus, and CE# and ADV# are asserted. WE# and RST# must already have been deasserted. ADV# is asserted, and then deasserted to latch the address. Alternately, ADV# can remain asserted throughout the burst access, in which case the address is latched on the next valid CLK edge while ADV# is asserted.

During synchronous array and non-array read modes, the first word is output from the data buffer on the next valid CLK edge after the initial access latency delay (see Section 11.2.2, "Latency Count" on page 42). Subsequent data is output on valid CLK edges following a minimum delay. However, for a synchronous non-array read, the same word of data will be output on successive clock edges until the burst length requirements are satisfied. Refer to the following waveforms for more detailed information:

- Figure 24, "Synchronous Single-Word Array or Non-array Read Timing" on page 61
- Figure 25, "Continuous Burst Read, Showing An Output Delay Timing" on page 62
- Figure 26, "Synchronous Burst-Mode Four-Word Read Timing" on page 62

7.3 Read Device Identifier

The Read Device Identifier command instructs the device to output manufacturer code, device identifier code, block-lock status, protection register data, or configuration register data.

Table 13: Device Identifier Information

Item	Address(1)	Data
Manufacturer Code	0x00	0089h
Device ID Code	0x01	ID
Block Lock Configuration: • Block Is Unlocked • Block Is Locked • Block Is not Locked-Down • Block Is Locked-Down	BBA + 0x02	Lock Bit: DQ_0 = 0b0 DQ_0 = 0b1 DQ_1 = 0b0 DQ_1 = 0b1
Read Configuration Register	0x05	RCR Contents
Lock Register 0	0x80	PR-LK0
64-bit Factory-Programmed Protection Register	0x81–0x84	Factory Protection Register Data
64-bit User-Programmable Protection Register	0x85–0x88	User Protection Register Data
Lock Register 1	0x89	PR-LK1
128-bit User-Programmable Protection Registers	0x8A–0x109	Protection Register Data

Notes:
1. BBA = Block Base Address.

Table 14: Device ID codes

ID Code Type	Device Density	Device Identifier Codes	
		–T (Top Parameter)	–B (Bottom Parameter)
Device Code	64-Mbit	8817	881A
	128-Mbit	8818	881B
	256-Mbit	8919	891C

Note: The 512-Mbit devices do not have a Device ID associated with them. Each die within the stack can be identified by either of the 256-Mbit Device ID codes depending on its parameter option.

7.4 Read CFI

The Read CFI command instructs the device to output Common Flash Interface (CFI) data when read. See Section 6.0, “Command Set” on page 24 for details on issuing the Read CFI command. Appendix A, “Common Flash Interface Tables” on page 70 shows CFI information and address offsets within the CFI database.

8.0 Program Operation

The device supports three programming methods: Word Programming (40h/10h), Buffered Programming (E8h, D0h), and Buffered Enhanced Factory Programming (80h, D0h). See Section 5.0, "Bus Operations" on page 22 for details on the various programming commands issued to the device. The following sections describe device programming in detail.

Successful programming requires the addressed block to be unlocked. If the block is locked down, WP# must be deasserted and the block must be unlocked before attempting to program the block. Attempting to program a locked block causes a program error (SR[4] and SR[1] set) and termination of the operation. See Section 10.0, "Security Modes" on page 37 for details on locking and unlocking blocks.

The Product Name is segmented into multiple 8-Mbit Programming Regions. See Section 1.4, "Memory Maps" on page 7 for complete addressing. Execute in Place (XIP) applications must partition the memory such that code and data are in separate programming regions. XIP is executing code directly from flash memory. Each Programming Region should contain only code or data but not both. The following terms define the difference between code and data. System designs must use these definitions when partitioning their code and data for the P30 device.

- Code: Execution code ran out of the flash device on a continuous basis in the system.
- Data: Information periodically programmed into the flash device and read back (e.g. execution code shadowed and executed in RAM, pictures, log files, etc.).

8.1 Word Programming

Word programming operations are initiated by writing the Word Program Setup command to the device (see Section 5.0, "Bus Operations" on page 22). This is followed by a second write to the device with the address and data to be programmed. The device outputs Status Register data when read. See Figure 34, "Word Program Flowchart" on page 80. V_{PP} must be above V_{PPLK}, and within the specified V_{PPL} min/max values.

During programming, the Write State Machine (WSM) executes a sequence of internally-timed events that program the desired data bits at the addressed location, and verifies that the bits are sufficiently programmed. Programming the flash memory array changes "ones" to "zeros". Memory array bits that are zeros can be changed to ones only by erasing the block (see Section 9.0, "Erase Operations" on page 35).

The Status Register can be examined for programming progress and errors by reading at any address. The device remains in the Read Status Register state until another command is written to the device.

Status Register bit SR[7] indicates the programming status while the sequence executes. Commands that can be issued to the device during programming are Program Suspend, Read Status Register, Read Device Identifier, Read CFI, and Read Array (this returns unknown data).

When programming has finished, Status Register bit SR[4] (when set) indicates a programming failure. If SR[3] is set, the WSM could not perform the word programming operation because V_{PP} was outside of its acceptable limits. If SR[1] is set, the word programming operation attempted to program a locked block, causing the operation to abort.

Before issuing a new command, the Status Register contents should be examined and then cleared using the Clear Status Register command. Any valid command can follow, when word programming has completed.

8.2 Factory Word Programming

Factory word programming is similar to word programming in that it uses the same commands and programming algorithms. However, factory word programming enhances the programming performance with $V_{PP} = V_{PPH}$. This can enable faster programming times during OEM manufacturing processes. Factory word programming is not intended for extended use. See Section 13.2, "Operating Conditions" on page 52 for limitations when $V_{PP} = V_{PPH}$.

Note: When $V_{PP} = V_{PPL}$, the device draws programming current from the V_{CC} supply. If V_{PP} is driven by a logic signal, V_{PPL} must remain above V_{PPL} MIN to program the device. When $V_{PP} = V_{PPH}$, the device draws programming current from the V_{PP} supply. Figure 11, "Example VPP Supply Connections" on page 34 shows examples of device power supply configurations.

8.3 Buffered Programming

The device features a 32-word buffer to enable optimum programming performance. For Buffered Programming, data is first written to an on-chip write buffer. Then the buffer data is programmed into the flash memory array in buffer-size increments. This can improve system programming performance significantly over non-buffered programming.

When the Buffered Programming Setup command is issued (see Section 6.0, "Command Set" on page 24), Status Register information is updated and reflects the availability of the buffer. SR[7] indicates buffer availability: if set, the buffer is available; if cleared, the buffer is not available. To retry, issue the Buffered Programming Setup command again, and re-check SR[7]. When SR[7] is set, the buffer is ready for loading. (see Figure 36, "Buffer Program Flowchart" on page 82).

On the next write, a word count is written to the device at the buffer address. This tells the device how many data words will be written to the buffer, up to the maximum size of the buffer.

On the next write, a device start address is given along with the first data to be written to the flash memory array. Subsequent writes provide additional device addresses and data. All data addresses must lie within the start address plus the word count. Optimum programming performance and lower power usage are obtained by aligning the starting address at the beginning of a 32-word boundary (A[4:0] = 0x00). Crossing a 32-word boundary during programming will double the total programming time.

After the last data is written to the buffer, the Buffered Programming Confirm command must be issued to the original block address. The WSM begins to program buffer contents to the flash memory array. If a command other than the Buffered Programming Confirm command is written to the device, a command sequence error occurs and Status Register bits SR[7,5,4] are set. If an error occurs while writing to the array, the device stops programming, and Status Register bits SR[7,4] are set, indicating a programming failure.

When Buffered Programming has completed, additional buffer writes can be initiated by issuing another Buffered Programming Setup command and repeating the buffered program sequence. Buffered programming may be performed with $V_{PP} = V_{PPL}$ or V_{PPH} (see Section 13.2, "Operating Conditions" on page 52 for limitations when operating the device with $V_{PP} = V_{PPH}$).

If an attempt is made to program past an erase-block boundary using the Buffered Program command, the device aborts the operation. This generates a command sequence error, and Status Register bits SR[5,4] are set.

If Buffered programming is attempted while V_{PP} is below V_{PPLK}, Status Register bits SR[4,3] are set. If any errors are detected that have set Status Register bits, the Status Register should be cleared using the Clear Status Register command.

8.4 Buffered Enhanced Factory Programming

Buffered Enhanced Factory Programing (BEFP) speeds up Multi-Level Cell (MLC) flash programming. The enhanced programming algorithm used in BEFP eliminates traditional programming elements that drive up overhead in device programmer systems.

BEFP consists of three phases: Setup, Program/Verify, and Exit (see Figure 37, "BEFP Flowchart" on page 83). It uses a write buffer to spread MLC program performance across 32 data words. Verification occurs in the same phase as programming to accurately program the flash memory cell to the correct bit state.

A single two-cycle command sequence programs the entire block of data. This enhancement eliminates three write cycles per buffer: two commands and the word count for each set of 32 data words. Host programmer bus cycles fill the device's write buffer followed by a status check. SR[0] indicates when data from the buffer has been programmed into sequential flash memory array locations.

Following the buffer-to-flash array programming sequence, the Write State Machine (WSM) increments internal addressing to automatically select the next 32-word array boundary. This aspect of BEFP saves host programming equipment the address-bus setup overhead.

With adequate continuity testing, programming equipment can rely on the WSM's internal verification to ensure that the device has programmed properly. This eliminates the external post-program verification and its associated overhead.

8.4.1 BEFP Requirements and Considerations

Table 15: BEFP Requirements

Parameter / Issue	Requirement	Notes
Case Temperature	T_C = 25 °C ± 5 °C	
V_{CC}	Within operating range	
VPP	Driven to V_{PPH}	
Setup and Confirm	Target block unlocked before issuing the BEFP Setup and Confirm commands	
Programming	The first-word address (WA0) of the block to be programmed must be held constant from the setup phase through all data streaming into the target block, until transition to the exit phase is desired	
Buffer Alignment	WA0 must align with the start of an array buffer boundary	1

Note:
1. Word buffer boundaries in the array are determined by A[4:0] (0x00 through 0x1F). The alignment start point is A[4:0] = 0x00.

Table 16: BEFP Considerations

Parameter / Issue	Requirement	Notes
Cycling	For optimum performance, cycling must be limited below 100 erase cycles per block.	1
Programming blocks	BEFP programs one block at a time; all buffer data must fall within a single block	2
Suspend	BEFP cannot be suspended	
Programming the flash memory array	Programming to the flash memory array can occur only when the buffer is full.	3

Note:
1. Some degradation in performance may occur if this limit is exceeded, but the internal algorithm continues to work properly.
2. If the internal address counter increments beyond the block's maximum address, addressing wraps around to the beginning of the block.
3. If the number of words is less than 32, remaining locations must be filled with 0xFFFF.

8.4.2 BEFP Setup Phase

After receiving the BEFP Setup and Confirm command sequence, Status Register bit SR[7] (Ready) is cleared, indicating that the WSM is busy with BEFP algorithm startup. A delay before checking SR[7] is required to allow the WSM enough time to perform all of its setups and checks (Block-Lock status, V_{PP} level, etc.). If an error is detected, SR[4] is set and BEFP operation terminates. If the block was found to be locked, SR[1] is also set. SR[3] is set if the error occurred due to an incorrect V_{PP} level.

Note: Reading from the device after the BEFP Setup and Confirm command sequence outputs Status Register data. Do not issue the Read Status Register command; it will be interpreted as data to be loaded into the buffer.

8.4.3 BEFP Program / Verify Phase

After the BEFP Setup Phase has completed, the host programming system must check SR[7,0] to determine the availability of the write buffer for data streaming. SR[7] cleared indicates the device is busy and the BEFP program/verify phase is activated. SR[0] indicates the write buffer is available.

Two basic sequences repeat in this phase: loading of the write buffer, followed by buffer data programming to the array. For BEFP, the count value for buffer loading is always the maximum buffer size of 32 words. During the buffer-loading sequence, data is stored to sequential buffer locations starting at address 0x00. Programming of the buffer contents to the flash memory array starts as soon as the buffer is full. If the number of words is less than 32, the remaining buffer locations must be filled with 0xFFFF.

Caution: **The buffer must be completely filled for programming to occur. Supplying an address outside of the current block's range during a buffer-fill sequence causes the algorithm to exit immediately. Any data previously loaded into the buffer during the fill cycle is not programmed into the array.**

The starting address for data entry must be buffer size aligned, if not the BEFP algorithm will be aborted and the program fails and (SR[4]) flag will be set.

Data words from the write buffer are directed to sequential memory locations in the flash memory array; programming continues from where the previous buffer sequence ended. The host programming system must poll SR[0] to determine when the buffer program sequence completes. SR[0] cleared indicates that all buffer data has been transferred to the flash array; SR[0] set indicates that the buffer is not available yet for the next fill cycle. The host system may check full status for errors at any time, but it is

only necessary on a block basis after BEFP exit. After the buffer fill cycle, no write cycles should be issued to the device until SR[0] = 0 and the device is ready for the next buffer fill.

Note: Any spurious writes are ignored after a buffer fill operation and when internal program is proceeding.

The host programming system continues the BEFP algorithm by providing the next group of data words to be written to the buffer. Alternatively, it can terminate this phase by changing the block address to one outside of the current block's range.

The Program/Verify phase concludes when the programmer writes to a different block address; data supplied must be 0xFFFF. Upon Program/Verify phase completion, the device enters the BEFP Exit phase.

8.4.4 BEFP Exit Phase

When SR[7] is set, the device has returned to normal operating conditions. A full status check should be performed at this time to ensure the entire block programmed successfully. When exiting the BEFP algorithm with a block address change, the read mode will not change. After BEFP exit, any valid command can be issued to the device.

8.5 Program Suspend

Issuing the Program Suspend command while programming suspends the programming operation. This allows data to be accessed from the device other than the one being programmed. The Program Suspend command can be issued to any device address. A program operation can be suspended to perform reads only. Additionally, a program operation that is running during an erase suspend can be suspended to perform a read operation (see Figure 35, "Program Suspend/Resume Flowchart" on page 81).

When a programming operation is executing, issuing the Program Suspend command requests the WSM to suspend the programming algorithm at predetermined points. The device continues to output Status Register data after the Program Suspend command is issued. Programming is suspended when Status Register bits SR[7,2] are set. Suspend latency is specified in Section 16.0, "Program and Erase Characteristics" on page 67.

To read data from the device, the Read Array command must be issued. Read Array, Read Status Register, Read Device Identifier, Read CFI, and Program Resume are valid commands during a program suspend.

During a program suspend, deasserting CE# places the device in standby, reducing active current. V_{PP} must remain at its programming level, and WP# must remain unchanged while in program suspend. If RST# is asserted, the device is reset.

8.6 Program Resume

The Resume command instructs the device to continue programming, and automatically clears Status Register bits SR[7,2]. This command can be written to any address. If error bits are set, the Status Register should be cleared before issuing the next instruction. RST# must remain deasserted (see Figure 35, "Program Suspend/ Resume Flowchart" on page 81).

8.7 Program Protection

When $V_{PP} = V_{IL}$, absolute hardware write protection is provided for all device blocks. If V_{PP} is at or below V_{PPLK}, programming operations halt and SR[3] is set indicating a V_{PP}-level error. Block lock registers are not affected by the voltage level on V_{PP}; they may still be programmed and read, even if V_{PP} is less than V_{PPLK}.

Figure 11: Example VPP Supply Connections

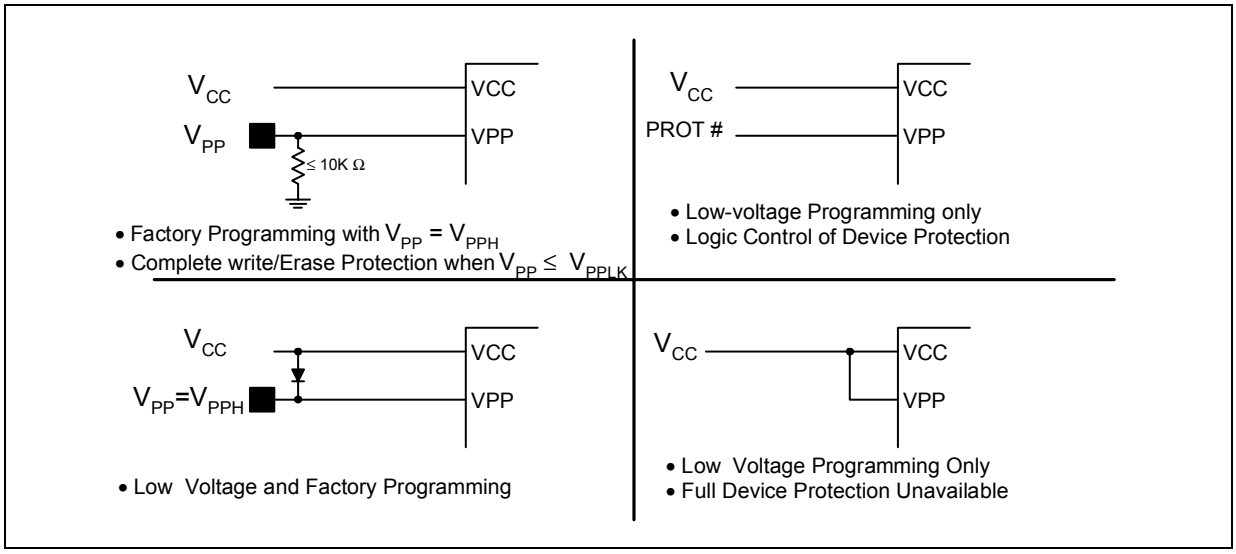

9.0 Erase Operations

Flash erasing is performed on a block basis. An entire block is erased each time an erase command sequence is issued, and only one block is erased at a time. When a block is erased, all bits within that block read as logical ones. The following sections describe block erase operations in detail.

9.1 Block Erase

Block erase operations are initiated by writing the Block Erase Setup command to the address of the block to be erased (see Section 6.0, "Command Set" on page 24). Next, the Block Erase Confirm command is written to the address of the block to be erased. If the device is placed in standby (CE# deasserted) during an erase operation, the device completes the erase operation before entering standby. V_{PP} must be above V_{PPLK} and the block must be unlocked (see Figure 38, "Block Erase Flowchart" on page 84).

During a block erase, the Write State Machine (WSM) executes a sequence of internally-timed events that conditions, erases, and verifies all bits within the block. Erasing the flash memory array changes "zeros" to "ones". Memory array bits that are ones can be changed to zeros only by programming the block (see Section 8.0, "Program Operation" on page 29).

The Status Register can be examined for block erase progress and errors by reading any address. The device remains in the Read Status Register state until another command is written. SR[0] indicates whether the addressed block is erasing. Status Register bit SR[7] is set upon erase completion.

Status Register bit SR[7] indicates block erase status while the sequence executes. When the erase operation has finished, Status Register bit SR[5] indicates an erase failure if set. SR[3] set would indicate that the WSM could not perform the erase operation because V_{PP} was outside of its acceptable limits. SR[1] set indicates that the erase operation attempted to erase a locked block, causing the operation to abort.

Before issuing a new command, the Status Register contents should be examined and then cleared using the Clear Status Register command. Any valid command can follow once the block erase operation has completed.

9.2 Erase Suspend

Issuing the Erase Suspend command while erasing suspends the block erase operation. This allows data to be accessed from memory locations other than the one being erased. The Erase Suspend command can be issued to any device address. A block erase operation can be suspended to perform a word or buffer program operation, or a read operation within any block except the block that is erase suspended (see Figure 35, "Program Suspend/Resume Flowchart" on page 81).

When a block erase operation is executing, issuing the Erase Suspend command requests the WSM to suspend the erase algorithm at predetermined points. The device continues to output Status Register data after the Erase Suspend command is issued. Block erase is suspended when Status Register bits SR[7,6] are set. Suspend latency is specified in Section 16.0, "Program and Erase Characteristics" on page 67.

To read data from the device (other than an erase-suspended block), the Read Array command must be issued. During Erase Suspend, a Program command can be issued to any block other than the erase-suspended block. Block erase cannot resume until program operations initiated during erase suspend complete. Read Array, Read Status Register, Read Device Identifier, Read CFI, and Erase Resume are valid commands

during Erase Suspend. Additionally, Clear Status Register, Program, Program Suspend, Block Lock, Block Unlock, and Block Lock-Down are valid commands during Erase Suspend.

During an erase suspend, deasserting CE# places the device in standby, reducing active current. V_{PP} must remain at a valid level, and WP# must remain unchanged while in erase suspend. If RST# is asserted, the device is reset.

9.3 Erase Resume

The Erase Resume command instructs the device to continue erasing, and automatically clears status register bits SR[7,6]. This command can be written to any address. If status register error bits are set, the Status Register should be cleared before issuing the next instruction. RST# must remain deasserted (see Figure 35, “Program Suspend/Resume Flowchart” on page 81).

9.4 Erase Protection

When $V_{PP} = V_{IL}$, absolute hardware erase protection is provided for all device blocks. If V_{PP} is below V_{PPLK}, erase operations halt and SR[3] is set indicating a V_{PP}-level error.

10.0 Security Modes

The device features security modes used to protect the information stored in the flash memory array. The following sections describe each security mode in detail.

10.1 Block Locking

Individual instant block locking is used to protect user code and/or data within the flash memory array. All blocks power up in a locked state to protect array data from being altered during power transitions. Any block can be locked or unlocked with no latency. Locked blocks cannot be programmed or erased; they can only be read.

Software-controlled security is implemented using the Block Lock and Block Unlock commands. Hardware-controlled security can be implemented using the Block Lock-Down command along with asserting WP#. Also, V_{PP} data security can be used to inhibit program and erase operations (see Section 8.7, "Program Protection" on page 34 and Section 9.4, "Erase Protection" on page 36).

The P30 device also offers four pre-defined areas in the main array that can be configured as One-Time Programmable (OTP) for the highest level of security. These include the four 32 KB parameter blocks together as one and the three adjacent 128 KB main blocks. This is available for top or bottom parameter devices.

10.1.1 Lock Block

To lock a block, issue the Lock Block Setup command. The next command must be the Lock Block command issued to the desired block's address (see Section 6.0, "Command Set" on page 24 and Figure 40, "Block Lock Operations Flowchart" on page 86). If the Set Read Configuration Register command is issued after the Block Lock Setup command, the device configures the RCR instead.

Block lock and unlock operations are not affected by the voltage level on V_{PP}. The block lock bits may be modified and/or read even if V_{PP} is at or below V_{PPLK}.

10.1.2 Unlock Block

The Unlock Block command is used to unlock blocks (see Section 6.0, "Command Set" on page 24). Unlocked blocks can be read, programmed, and erased. Unlocked blocks return to a locked state when the device is reset or powered down. If a block is in a lock-down state, WP# must be deasserted before it can be unlocked (see Figure 12, "Block Locking State Diagram" on page 38).

10.1.3 Lock-Down Block

A locked or unlocked block can be locked-down by writing the Lock-Down Block command sequence (see Section 6.0, "Command Set" on page 24). Blocks in a lock-down state cannot be programmed or erased; they can only be read. However, unlike locked blocks, their locked state cannot be changed by software commands alone. A locked-down block can only be unlocked by issuing the Unlock Block command with WP# deasserted. To return an unlocked block to locked-down state, a Lock-Down command must be issued prior to changing WP# to V_{IL}. Locked-down blocks revert to the locked state upon reset or power up the device (see Figure 12, "Block Locking State Diagram" on page 38).

10.1.4 Block Lock Status

The Read Device Identifier command is used to determine a block's lock status (see Section 12.0, "Power and Reset Specifications" on page 50). Data bits DQ[1:0] display the addressed block's lock status; DQ0 is the addressed block's lock bit, while DQ1 is the addressed block's lock-down bit.

Figure 12: Block Locking State Diagram

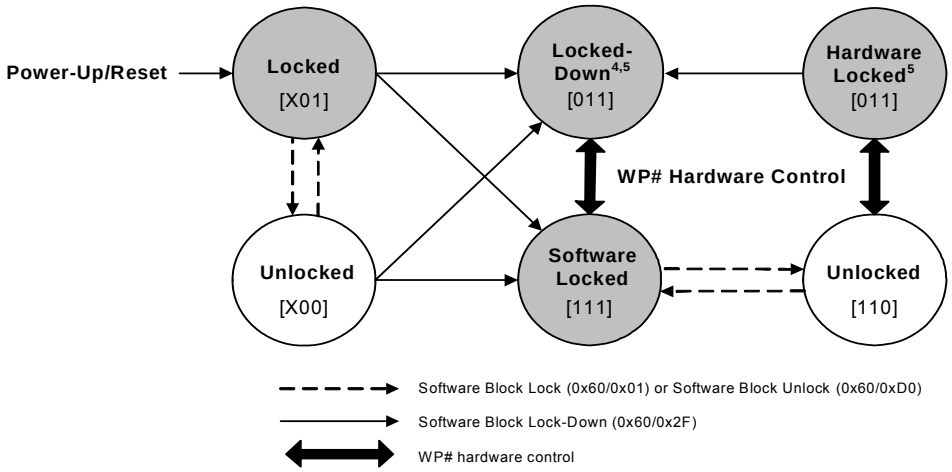

Notes:
1. [a,b,c] represents [WP#, DQ1, DQ0]. X = Don't Care.
2. DQ1 indicates Block Lock-Down status. DQ1 = '0', Lock-Down has not been issued to this block. DQ1 = '1', Lock-Down has been issued to this block.
3. DQ0 indicates block lock status. DQ0 = '0', block is unlocked. DQ0 = '1', block is locked.
4. Locked-down = Hardware + Software locked.
5. [011] states should be tracked by system software to determine difference between Hardware Locked and Locked-Down states.

10.1.5 Block Locking During Suspend

Block lock and unlock changes can be performed during an erase suspend. To change block locking during an erase operation, first issue the Erase Suspend command. Monitor the Status Register until SR[7] and SR[6] are set, indicating the device is suspended and ready to accept another command.

Next, write the desired lock command sequence to a block, which changes the lock state of that block. After completing block lock or unlock operations, resume the erase operation using the Erase Resume command.

Note: A Lock Block Setup command followed by any command other than Lock Block, Unlock Block, or Lock-Down Block produces a command sequence error and set Status Register bits SR[4] and SR[5]. If a command sequence error occurs during an erase suspend, SR[4] and SR[5] remains set, even after the erase operation is resumed. Unless the Status Register is cleared using the Clear Status Register command before resuming the erase operation, possible erase errors may be masked by the command sequence error.

If a block is locked or locked-down during an erase suspend of the *same* block, the lock status bits change immediately. However, the erase operation completes when it is resumed. Block lock operations cannot occur during a program suspend. See Appendix A, "Write State Machine" on page 87, which shows valid commands during an erase suspend.

10.2 Selectable One-Time Programmable Blocks

Any of four pre-defined areas from the main array (the four 32-KB parameter blocks together as one and three adjacent 128 KB main blocks) can be configured as OTP so further program and erase operations are not allowed. This option is available for top or bottom parameter devices.

Table 17: Selectable OTP Block Mapping

Density	Top Parameter Configuration	Bottom Parameter Configuration
256-Mbit	blocks 258:255 (parameters)	blocks 3:0 (parameters)
	block 254 (main)	block 4 (main)
	block 253 (main)	block 5 (main)
	block 252 (main)	block 6 (main)
128-Mbit	blocks 130:127 (parameters)	blocks 3:0 (parameters)
	block 126 (main)	block 4 (main)
	block 125 (main)	block 5 (main)
	block 124 (main)	block 6 (main)
64-Mbit	blocks 66:63 (parameters)	blocks 3:0 (parameters)
	block 62 (main)	block 4 (main)
	block 61 (main)	block 5 (main)
	block 60 (main)	block 6 (main)

Notes:

1. The 512-Mbit devices will have multiple die and selectable OTP areas depending on the placement of the parameter blocks.
2. When programming the OTP bits for a **Top Parameter Device**, the following upper address bits must also be driven properly: A[Max:17] driven high (V_{IH}) for TSOP and Easy BGA packages, and A[Max:16] driven high (V_{IH}) for QUAD+ SCSP.

Note: Please see your local Numonyx representative for details about the Selectable OTP implementation.

11.0 Registers

When non-array reads are performed in asynchronous page mode only the first data is valid and all subsequent data are undefined. When a non-array read operation occurs as synchronous burst mode, the same word of data requested will be output on successive clock edges until the burst length requirements are satisfied.

11.1 Read Status Register

To read the Status Register, issue the Read Status Register command at any address. Status Register information is available to which the Read Status Register, Word Program, or Block Erase command was issued. Status Register data is automatically made available following a Word Program, Block Erase, or Block Lock command sequence. Reads from the device after any of these command sequences outputs the device's status until another valid command is written (e.g. Read Array command).

The Status Register is read using single asynchronous-mode or synchronous burst mode reads. Status Register data is output on DQ[7:0], while 0x00 is output on DQ[15:8]. In asynchronous mode the falling edge of OE#, or CE# (whichever occurs first) updates and latches the Status Register contents. However, reading the Status Register in synchronous burst mode, CE# or ADV# must be toggled to update status data.

The Device Write Status bit (SR[7]) provides overall status of the device. Status register bits SR[6:1] present status and error information about the program, erase, suspend, V_{PP}, and block-locked operations.

Table 18: Status Register Description (Sheet 1 of 2)

Status Register (SR)							**Default Value = 0x80**
Device Write Status	Erase Suspend Status	Erase Status	Program Status	V_{PP} Status	Program Suspend Status	Block-Locked Status	BEFP Status
DWS	ESS	ES	PS	VPPS	PSS	BLS	BWS
7	6	5	4	3	2	1	0

Bit	Name	Description
7	Device Write Status (DWS)	0 = Device is busy; program or erase cycle in progress; SR[0] valid. 1 = Device is ready; SR[6:1] are valid.
6	Erase Suspend Status (ESS)	0 = Erase suspend not in effect. 1 = Erase suspend in effect.
5	Erase Status (ES)	0 = Erase successful. 1 = Erase fail or program sequence error when set with SR[4,7].
4	Program Status (PS)	0 = Program successful. 1 = Program fail or program sequence error when set with SR[5,7]
3	V_{PP} Status (VPPS)	0 = VPP within acceptable limits during program or erase operation. 1 = VPP < VPPLK during program or erase operation.

Table 18: Status Register Description (Sheet 2 of 2)

Status Register (SR)		Default Value = 0x80
2	Program Suspend Status (PSS)	0 = Program suspend not in effect. 1 = Program suspend in effect.
1	Block-Locked Status (BLS)	0 = Block not locked during program or erase. 1 = Block locked during program or erase; operation aborted.
0	BEFP Status (BWS)	After Buffered Enhanced Factory Programming (BEFP) data is loaded into the buffer: 0 = BEFP complete. 1 = BEFP in-progress.

Note: Always clear the Status Register prior to resuming erase operations. It avoids Status Register ambiguity when issuing commands during Erase Suspend. If a command sequence error occurs during an erase-suspend state, the Status Register contains the command sequence error status (SR[7,5,4] set). When the erase operation resumes and finishes, possible errors during the erase operation cannot be detected via the Status Register because it contains the previous error status.

11.1.1 Clear Status Register

The Clear Status Register command clears the status register. It functions independent of V_{PP}. The Write State Machine (WSM) sets and clears SR[7,6,2], but it sets bits SR[5:3,1] without clearing them. The Status Register should be cleared before starting a command sequence to avoid any ambiguity. A device reset also clears the Status Register.

11.2 Read Configuration Register

The Read Configuration Register (RCR) is used to select the read mode (synchronous or asynchronous), and it defines the synchronous burst characteristics of the device. To modify RCR settings, use the Configure Read Configuration Register command (see Section 6.0, “Command Set” on page 24).

RCR contents can be examined using the Read Device Identifier command, and then reading from offset 0x05 (see Section 12.0, “Power and Reset Specifications” on page 50).

The RCR is shown in Table 19. The following sections describe each RCR bit.

Table 19: Read Configuration Register Description (Sheet 1 of 2)

Read Configuration Register (RCR)															
Read Mode	RES	Latency Count			WAIT Polarity	Data Hold	WAIT Delay	Burst Seq	CLK Edge	RES	RES	Burst Wrap	Burst Length		
RM	R	LC[2:0]			WP	DH	WD	BS	CE	R	R	BW	BL[2:0]		
15	14	13	12	11	10	9	8	7	6	5	4	3	2	1	0

Bit	Name	Description
15	Read Mode (RM)	0 = Synchronous burst-mode read 1 = Asynchronous page-mode read (default)
14	Reserved (R)	Reserved bits should be cleared (0)

Table 19: Read Configuration Register Description (Sheet 2 of 2)

13:11	Latency Count (LC[2:0])	010 =Code 2 011 =Code 3 100 =Code 4 101 =Code 5 110 =Code 6 111 =Code 7 (default) (Other bit settings are reserved)
10	Wait Polarity (WP)	0 =WAIT signal is active low 1 =WAIT signal is active high (default)
9	Data Hold (DH)	0 =Data held for a 1-clock data cycle 1 =Data held for a 2-clock data cycle (default)
8	Wait Delay (WD)	0 =WAIT deasserted with valid data 1 =WAIT deasserted one data cycle before valid data (default)
7	Burst Sequence (BS)	0 =Reserved 1 =Linear (default)
6	Clock Edge (CE)	0 = Falling edge 1 = Rising edge (default)
5:4	Reserved (R)	Reserved bits should be cleared (0)
3	Burst Wrap (BW)	0 =Wrap; Burst accesses wrap within burst length set by BL[2:0] 1 =No Wrap; Burst accesses do not wrap within burst length (default)
2:0	Burst Length (BL[2:0])	001 =4-word burst 010 =8-word burst 011 =16-word burst 111 =Continuous-word burst (default) (Other bit settings are reserved)

Note: Latency Code 2, Data Hold for a 2-clock data cycle (DH = 1) WAIT must be deasserted with valid data (WD = 0). Latency Code 2, Data Hold for a 2-cock data cycle (DH=1) WAIT deasserted one data cycle before valid data (WD = 1) combination is not supported. Table 19, "Read Configuration Register Description" on page 41 is shown using the QUAD+ package. For EASY BGA and TSOP packages, the table reference should be adjusted using address bits A[16:1].

11.2.1 Read Mode

The Read Mode (RM) bit selects synchronous burst-mode or asynchronous page-mode operation for the device. When the RM bit is set, asynchronous page mode is selected (default). When RM is cleared, synchronous burst mode is selected.

11.2.2 Latency Count

The Latency Count (LC) bits tell the device how many clock cycles must elapse from the rising edge of ADV# (or from the first valid clock edge after ADV# is asserted) until the first valid data word is to be driven onto DQ[15:0]. The input clock frequency is used to determine this value and Figure 13 shows the data output latency for the different settings of LC. The maximum Latency Count for P30 would be Code 4 based on the Max Clock frequency specification of 52 mhz, and there will be zero WAIT States when bursting within the word line. Please also refer to "End of Word Line (EOWL) Considerations" on page 47 for more information on EOWL.

Refer to Table 20, "Latency Count (LC) and Frequency Support" on page 43 for Latency Code Settings.

Figure 13: First-Access Latency Count

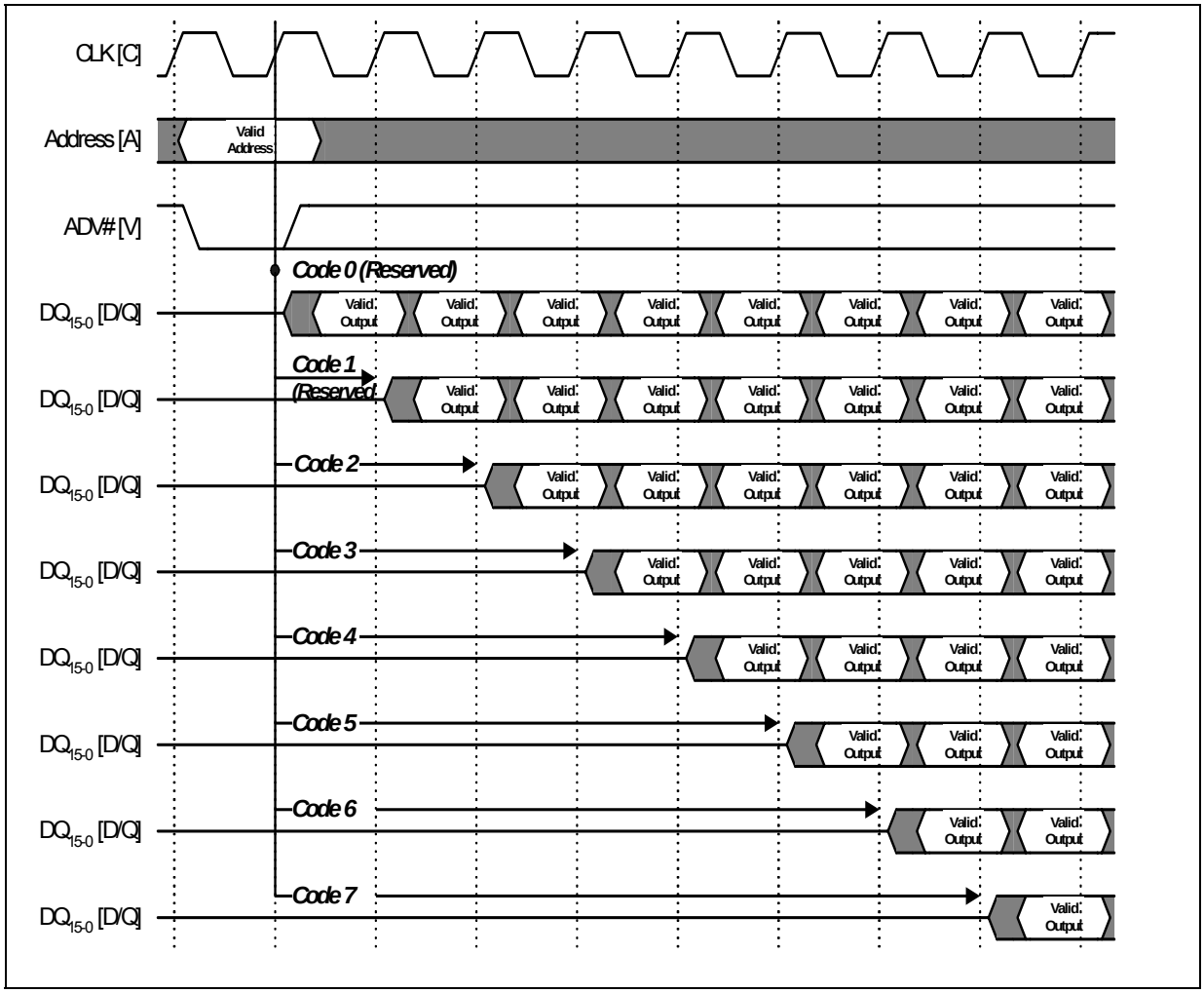

Table 20: Latency Count (LC) and Frequency Support

Latency Count Settings	Frequency Support (MHz)
2	£ 27
3	£ 40
4	£ 52

Note: Synchronous burst read operation is currently not supported for the TSOP package.

Figure 14: Example Latency Count Setting using Code 3

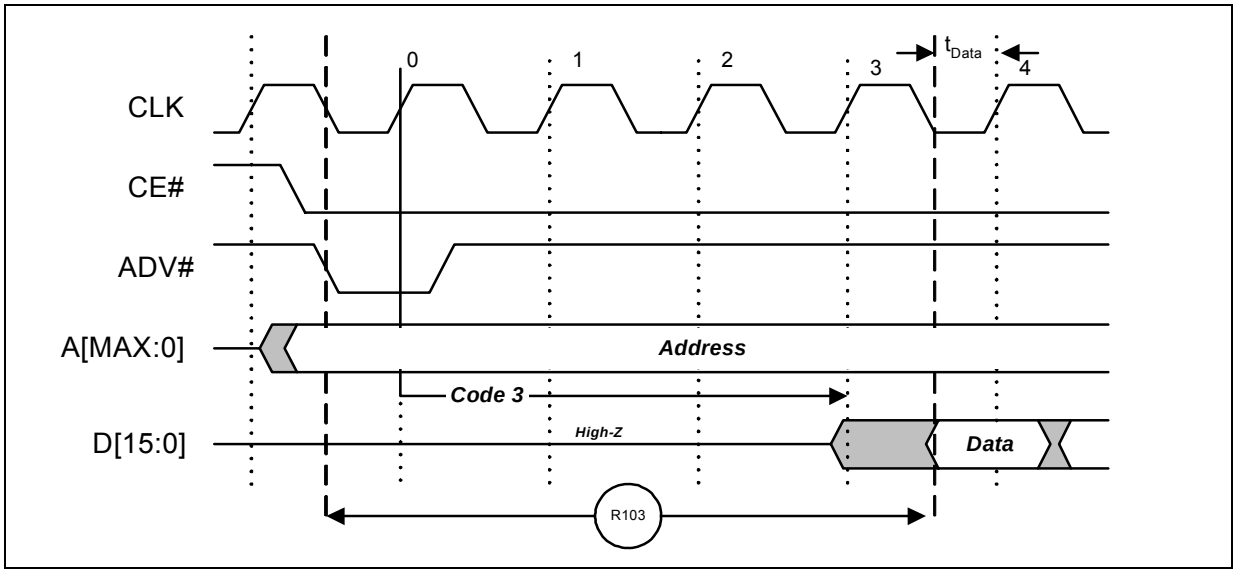

11.2.3 WAIT Polarity

The WAIT Polarity bit (WP), RCR[10] determines the asserted level (V_{OH} or V_{OL}) of WAIT. When WP is set, WAIT is asserted high (default). When WP is cleared, WAIT is asserted low. WAIT changes state on valid clock edges during active bus cycles (CE# asserted, OE# asserted, RST# deasserted).

11.2.3.1 WAIT Signal Function

The WAIT signal indicates data valid when the device is operating in synchronous mode (RCR[15]=0). The WAIT signal is only “deasserted” when data is valid on the bus.

When the device is operating in synchronous non-array read mode, such as read status, read ID, or read CFI. The WAIT signal is also “deasserted” when data is valid on the bus.

WAIT behavior during synchronous non-array reads at the end of word line works correctly only on the first data access.

When the device is operating in asynchronous page mode, asynchronous single word read mode, and all write operations, WAIT is set to a deasserted state as determined by RCR[10]. See Figure 22, “Asynchronous Single-Word Read (ADV# Latch)” on page 60, and Figure 23, “Asynchronous Page-Mode Read Timing” on page 61.

Table 21: WAIT Functionality Table (Sheet 1 of 2)

Condition	WAIT	Notes
CE# = ‘1’, OE# = ‘X’ or CE# = ‘0’, OE# = ‘1’	High-Z	1
CE# =’0’, OE# = ‘0’	Active	1
Synchronous Array Reads	Active	1
Synchronous Non-Array Reads	Active	1

Table 21: WAIT Functionality Table (Sheet 2 of 2)

Condition	WAIT	Notes
All Asynchronous Reads	Deasserted	1
All Writes	High-Z	1,2

Notes:
1. **Active:** WAIT is asserted until data becomes valid, then deasserts
2. When OE# = V_{IH} during writes, WAIT = High-Z

11.2.4 Data Hold

For burst read operations, the Data Hold (DH) bit determines whether the data output remains valid on DQ[15:0] for one or two clock cycles. This period of time is called the "**data cycle**". When DH is set, output data is held for two clocks (default). When DH is cleared, output data is held for one clock (see Figure 15). The processor's data setup time and the flash memory's clock-to-data output delay should be considered when determining whether to hold output data for one or two clocks. A method for determining the Data Hold configuration is shown below:

To set the device at one clock data hold for subsequent reads, the following condition must be satisfied:

$$\mathbf{t_{CHQV\ (ns)} + t_{DATA}\ (ns) \leq One\ CLK\ Period\ (ns)}$$

t_{DATA} = Data set up to Clock (defined by CPU)

For example, with a clock frequency of 40 MHz, the clock period is 25 ns. Assuming t_{CHQV} = 20 ns and t_{DATA} = 4 ns. Applying these values to the formula above:

$$20\ ns + 4\ ns \leq 25\ ns$$

The equation is satisfied and data will be available at every clock period with data hold setting at one clock. If $t_{CHQV\ (ns)} + t_{DATA}$ (ns) > One CLK Period (ns), data hold setting of 2 clock periods must be used.

Figure 15: Data Hold Timing

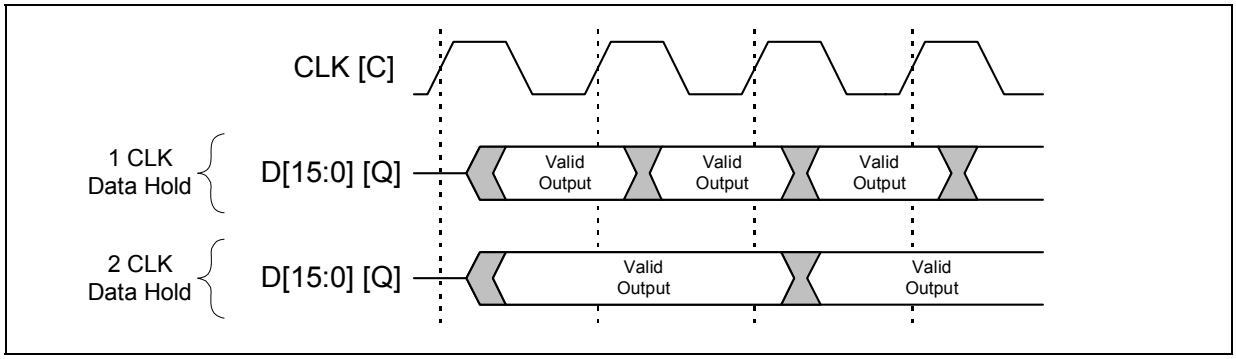

11.2.5 WAIT Delay

The WAIT Delay (WD) bit controls the WAIT assertion-delay behavior during synchronous burst reads. WAIT can be asserted either during or one data cycle before valid data is output on DQ[15:0]. When WD is set, WAIT is deasserted one data cycle *before* valid data (default). When WD is cleared, WAIT is deasserted *during* valid data.

11.2.6 Burst Sequence

The Burst Sequence (BS) bit selects linear-burst sequence (default). Only linear-burst sequence is supported. Table 22 shows the synchronous burst sequence for all burst lengths, as well as the effect of the Burst Wrap (BW) setting.

Table 22: Burst Sequence Word Ordering

Start Addr. (DEC)	Burst Wrap (RCR[3])	Burst Addressing Sequence (DEC)			
		4-Word Burst (BL[2:0] = 0b001)	8-Word Burst (BL[2:0] = 0b010)	16-Word Burst (BL[2:0] = 0b011)	Continuous Burst (BL[2:0] = 0b111)
0	0	0-1-2-3	0-1-2-3-4-5-6-7	0-1-2-3-4...14-15	0-1-2-3-4-5-6-...
1	0	1-2-3-0	1-2-3-4-5-6-7-0	1-2-3-4-5...15-0	1-2-3-4-5-6-7-...
2	0	2-3-0-1	2-3-4-5-6-7-0-1	2-3-4-5-6...15-0-1	2-3-4-5-6-7-8-...
3	0	3-0-1-2	3-4-5-6-7-0-1-2	3-4-5-6-7...15-0-1-2	3-4-5-6-7-8-9-...
4	0		4-5-6-7-0-1-2-3	4-5-6-7-8...15-0-1-2-3	4-5-6-7-8-9-10...
5	0		5-6-7-0-1-2-3-4	5-6-7-8-9...15-0-1-2-3-4	5-6-7-8-9-10-11...
6	0		6-7-0-1-2-3-4-5	6-7-8-9-10...15-0-1-2-3-4-5	6-7-8-9-10-11-12-...
7	0		7-0-1-2-3-4-5-6	7-8-9-10...15-0-1-2-3-4-5-6	7-8-9-10-11-12-13...
⋮	⋮	⋮	⋮	⋮	⋮
14	0			14-15-0-1-2...12-13	14-15-16-17-18-19-20-...
15	0			15-0-1-2-3...13-14	15-16-17-18-19-20-21-...
⋮	⋮	⋮	⋮	⋮	⋮
0	1	0-1-2-3	0-1-2-3-4-5-6-7	0-1-2-3-4...14-15	0-1-2-3-4-5-6-...
1	1	1-2-3-4	1-2-3-4-5-6-7-8	1-2-3-4-5...15-16	1-2-3-4-5-6-7-...
2	1	2-3-4-5	2-3-4-5-6-7-8-9	2-3-4-5-6...16-17	2-3-4-5-6-7-8-...
3	1	3-4-5-6	3-4-5-6-7-8-9-10	3-4-5-6-7...17-18	3-4-5-6-7-8-9-...
4	1		4-5-6-7-8-9-10-11	4-5-6-7-8...18-19	4-5-6-7-8-9-10...
5	1		5-6-7-8-9-10-11-12	5-6-7-8-9...19-20	5-6-7-8-9-10-11...
6	1		6-7-8-9-10-11-12-13	6-7-8-9-10...20-21	6-7-8-9-10-11-12-...
7	1		7-8-9-10-11-12-13-14	7-8-9-10-11...21-22	7-8-9-10-11-12-13...
⋮	⋮	⋮	⋮	⋮	⋮
14	1			14-15-16-17-18...28-29	14-15-16-17-18-19-20-...
15	1			15-16-17-18-19...29-30	15-16-17-18-19-20-21-...

11.2.7 Clock Edge

The Clock Edge (CE) bit selects either a rising (default) or falling clock edge for CLK. This clock edge is used at the start of a burst cycle, to output synchronous data, and to assert/deassert WAIT.

11.2.8 Burst Wrap

The Burst Wrap (BW) bit determines whether 4-word, 8-word, or 16-word burst length accesses wrap within the selected word-length boundaries or cross word-length boundaries. When BW is set, burst wrapping does not occur (default). When BW is cleared, burst wrapping occurs.

When performing synchronous burst reads with BW set (no wrap), an output delay may occur when the burst sequence crosses its first device-row (16-word) boundary. If the burst sequence's start address is 4-word aligned, then no delay occurs. If the start address is at the end of a 4-word boundary, the worst case output delay is one clock cycle less than the first access Latency Count. This delay can take place only once, and doesn't occur if the burst sequence does not cross a device-row boundary. WAIT informs the system of this delay when it occurs.

11.2.9 Burst Length

The Burst Length bit (BL[2:0]) selects the linear burst length for all synchronous burst reads of the flash memory array. The burst lengths are 4-word, 8-word, 16-word, and continuous word.

Continuous-burst accesses are linear only, and do not wrap within any word length boundaries (see Table 22, "Burst Sequence Word Ordering" on page 46). When a burst cycle begins, the device outputs synchronous burst data until it reaches the end of the "burstable" address space.

11.2.10 End of Word Line (EOWL) Considerations

When performing synchronous burst reads with BW set (no wrap) and DH reset (1 clock cycle), an output "delay" requiring additions clock Wait States may occur when the burst sequence crosses its first device-row (16-word) boundary. The delay would take place only once, and will not occur if the burst sequence does not cross a device-row boundary. The WAIT signal informs the system of this delay when it occurs. If the burst sequence's start address is 4-word aligned (i.e. 0x00h, 0x04h, 0x08h, 0x0Ch) then no delay occurs. If the start address is at the end of a 4-word boundary (i.e. 0x03h, 0x07h, 0x0Bh, 0x0Fh), the worst case delay (number of Wait States required) will be one clock cycle less than the first access Latency Count (LC-1) when crossing the first device-row boundary (i.e. 0x0Fh to 0x10h). Other address misalignments may require wait states depending upon the LC setting and the starting address alignment. For example, an LC setting of 3 with a starting address of 0xFD requires 0 wait states, but the same LC setting of 3 with a starting address of 0xFE would require 1 wait state when crossing the first device row boundary.

11.3 One-Time-Programmable (OTP) Registers

The device contains 17 one-time-programmable (OTP) registers that can be used to implement system security measures and/or device identification. Each OTP register can be individually locked.

The first 128-bit OTP Register is comprised of two 64-bit (8-word) segments. The lower 64-bit segment is pre-programmed at the Numonyx factory with a unique 64-bit number. The other 64-bit segment, as well as the other sixteen 128-bit OTP Registers, are blank. Users can program these registers as needed. When programmed, users can then lock the OTP Register(s) to prevent additional bit programming (see Figure 16, "OTP register map" on page 48).

The OTP Registers contain one-time programmable (OTP) bits; when programmed, PR bits cannot be erased. Each OTP Register can be accessed multiple times to program individual bits, as long as the register remains unlocked.

Each OTP Register has an associated Lock Register bit. When a Lock Register bit is programmed, the associated OTP Register can only be read; it can no longer be programmed. Additionally, because the Lock Register bits themselves are OTP, when programmed, Lock Register bits cannot be erased. Therefore, when a OTP Register is locked, it cannot be unlocked.

.

Figure 16: OTP register map

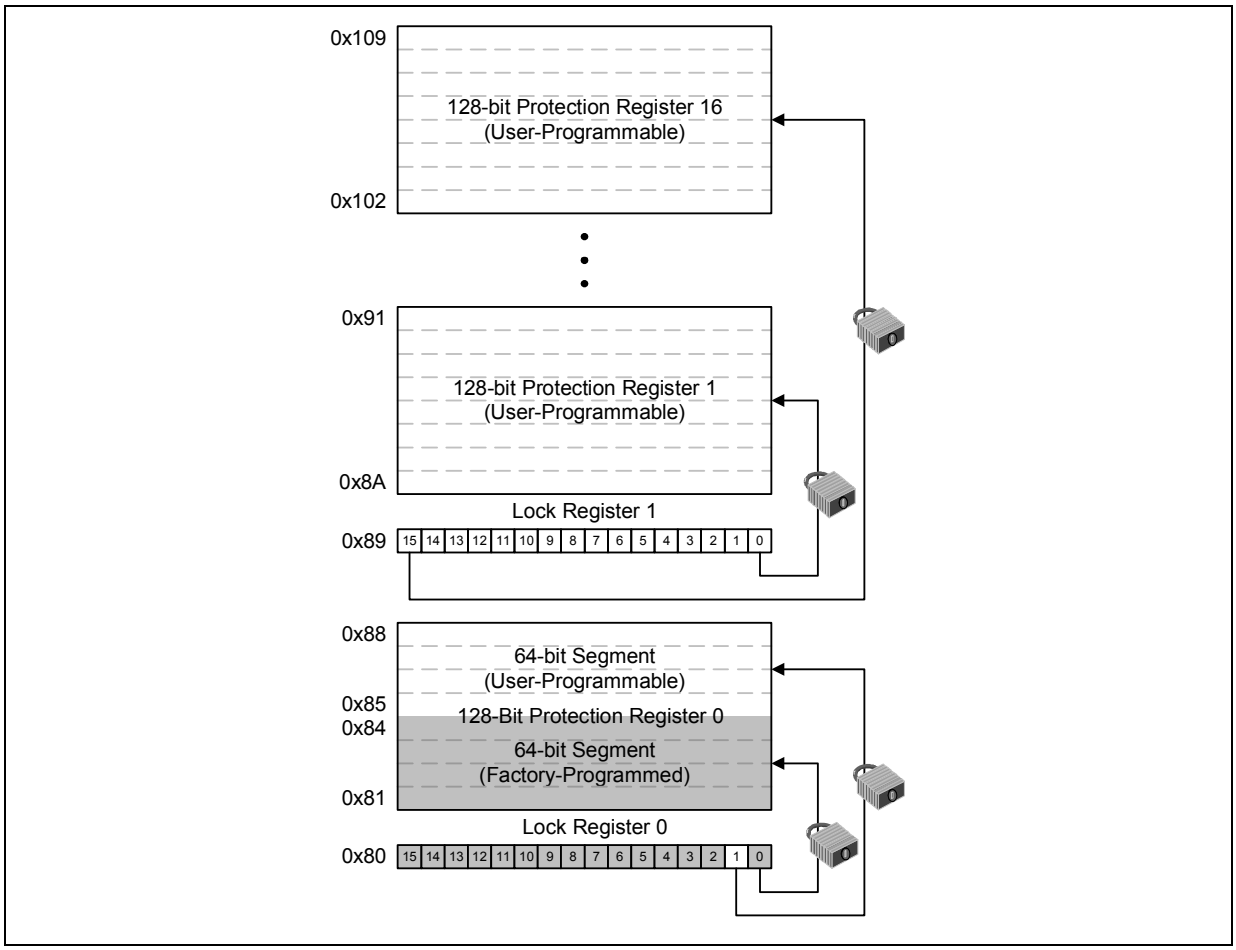

11.3.1 Reading the OTP registers

The OTP registers can be read from any address. To read the OTP Register, first issue the Read Device Identifier command at any address to place the device in the Read Device Identifier state (see Section 6.0, “Command Set” on page 24). Next, perform a read operation using the address offset corresponding to the register to be read. Table 13, “Device Identifier Information” on page 28 shows the address offsets of the OTP Registers and Lock Registers. PR data is read 16 bits at a time.

11.3.2 Programming the OTP Registers

To program any of the OTP Registers, first issue the Program OTP Register command at the parameter's base address plus the offset to the desired OTP Register (see Section 6.0, "Command Set" on page 24). Next, write the desired OTP Register data to the same OTP Register address (see Figure 16, "OTP register map" on page 48).

The device programs the 64-bit and 128-bit user-programmable OTP Register data 16 bits at a time (see Figure 41, "Protection Register Programming Flowchart" on page 87). Issuing the Program OTP Register command outside of the OTP Register's address space causes a program error (SR[4] set). Attempting to program a locked OTP Register causes a program error (SR[4] set) and a lock error (SR[1] set).

Note: When programming the OTP bits in the OTP registers for a **Top Parameter Device**, the following upper address bits must also be driven properly: A[Max:17] driven high (V_{IH}) for TSOP and Easy BGA packages, and A[Max:16] driven high (V_{IH}) for QUAD+ SCSP.

11.3.3 Locking the OTP Registers

Each OTP Register can be locked by programming its respective lock bit in the Lock Register. To lock a OTP Register, program the corresponding bit in the Lock Register by issuing the Program Lock Register command, followed by the desired Lock Register data (see Section 6.0, "Command Set" on page 24). The physical addresses of the Lock Registers are 0x80 for register 0 and 0x89 for register 1. These addresses are used when programming the lock registers (see Table 13, "Device Identifier Information" on page 28).

Bit 0 of Lock Register 0 is already programmed during the manufacturing process at the "factory", locking the lower, pre-programmed 64-bit region of the first 128-bit OTP Register containing the unique identification number of the device. Bit 1 of Lock Register 0 can be programmed by the user to lock the user-programmable, 64-bit region of the first 128-bit OTP Register. When programming Bit 1 of Lock Register 0, all other bits need to be left as '1' such that the data programmed is 0xFFFD.

Lock Register 1 controls the locking of the upper sixteen 128-bit OTP Registers. Each of the 16 bits of Lock Register 1 correspond to each of the upper sixteen 128-bit OTP Registers. Programming a bit in Lock Register 1 locks the corresponding 128-bit OTP Register.

Caution: **After being locked, the OTP Registers cannot be unlocked.**

12.0 Power and Reset Specifications

12.1 Power-Up and Power-Down

Power supply sequencing is not required if VPP is connected to VCC or VCCQ. Otherwise V_{CC} and V_{CCQ} should attain their minimum operating voltage before applying V_{PP}.

Power supply transitions should only occur when RST# is low. This protects the device from accidental programming or erasure during power transitions.

12.2 Reset Specifications

Asserting RST# during a system reset is important with automated program/erase devices because systems typically expect to read from flash memory when coming out of reset. If a CPU reset occurs without a flash memory reset, proper CPU initialization may not occur. This is because the flash memory may be providing status information, instead of array data as expected. Connect RST# to the same active low reset signal used for CPU initialization.

Also, because the device is disabled when RST# is asserted, it ignores its control inputs during power-up/down. Invalid bus conditions are masked, providing a level of memory protection.

Table 23: Reset Specifications

Num	Symbol	Parameter	Min	Max	Unit	Notes
P1	t_{PLPH}	RST# pulse width low	100	-	ns	1,2,3,4
P2	t_{PLRH}	RST# low to device reset during erase	-	25	µs	1,3,4,7
		RST# low to device reset during program	-	25		1,3,4,7
P3	t_{VCCPH}	V_{CC} Power valid to RST# de-assertion (high) 130nm	60	-		1,4,5,6
		V_{CC} Power valid to RST# de-assertion (high) 65nm	300	-		1,4,5,6

Notes:
1. These specifications are valid for all device versions (packages and speeds).
2. The device may reset if t_{PLPH} is < $t_{PLPH\ MIN}$, but this is not guaranteed.
3. Not applicable if RST# is tied to Vcc.
4. Sampled, but not 100% tested.
5. When RST# is tied to the V_{CC} supply, device will not be ready until t_{VCCPH} after $V_{CC} \geq V_{CCMIN}$.
6. When RST# is tied to the V_{CCQ} supply, device will not be ready until t_{VCCPH} after $V_{CC} \geq V_{CCMIN}$.
7. Reset completes within t_{PLPH} if RST# is asserted while no erase or program operation is executing.

Figure 17: Reset Operation Waveforms

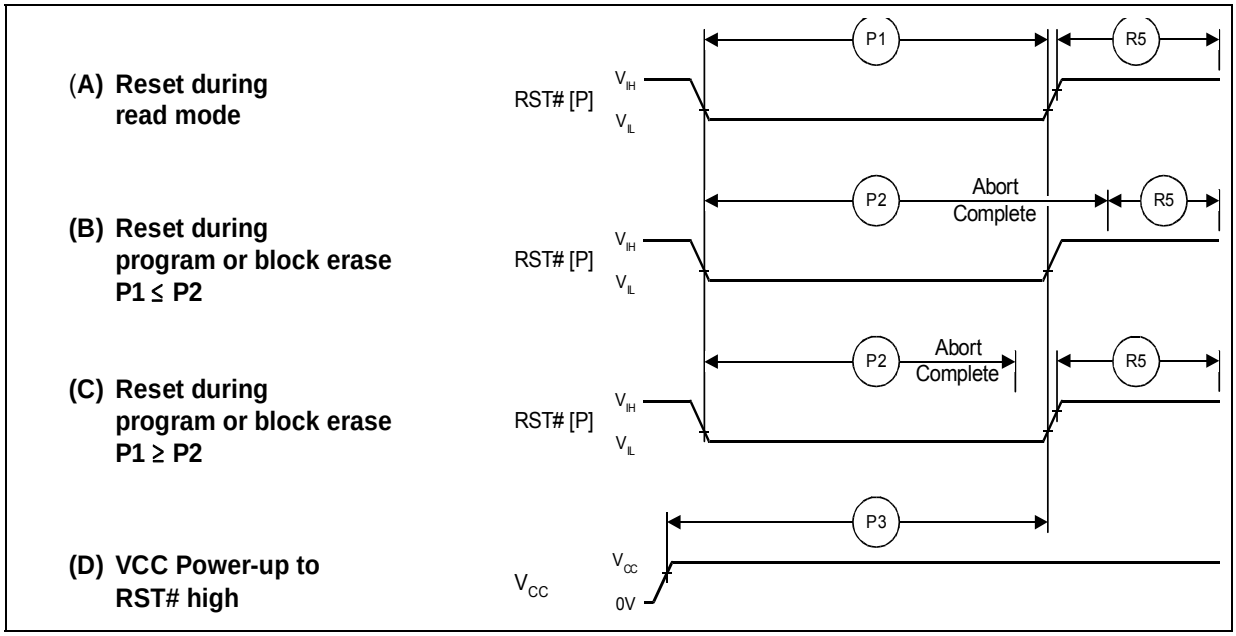

12.3 Power Supply Decoupling

Flash memory devices require careful power supply de-coupling. Three basic power supply current considerations are 1) standby current levels, 2) active current levels, and 3) transient peaks produced when CE# and OE# are asserted and deasserted.

When the device is accessed, many internal conditions change. Circuits within the device enable charge-pumps, and internal logic states change at high speed. All of these internal activities produce transient signals. Transient current magnitudes depend on the device outputs' capacitive and inductive loading. Two-line control and correct de-coupling capacitor selection suppress transient voltage peaks.

Because Numonyx Multi-Level Cell (MLC) flash memory devices draw their power from VCC, VPP, and VCCQ, each power connection should have a 0.1 µF ceramic capacitor to ground. High-frequency, inherently low-inductance capacitors should be placed as close as possible to package leads.

Additionally, for every eight devices used in the system, a 4.7 µF electrolytic capacitor should be placed between power and ground close to the devices. The bulk capacitor is meant to overcome voltage droop caused by PCB trace inductance.

13.0 Maximum Ratings and Operating Conditions

13.1 Absolute Maximum Ratings

Warning: Stressing the device beyond the "Absolute Maximum Ratings" may cause permanent damage. These are stress ratings only.

Table 24: Maximum Ratings

Parameter	Maximum Rating	Notes
Temperature under bias	–40 °C to +85 °C	
Storage temperature	–65 °C to +125 °C	
Voltage on any signal (except V_{CC}, VPP and VCCQ)	–0.5 V to +4.1 V	1
VPP voltage	–0.2 V to +10 V	1,2,3
VCC voltage	–0.2 V to +2.5 V	1
VCCQ voltage	–0.2 V to +4.1 V	1
Output short circuit current	100 mA	4

Notes:
1. Voltages shown are specified with respect to V_{SS}. Minimum DC voltage is –0.5 V on input/output signals and –0.2 V on V_{CC}, V_{CCQ}, and V_{PP}. During transitions, this level may undershoot to –2.0 V for periods less than 20 ns. Maximum DC voltage on V_{CC} is V_{CC} + 0.5 V, which, during transitions, may overshoot to V_{CC} + 2.0 V for periods less than 20 ns. Maximum DC voltage on input/output signals and V_{CCQ} is V_{CCQ} + 0.5 V, which, during transitions, may overshoot to V_{CCQ} + 2.0 V for periods less than 20 ns.
2. Maximum DC voltage on V_{PP} may overshoot to +11.5 V for periods less than 20 ns.
3. Program/erase voltage is typically 1.7 V – 2.0 V. 9.0 V can be applied for 80 hours maximum total, to any blocks for 1000 cycles maximum. 9.0 V program/erase voltage may reduce block cycling capability.
4. Output shorted for no more than one second. No more than one output shorted at a time.

13.2 Operating Conditions

Note: Operation beyond the "Operating Conditions" is not recommended and extended exposure beyond the "Operating Conditions" may affect device reliability.

Table 25: Operating Conditions

Symbol	Parameter		Min	Max	Units	Notes
T_C	Operating Temperature		–40	+85	°C	1
V_{CC}	V_{CC} Supply Voltage		1.7	2.0	V	3
V_{CCQ}	I/O Supply Voltage	CMOS inputs	1.7	3.6	V	
		TTL inputs	2.4	3.6	V	
V_{PPL}	V_{PP} Voltage Supply (Logic Level)		0.9	3.6	V	2
V_{PPH}	Factory word programming V_{PP}		8.5	9.5	V	2
t_{PPH}	Maximum V_{PP} Hours	$V_{PP} = V_{PPH}$	-	80	Hours	2
Block Erase Cycles	Main and Parameter Blocks	$V_{PP} = V_{PPL}$	100,000	-	Cycles	2
	Main Blocks	$V_{PP} = V_{PPH}$	-	1000	Cycles	2
	Parameter Blocks	$V_{PP} = V_{PPH}$	-	2500	Cycles	2

Notes:
1. T_C = Case Temperature.
2. In typical operation VPP program voltage is V_{PPL}.
3. 40Mhz burst operation on the TSOP package has a min V_{cc} value of 1.85V. Please refer to the latest Specification Update regarding synchronous burst operation with the TSOP package

14.0 Electrical Specifications

14.1 DC Current Characteristics

Table 26: DC Current Characteristics (Sheet 1 of 2)

Sym	Parameter			CMOS Inputs (V_{CCQ} = 1.7 V - 3.6 V)		TTL Inputs (V_{CCQ} = 2.4 V - 3.6 V)		Unit	Test Conditions	Notes
				Typ	Max	Typ	Max			
I_{LI}	Input Load Current			-	±1	-	±2	µA	V_{CC} = V_{CC}Max V_{CCQ} = V_{CCQ}Max V_{IN} = V_{CCQ} or V_{SS}	1
I_{LO}	Output Leakage Current	DQ[15:0], WAIT		-	±1	-	±10	µA	V_{CC} = V_{CC}Max V_{CCQ} = V_{CCQ}Max V_{IN} = V_{CCQ} or V_{SS}	1
I_{CCS}, I_{CCD}	V_{CC} Standby, Power Down		64-Mbit	20	35	20	35	µA	V_{CC} = V_{CC}Max V_{CCQ} = V_{CCQ}Max CE# = V_{CCQ} RST# = V_{CCQ} (for I_{CCS}) RST# = V_{SS} (for I_{CCD}) WP# = V_{IH}	1,2
			128-Mbit	30	75	30	75			
			256-Mbit	55	115	55	200			
			512-Mbit	110	230	110	400			
I_{CCR}	Average V_{CC} Read Current	Asynchronous Single-Word f = 5 MHz (1 CLK)		14	16	14	16	mA	1-Word Read	1
		Page-Mode Read f = 13 MHz (5 CLK)		9	10	9	10	mA	4-Word Read	
		Synchronous Burst f = 40 MHz		13	17	n/a	n/a	mA	BL = 4W	
				15	19	n/a	n/a	mA	BL = 8W	
				17	21	n/a	n/a	mA	BL = 16W	
				21	26	n/a	n/a	mA	BL = Cont.	
		Synchronous Burst f = 52MHz		16	19	n/a	n/a	mA	BL = 4W	
				19	23	n/a	n/a	mA	BL = 8W	
				22	26	n/a	n/a	mA	BL = 16W	
				23	28	n/a	n/a	mA	BL = Cont.	
									V_{CC} = V_{CC}Max CE# = V_{IL} OE# = V_{IH} Inputs: V_{IL} or V_{IH}	
I_{CCW}, I_{CCE}	V_{CC} Program Current, V_{CC} Erase Current			36	51	36	51	mA	V_{PP} = V_{PPL}, pgm/ers in progress	1,3,5
				26	33	26	33		V_{PP} = V_{PPH}, pgm/ers in progress	1,3,5
I_{CCWS}, I_{CCES}	V_{CC} Program Suspend Current, V_{CC} Erase Suspend Current		64-Mbit	20	35	20	35	µA	CE# = V_{CCQ}; suspend in progress	1,3,4
			128-Mbit	30	75	30	75			
			256-Mbit	55	115	55	200			
			512-Mbit	110	230	110	400			
I_{PPS}, I_{PPWS}, I_{PPES}	V_{PP} Standby Current, V_{PP} Program Suspend Current, V_{PP} Erase Suspend Current			0.2	5	0.2	5	µA	V_{PP} = V_{PPL}, suspend in progress	1,3
I_{PPR}	V_{PP} Read			2	15	2	15	µA	V_{PP} = V_{PPL}	1,3
I_{PPW}	V_{PP} Program Current			0.05	0.10	0.05	0.10	mA	V_{PP} = V_{PPL}, program in progress	
				8	22	8	22		V_{PP} = V_{PPH}, program in progress	

Table 26: DC Current Characteristics (Sheet 2 of 2)

Sym	Parameter	CMOS Inputs (V_{CCQ} = 1.7 V - 3.6 V)		TTL Inputs (V_{CCQ} = 2.4 V - 3.6 V)		Unit	Test Conditions	Notes
		Typ	Max	Typ	Max			
I_{PPE}	V_{PP} Erase Current	0.05	0.10	0.05	0.10	mA	V_{PP} = $V_{PPL,}$ erase in progress	
		8	22	8	22		V_{PP} = $V_{PPH,}$ erase in progress	

Notes:
1. All currents are RMS unless noted. Typical values at typical V_{CC}, T_C = +25 °C.
2. I_{CCS} is the average current measured over any 5 ms time interval 5 µs after CE# is deasserted.
3. Sampled, not 100% tested.
4. I_{CCES} is specified with the device deselected. If device is read while in erase suspend, current is I_{CCES} plus I_{CCR}.
5. I_{CCW}, I_{CCE} measured over typical or max times specified in Section 16.0, “Program and Erase Characteristics” on page 67.

14.2 DC Voltage Characteristics

Table 27: DC Voltage Characteristics

Sym	Parameter	CMOS Inputs (VCCQ = 1.7 V – 3.6 V)		TTL Inputs [1] (VCCQ = 2.4 V – 3.6 V)		Unit	Test Condition	Notes
		Min	Max	Min	Max			
V_{IL}	Input Low Voltage	0	0.4	0	0.6	V		2
V_{IH}	Input High Voltage	V_{CCQ} – 0.4 V	V_{CCQ}	2.0	V_{CCQ}	V		
V_{OL}	Output Low Voltage	-	0.1	-	0.1	V	V_{CC} = V_{CC}Min V_{CCQ} = V_{CCQ}Min I_{OL} = 100 µA	
V_{OH}	Output High Voltage	V_{CCQ} – 0.1	-	V_{CCQ} – 0.1	-	V	V_{CC} = V_{CC}Min V_{CCQ} = V_{CCQ}Min I_{OH} = –100 µA	
V_{PPLK}	V_{PP} Lock-Out Voltage	-	0.4	-	0.4	V		3
V_{LKO}	V_{CC} Lock Voltage	1.0	-	1.0	-	V		
V_{LKOQ}	V_{CCQ} Lock Voltage	0.9	-	0.9	-	V		

Notes:
1. Synchronous read mode is not supported with TTL inputs.
2. V_{IL} can undershoot to –0.4 V and V_{IH} can overshoot to V_{CCQ} + 0.4 V for durations of 20 ns or less.
3. $V_{PP} \leq V_{PPLK}$ inhibits erase and program operations. Do not use V_{PPL} and V_{PPH} outside their valid ranges.

15.0 AC Characteristics

15.1 AC Test Conditions

Figure 18: AC Input/Output Reference Waveform

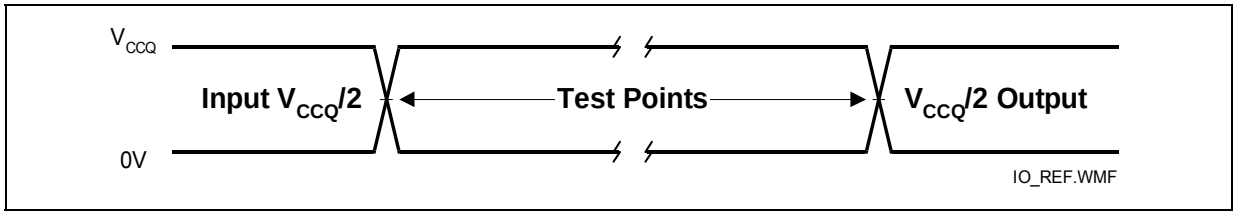

Note: AC test inputs are driven at V_{CCQ} for Logic "1" and 0 V for Logic "0." Input/output timing begins/ends at $V_{CCQ}/2$. Input rise and fall times (10% to 90%) < 5 ns. Worst case speed occurs at V_{CC} = V_{CC}Min.

Figure 19: Transient Equivalent Testing Load Circuit

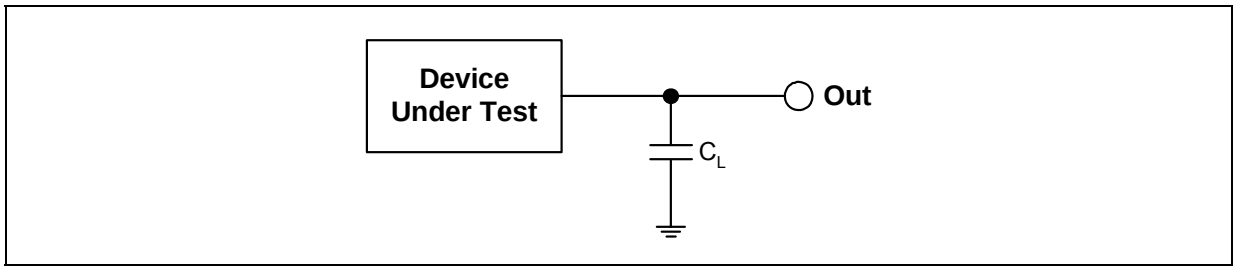

Notes:
1. See the following table for component values.
2. Test configuration component value for worst-case speed conditions.
3. C_L includes jig capacitance.

Table 28: Test Configuration Component Value For Worst Case Speed Conditions

Test Configuration	C_L (pF)
V_{CCQ}Min Standard Test	30

Figure 20: Clock Input AC Waveform

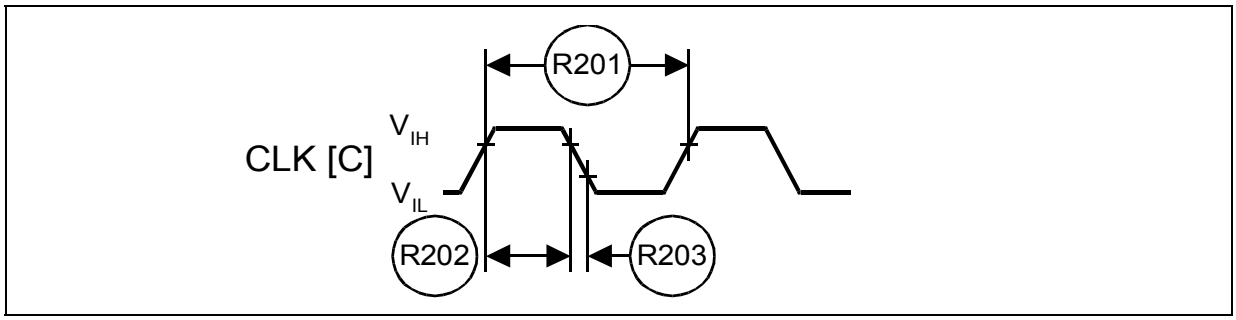

15.2 Capacitance

Table 29: Capacitance

Parameter	Signals	Min	Typ	Max	Unit	Condition	Notes
Input Capacitance	Address, Data, CE#, WE#, OE#, RST#, CLK, ADV#, WP#	2	6	7	pF	Typ temp = 25 °C, Max temp = 85 °C, V_{CC} = (0 V - 2.0 V), V_{CCQ} = (0 V - 3.6 V), Discrete silicon die	1,2,3
Output Capacitance	Data, WAIT	2	4	5	pF		

Notes:
1. Capacitance values are for a single die; for 2-die and 4-die stacks, multiply the capacitance values by the number of dies in the stack.
2. Sampled, but not 100% tested.
3. Silicon die capacitance only; add 1 pF for discrete packages.

15.3 AC Read Specifications

Table 30: AC Read Specifications for 64/128- Mbit Densities (Sheet 1 of 2)

Num	Symbol	Parameter	Min	Max	Unit	Notes
Asynchronous Specifications						
R1	t_{AVAV}	Read cycle time	85	-	ns	
R2	t_{AVQV}	Address to output valid	-	85	ns	
R3	t_{ELQV}	CE# low to output valid	-	85	ns	
R4	t_{GLQV}	OE# low to output valid	-	25	ns	1,2
R5	t_{PHQV}	RST# high to output valid	-	150	ns	1
R6	t_{ELQX}	CE# low to output in low-Z	0	-	ns	1,3
R7	t_{GLQX}	OE# low to output in low-Z	0	-	ns	1,2,3
R8	t_{EHQZ}	CE# high to output in high-Z	-	24	ns	1,3
R9	t_{GHQZ}	OE# high to output in high-Z	-	24	ns	
R10	t_{OH}	Output hold from first occurring address, CE#, or OE# change	0	-	ns	
R11	t_{EHEL}	CE# pulse width high	20	-	ns	1
R12	t_{ELTV}	CE# low to WAIT valid	-	17	ns	
R13	t_{EHTZ}	CE# high to WAIT high-Z	-	20	ns	1,3
R15	t_{GLTV}	OE# low to WAIT valid	-	17	ns	1
R16	t_{GLTX}	OE# low to WAIT in low-Z	0	-	ns	1,3
R17	t_{GHTZ}	OE# high to WAIT in high-Z	-	20	ns	
Latching Specifications						
R101	t_{AVVH}	Address setup to ADV# high	10	-	ns	1
R102	t_{ELVH}	CE# low to ADV# high	10	-	ns	
R103	t_{VLQV}	ADV# low to output valid	-	85	ns	
R104	t_{VLVH}	ADV# pulse width low	10	-	ns	
R105	t_{VHVL}	ADV# pulse width high	10	-	ns	
R106	t_{VHAX}	Address hold from ADV# high	9	-	ns	1,4

Table 30: AC Read Specifications for 64/128- Mbit Densities (Sheet 2 of 2)

Num	Symbol	Parameter		Min	Max	Unit	Notes
R108	t_{APA}	Page address access		-	25	ns	1
R111	t_{phvh}	RST# high to ADV# high		30	-	ns	
Clock Specifications							
R200	f_{CLK}	CLK frequency		-	52	MHz	1,3,5,6
			TSOP	-	40	MHz	
R201	t_{CLK}	CLK period		19.2	-	ns	
			TSOP	25	-	ns	
R202	$t_{CH/CL}$	CLK high/low time		5	-	ns	
R203	$t_{FCLK/RCLK}$	CLK fall/rise time		-	3	ns	
Synchronous Specifications(5,6)							
R301	$t_{AVCH/L}$	Address setup to CLK		9	-	ns	1
R302	$t_{VLCH/L}$	ADV# low setup to CLK		9	-	ns	
R303	$t_{ELCH/L}$	CE# low setup to CLK		9	-	ns	
R304	t_{CHQV} / tCLQV	CLK to output valid		-	17	ns	
R305	t_{CHQX}	Output hold from CLK		3	-	ns	1,7
R306	t_{CHAX}	Address hold from CLK		10	-	ns	1,4,7
R307	t_{CHTV}	CLK to WAIT valid		-	17	ns	1,7
R311	t_{CHVL}	CLK Valid to ADV# Setup		3	-	ns	1
R312	t_{CHTX}	WAIT Hold from CLK		3	-	ns	1,7

Notes:

1. See Figure 18, "AC Input/Output Reference Waveform" on page 55 for timing measurements and max allowable input slew rate.
2. OE# may be delayed by up to $t_{ELQV} - t_{GLQV}$ after CE#'s falling edge without impact to t_{ELQV}.
3. Sampled, not 100% tested.
4. Address hold in synchronous burst mode is t_{CHAX} or t_{VHAX}, whichever timing specification is satisfied first.
5. Please see the latest P30 Spec Update for synchronous burst operation with the TSOP package.
6. Synchronous read mode is not supported with TTL level inputs.
7. Applies only to subsequent synchronous reads.

Table 31: AC Read Specifications for 256/512-Mbit Densities (Sheet 1 of 3)

Num	Symbol	Parameter	Speed	Min	Max	Unit	Notes
Asynchronous Specifications							
R1	t_{AVAV}	Read cycle time	V_{CC} = 1.8 V – 2.0 V	85	-	ns	
			V_{CC} = 1.7 V – 2.0 V	88	-		
			256/512-Mb TSOP packages	95			
R2	t_{AVQV}	Address to output valid	V_{CC} = 1.8 V – 2.0 V	-	85	ns	
			V_{CC} = 1.7 V – 2.0 V	-	88		
			256/512-Mb TSOP packages	-	95		

Table 31: AC Read Specifications for 256/512-Mbit Densities (Sheet 2 of 3)

Num	Symbol	Parameter	Speed	Min	Max	Unit	Notes
R3	t_{ELQV}	CE# low to output valid	V_{CC} = 1.8 V – 2.0 V	-	85	ns	
			V_{CC} = 1.7 V – 2.0 V	-	88		
			256/512-Mb TSOP packages	-	95		
R4	t_{GLQV}	OE# low to output valid		-	25	ns	1,2
R5	t_{PHQV}	RST# high to output valid		-	150	ns	1
R6	t_{ELQX}	CE# low to output in low-Z		0	-	ns	1,3
R7	t_{GLQX}	OE# low to output in low-Z		0	-	ns	1,2,3
R8	t_{EHQZ}	CE# high to output in high-Z		-	24	ns	1,3
R9	t_{GHQZ}	OE# high to output in high-Z		-	24	ns	
R10	t_{OH}	Output hold from first occurring address, CE#, or OE# change		0	-	ns	
R11	t_{EHEL}	CE# pulse width high		20	-	ns	1
R12	t_{ELTV}	CE# low to WAIT valid		-	17	ns	
R13	t_{EHTZ}	CE# high to WAIT high-Z		-	20	ns	1,3
R15	t_{GLTV}	OE# low to WAIT valid		-	17	ns	1
R16	t_{GLTX}	OE# low to WAIT in low-Z		0	-	ns	1,3
R17	t_{GHTZ}	OE# high to WAIT in high-Z		-	20	ns	
Latching Specifications							
R101	t_{AVVH}	Address setup to ADV# high		10	-	ns	1
R102	t_{ELVH}	CE# low to ADV# high		10	-	ns	
R103	t_{VLQV}	ADV# low to output valid	V_{CC} = 1.8 V – 2.0 V	-	85	ns	
			V_{CC} = 1.7 V – 2.0 V	-	88		
			256/512-Mb TSOP packages	-	95		
R104	t_{VLVH}	ADV# pulse width low		10	-	ns	
R105	t_{VHVL}	ADV# pulse width high		10	-	ns	
R106	t_{VHAX}	Address hold from ADV# high		9	-	ns	1,4
R108	t_{APA}	Page address access		-	25	ns	1
R111	t_{phvh}	RST# high to ADV# high		30	-	ns	
Clock Specifications							
R200	f_{CLK}	CLK frequency		-	52	MHz	1,3,5,6
			TSOP Package	-	40	MHz	
R201	t_{CLK}	CLK period		19.2	-	ns	
			TSOP Package	25	-	ns	
R202	$t_{CH/CL}$	CLK high/low time		5	-	ns	
R203	$t_{FCLK/RCLK}$	CLK fall/rise time		-	3	ns	
Synchronous Specifications(5,6)							

Table 31: AC Read Specifications for 256/512-Mbit Densities (Sheet 3 of 3)

Num	Symbol	Parameter	Speed	Min	Max	Unit	Notes
R301	$t_{AVCH/L}$	Address setup to CLK		9	-	ns	1
R302	$t_{VLCH/L}$	ADV# low setup to CLK		9	-	ns	
R303	$t_{ELCH/L}$	CE# low setup to CLK		9	-	ns	
R304	t_{CHQV} / t_{CLQV}	CLK to output valid		-	17	ns	
R305	t_{CHQX}	Output hold from CLK		3	-	ns	1,7
R306	t_{CHAX}	Address hold from CLK		10	-	ns	1,4,7
R307	t_{CHTV}	CLK to WAIT valid		-	17	ns	1,7
R311	t_{CHVL}	CLK Valid to ADV# Setup		3	-	ns	1
R312	t_{CHTX}	WAIT Hold from CLK		3	-	ns	1,7

Notes:

1. See Figure 18, "AC Input/Output Reference Waveform" on page 55 for timing measurements and max allowable input slew rate.
2. OE# may be delayed by up to $t_{ELQV} - t_{GLQV}$ after CE#'s falling edge without impact to t_{ELQV}.
3. Sampled, not 100% tested.
4. Address hold in synchronous burst mode is t_{CHAX} or t_{VHAX}, whichever timing specification is satisfied first.
5. Please see the latest P30 Spec Update for synchronous burst operation with the TSOP package.
6. Synchronous read mode is not supported with TTL level inputs.
7. Applies only to subsequent synchronous reads.

Table 32: AC Read Specification differences for 65nm

Num	Symbol	Parameter		Min	Max	Unit	Notes
Asynchronous Specifications							
R1	t_{AVAV}	Read cycle time		100	-	ns	2
			TSOP	110		ns	2
R2	t_{AVQV}	Address to output valid		-	100	ns	2
			TSOP		110	ns	2
R3	t_{ELQV}	CE# low to output valid		-	100	ns	2
			TSOP		110	ns	2
R103	t_{VLQV}	ADV# low to output valid		-	100	ns	1,2
			TSOP		110	ns	2

Notes:

1. See Figure 18, "AC Input/Output Reference Waveform" on page 55 for timing measurements and max allowable input slew rate.
2. This is the recommended specification for all new designs supporting both 130nm and 65nm lithos, or for new designs that will use the 65nm lithography.

Figure 21: Asynchronous Single-Word Read (ADV# Low)

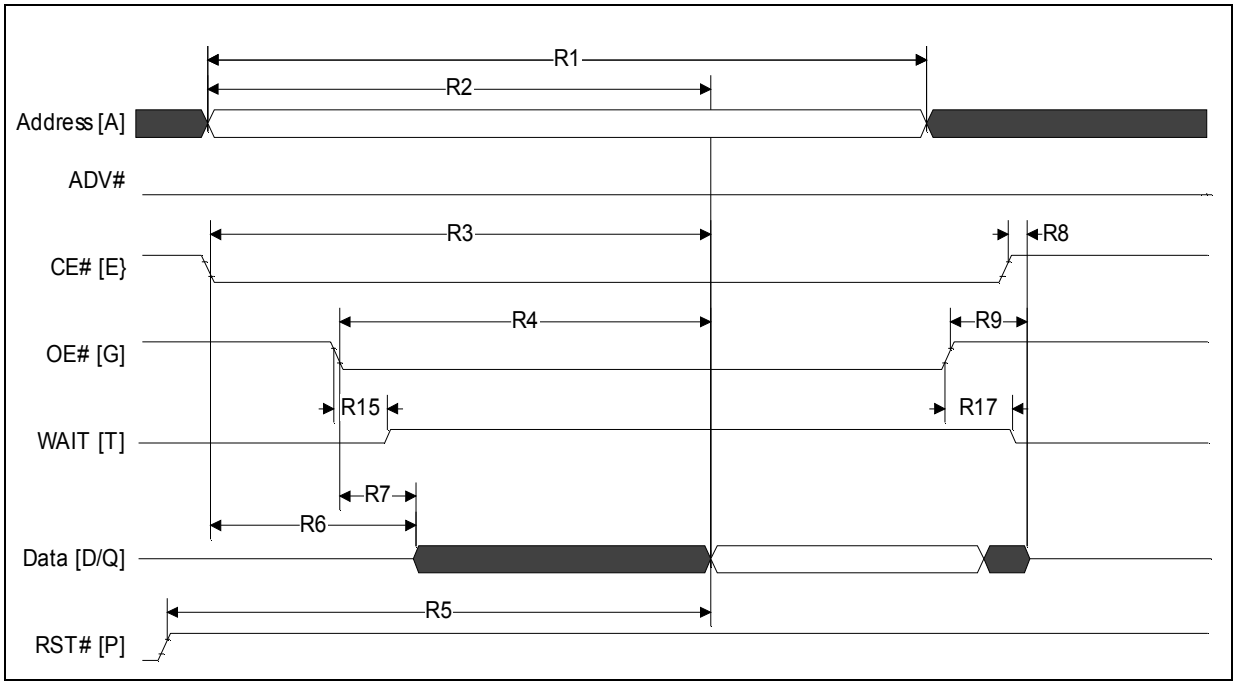

Note: WAIT shown deasserted during asynchronous read mode (RCR[10]=0, Wait asserted low).

Figure 22: Asynchronous Single-Word Read (ADV# Latch)

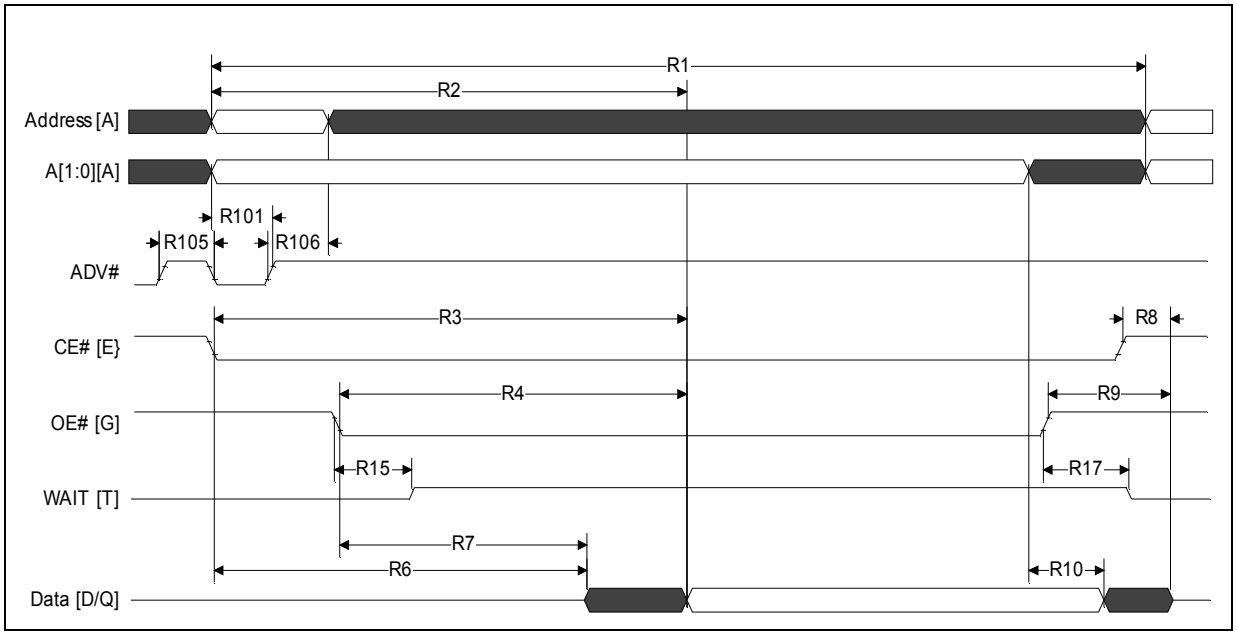

Note: WAIT shown deasserted during asynchronous read mode (RCR[10]=0, Wait asserted low).

Figure 23: Asynchronous Page-Mode Read Timing

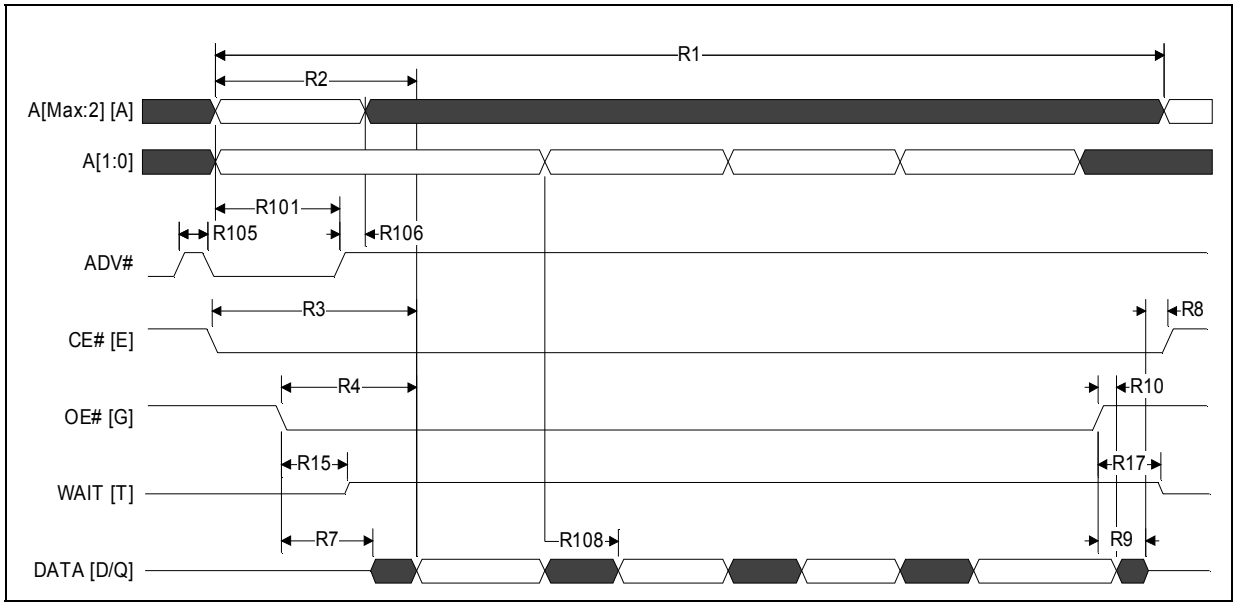

Note: WAIT shown deasserted during asynchronous read mode (RCR[10]=0, Wait asserted low).

Figure 24: Synchronous Single-Word Array or Non-array Read Timing

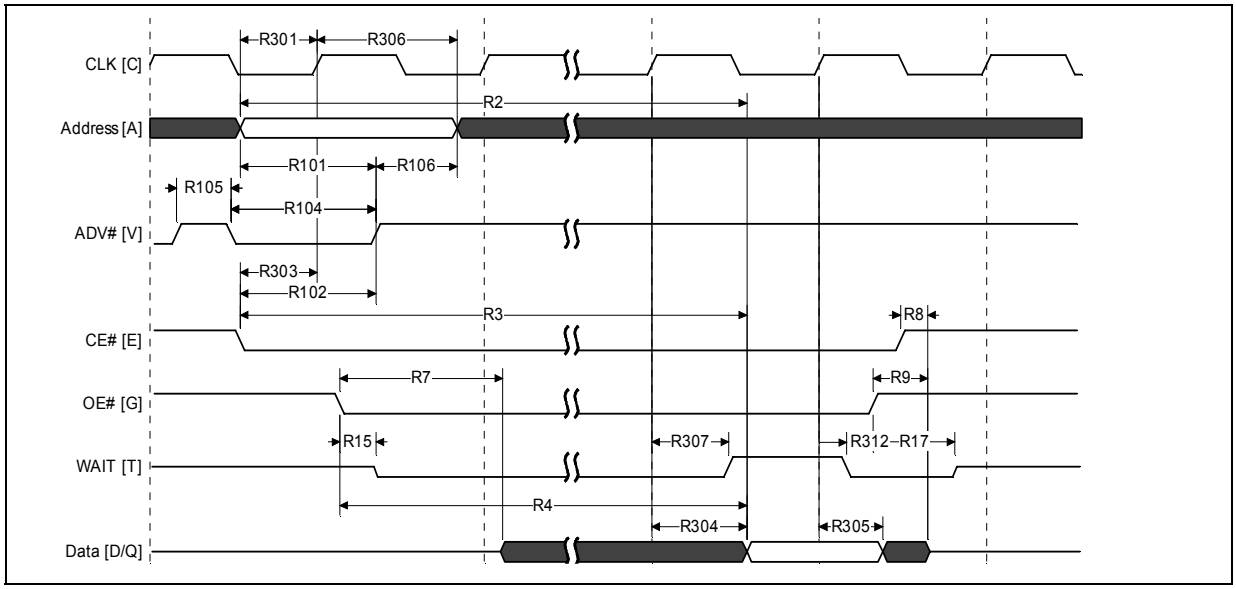

1. WAIT is driven per OE# assertion during synchronous array or non-array read, and can be configured to assert either during or one data cycle before valid data.
2. This diagram illustrates the case in which an n-word burst is initiated to the flash memory array and it is terminated by CE# deassertion after the first word in the burst.

Figure 25: Continuous Burst Read, Showing An Output Delay Timing

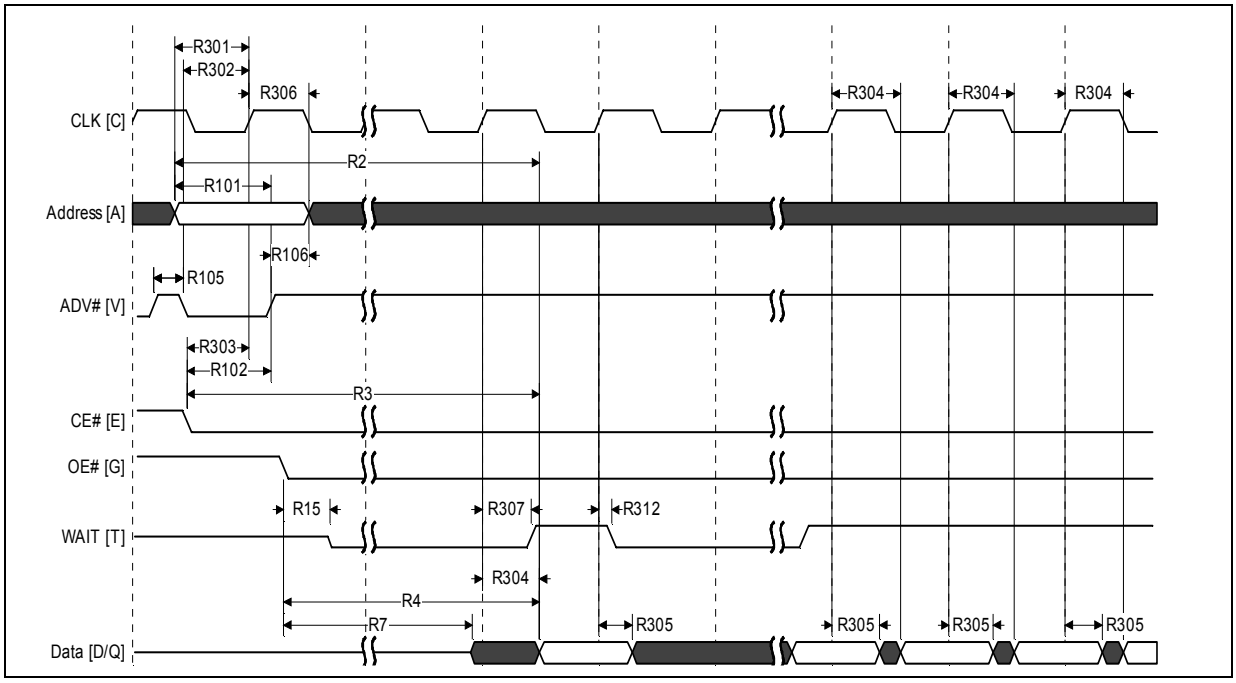

Notes:

1. WAIT is driven per OE# assertion during synchronous array or non-array read, and can be configured to assert either during or one data cycle before valid data.
2. At the end of Word Line; the delay incurred when a burst access crosses a 16-word boundary and the starting address is not 4-word boundary aligned.

Figure 26: Synchronous Burst-Mode Four-Word Read Timing

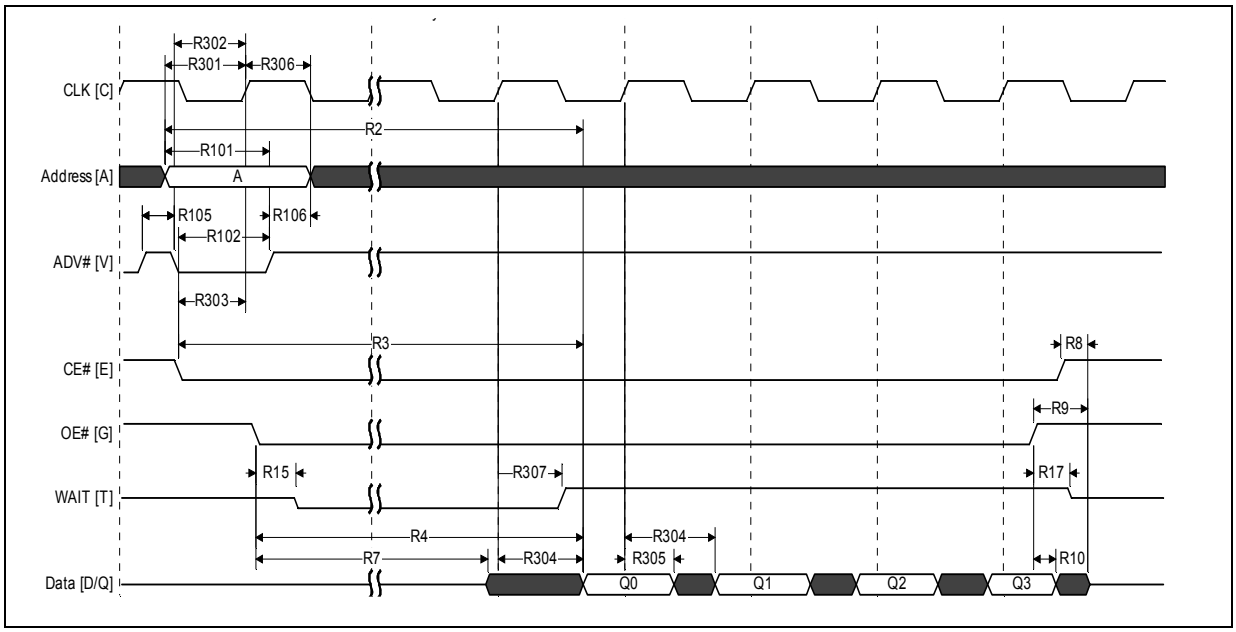

Note: WAIT is driven per OE# assertion during synchronous array or non-array read. WAIT asserted during initial latency and deasserted during valid data (RCR[10] = 0, Wait asserted low).

15.4 AC Write Specifications

Table 33: AC Write Specifications

Num	Symbol	Parameter	Min	Max	Unit	Notes
W1	t_{PHWL}	RST# high recovery to WE# low	150	-	ns	1,2,3
W2	t_{ELWL}	CE# setup to WE# low	0	-	ns	1,2,3
W3	t_{WLWH}	WE# write pulse width low	50	-	ns	1,2,4
W4	t_{DVWH}	Data setup to WE# high	50	-	ns	1,2
W5	t_{AVWH}	Address setup to WE# high	50	-	ns	
W6	t_{WHEH}	CE# hold from WE# high	0	-	ns	
W7	t_{WHDX}	Data hold from WE# high	0	-	ns	
W8	t_{WHAX}	Address hold from WE# high	0	-	ns	
W9	t_{WHWL}	WE# pulse width high	20	-	ns	1,2,5
W10	t_{VPWH}	V_{PP} setup to WE# high	200	-	ns	1,2,3,7
W11	t_{QVVL}	V_{PP} hold from Status read	0	-	ns	
W12	t_{QVBL}	WP# hold from Status read	0	-	ns	1,2,3,7
W13	t_{BHWH}	WP# setup to WE# high	200	-	ns	
W14	t_{WHGL}	WE# high to OE# low	0	-	ns	1,2,9
W16	t_{WHQV}	WE# high to read valid	t_{AVQV} + 35	-	ns	1,2,3,6,10
Write to Asynchronous Read Specifications						
W18	t_{WHAV}	WE# high to Address valid	0	-	ns	1,2,3,6,8
Write to Synchronous Read Specifications						
W19	$t_{WHCH/L}$	WE# high to Clock valid	19	-	ns	1,2,3,6,10
W20	t_{WHVH}	WE# high to ADV# high	19	-	ns	
Write Specifications with Clock Active						
W21	t_{VHWL}	ADV# high to WE# low	-	20	ns	1,2,3,11
W22	t_{CHWL}	Clock high to WE# low	-	20	ns	

Notes:

1. Write timing characteristics during erase suspend are the same as write-only operations.
2. A write operation can be terminated with either CE# or WE#.
3. Sampled, not 100% tested.
4. Write pulse width low (t_{WLWH} or t_{ELEH}) is defined from CE# or WE# low (whichever occurs last) to CE# or WE# high (whichever occurs first). Hence, $t_{WLWH} = t_{ELEH} = t_{WLEH} = t_{ELWH}$.
5. Write pulse width high (t_{WHWL} or t_{EHEL}) is defined from CE# or WE# high (whichever occurs first) to CE# or WE# low (whichever occurs last). Hence, $t_{WHWL} = t_{EHEL} = t_{WHEL} = t_{EHWL}$).
6. t_{WHVH} or $t_{WHCH/L}$ must be met when transitioning from a write cycle to a synchronous burst read.
7. V_{PP} and WP# should be at a valid level until erase or program success is determined.
8. This specification is only applicable when transitioning from a write cycle to an asynchronous read. See spec W19 and W20 for synchronous read.
9. When doing a Read Status operation following any command that alters the Status Register, W14 is 20 ns.
10. Add 10 ns if the write operation results in a RCR or block lock status change, for the subsequent read operation to reflect this change.
11. These specs are required only when the device is in a synchronous mode and clock is active during address setup phase.

Figure 27: Write-to-Write Timing

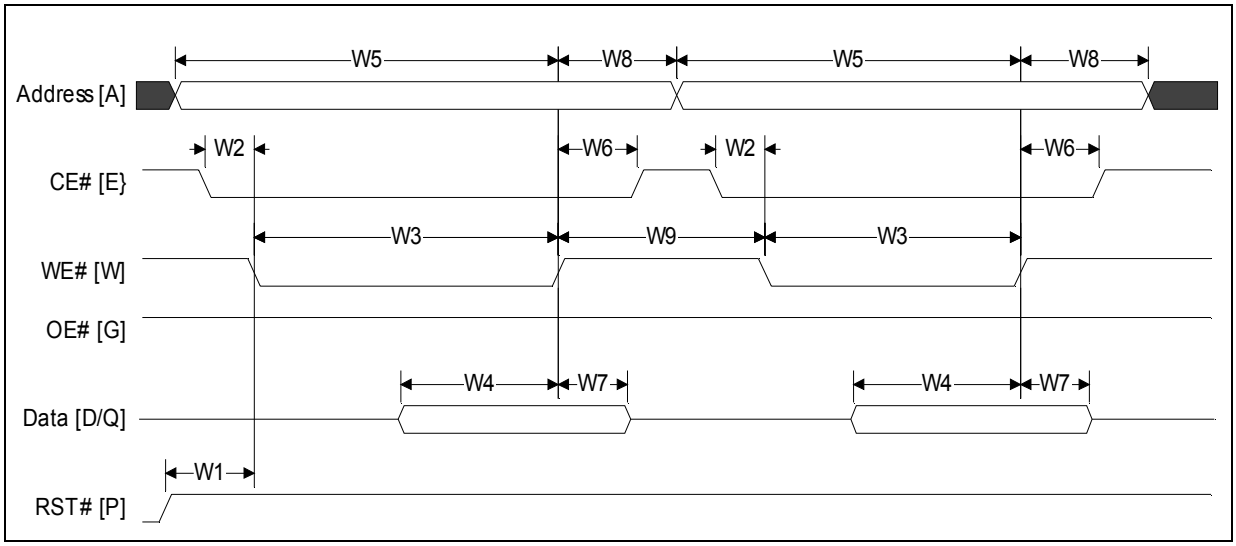

Figure 28: Asynchronous Read-to-Write Timing

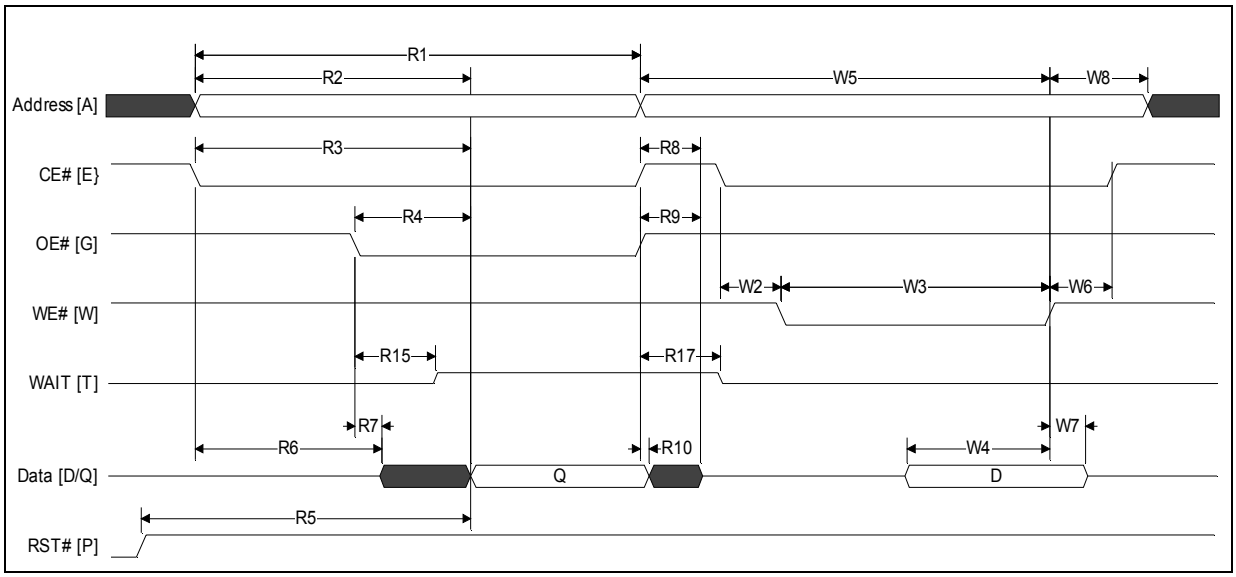

Note: WAIT deasserted during asynchronous read and during write. WAIT High-Z during write per OE# deasserted.

Figure 29: Write-to-Asynchronous Read Timing

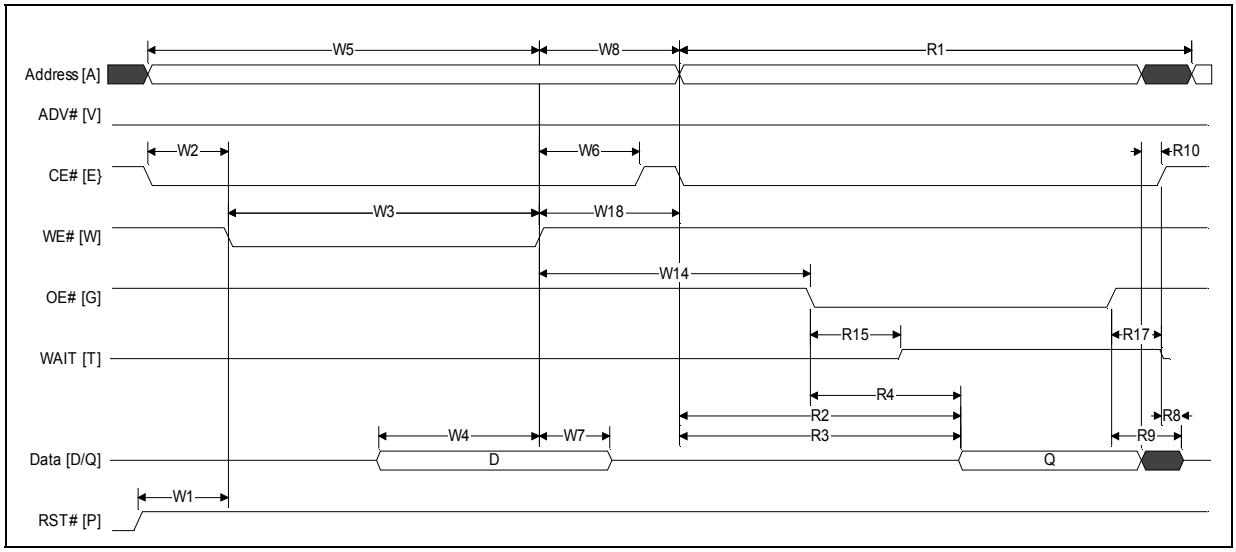

Figure 30: Synchronous Read-to-Write Timing

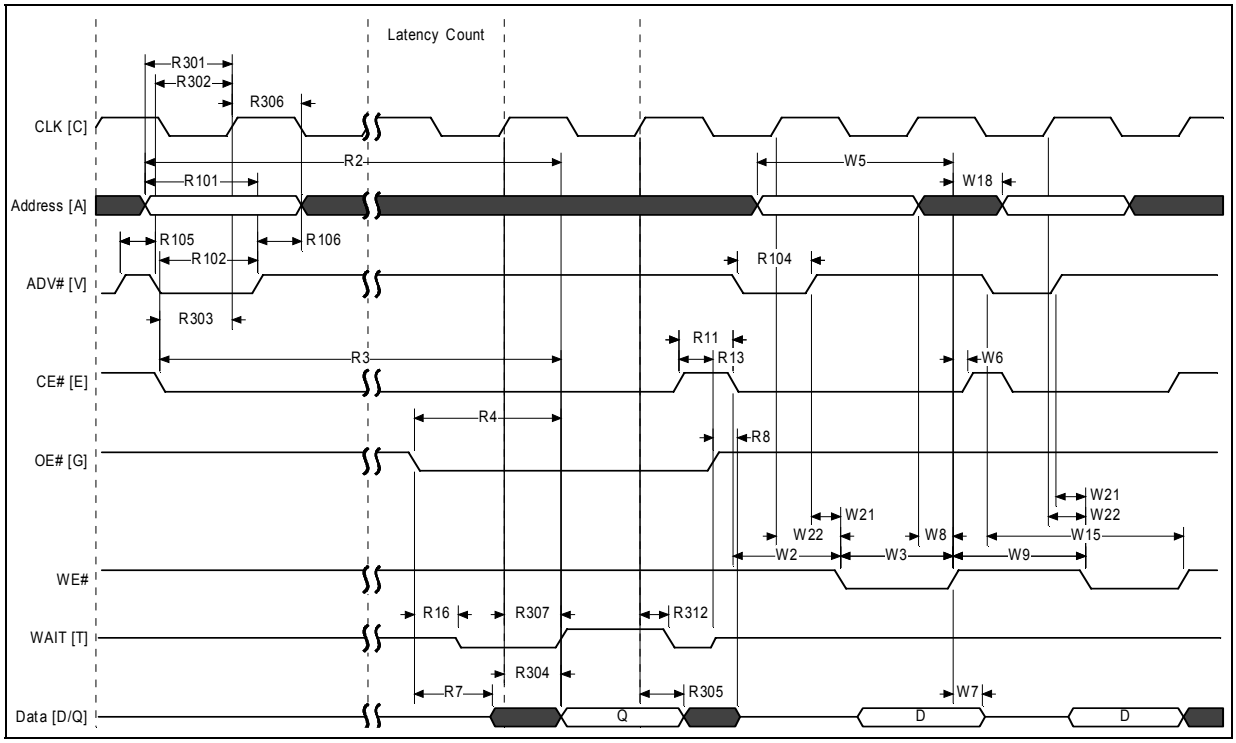

Note: WAIT shown deasserted and High-Z per OE# deassertion during write operation (RCR[10]=0, Wait asserted low). Clock is ignored during write operation.

Figure 31: Write-to-Synchronous Read Timing

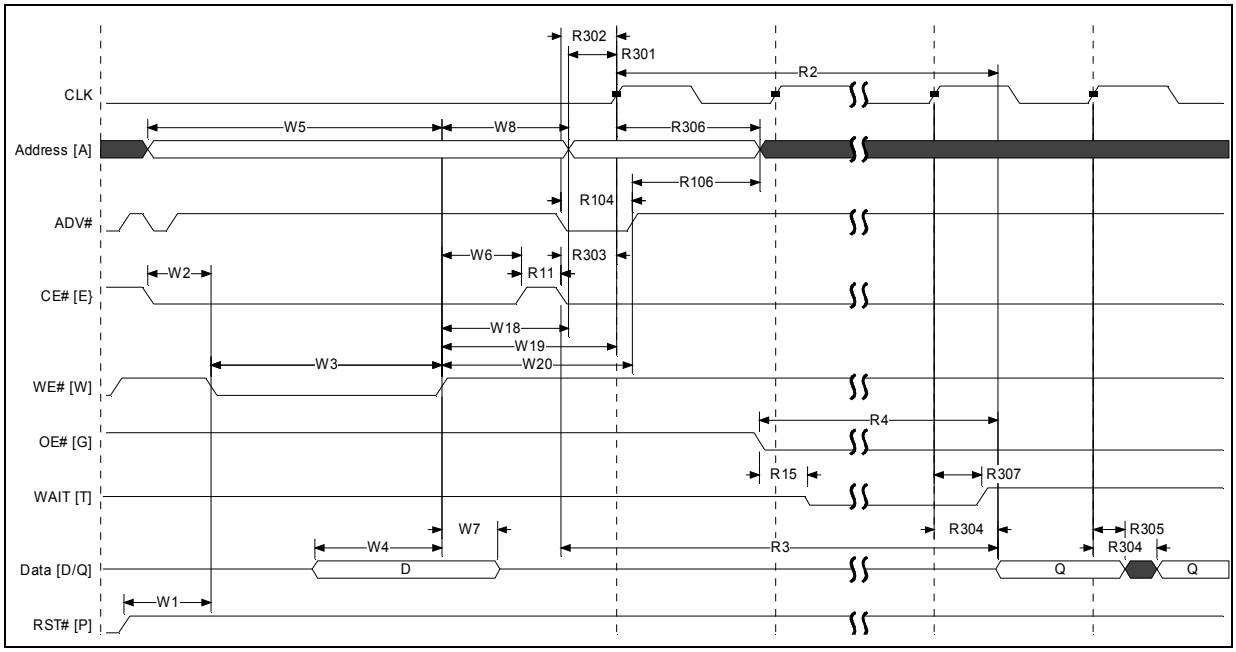

Note: WAIT shown deasserted and High-Z per OE# deassertion during write operation (RCR[10]=0, Wait asserted low).

16.0 Program and Erase Characteristics

Table 34: Program and Erase Specifications

Num	Symbol	Parameter		V_{PPL}			V_{PPH}			Units	Notes
				Min	Typ	Max	Min	Typ	Max		
Conventional Word Programming											
W200	$t_{PROG/W}$	Program Time	Single word - 130nm	-	90	200	-	85	190	µs	1
			Single word - 65nm	-	150	456	-	150	456		
			Single cell	-	30	60	-	30	60		
Buffered Programming											
W200	$t_{PROG/W}$	Program Time	Single word	-	90	200	-	85	190	µs	1
W251	t_{BUFF}		32-word buffer	-	440	880	-	340	680		
Buffered Enhanced Factory Programming											
W451	$t_{BEFP/W}$	Program	Single word	n/a	n/a	n/a	-	10	-	µs	1,2
W452	$t_{BEFP/Setup}$		BEFP Setup	n/a	n/a	n/a	5	-	-		1
Erasing and Suspending											
W500	$t_{ERS/PB}$	Erase Time	32-KByte Parameter	-	0.4	2.5	-	0.4	2.5	s	1
W501	$t_{ERS/MB}$		128-KByte Main	-	1.2	4.0	-	1.0	4.0		
W600	$t_{SUSP/P}$	Suspend Latency	Program suspend	-	20	25	-	20	25	µs	
W601	$t_{SUSP/E}$		Erase suspend	-	20	25	-	20	25		
W602	$t_{ERS/SUSP}$		Erase to Suspend	-	500	-	-	500	-		1,3

Notes:

1. Typical values measured at T_C = +25 °C and nominal voltages. Performance numbers are valid for all speed versions. Excludes system overhead. Sampled, but not 100% tested.
2. Averaged over entire device.
3. W602 is the typical time between an initial block erase or erase resume command and the a subsequent erase suspend command. Violating the specification repeatedly during any particular block erase may cause erase failures.

17.0 Ordering Information

17.1 Discrete Products

Figure 32: Decoder for Discrete P30

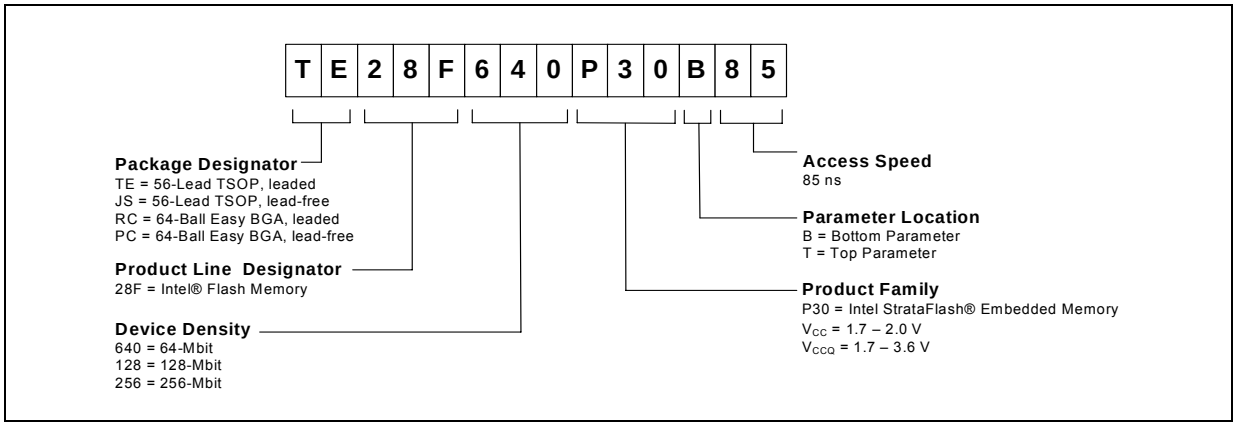

Table 35: Valid Combinations for Discrete Products

64-Mbit	128-Mbit	256-Mbit
TE28F640P30B85	TE28F128P30B85	TE28F256P30B95
TE28F640P30T85	TE28F128P30T85	TE28F256P30T95
JS28F640P30B85	JS28F128P30B85	JS28F256P30B95
JS28F640P30T85	JS28F128P30T85	JS28F256P30T95
RC28F640P30B85	RC28F128P30B85	RC28F256P30B85
RC28F640P30T85	RC28F128P30T85	RC28F256P30T85
PC28F640P30B85	PC28F128P30B85	PC28F256P30B85
PC28F640P30T85	PC28F128P30T85	PC28F256P30T85

17.2 SCSP Products

Figure 33: Decoder for SCSP P30

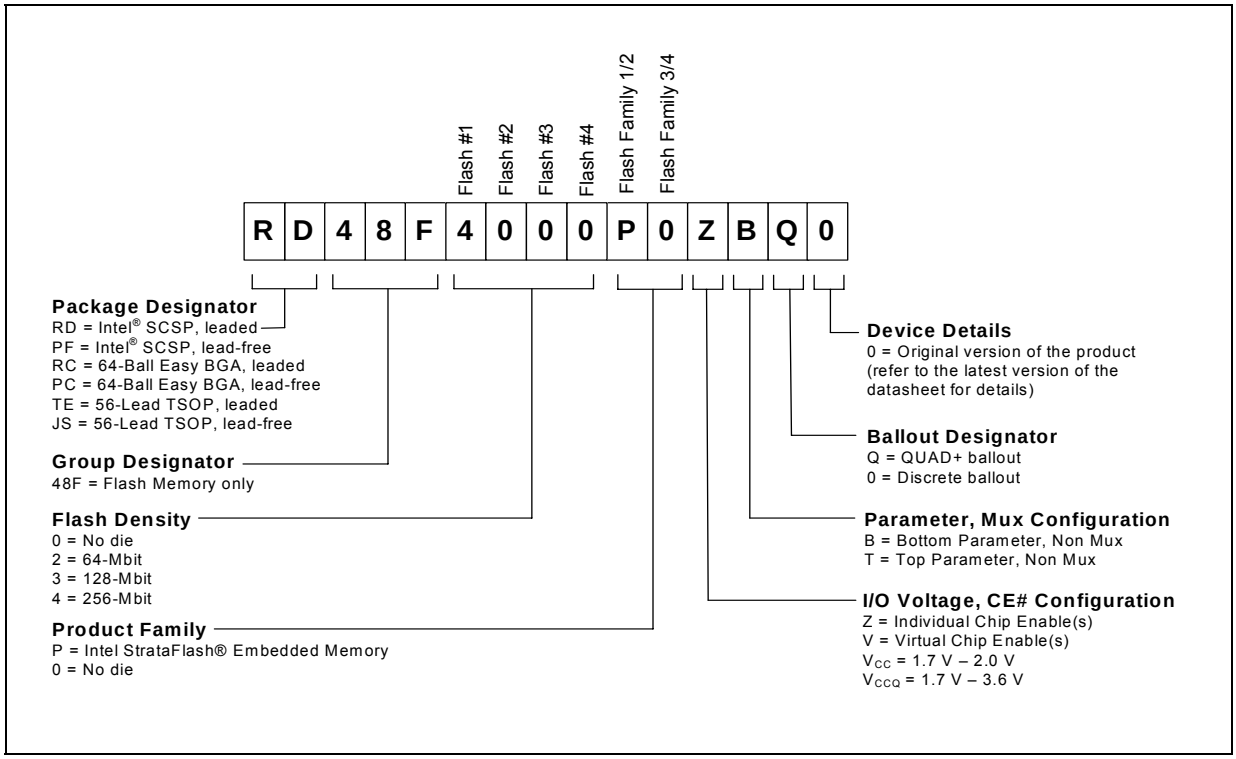

Note: For 512-Mbit only, “B” is used for both top and bottom Parameter/Mux configurations.

Table 36: Valid Combinations for Dual- Die Products

64-Mbit	128-Mbit	256-Mbit	512-Mbit*
RD48F2000P0ZBQ0	RD48F3000P0ZBQ0	RD48F4000P0ZBQ0	RD48F4400P0VBQ0
RD48F2000P0ZTQ0	RD48F3000P0ZTQ0	RD48F4000P0ZTQ0	PF48F4400P0VBQ0
PF48F2000P0ZBQ0	PF48F3000P0ZBQ0	PF48F4000P0ZBQ0	RC48F4400P0VB00
PF48F2000P0ZTQ0	PF48F3000P0ZTQ0	PF48F4000P0ZTQ0	PC48F4400P0VB00
			TE48F4400P0VB00
			JS48F4400P0VB00

Note: * The “B” parameter is used for both “top” and “bottom” options in the 512-Mbit density.

Appendix A Supplemental Reference Information

A.1 Common Flash Interface Tables

The Common Flash Interface (CFI) is part of an overall specification for multiple command-set and control-interface descriptions. This appendix describes the database structure containing the data returned by a read operation after issuing the Read CFI command (see Section 6.0, “Command Set” on page 24). System software can parse this database structure to obtain information about the flash device, such as block size, density, bus width, and electrical specifications. The system software will then know which command set(s) to use to properly perform flash writes, block erases, reads and otherwise control the flash device.

A.1.1 CFI Structure Output

The CFI database allows system software to obtain information for controlling the flash device. This section describes the device’s CFI-compliant interface that allows access to CFI data.

CFI data are presented on the lowest-order data outputs (DQ_{7-0}) only. The numerical offset value is the address relative to the maximum bus width supported by the device. On this family of devices, the CFI table device starting address is a 10h, which is a word address for x16 devices.

For a word-wide (x16) device, the first two CFI-structure bytes, ASCII “Q” and “R,” appear on the low byte at word addresses 10h and 11h. This CFI-compliant device outputs 00h data on upper bytes. The device outputs ASCII “Q” in the low byte (DQ_{7-0}) and 00h in the high byte (DQ_{15-8}).

At CFI addresses containing two or more bytes of information, the least significant data byte is presented at the lower address, and the most significant data byte is presented at the higher address.

In all of the following tables, addresses and data are represented in hexadecimal notation, so the “h” suffix has been dropped. In addition, since the upper byte of word-wide devices is always “00h,” the leading “00” has been dropped from the table notation and only the lower byte value is shown. Any x16 device outputs can be assumed to have 00h on the upper byte in this mode.

Table 37: Summary of CFI Structure Output as a Function of Device and Mode

Device	Hex Offset	Hex Code	ASCII Value
Device Addresses	00010:	51	"Q"
	00011:	52	"R"
	00012:	59	"Y"

Table 38: Example of CFI Structure Output of x16- Devices

Word Addressing:			Byte Addressing:		
Offset	**Hex Code**	**Value**	**Offset**	**Hex Code**	**Value**
A_X–A_0	D_{15}–D_0		A_X–A_0	D_7–D_0	
00010h	0051	"Q"	00010h	51	"Q"
00011h	0052	"R"	00011h	52	"R"
00012h	0059	"Y"	00012h	59	"Y"
00013h	P_ID_{LO}	PrVendor	00013h	P_ID_{LO}	PrVendor
00014h	P_ID_{HI}	ID #	00014h	P_ID_{LO}	ID #
00015h	P_{LO}	PrVendor	00015h	P_ID_{HI}	ID #
00016h	P_{HI}	TblAdr	00016h	...	...
00017h	A_ID_{LO}	AltVendor	00017h		
00018h	A_ID_{HI}	ID #	00018h		
...	...	...	...		

A.1.2 CFI Structure Overview

The CFI command causes the flash component to display the Common Flash Interface (CFI) CFI structure or "database." The structure sub-sections and address locations are summarized below.

Table 39: CFI Structure

Offset	Sub-Section Name	Description[(1)]
00001-Fh	Reserved	Reserved for vendor-specific information
00010h	CFI query identification string	Command set ID and vendor data offset
0001Bh	System interface information	Device timing & voltage information
00027h	Device geometry definition	Flash device layout
P[(3)]	Primary Intel-specific Extended Query Table	Vendor-defined additional information specific to the Primary Vendor Algorithm

Notes:
1. Refer to the CFI Structure Output section and offset 28h for the detailed definition of offset address as a function of device bus width and mode.
2. BA = Block Address beginning location (i.e., 08000h is block 1's beginning location when the block size is 32-KWord).
3. Offset 15 defines "P" which points to the Primary Numonyx-specific Extended CFI Table.

A.1.3 Read CFI Identification String

The Identification String provides verification that the component supports the Common Flash Interface specification. It also indicates the specification version and supported vendor-specified command set(s).

Table 40: CFI Identification

Offset	Length	Description	Add.	Hex Code	Value
10h	3	Query-unique ASCII string "QRY"	10: 11: 12:	--51 --52 --59	"Q" "R" "Y"
13h	2	Primary vendor command set and control interface ID code. 16-bit ID code for vendor-specified algorithms	13: 14:	--01 --00	
15h	2	Extended Query Table primary algorithm address	15: 16:	--0A --01	
17h	2	Alternate vendor command set and control interface ID code. 0000h means no second vendor-specified algorithm exists	17: 18:	--00 --00	
19h	2	Secondary algorithm Extended Query Table address. 0000h means none exists	19: 1A:	--00 --00	

Table 41: System Interface Information

Offset	Length	Description	Add.	Hex Code	Value
1Bh	1	V_{CC} logic supply minimum program/erase voltage bits 0–3 BCD 100 mV bits 4–7 BCD volts	1B:	--17	1.7V
1Ch	1	V_{CC} logic supply maximum program/erase voltage bits 0–3 BCD 100 mV bits 4–7 BCD volts	1C:	--20	2.0V
1Dh	1	V_{PP} [programming] supply minimum program/erase voltage bits 0–3 BCD 100 mV bits 4–7 HEX volts	1D:	--85	8.5V
1Eh	1	V_{PP} [programming] supply maximum program/erase voltage bits 0–3 BCD 100 mV bits 4–7 HEX volts	1E:	--95	9.5V
1Fh	1	“n” such that typical single word program time-out = 2^n µ-sec	1F:	--08	256µs
20h	1	“n” such that typical max. buffer write time-out = 2^n µ-sec	20:	--09	512µs
21h	1	“n” such that typical block erase time-out = 2^n m-sec	21:	--0A	1s
22h	1	“n” such that typical full chip erase time-out = 2^n m-sec	22:	--00	NA
23h	1	“n” such that maximum word program time-out = 2^n times typical	23:	--01	512µs
24h	1	“n” such that maximum buffer write time-out = 2^n times typical	24:	--01	1024µs
25h	1	“n” such that maximum block erase time-out = 2^n times typical	25:	--02	4s
26h	1	“n” such that maximum chip erase time-out = 2^n times typical	26:	--00	NA

A.1.4 Device Geometry Definition

Table 42: Device Geometry Definition

Offset	Length	Description	Code		
27h	1	"n" such that device size = 2^n in number of bytes	27:	See table below	
28h	2	Flash device interface code assignment: "n" such that n+1 specifies the bit field that represents the flash device width capabilities as described in the table: 7 6 5 4 3 2 1 0 — — — — x64 x32 x16 x8 15 14 13 12 11 10 9 8 — — — — — — — —	28: 29:	--01 --00	x16
2Ah	2	"n" such that maximum number of bytes in write buffer = 2^n	2A: 2B:	--06 --00	64
2Ch	1	Number of erase block regions (x) within device: 1. x = 0 means no erase blocking; the device erases in bulk 2. x specifies the number of device regions with one or more contiguous same-size erase blocks. 3. Symmetrically blocked partitions have one blocking region	2C:	See table below	
2Dh	4	Erase Block Region 1 Information bits 0–15 = y, y+1 = number of identical-size erase blocks bits 16–31 = z, region erase block(s) size are z x 256 bytes	2D: 2E: 2F: 30:	See table below	
31h	4	Erase Block Region 2 Information bits 0–15 = y, y+1 = number of identical-size erase blocks bits 16–31 = z, region erase block(s) size are z x 256 bytes	31: 32: 33: 34:	See table below	
35h	4	Reserved for future erase block region information	35: 36: 37: 38:	See table below	

Address	64-Mbit		128-Mbit		256-Mbit	
	–B	–T	–B	–T	–B	–T
27:	--17	--17	--18	--18	--19	--19
28:	--01	--01	--01	--01	--01	--01
29:	--00	--00	--00	--00	--00	--00
2A:	--06	--06	--06	--06	--06	--06
2B:	--00	--00	--00	--00	--00	--00
2C:	--02	--02	--02	--02	--02	--02
2D:	--03	--3E	--03	--7E	--03	--FE
2E:	--00	--00	--00	--00	--00	--00
2F:	--80	--00	--80	--00	--80	--00
30:	--00	--02	--00	--02	--00	--02
31:	--3E	--03	--7E	--03	--FE	--03
32:	--00	--00	--00	--00	--00	--00
33:	--00	--80	--00	--80	--00	--80
34:	--02	--00	--02	--00	--02	--00
35:	--00	--00	--00	--00	--00	--00
36:	--00	--00	--00	--00	--00	--00
37:	--00	--00	--00	--00	--00	--00
38:	--00	--00	--00	--00	--00	--00

A.1.5 Numonyx-Specific Extended CFI Table

Table 43: Primary Vendor-Specific Extended CFI

Offset[1] P = 10Ah	Length	Description (Optional flash features and commands)	Add.	Hex Code	Value
(P+0)h	3	Primary extended query table	10A	--50	"P"
(P+1)h		Unique ASCII string "PRI"	10B:	--52	"R"
(P+2)h			10C:	--49	"I"
(P+3)h	1	Major version number, ASCII	10D:	--31	"1"
(P+4)h	1	Minor version number, ASCII	10E:	--34	"4"
(P+5)h	4	Optional feature and command support (1=yes, 0=no)	10F:	--E6	
(P+6)h		*bits 11–29 are reserved; undefined bits are "0." If bit 31 is*	110:	--01	
(P+7)h		*"1" then another 31 bit field of Optional features follows at*	111:	--00	
(P+8)h		*the end of the bit–30 field.*	112:	See table below	
		bit 0 Chip erase supported	bit 0	= 0	No
		bit 1 Suspend erase supported	bit 1	= 1	Yes
		bit 2 Suspend program supported	bit 2	= 1	Yes
		bit 3 Legacy lock/unlock supported	bit 3	= 0	No
		bit 4 Queued erase supported	bit 4	= 0	No
		bit 5 Instant individual block locking supported	bit 5	= 1	Yes
		bit 6 Protection bits supported	bit 6	= 1	Yes
		bit 7 Pagemode read supported	bit 7	= 1	Yes
		bit 8 Synchronous read supported	bit 8	= 1	Yes
		bit 9 Simultaneous operations supported	bit 9	= 0	No
		bit 10 Extended Flash Array Blocks supported	bit 10	= 0	No
		bit 30 CFI Link(s) to follow	bit 30		See table below
		bit 31 Another "Optional Features" field to follow	bit 31		
(P+9)h	1	Supported functions after suspend: read Array, Status, Query	113:	--01	
		Other supported operations are:			
		bits 1–7 reserved; undefined bits are "0"			
		bit 0 Program supported after erase suspend	bit 0	= 1	Yes
(P+A)h	2	Block status register mask	114:	--03	
(P+B)h		*bits 2–15 are Reserved; undefined bits are "0"*	115:	--00	
		bit 0 Block Lock-Bit Status register active	bit 0	= 1	Yes
		bit 1 Block Lock-Down Bit Status active	bit 1	= 1	Yes
		bit 4 EFA Block Lock-Bit Status register active	bit 4	= 0	No
		bit 5 EFA Block Lock-Down Bit Status active	bit 5	= 0	No
(P+C)h	1	V_{CC} logic supply highest performance program/erase voltage	116:	--18	1.8V
		bits 0–3 BCD value in 100 mV			
		bits 4–7 BCD value in volts			
(P+D)h	1	V_{PP} optimum program/erase supply voltage	117:	--90	9.0V
		bits 0–3 BCD value in 100 mV			
		bits 4–7 HEX value in volts			

Address	Discrete		512-Mbit			
	–B	–T	–B		–T	
	––	––	die 1 (B)	die 2 (T)	die 1 (T)	die 2 (B)
112:	--00	--00	--40	--00	--40	--00

Table 44: Protection Register Information

Offset[1] P = 10Ah	Length	Description (Optional flash features and commands)	Add.	Hex Code	Value
(P+E)h	1	Number of Protection register fields in JEDEC ID space. "00h," indicates that 256 protection fields are available	118:	--02	2
(P+F)h (P+10)h (P+11)h (P+12)h	4	Protection Field 1: Protection Description This field describes user-available One Time Programmable (OTP) Protection register bytes. Some are pre-programmed with device-unique serial numbers. Others are user programmable. Bits 0–15 point to the Protection register Lock byte, the section's first byte. The following bytes are factory pre-programmed and user-programmable. bits 0–7 = Lock/bytes Jedec-plane physical low address bits 8–15 = Lock/bytes Jedec-plane physical high address bits 16–23 = "n" such that 2^n = factory pre-programmed bytes bits 24–31 = "n" such that 2^n = user programmable bytes	119: 11A: 11B: 11C:	--80 --00 --03 --03	80h 00h 8 byte 8 byte
(P+13)h (P+14)h (P+15)h (P+16)h (P+17)h (P+18)h (P+19)h (P+1A)h (P+1B)h (P+1C)h	10	Protection Field 2: Protection Description Bits 0–31 point to the Protection register physical Lock-word address in the Jedec-plane. Following bytes are factory or user-programmable. bits 32–39 = "n" ∴ n = factory pgm'd groups (low byte) bits 40–47 = "n" ∴ n = factory pgm'd groups (high byte) bits 48–55 = "n" \ 2n = factory programmable bytes/group bits 56–63 = "n" ∴ n = user pgm'd groups (low byte) bits 64–71 = "n" ∴ n = user pgm'd groups (high byte) bits 72–79 = "n" ∴ 2^n = user programmable bytes/group	11D: 11E: 11F: 120: 121: 122: 123: 124: 125: 126:	--89 --00 --00 --00 --00 --00 --00 --10 --00 --04	89h 00h 00h 00h 0 0 0 16 0 16

Table 45: Burst Read Information

Offset[1] P = 10Ah	Length	Description (Optional flash features and commands)	Add.	Hex Code	Value
(P+1D)h	1	Page Mode Read capability bits 0–7 = "n" such that 2^n HEX value represents the number of read-page bytes. See offset 28h for device word width to determine page-mode data output width. 00h indicates no read page buffer.	127:	--03	8 byte
(P+1E)h	1	Number of synchronous mode read configuration fields that follow. 00h indicates no burst capability.	128:	--04	4
(P+1F)h	1	Synchronous mode read capability configuration 1 Bits 3–7 = Reserved bits 0–2 "n" such that 2^{n+1} HEX value represents the maximum number of continuous synchronous reads when the device is configured for its maximum word width. A value of 07h indicates that the device is capable of continuous linear bursts that will output data until the internal burst counter reaches the end of the device's burstable address space. This field's 3-bit value can be written directly to the Read Configuration Register bits 0–2 if the device is configured for its maximum word width. See offset 28h for word width to determine the burst data output width.	129:	--01	4
(P+20)h	1	Synchronous mode read capability configuration 2	12A:	--02	8
(P+21)h	1	Synchronous mode read capability configuration 3	12B:	--03	16
(P+22)h	1	Synchronous mode read capability configuration 4	12C:	--07	Cont

Table 46: Partition and Erase Block Region Information

Offset[1] P = 10Ah Bottom	Offset[1] P = 10Ah Top	Description (Optional flash features and commands)	See table below Len	Address Bot	Address Top
(P+23)h	(P+23)h	Number of device hardware-partition regions within the device. x = 0: a single hardware partition device (no fields follow). x specifies the number of device partition regions containing one or more contiguous erase block regions.	1	12D:	12D:

Table 47: Partition Region 1 Information

Offset[1] P = 10Ah Bottom	Offset[1] P = 10Ah Top	Description (Optional flash features and commands)	See table below Len	Address Bot	Address Top
(P+24)h	(P+24)h	Data size of this Parition Region Information field	2	12E:	12E
(P+25)h	(P+25)h	(# addressable locations, including this field)		12F	12F
(P+26)h	(P+26)h	Number of identical partitions within the partition region	2	130:	130:
(P+27)h	(P+27)h			131:	131:
(P+28)h	(P+28)h	Number of program or erase operations allowed in a partition bits 0–3 = number of simultaneous Program operations bits 4–7 = number of simultaneous Erase operations	1	132:	132:
(P+29)h	(P+29)h	Simultaneous program or erase operations allowed in other partitions while a partition in this region is in Program mode bits 0–3 = number of simultaneous Program operations bits 4–7 = number of simultaneous Erase operations	1	133:	133:
(P+2A)h	(P+2A)h	Simultaneous program or erase operations allowed in other partitions while a partition in this region is in Erase mode bits 0–3 = number of simultaneous Program operations bits 4–7 = number of simultaneous Erase operations	1	134:	134:
(P+2B)h	(P+2B)h	Types of erase block regions in this Partition Region. x = 0 = no erase blocking; the Partition Region erases in bulk x = number of erase block regions w/ contiguous same-size erase blocks. Symmetrically blocked partitions have one blocking region. Partition size = (Type 1 blocks)x(Type 1 block sizes) + (Type 2 blocks)x(Type 2 block sizes) +…+ (Type n blocks)x(Type n block sizes)	1	135:	135:

Table 48: Partition Region 1 Information (continued)

Offset[1] P = 10Ah Bottom	Offset[1] P = 10Ah Top	Description (Optional flash features and commands)	Len	See table below Address Bot	See table below Address Top
(P+2C)h	(P+2C)h	Partition Region 1 Erase Block Type 1 Information	4	136:	136:
(P+2D)h	(P+2D)h	bits 0–15 = y, y+1 = # identical-size erase blks in a partition		137:	137:
(P+2E)h	(P+2E)h	bits 16–31 = z, region erase block(s) size are z x 256 bytes		138:	138:
(P+2F)h	(P+2F)h			139:	139:
(P+30)h	(P+30)h	Partition 1 (Erase Block Type 1)	2	13A:	13A:
(P+31)h	(P+31)h	Block erase cycles x 1000		13B:	13B:
(P+32)h	(P+32)h	Partition 1 (erase block Type 1) bits per cell; internal EDAC bits 0–3 = bits per cell in erase region bit 4 = internal EDAC used (1=yes, 0=no) bits 5–7 = reserve for future use	1	13C:	13C:
(P+33)h	(P+33)h	Partition 1 (erase block Type 1) page mode and synchronous mode capabilities defined in Table 10. bit 0 = page-mode host reads permitted (1=yes, 0=no) bit 1 = synchronous host reads permitted (1=yes, 0=no) bit 2 = synchronous host writes permitted (1=yes, 0=no) bits 3–7 = reserved for future use	1	13D:	13D:
		Partition Region 1 (Erase Block Type 1) Programming Region Information	6		
(P+34)h	(P+34)h	bits 0–7 = x, 2^x = Programming Region aligned size (**bytes**)		13E:	13E:
(P+35)h	(P+35)h	bits 8–14 = Reserved; bit 15 = Legacy flash operation (ignore 0:7)		13F:	13F:
(P+36)h	(P+36)h	bits 16–23 = y = Control Mode **valid** size in bytes		140:	140:
(P+37)h	(P+37)h	bits 24-31 = Reserved		141:	141:
(P+38)h	(P+38)h	bits 32-39 = z = Control Mode **invalid** size in bytes		142:	142:
(P+39)h	(P+39)h	bits 40-46 = Reserved; bit 47 = Legacy flash operation (ignore 23:16 & 39:32)		143:	143:
(P+3A)h	(P+3A)h	Partition Region 1 Erase Block Type 2 Information	4	144:	144:
(P+3B)h	(P+3B)h	bits 0–15 = y, y+1 = # identical-size erase blks in a partition		145:	145:
(P+3C)h	(P+3C)h	bits 16–31 = z, region erase block(s) size are z x 256 bytes		146:	146:
(P+3D)h	(P+3D)h			147:	147:
(P+3E)h	(P+3E)h	Partition 1 (Erase Block Type 2)	2	148:	148:
(P+3F)h	(P+3F)h	Block erase cycles x 1000		149:	149:
(P+40)h	(P+40)h	Partition 1 (erase block Type 2) bits per cell; internal EDAC bits 0–3 = bits per cell in erase region bit 4 = internal EDAC used (1=yes, 0=no) bits 5–7 = reserve for future use	1	14A:	14A:
(P+41)h	(P+41)h	Partition 1 (erase block Type 2) page mode and synchronous mode capabilities defined in Table 10. bit 0 = page-mode host reads permitted (1=yes, 0=no) bit 1 = synchronous host reads permitted (1=yes, 0=no) bit 2 = synchronous host writes permitted (1=yes, 0=no) bits 3–7 = reserved for future use	1	14B:	14B:
		Partition Region 1 (Erase Block Type 2) Programming Region Information	6		
(P+42)h	(P+42)h	bits 0–7 = x, 2^x = Programming Region aligned size (**bytes**)		14C:	14C:
(P+43)h	(P+43)h	bits 8–14 = Reserved; bit 15 = Legacy flash operation (ignore 0:7)		14D:	14D:
(P+44)h	(P+44)h	bits 16–23 = y = Control Mode **valid** size in bytes		14E:	14E:
(P+45)h	(P+45)h	bits 24-31 = Reserved		14F:	14F:
(P+46)h	(P+46)h	bits 32-39 = z = Control Mode **invalid** size in bytes		150:	150:
(P+47)h	(P+47)h	bits 40-46 = Reserved; bit 47 = Legacy flash operation (ignore 23:16 & 39:32)		151:	151:

Table 49: Partition and Erase Block Region Information

Address	64-Mbit		128-Mbit		256-Mbit	
	–B	–T	–B	–T	–B	–T
12D:	--01	--01	--01	--01	--01	--01
12E:	--24	--24	--24	--24	--24	--24
12F:	--00	--00	--00	--00	--00	--00
130:	--01	--01	--01	--01	--01	--01
131:	--00	--00	--00	--00	--00	--00
132:	--11	--11	--11	--11	--11	--11
133:	--00	--00	--00	--00	--00	--00
134:	--00	--00	--00	--00	--00	--00
135:	--02	--02	--02	--02	--02	--02
136:	--03	--3E	--03	--7E	--03	--FE
137:	--00	--00	--00	--00	--00	--00
138:	--80	--00	--80	--00	--80	--00
139:	--00	--02	--00	--02	--00	--02
13A:	--64	--64	--64	--64	--64	--64
13B:	--00	--00	--00	--00	--00	--00
13C:	--02	--02	--02	--02	--02	--02
13D:	--03	--03	--03	--03	--03	--03
13E:	--00	--00	--00	--00	--00	--00
13F:	--80	--80	--80	--80	--80	--80
140:	--00	--00	--00	--00	--00	--00
141:	--00	--00	--00	--00	--00	--00
142:	--00	--00	--00	--00	--00	--00
143:	--80	--80	--80	--80	--80	--80
144:	--3E	--03	--7E	--03	--FE	--03
145:	--00	--00	--00	--00	--00	--00
146:	--00	--80	--00	--80	--00	--80
147:	--02	--00	--02	--00	--02	--00
148:	--64	--64	--64	--64	--64	--64
149:	--00	--00	--00	--00	--00	--00
14A:	--02	--02	--02	--02	--02	--02
14B:	--03	--03	--03	--03	--03	--03
14C:	--00	--00	--00	--00	--00	--00
14D:	--80	--80	--80	--80	--80	--80
14E:	--00	--00	--00	--00	--00	--00
14F:	--00	--00	--00	--00	--00	--00
150:	--00	--00	--00	--00	--00	--00
151:	--80	--80	--80	--80	--80	--80

Table 50: CFI Link Information

Offset[1] P = 10Ah	Length	Description (Optional flash features and commands)	Add.	Hex Code	Value
(P+48)h (P+49)h (P+4A)h (P+4B)h	4	CFI Link Field bit definitions Bits 0–9 = Address offset (within 32Mbit segment) of referenced CFI table Bits 10–27 = nth 32Mbit segment of referenced CFI table Bits 28–30 = Memory Type Bit 31 = Another CFI Link field immediately follows	152: 153: 154: 155:	See table below	
(P+4C)h	1	CFI Link Field Quantity Subfield definitions Bits 0–3 = Quantity field (n such that n+1 equals quantity) Bit 4 = Table & Die relative location Bit 5 = Link Field & Table relative location Bits 6–7 = Reserved	156:	See table below	

Address	Discrete		512-Mbit			
	–B	–T	–B		–T	
	—	—	die 1 (B)	die 2 (T)	die 1 (T)	die 2 (B)
152:	--FF	--FF	--10	--FF	--10	--FF
153:	--FF	--FF	--20	--FF	--20	--FF
154:	--FF	--FF	--00	--FF	--00	--FF
155:	--FF	--FF	--00	--FF	--00	--FF
156:	--FF	--FF	--10	--FF	--10	--FF

A.2 Flowcharts

Figure 34: Word Program Flowchart

WORD PROGRAM PROCEDURE

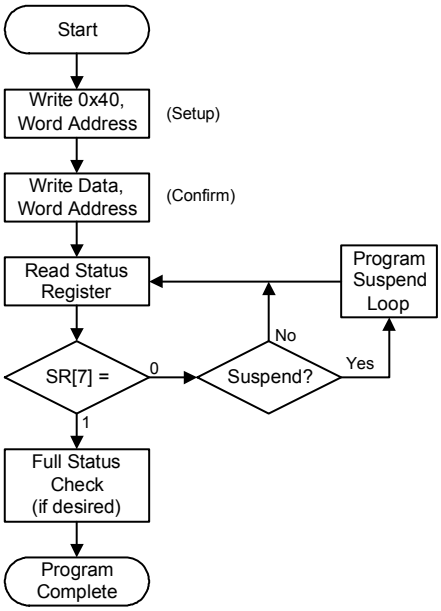

Bus Operation	Command	Comments
Write	Program Setup	Data = 0x40 Addr = Location to program
Write	Data	Data = Data to program Addr = Location to program
Read	None	Status register data
Idle	None	Check SR[7] 1 = WSM Ready 0 = WSM Busy

Repeat for subsequent Word Program operations.

Full Status Register check can be done after each program, or after a sequence of program operations.

Write 0xFF after the last operation to set to the Read Array state.

FULL STATUS CHECK PROCEDURE

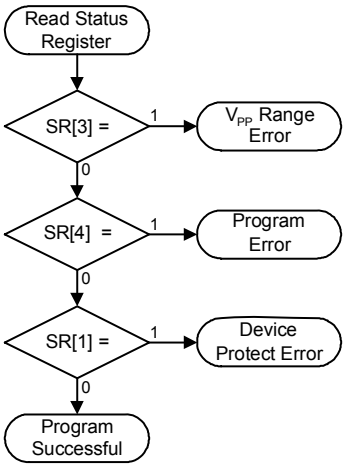

Bus Operation	Command	Comments
Idle	None	Check SR[3]: 1 = V_{PP} Error
Idle	None	Check SR[4]: 1 = Data Program Error
Idle	None	Check SR[1]: 1 = Block locked; operation aborted

If an error is detected, clear the Status Register before continuing operations - only the Clear Staus Register command clears the Status Register error bits.

Figure 35: Program Suspend/Resume Flowchart

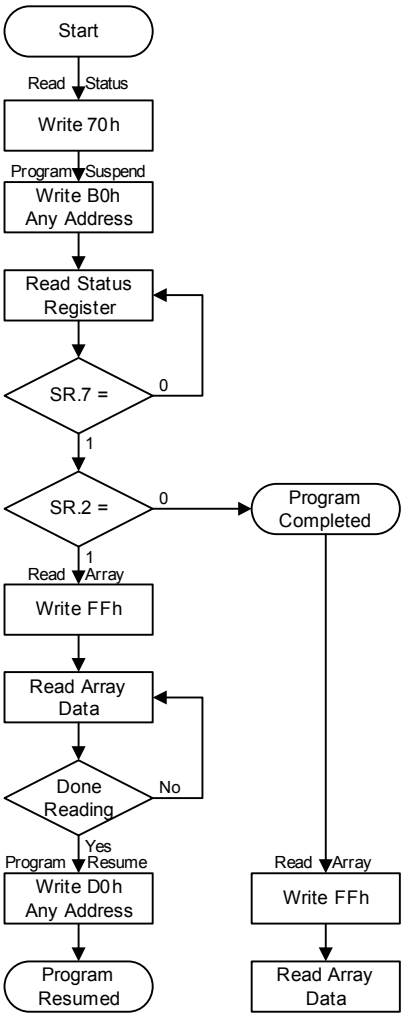

Bus Operation	Command	Comments
Write	Read Status	Data = 70h Addr = Block to suspend (BA)
Write	Program Suspend	Data = B0h Addr = X
Read		Status register data Initiate a read cycle to update Status register Addr = Suspended block (BA)
Standby		Check SR.7 1 = WSM ready 0 = WSM busy
Standby		Check SR.2 1 = Program suspended 0 = Program completed
Write	Read Array	Data = FFh Addr = Block address to read (BA)
Read		Read array data from block other than the one being programmed
Write	Program Resume	Data = D0h Addr = Suspended block (BA)

PGM_SUS.WMF

Figure 36: Buffer Program Flowchart

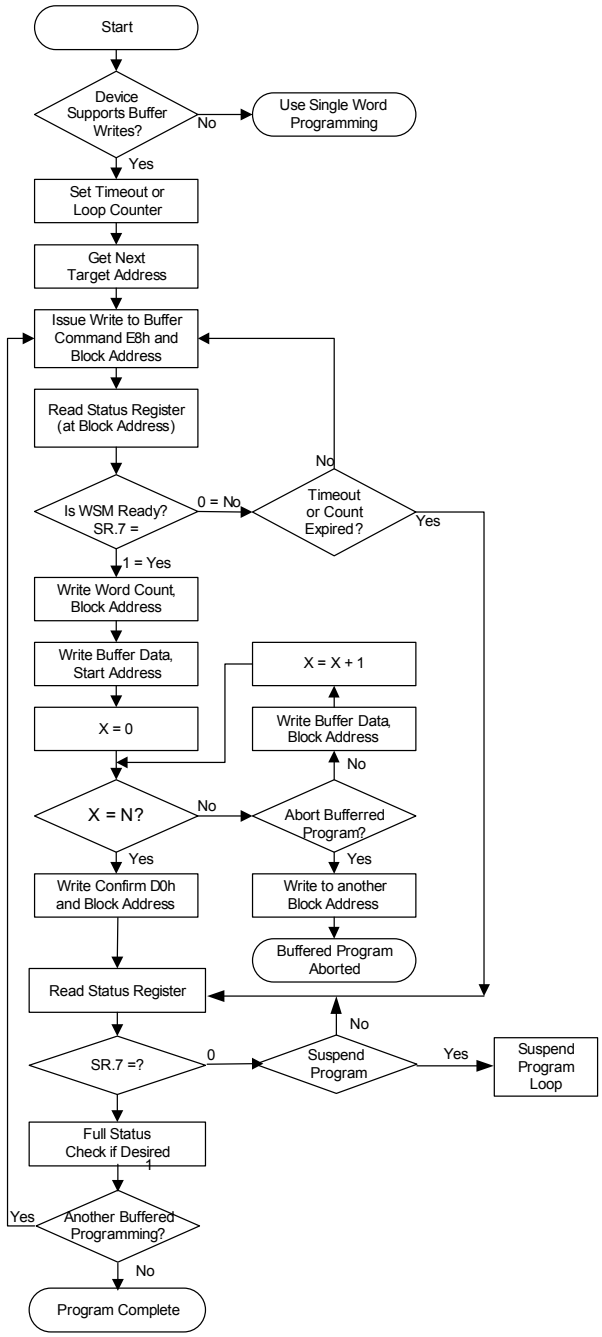

Bus Operation	Command	Comments
Write	Write to Buffer	Data = E8H Addr = Block Address
Read		SR.7 = Valid Addr = Block Address
Standby		Check SR.7 1 = Device WSM is Busy 0 = Device WSM is Ready
Write (Notes 1, 2)		Data = N-1 = Word Count N = 0 corresponds to count = 1 Addr = Block Address
Write (Notes 3, 4)		Data = Write Buffer Data Addr = Start Address
Write (Notes 5, 6)		Data = Write Buffer Data Addr = Block Address
Write	Program Confirm	Data = D0H Addr = Block Address
Read		Status register Data CE# and OE# low updates SR Addr = Block Address
Standby		Check SR.7 1 = WSM Ready 0 = WSM Busy

1. Word count values on DQ_0-DQ_7 are loaded into the Count register. Count ranges for this device are N = 0000h to 0001Fh.
2. The device outputs the status register when read.
3. Write Buffer contents will be programmed at the device start address or destination flash address.
4. Align the start address on a Write Buffer boundary for maximum programming performance (i.e., A_4–A_0 of the start address = 0).
5. The device aborts the Buffered Program command if the current address is outside the original block address.
6. The Status register indicates an "improper command sequence" if the Buffered Program command is aborted. Follow this with a Clear Status Register command.

Full status check can be done after all erase and write sequences complete. Write FFh after the last operation to reset the device to read array mode.

Figure 37: BEFP Flowchart

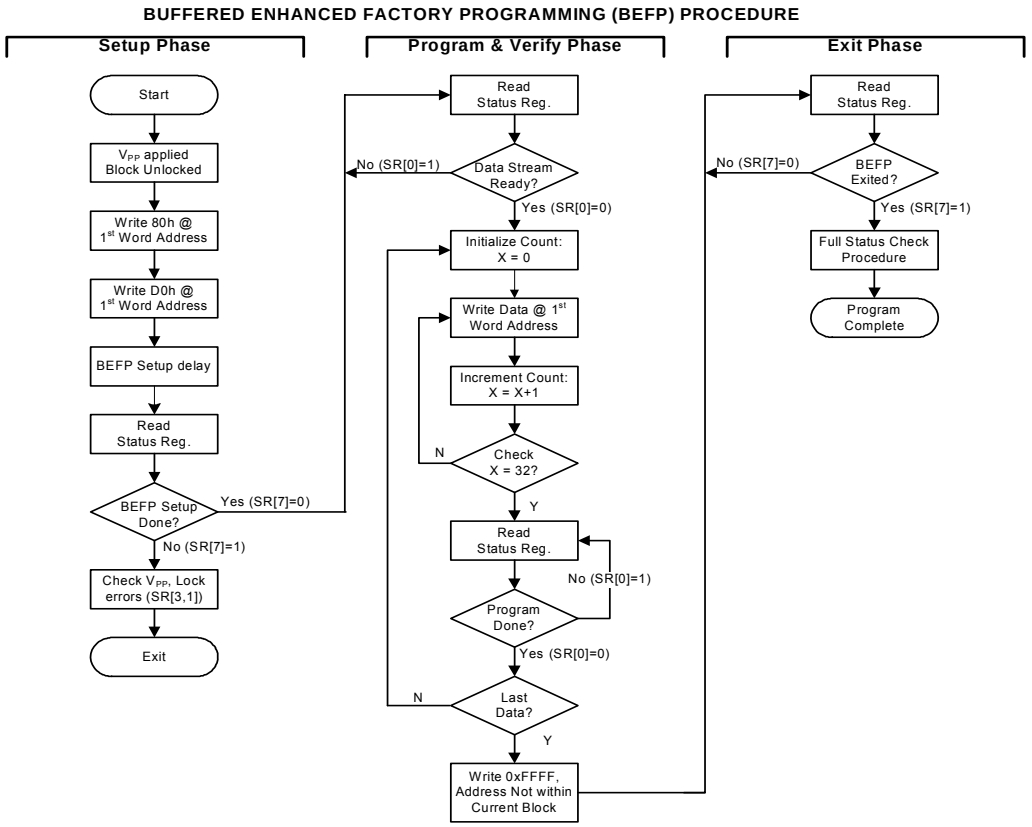

BEFP Setup

Bus State	Operation	Comments
Write	Unlock Block	V_{PPH} applied to VPP
Write (Note 1)	BEFP Setup	Data = 0x80 @ 1st Word Address
Write	BEFP Confirm	Data = 0x80 @ 1st Word Address[1]
Read	Status Register	Data = Status Register Data Address = 1st Word Addr.
Standby	BEFP Setup Done?	Check SR[7]: 0 = BEFP Ready 1 = BEFP Not Ready
Standby	Error Condition Check	If SR[7] is set, check: SR[3] set = V_{PP} Error SR[1] set = Locked Block

BEFP Program & Verify

Bus State	Operation	Comments
Read	Status Register	Data = Status Register Data Address = 1st Word Addr.
Standby	Data Stream Ready?	Check SR[0]: 0 = Ready for Data 1 = Not Ready for Data
Standby	Initialize Count	X = 0
Write (note 2)	Load Buffer	Data = Data to Program Address = 1st Word Addr.
Standby	Increment Count	X = X+1
Standby	Buffer Full?	X = 32? Yes = Read SR[0] No = Load Next Data Word
Read	Status Register	Data = Status Reg. Data Address = 1st Word Addr.
Standby	Program Done?	Check SR[0]: 0 = Program Done 1 = Program in Progress
Standby	Last Data?	No = Fill buffer again Yes = Exit
Write	Exit Prog & Verify Phase	Data = 0xFFFF @ address not in current block

BEFP Exit

Bus State	Operation	Comments
Read	Status Register	Data = Status Register Data Address = 1st Word Addr.
Standby	Check Exit Status	Check SR[7]: 0 = Exit Not Completed 1 = Exit Completed

Repeat for subsequent blocks;

After BEFP exit, a full Status Register check can determine if any program error occurred;

See full Status Register check procedure in the Word Program flowchart.

Write 0xFF to enter Read Array state.

NOTES:
1. First-word address to be programmed within the target block must be aligned on a write-buffer boundary.
2. Write-buffer contents are programmed sequentially to the flash array starting at the first word address (WSM internally increments addressing).

Figure 38: Block Erase Flowchart

BLOCK ERASE PROCEDURE

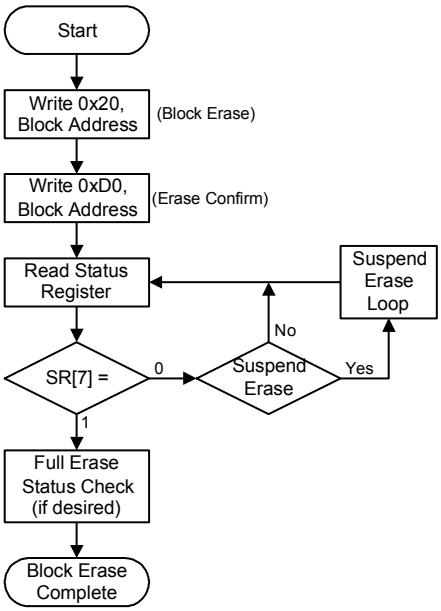

Bus Operation	Command	Comments
Write	Block Erase Setup	Data = 0x20 Addr = Block to be erased (BA)
Write	Erase Confirm	Data = 0xD0 Addr = Block to be erased (BA)
Read	None	Status Register data.
Idle	None	Check SR[7]: 1 = WSM ready 0 = WSM busy

Repeat for subsequent block erasures.

Full Status register check can be done after each block erase or after a sequence of block erasures.

Write 0xFF after the last operation to enter read array mode.

FULL ERASE STATUS CHECK PROCEDURE

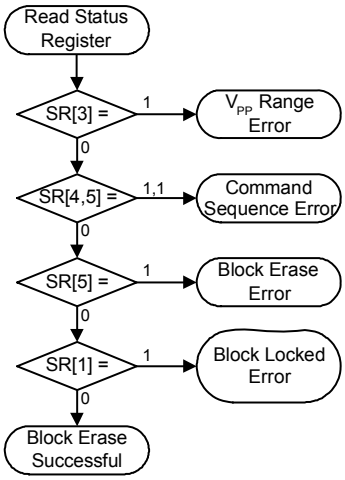

Bus Operation	Command	Comments
Idle	None	Check SR[3]: 1 = V_{PP} Range Error
Idle	None	Check SR[4,5]: Both 1 = Command Sequence Error
Idle	None	Check SR[5]: 1 = Block Erase Error
Idle	None	Check SR[1]: 1 = Attempted erase of locked block; erase aborted.

Only the Clear Status Register command clears SR[1, 3, 4, 5].

If an error is detected, clear the Status register before attempting an erase retry or other error recovery.

Figure 39: Erase Suspend / Resume Flowchart

ERASE SUSPEND / RESUME PROCEDURE

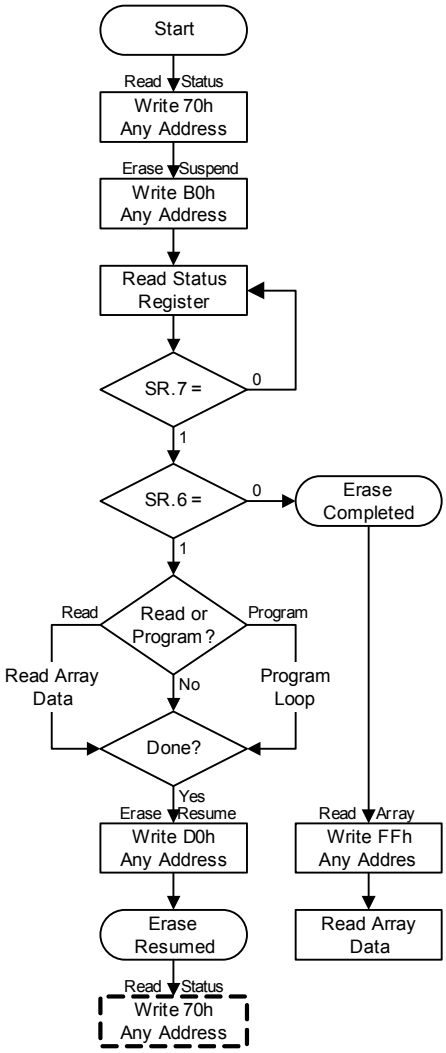

Bus Operation	Command	Comments
Write	Read Status	Data = 70h Addr = Any device address
Write	Erase Suspend	Data = B0h Addr = Same partition address as above
Read		Status register data. Toggle CE# or OE# to update Status register Addr =X
Standby		Check SR.7 1 = WSM ready 0 = WSM busy
Standby		Check SR.6 1 = Erase suspended 0 = Erase completed
Write	Read Array or Program	Data = FFh or 40h Addr = Block to program or read
Read or Write		Read array or program data from/to block other than the one being erased
Write	Program Resume	Data = D0h Addr = Any address

ERAS_SUS.WMF

Figure 40: Block Lock Operations Flowchart

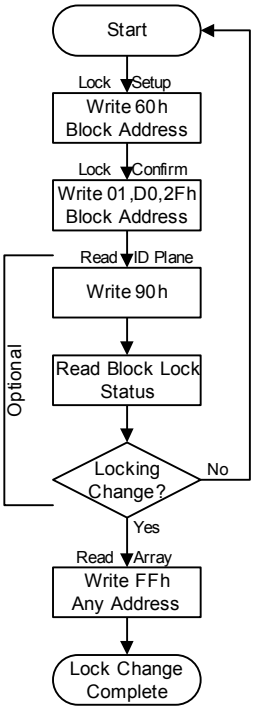

LOCKING OPERATIONS PROCEDURE

Bus Operation	Command	Comments
Write	Lock Setup	Data = 60h Addr = Block to lock/unlock/lock-down (BA)
Write	Lock, Unlock, or Lockdown Confirm	Data = 01h (Lock block) D0h (Unlock block) 2Fh (Lockdown block) Addr = Block to lock/unlock/lock-down (BA)
Write (Optional)	Read ID Plane	Data = 90h Addr = Block address offset+2 (BA+2)
Read (Optional)	Block Lock Status	Block Lock status data Addr = Block address offset+2 (BA+2)
Standby (Optional)		Confirm locking change on DQ_1, DQ_0. (See Block Locking State Transitions Table for valid combinations.)
Write	Read Array	Data = FFh Addr = Block address (BA)

LOCK_OP.WMF

Figure 41: Protection Register Programming Flowchart

PROTECTION REGISTER PROGRAMMING PROCEDURE

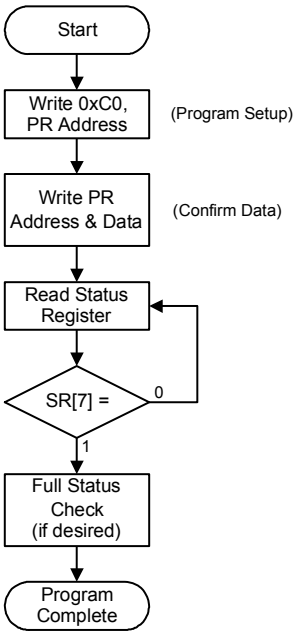

Bus Operation	Command	Comments
Write	Program PR Setup	Data = 0xC0 Addr = First Location to Program
Write	Protection Program	Data = Data to Program Addr = Location to Program
Read	None	Status Register Data.
Idle	None	Check SR[7]: 1 = WSM Ready 0 = WSM Busy

Program Protection Register operation addresses must be within the Protection Register address space. Addresses outside this space will return an error.

Repeat for subsequent programming operations.

Full Status Register check can be done after each program, or after a sequence of program operations.

Write 0xFF after the last operation to set Read Array state.

FULL STATUS CHECK PROCEDURE

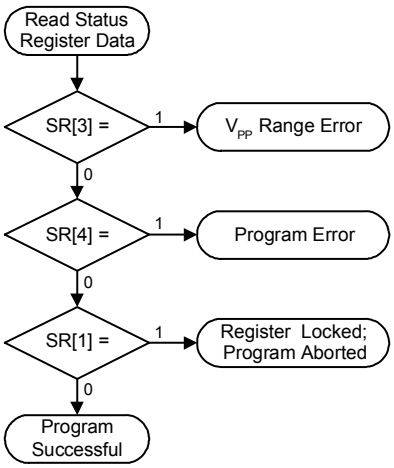

Bus Operation	Command	Comments
Idle	None	Check SR[3]: 1 =V_{PP} Range Error
Idle	None	Check SR[4]: 1 =Programming Error
Idle	None	Check SR[1]: 1 =Block locked; operation aborted

Only the Clear Staus Register command clears SR[1, 3, 4].

If an error is detected, clear the Status register before attempting a program retry or other error recovery.

A.3 Write State Machine

Figure 42 through Figure 47 show the command state transitions (Next State Table) based on incoming commands. Only one partition can be actively programming or erasing at a time. Each partition stays in its last read state (Read Array, Read Device ID, Read CFI or Read Status Register) until a new command changes it. The next WSM state does not depend on the partition's output state.

Figure 42: Write State Machine—Next State Table (Sheet 1 of 6)

Current Chip State [7]		Command Input to Chip and resulting *Chip* Next State										
		Read Array [2] (FFH)	Word Program [3,4] (10H/40H)	Buffered Program (BP) (E8H)	Erase Setup [3,4] (20H)	Buffered Enhanced Factory Pgm Setup [3, 4] (80H)	BE Confirm, P/E Resume, ULB, Confirm [8] (D0H)	BP / Prg / Erase Suspend (B0H)	Read Status (70H)	Clear Status Register [5] (50H)	Read ID/Query (90H, 98H)	Lock, Unlock, Lock-down, CR setup [4] (60H)
Ready		Ready	Program Setup	BP Setup	Erase Setup	BEFP Setup	Ready					Lock/CR Setup
Lock/CR Setup		Ready (Lock Error)					Ready (Unlock Block)	Ready (Lock Error)				
OTP	Setup	OTP Busy										
	Busy											
Word Program	Setup	Word Program Busy										
	Busy	Program Busy						Word Program Suspend	Word Program Busy			
	Suspend	Word Program Suspend					Word Program Busy	Word Program Suspend				
BP	Setup	BP Load 1										
	BP Load 1	BP Load 2										
	BP Load 2	BP Confirm if Data load into Program Buffer is complete; Else BP Load 2										
	BP Confirm	Ready (Error)					BP Busy	Ready (Error)				
	BP Busy	BP Busy						BP Suspend	BP Busy			
	BP Suspend	BP Suspend					BP Busy	BP Suspend				
Erase	Setup	Ready (Error)					Erase Busy	Ready (Error)				
	Busy	Erase Busy						Erase Suspend	Erase Busy			
	Suspend	Erase Suspend	Word Program Setup in Erase Suspend	BP Setup in Erase Suspend	Erase Suspend		Erase Busy	Erase Suspend				Lock/CR Setup in Erase Suspend

Figure 43: Write State Machine—Next State Table (Sheet 2 of 6)

Current Chip State (7)		Command Input to Chip and resulting *Chip* Next State										
		Read Array (2) (FFH)	Word Program (3,4) (10H/40H)	Buffered Program (BP) (E8H)	Erase Setup (3,4) (20H)	Buffered Enhanced Factory Pgm Setup (3, 4) (80H)	BE Confirm, P/E Resume, ULB, Confirm (8) (D0H)	BP / Prg / Erase Suspend (B0H)	Read Status (70H)	Clear Status Register (5) (50H)	Read ID/Query (90H, 98H)	Lock, Unlock, Lock-down, CR setup (4) (60H)
Word Program in Erase Suspend	Setup	Word Program Busy in Erase Suspend										
	Busy	Word Program Busy in Erase Suspend						Word Program Suspend in Erase Suspend	Word Program Busy in Erase Suspend Busy			
	Suspend	Word Program Suspend in Erase Suspend					Word Program Busy in Erase Suspend	Word Program Suspend in Erase Suspend				
BP in Erase Suspend	Setup	BP Load 1										
	BP Load 1	BP Load 2										
	BP Load 2	BP Confirm if Data load into Program Buffer is complete; Else BP Load 2										
	BP Confirm	Erase Suspend (Error)					BP Busy in Erase Suspend	Ready (Error in Erase Suspend)				
	BP Busy	BP Busy in Erase Suspend						BP Suspend in Erase Suspend	BP Busy in Erase Suspend			
	BP Suspend	BP Suspend in Erase Suspend					BP Busy in Erase Suspend	BP Suspend in Erase Suspend				
Lock/CR Setup in Erase Suspend		Erase Suspend (Lock Error)					Erase Suspend (Unlock Block)	Erase Suspend (Lock Error [Botch])				
Buffered Enhanced Factory Program Mode	Setup	Ready (Error)					BEFP Loading Data (X=32)	Ready (Error)				
	BEFP Busy	BEFP Program and Verify Busy (if Block Address given matches address given on BEFP Setup command). Commands treated as data. (7)										

Figure 44: Write State Machine—Next State Table (Sheet 3 of 6)

Current Chip State [7]		Command Input to Chip and resulting *Chip* Next State						
		OTP Setup [4] (C0H)	Lock Block Confirm [8] (01H)	Lock-Down Block Confirm [8] (2FH)	Write RCR Confirm [8] (03H)	Block Address (?WA0) [9] (XXXXH)	Illegal Cmds or BEFP Data [1] (all other codes)	WSM Operation Completes
Ready		OTP Setup	Ready					N/A
Lock/CR Setup		Ready (Lock Error)	Ready (Lock Block)	Ready (Lock Down Blk)	Ready (Set CR)	Ready (Lock Error)		
OTP	Setup	OTP Busy						
	Busy							Ready
Word Program	Setup	Word Program Busy						N/A
	Busy	Word Program Busy						Ready
	Suspend	Word Program Suspend						N/A
BP	Setup	BP Load 1						
	BP Load 1	BP Load 2				Ready (BP Load 2	BP Load 2	
	BP Load 2	BP Confirm if Data load into Program Buffer is complete; ELSE BP load 2				Ready	BP Confirm if Data load into Program Buffer is complete; ELSE BP Load 2	
	BP Confirm	Ready (Error)				Ready (Error) (Proceed if unlocked or lock error)	Ready (Error)	
	BP Busy	BP Busy						Ready
	BP Suspend	BP Suspend						N/A
Erase	Setup	Ready (Error)						
	Busy	Erase Busy						Ready
	Suspend	Erase Suspend						N/A

Figure 45: Write State Machine—Next State Table (Sheet 4 of 6)

Current Chip State (7)		Command Input to Chip and resulting *Chip* Next State						
		OTP Setup (4) (C0H)	Lock Block Confirm (8) (01H)	Lock-Down Block Confirm (8) (2FH)	Write RCR Confirm (8) (03H)	Block Address (?WA0) 9 (XXXXH)	Illegal Cmds or BEFP Data (1) (all other codes)	WSM Operation Completes
Word Program in Erase Suspend	Setup	Word Program Busy in Erase Suspend						NA
	Busy	Word Program Busy in Erase Suspend Busy						Erase Suspend
	Suspend	Word Program Suspend in Erase Suspend						N/A
BP in Erase Suspend	Setup	BP Load 1						N/A
	BP Load 1	BP Load 2				Ready (BP Load 2	BP Load 2	
	BP Load 2	BP Confirm if Data load into Program Buffer is complete; Else BP Load 2				Ready	BP Confirm if Data load into Program Buffer is complete; Else BP Load 2	
	BP Confirm	Ready (Error in Erase Suspend)				Ready (Error) (Proceed if unlocked or lock error)	Ready (Error)	
	BP Busy	BP Busy in Erase Suspend						Erase Suspend
	BP Suspend	BP Suspend in Erase Suspend						N/A
Lock/CR Setup in Erase Suspend		Erase Suspend (Lock Error)	Erase Suspend (Lock Block)	Erase Suspend (Lock Down Block)	Erase Suspend (Set CR)	Erase Suspend (Lock Error)		
Buffered Enhanced Factory Program Mode	Setup	Ready (Error)				Ready (BEFP Loading Data)	Ready (Error)	
	BEFP Busy	BEFP Program and Verify Busy (if Block Address given matches address given on BEFP Setup command). Commands treated as data. (7)				Ready	BEFP Busy	Ready

Figure 46: Write State Machine—Next State Table (Sheet 5 of 6)

Output Next State Table

	Command Input to Chip and resulting *Output* Mux Next State										
Current chip state	Read Array [2] (FFH)	Word Program Setup (3,4) (10H/40H)	BP Setup (E8H)	Erase Setup [3,4] (20H)	Buffered Enhanced Factory Pgm Setup [3, 4] (30H)	BE Confirm, P/E Resume, ULB Confirm [8] (D0H)	Program/ Erase Suspend (B0H)	Read Status (70H)	Clear Status Register [5] (50H)	Read ID/Query (90H, 98H)	Lock, Unlock, Lock-down, CR setup [4] (60H)
BEFP Setup, BEFP Pgm & Verify Busy, Erase Setup, OTP Setup, BP: Setup, Load 1, Load 2, Confirm, Word Pgm Setup, Word Pgm Setup in Erase Susp, BP Setup, Load1, Load 2, Confirm in Erase Suspend	Status Read										
Lock/CR Setup, Lock/CR Setup in Erase Susp	Status Read										
OTP Busy	Read Array	Status Read				Output does not change.		Status Read	Output mux does not change.	Status Read	Status Read
Ready, Erase Suspend, BP Suspend BP Busy, Word Program Busy, Erase Busy, BP Busy BP Busy in Erase Suspend Word Pgm Suspend, Word Pgm Busy in Erase Suspend, Pgm Suspend In Erase Suspend										ID Read	

Figure 47: Write State Machine—Next State Table (Sheet 6 of 6)

Output Next State Table

Current chip state	Command Input to Chip and resulting *Output* Mux Next State						
	OTP Setup [4] (C0H)	Lock Block Confirm [8] (01H)	Lock-Down Block Confirm [8] (2FH)	Write CR Confirm [8] (03H)	Block Address (?WA0) (FFFFH)	Illegal Cmds or BEFP Data [1] (all other codes)	WSM Operation Completes
BEFP Setup, BEFP Pgm & Verify Busy, Erase Setup, OTP Setup, BP: Setup, Load 1, Load 2, Confirm, Word Pgm Setup, Word Pgm Setup in Erase Susp, BP Setup, Load1, Load 2, Confirm in Erase Suspend	Status Read						Output does not change.
Lock/CR Setup, Lock/CR Setup in Erase Susp	Status Read			Array Read	Status Read		
OTP Busy	Status Read	Output does not change.			Array Read	Output does not change.	
Ready, Erase Suspend, BP Suspend BP Busy, Word Program Busy, Erase Busy, BP Busy BP Busy in Erase Suspend Word Pgm Suspend, Word Pgm Busy in Erase Suspend, Pgm Suspend In Erase Suspend							

Notes:

1. "Illegal commands" include commands outside of the allowed command set (allowed commands: 40H [pgm], 20H [erase], etc.)
2. If a "Read Array" is attempted from a busy partition, the result will be invalid data. The ID and CFI data are located at different locations in the address map.
3. 1st and 2nd cycles of "2 cycles write commands" must be given to the same partition address, or unexpected results will occur.
4. To protect memory contents against erroneous command sequences, there are specific instances in a multi-cycle command sequence in which the second cycle will be ignored. For example, when the device is program suspended and an erase setup command (0x20) is given followed by a confirm/resume command (0xD0), the second command will be ignored because it is unclear whether the user intends to erase the block or resume the program operation.
5. The Clear Status command only clears the error bits in the status register if the device is not in the following modes: WSM running (Pgm Busy, Erase Busy, Pgm Busy In Erase Suspend, OTP Busy, BEFP modes).
6. BEFP writes are only allowed when the status register bit #0 = 0, or else the data is ignored.

7. The "current state" is that of the "chip" and not of the "partition"; Each partition "remembers" which output (Array, ID/CFI or Status) it was last pointed to on the last instruction to the "chip", but the next state of the chip does not depend on where the partition's output mux is presently pointing to.
8. Confirm commands (Lock Block, Unlock Block, Lock-Down Block, Configuration Register) perform the operation and then move to the Ready State.
9. WA0 refers to the block address latched during the first write cycle of the current operation.

Appendix B Conventions - Additional Information

B.1 Conventions

VCC:	Signal or voltage connection
V_{CC}:	Signal or voltage level
0x:	Hexadecimal number prefix
0b:	Binary number prefix
SR[4]:	Denotes an individual register bit.
A[15:0]:	Denotes a group of similarly named signals, such as address or data bus.
A5:	Denotes one element of a signal group membership, such as an individual address bit.
Bit:	Binary unit
Byte:	Eight bits
Word:	Two bytes, or sixteen bits
Kbit:	1024 bits
KByte:	1024 bytes
KWord:	1024 words
Mbit:	1,048,576 bits
MByte:	1,048,576 bytes
MWord:	1,048,576 words

B.2 Acronyms

BEFP:	Buffer Enhanced Factory Programming
CUI:	Command User Interface
MLC:	Multi-Level Cell
OTP:	One-Time Programmable
PLR:	Protection Lock Register
PR:	Protection Register
RCR:	Read Configuration Register
RFU:	Reserved for Future Use
SR:	Status Register
WSM:	Write State Machine

B.3 Nomenclature

Block :	A group of bits, bytes, or words within the flash memory array that erase simultaneously. The P30 has two block sizes: 32 KByte and 128 KByte.
Main block :	An array block that is usually used to store code and/or data. Main blocks are larger than parameter blocks.
Parameter block :	An array block that may be used to store frequently changing data or small system parameters that traditionally would be stored in EEPROM.
Top parameter device :	A device with its parameter blocks located at the highest physical address of its memory map.
Bottom parameter device :	A device with its parameter blocks located at the lowest physical address of its memory map.

B.4 Additional Documentation

Order/Document Number	Document/Tool
309045	P30 Family Specification Update
308291	Schematic Review Checklist for Numonyx™ StrataFlash® Embedded Memory (P30)
300783	Using Numonyx™ Flash Memory: Asynchronous Page Mode and Synchronous Burst Mode
290667	Numonyx™ StrataFlash® Memory (J3) Datasheet
306667	Migration Guide for Numonyx™ StrataFlash® Memory (J3) to Numonyx™ StrataFlash® Embedded Memory (P30/P33) Application Note 812
314750	Numonyx™ StrataFlash® Memory (P30) to Numonyx™ StrataFlash® Embedded Memory (P33) Conversion Guide Application Note 867
290737	Numonyx™ StrataFlash® Synchronous Memory (K3/K18) Datasheet
306669	Migration Guide for Numonyx™ StrataFlash® Synchronous Memory (K3/K18) to Numonyx™ StrataFlash® Embedded Memory (P30) Application Note 825
290701	Numonyx™ Wireless Flash Memory (W18) Datasheet
290702	Numonyx™ Wireless Flash Memory (W30) Datasheet
252802	Numonyx™ Flash Memory Design for a Stacked Chip Scale Package (SCSP)
298161	Numonyx™ Flash Memory Chip Scale Package User's Guide
253418	Numonyx™ Wireless Communications and Computing Package User's Guide
296514	Numonyx™ Small Outline Package Guide
297833	Numonyx™ Flash Data Integrator (Numonyx™ FDI) User Guide
298136	Numonyx™ Persistent Storage Manager (Numonyx™ PSM) User Guide
306668	Migration Guide for Spansion* S29GLxxxN to Numonyx™ StrataFlash® Embedded Memory (P30/P33) Application Note 813

Note: Contact your local Numonyx or distribution sales office or visit Numonyx's World Wide Web home page at http://www.numonyx.com for technical documentation, tools, or the most current information on Numonyx™ Flash Memory.

Appendix C Revision History

Revision Date	Revision	Description
April 2005	-001	Initial Release
August 2005	-002	Revised discrete memory maps in Section 1.4, "Memory Maps" on page 7 Added memory maps for 512-Mbit top parameter devices in Section 1.4, "Memory Maps" on page 7 Fixed size of Programming Region for 256-Mbit to be 8-Mbit in Section 1.4, "Memory Maps" on page 7 and Section 8.0, "Program Operation" on page 29 Removed power supply sequencing requirement in Section 12.1, "Power-Up and Power-Down" on page 50 Updated conditions for Table 29, "Capacitance" on page 56 Updated CFI table in Appendix A, "Common Flash Interface Tables"
September 2005	-003	Added note to Table 14, "Device ID codes" on page 28 for stacked Device ID codes Synchronous burst read operation is currently not supported for the TSOP package Updated 512-Mbit Easy BGA Ball Height (symbol A1) in Figure 2, "Easy BGA Mechanical Specifications" on page 11
November 2005	-004	Updated read access speed for 265M TSOP package
February 2006	-005	Removed all references to 1 Gigabit.
April 2006	-006	• Added 52 MHz capabilities, • Added TSOP Package information for 512 Mb throughout the document, • Added Section 1.3, "Virtual Chip Enable Description" on page 6, • Modified figures in Section 4.1, "Dual-Die Configurations" on page 21, • Modified Table 5, "512-Mbit Top and Bottom Parameter Memory Map (Easy BGA and QUAD+ SCSP)" on page 9, • Modified Notes 5 & 6 to Reset Specifications table in Section 12.2, "Reset Specifications" on page 50, • Added additional note on 512 Mb capability in Table 17, "Selectable OTP Block Mapping" on page 39.
May 2006	-007	• Updated the following tables to 52 MHz: Table 30, "AC Read Specifications for 64/128- Mbit Densities" on page 56 and Table 31, "AC Read Specifications for 256/512-Mbit Densities" on page 57.
May-2006	-008	• Added notes 1, 2, and 3 to Table 29, "Capacitance" on page 56.
June - 2007	-009	• Correct typos and add clarifications • Enabled specific burst operation on TSOP packages. • Updated device commands table. • Updaed description on synchronous burst operation. • Added EOWL description. • Updated flowcharts
November 2007	-010	• Updated for 65nm lithography • Added W602 - Erase to Suspend
November 2007	11	• Applied Numonyx branding.
August 2008	12	• Corrected single word (65 nm) program time from 125 (typ) and 150 (max) to 150 (typ) and 456 (max) in Table 34, "Program and Erase Specifications" on page 67.