United States Patent [19]

Bruder

[11] **Patent Number: 4,559,616**

[45] **Date of Patent: Dec. 17, 1985**

[54] **FAST, NON-VOLATILE SEMICONDUCTOR/BUBBLE MEMORY WITH TEMPERATURE-COMPENSATED MAGNETIC BIAS FIELD**

[75] Inventor: **John F. Bruder,** Phoenix, Ariz.

[73] Assignee: **Quadri Corporation,** Tempe, Ariz.

[21] Appl. No.: **657,194**

[22] Filed: **Oct. 3, 1984**

[51] **Int. Cl.**[4] **G11C 19/08**

[52] **U.S. Cl.** **365/28**

[58] **Field of Search** 365/1, 27, 28

[56] **References Cited**

U.S. PATENT DOCUMENTS

4,117,544 9/1978 Ault 365/28

Primary Examiner—James W. Moffitt

Attorney, Agent, or Firm—Cahill, Sutton & Thomas

[57] **ABSTRACT**

A system for optimizing the performance of a bubble memory includes a temperature sensor, the output of which is amplified and converted to a digital number by a low power A/D converter to address a memory that stores correction data for various temperatures represented by the temperature sensor output. The correction data output by the memory is converted to an analog signal that is used to control the current flowing through a bias coil of the bubble memory. The bubble memory is used as a non-volatile back-up memory for a CMOS-RAM. A relatively small capacitor bank is charged to a high voltage during normal operation of the CMOS-RAM by a voltage booster circuit. In the event of a power interruption, low power control circuitry actuates a voltage down converter circuit that produces a regulated output voltage to temporarily power the control circuitry while the CMOS-RAM is being transferred to the bubble memory. The temperature correction of the magnetic bias field makes possible optimized performance of the bubble memory with low power consumption, allowing the physical size of the capacitor bank to be minimized so that the entire hybrid memory system, including the capacitor bank, can be implemented as a plug-in replacement for a pre-existing core memory module.

11 Claims, 6 Drawing Figures

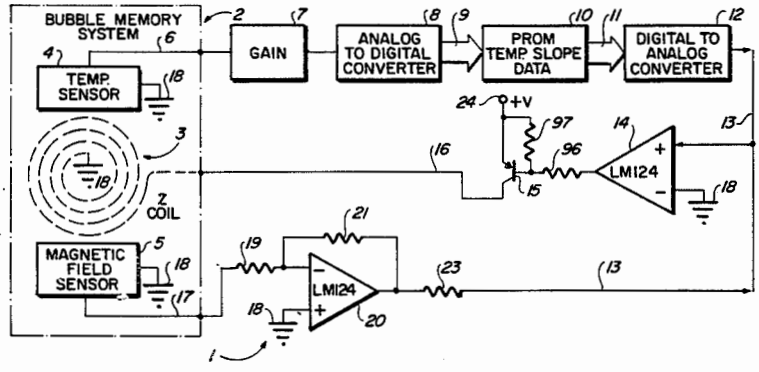

Petitioner Intel Corp., Ex. 1034
IPR2023-00783

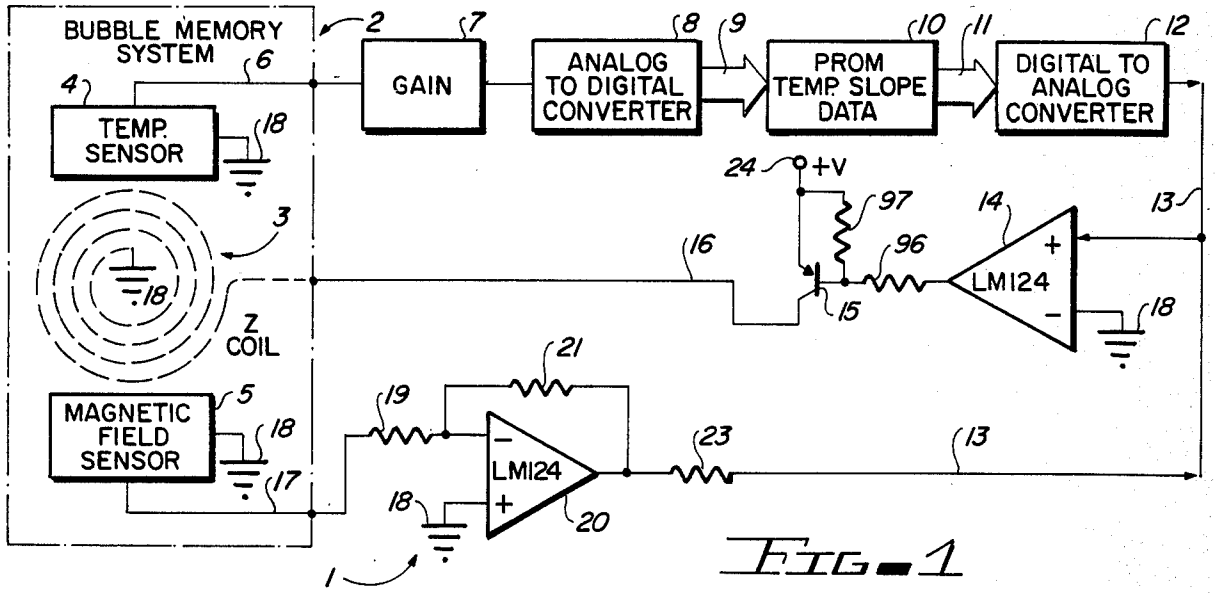
BUBBLE MEMORY SYSTEM
TEMP. SENSOR
GAIN
ANALOG TO DIGITAL CONVERTER
PROM TEMP. SLOPE DATA
DIGITAL TO ANALOG CONVERTER
+V
LM124
Z COIL
MAGNETIC FIELD SENSOR
LM124

FIG. 1

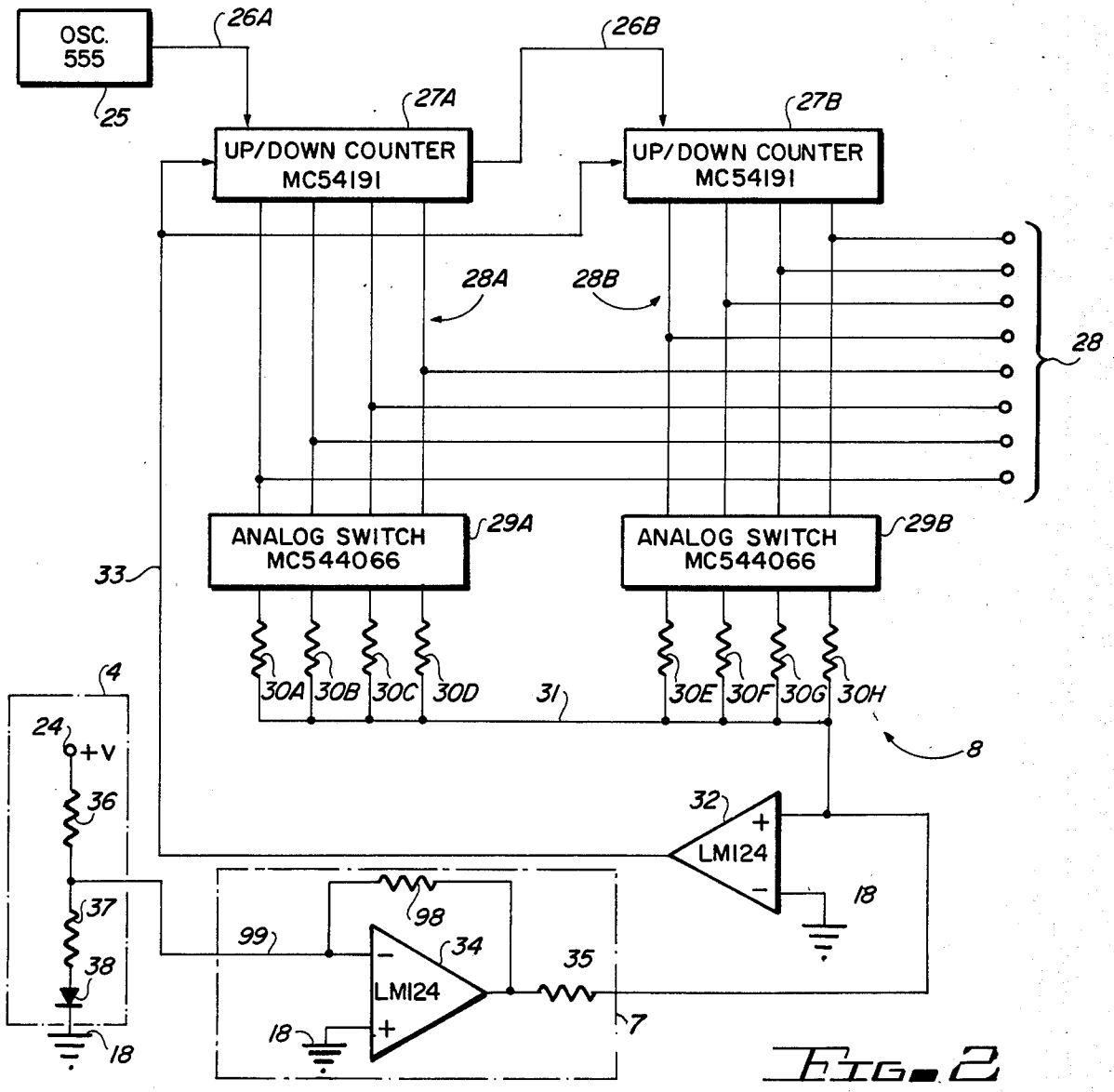
OSC. 555
UP/DOWN COUNTER MC54191
UP/DOWN COUNTER MC54191
ANALOG SWITCH MC544066
ANALOG SWITCH MC544066
+V
LM124
LM124

FIG. 2

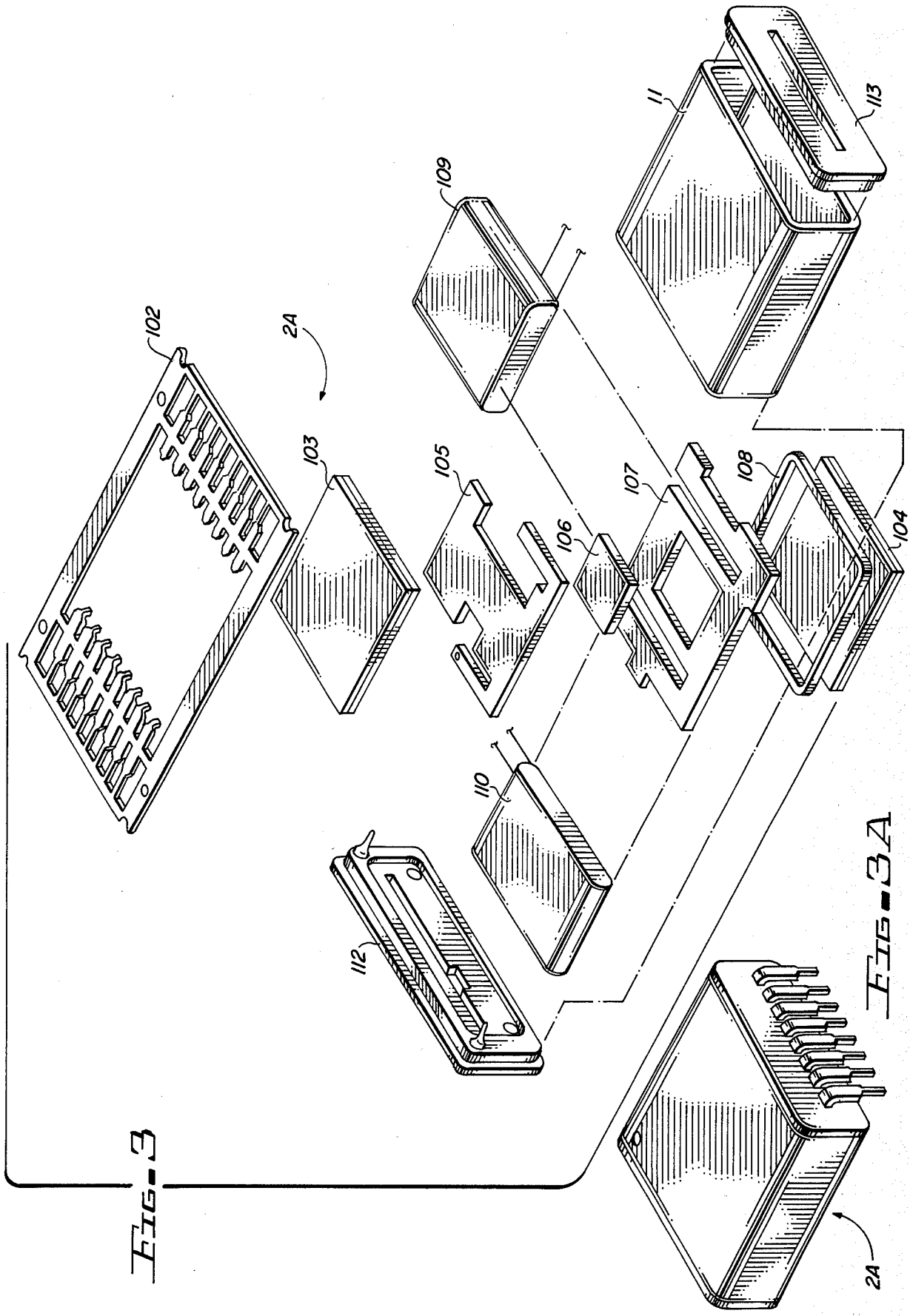

FIG. 3

FIG. 3A

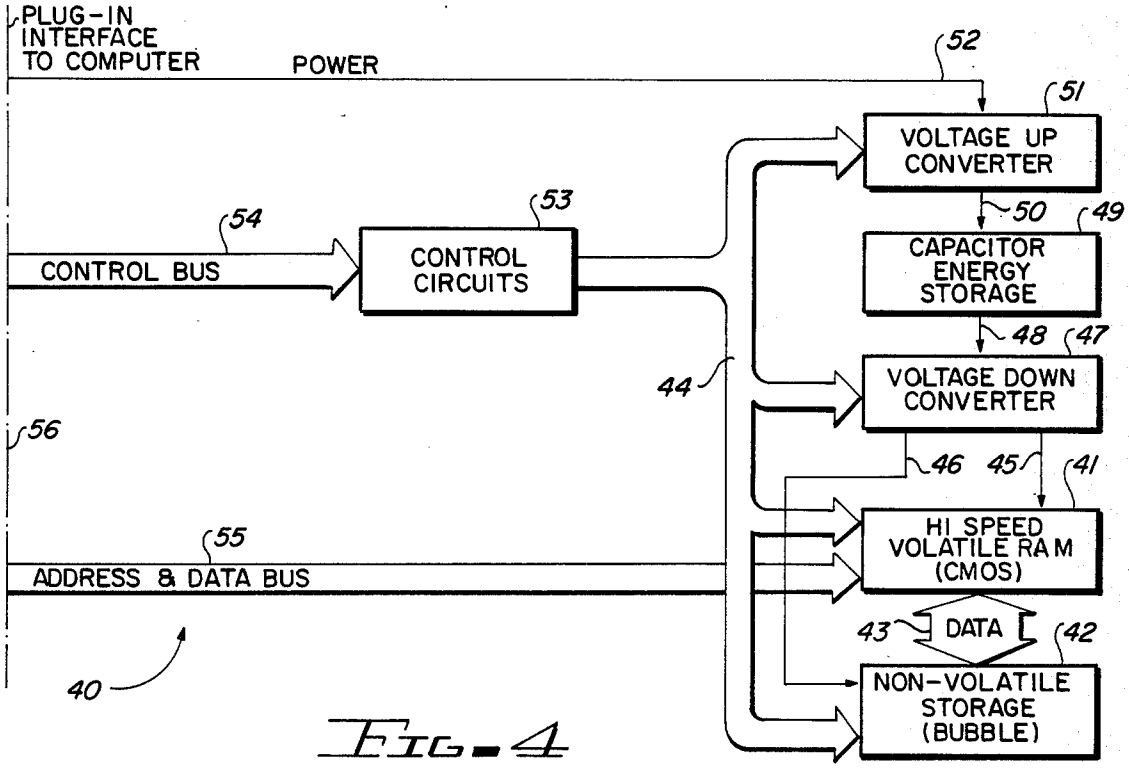
PLUG-IN INTERFACE TO COMPUTER
POWER
52
51
VOLTAGE UP CONVERTER
50
49
CAPACITOR ENERGY STORAGE
48
47
VOLTAGE DOWN CONVERTER
44
54
CONTROL BUS
53
CONTROL CIRCUITS
56
46
45
41
HI SPEED VOLATILE RAM (CMOS)
55
ADDRESS & DATA BUS
43
DATA
42
NON-VOLATILE STORAGE (BUBBLE)
40

FIG. 4

FIG. 5

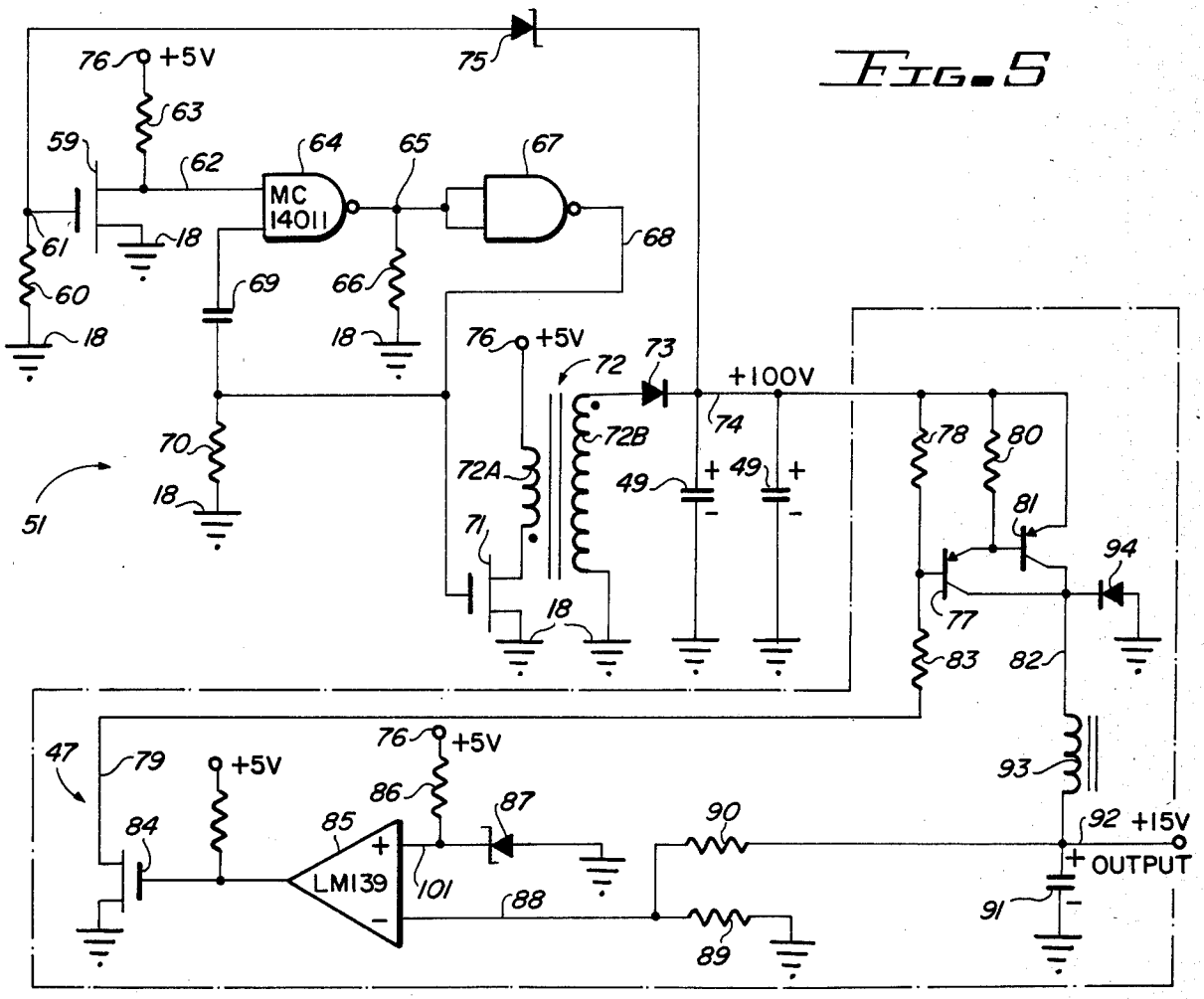
76
+5V
75
63
59
62
64
65
67
MC 14011
61
18
68
60
69
66
18
18
76
+5V
72
73
+100V
74
72B
70
72A
49
49
78
80
18
51
71
81
94
18
77
83
82
47
79
+5V
76
+5V
86
87
93
84
85
90
92
+15V
LM139
101
OUTPUT
88
91
89

FAST, NON-VOLATILE SEMICONDUCTOR/BUBBLE MEMORY WITH TEMPERATURE-COMPENSATED MAGNETIC BIAS FIELD

BACKGROUND OF THE INVENTION

The invention relates to computer memories, and more particularly to non-volatile computer memories of the type which retain their stored data despite an interruption in power that supplies the memory, and still more particularly to non-volatile memories other than core memories.

Although in earlier years the dominant technology for mainframe memories was the ferrite core memory technology, for most applications lower cost, higher speed, lower power semiconductor memories have replaced the ferrite core memory technology. However, semiconductor memories have always suffered from one drawback compared to core memories in that semiconductor memories are generally volatile. That is, semiconductor memories (of the type that are presently practical for use in computer mainframe memories) lose stored data if the power supplying the computer is interrupted, even momentarily. Various techniques have been devised for overcoming this problem in most commercial computer systems, for example, by providing various battery back up systems. However, in some applications, especially in certain military applications, core memories remain the dominant technology, and the main reason for this is that non-volatility is needed. However, the continued development and refinement and lower costs of various semiconductor technologies would make it increasingly attractive to be able to utilize semiconductor memories in applications still dominated by the ferrite core technology, if there were a practical way of overcoming the volatility of semiconductor main memory technology.

Accordingly, it is clear that there remains an unmet need for a practical, inexpensive, non-volatile, high speed, lower power semiconductor memory replacement for certain ferrite core memory applications.

SUMMARY OF THE INVENTION

Accordingly, it is an object of the invention to provide a non-volatile, low power, high speed semiconductor memory "plug-in replacement" for ferrite core random access memories.

It is another object of the invention to provide a non-volatile semiconductor memory which truly completely replaces a preexisting core memory module by simply unplugging the core memory module and plugging the semiconductor memory into the same slot.

It is another object of the invention to provide a system for optimizing the design of a bubble memory system over a predetermined temperature range.

Briefly described, and in accordance with one embodiment thereof, the invention provides a method and apparatus for operating a bubble memory system by storing digital temperature compensation data numbers, each representative of the amount of change of a magnetic bias field produced in the bubble memory system, needed to optimize the operation of the bubble memory system, each of the digital temperature compensation data numbers corresponding to a different temperature of the bubble memory system, by sensing a temperature indicative of the present temperature of a bubble memory chip to produce an analog temperature signal, by converting the analog temperature of the bubble memory chip, by accessing memory locations in which the digital temperature compensation data numbers are stored to obtain the temperature compensation data number corresponding to the present temperature, by converting that temperature compensation number to an analog output signal, and by changing the magnetic bias field by an amount corresponding to the value of the analog output signal. In the described embodiment of the invention, the memory in which the temperature compensation data numbers are stored is a programmable read only memory. The analog temperature signal is converted to a digital number by a low power CMOS analog to digital converter, and the compensation number produced by accessing the programmable read only memory is converted to an analog output correction signal by a low power CMOS digtal to analog converter.

In the described embodiment of the invention, an optional magnetic field sensor produces an analog output signal in response to the magnetic bias field which, in conjunction with the analog output correction signal of the digital to analog converter, is used to correct the drive current in a bias field coil that produces the magnetic bias field, thereby correcting for the variations in the bias field due, for example, to aging of components of the system. The bubble memory system and its temperature compensating apparatus and magnetic field compensating apparatus are included in a hybrid memory system that includes a high speed CMOS memory. The bubble memory functions as a non-voltatile backup memory into which the contents of the CMOS memory are transferred in the event of a power interruption. In the event of a power interruption, temporary power is supplied to the CMOS memory and to the bubble memory system, and also to a low power control circuit by means of a high voltage capacitor bank which is gradually discharged into a down voltage converter that produces a constant, regulated output voltage to the control circuitry, the CMOS memory, and the bubble memory system. During normal memory operation, a conventional power bus supplies operating power to the control circuitry and to the CMOS memory, and also charges up the capacitor bank to a predetermined high voltage. The correction of the magnetic bias field for variations in temperature of the bubble memory chip makes possible the optimized peformance of the bubble memory system with low power consumption, which in turn allows the physical size of the capacitor bank to be minimized, so that the entire hybrid memory system, including the capacitor bank, can be implemented as a plug-in replacement for a pre-existing core memory module.

BRIEF DESCRIPTION OF THE DRAWING

FIG. 1 is a block diagram of the temperature compensation system for the bias field produced by a Z coil of a bubble memory system to automatically compensate for variations in temperature of the bubble memory system.

FIG. 2 is a block diagram of a low power analog to digital converter circuit and a temperature sensing circuit which can be utilized in the system of FIG. 1.

FIG. 3 is an exploded perspective view of a bubble memory device in conjunction with which the temperature compensation circuitry of FIG. 1 can be utilized.

Petitioner Intel Corp., Ex. 1034
IPR2023-00783

FIG. 3A is a perspective un-exploded view of the packaged bubble memory of FIG. 3.

FIG. 4 is a block diagram of a hybrid high speed semiconductor random access memory, with a non-volatile bubble memory back-up system that can be utilized as a core memory replacement which is non-volatile.

FIG. 5 is a diagram of the voltage up converter circuit of FIG. 4 and the voltage down circuit of FIG. 4.

DESCRIPTION OF THE INVENTION

Referring now to the drawings, a bias field compensated bubble memory module **1** includes a typical bubble memory module **2**. The basic components of the bubble memory system **2**, including a bubble memory chip, two permanent bias magnets, a conventional X coil, a Y coil, and a Z coil are subsequently described with reference to FIG. **3**. These components are all quite conventional.

In the present invention, the current through the Z coil **3** is automatically varied to compensate the bias field produced by the two permanent magnets with respect to the temperature of bubble memory system **2**. For convenience of illustration, the Z coil is designated by dotted lines **3** in bubble memory system **2**, although the other conventional components are not indicated in FIG. **1**.

A suitable temperature sensor **4** appropriately located near the bubble memory chip in bubble memory system **2** is connected between a ground conductor **18** and a conductor **6**. Conductor **6** is connected to the input of a gain amplifier **7**, the output of which is connected to the analog input of analog to digital converter **8**. The details of analog to digital converter **8** are subsequently described with reference to FIG. **2**.

At this point, it is worthwhile to emphasize that it is essential that the overall power dissipation of bias field compensated bubble memory module **1** be kept as low as possible, so that the energy storage capacitors **49** in the hybrid CMOS/bubble memory system of FIG. **4**, subsequently described, can be as small as possible while still allowing a complete transfer of all data from the CMOS memory **41** to the bubble memory **42** in the event of a power failure. Preferably, the size of the entire hybrid CMOS/bubble memory system **40** of FIG. **4**, including the storage capacitors **49** and all associated control circuitry, fits into a package having the dimensions of 6 inches by 9 inches by 1.4 inches.

In the described embodiment of the invention, analog to digital converter **8** is an eight bit device, and its eight digital output bits are designated by reference numeral **9**. A digital output **9**, including any necessary control lines, are connected to the address and other appropriate inputs of programmable read only memory (PROM) **10**. The data outputs of programmable read only memory **10**, are connected to the digital inputs of a low power digital to analog converter **12**. The data stored in programable read only memory includes temperature compensation data corresponding to the correction in the magnetic field produced by Z coil **3** in order to optimize the operation of bubble memory system **2** at each of 256 different temperatures of the bubble memory chip, in the range from −55° to +85° Centigrade.

The analog output of digital to analog converter **12** is connected to conductor **13**. Conductor **13** is connected to the positive input of an amplifier **14**, the negative input of which is connected to ground conductor **18**. The amplified analog signal on conductor **13** produced at the output of amplifier **14** is applied by means of a resistor **96** to the base of a PNP power transistor **15**, which base is coupled by another resistor **97** to its emitter. The junction between the emitter and base of transistor **15** are connected to a volt supply voltage conductor **24**. The collector of PNP transistor **15** is connected to conductor **16**, which is connected to one terminal of Z coil **3**, the other terminal of which is connected to the ground conductor **18**.

Optionally, a magnetic field sensor **5**, such as a Hall effect device, is connected between ground conductor **18** and a conductor **17**. Conductor **17** is coupled by a resistor **19** to the negative input of an operational amplifier **20**, the positive input of which is connected to ground conductor **18**. The inverting input of operational amplifier **20** is connected by resistor **21** to the output thereof, so that the ratio of the resistors **19** and **21** determines the gain of amplifier **20**. The output of amplifier **20** is coupled by resistor **23** to conductor **13**.

The "basic" operation of the bubble memory system **2** is essentially as it would be without the bias field compensation system including the circuitry shown in FIG. **1**. Note that the circuitry that drives the conventional X coil and Y coils to produce the well-known rotating vector which effectuates propagation of bubbles in the bubble memory chip is commonly used by those skilled in the art, and therefore is not described here.

It is known to those skilled in the art that the operation of the bubble memory chip is temperature sensitive, and that values of the bias field, (which is produced mainly by the two permanent magnets positioned above and below the bubble memory chip) are optimum at certain temperatures of the bubble memory chip. Accordingly, the temperature of the bubble memory chip is sensed by temperature sensing element **4** and amplified as necessary by gain circuit **7** to produce a suitable analog signal representative of the present temperature of the bubble memory chip. This analog signal is applied to the input of analog to digital converter **8**. Analog to digital converter **8** converts this signal to an 8 bit digital word **9**, which is a digital representation of the present bubble memory chip temperature. This eight bit word is used to address programmable read only memory **10**.

Each of the 256 addresses of programmable read only memory **10** corresponds to a different temperature of the bubble memory chips. At each such address there is stored an eight bit data word that represents a correction that needs to be made to the current flowing through Z coil **3** in order to cause the magnetic bias field to which the bubble memory chip is subjected to have an optimum value.

In accordance with the present invention, the various values written into each of the 256 locations of programmable read only memory **10** are empirically determined by subjecting the bubble memory system **2** to each of 256 different temperatures, experimentally varying the magnetic bias field (by superimposing appropriate digital levels on conductors **11**) until optimized bubble memory performance is achieved. The optimum digital number, when determined, then is written into programmable read only memory **10** at an address corresponding to that temperature.

Then, during normal operation, this digital temperature compensation number can be produced by PROM **10** to cause digital to analog converter **12** to produce an analog output signal on conductor **13**, which, when amplified by amplifier **14**, causes the necessary correc-

tion current to flow through Z coil **3** to thereby produce the optimum bias field at the present temperature.

It should be noted the above-described system can, if necessary, operate quite successfully without magnetic field sensor **5** and the amplifier **20**. In some preferred embodiments of the invention, the magnetic field sensor **5** and amplifer **20** and the feedback that it provides to conductor **13** can be eliminated if the variation of the magnetic bias field with the age of the various components is not significant. However, if aging of components (or other factors) produces an undesirable variation in the magnetic bias field to which the bubble memory chips are exposed, then magnetic field sensor **5** and amplifier circuitry **20** can be provided to sense the magnetic bias field and produce a corrective summing current into conductor **13** in order to correspondingly alter the drive current through Z coil **3** and thereby correct the magnetic bias field to account for such undesirable variations.

The basic components shown in FIG. **1** can be readily implemented by those skilled in the art. The temperature sensor **4** can be a suitable thermistor or can be a temperature sensing diode circuit of the type designated by reference numeral **4** in FIG. **2**, subsequently described. The gain circuit **7** can be the operational amplifier **34** connected as shown in FIG. **2**, subsequently described. Analog to digital converter **8** can be a CMOS implementation described in detail with reference to FIG. **2**. Programmable read only memory **10** can be a fusable link CMOS programmable read only memory such as the Harris HM661, which is a 256 word by eight bit device. Digital to analog converter **12** can be implemented by using circuitry similar to some of that in analog to digital converter shown in FIG. **2**. Operational amplifiers **14** and **20** can be National Semiconductor LM124 low power devices, which are readily available. PNP power transistor **15** can be a 2N2532. Magnetic field sensor 5 can be a PN915512-12 Hall effect device sold by Microswitch, Inc.

The above-described system results in the widest possible operating margins for any particular design of the bubble memory system **2**. The system automatically compensates for any variation with temperature in all of the components of the bubble memory system, including the bubble memory chip itself, the X coil, the Y coil, and the circuitry that drives the X and Y coils.

Referring now to FIG. **3**, the exploded view of a conventional bubble memory system **2A** that can be used to implement bubble memory system **2** of FIG. **1** includes a **16** pin lead frame **102** and bias magnets **103** and **104**. A bubble memory chip **106** is "sandwiched" between bias magnets **103** and **104**. Chip **106** is held in a chip carrier **107**. Chip carrier **107** rests on a Z coil **108**. A screen **105** is positioned above bubble memory chip **106** and chip carrier **107**, and bias magnet **103** is placed above screen **105**. Bubble memory chip **106** and the inner portion of chip carrier **107** are surrounded by Y coil **109**, as indicated by dashed lines **1094**. X coil **110** surrounds the assembly including bubble memory chip **106**, chip carrier **107** and Y coil **109**, as indicated by the dashed lines. The electrical contact points of lead frame **102** are electrically bonded in the usual fashion to conductors associated with bubble memory **106**. The entire above-described assembly is positioned inside of housing **11**, the ends of which are sealed by means of end caps **112** and **113**. The complete assembly, after the frame portion of lead frame **102** has been removed and the leads have been bent, is shown in FIG. **3A**.

Referring next to FIG. **2**, a very low power CMOS implementation of analog to digital converter **8** includes an oscillator **25** set to produce output pulses every millisecond on conductor **26A**. Conductor **26A** is connected to the clock input of a CMOS up/down counter **27A**, which is a four bit counter. Its carry output is connected by means of conductor **26B** to the clock input of a second identical four bit up/down counter **27B**.

A control conductor **33** is connected to the up/down control input of both of counters **27A** and **27B**. The four digital outputs **28A** of up/down counter **27A** are connected to the four inputs of an analog switch circuit **29A**. Similarly, the four digital outputs **28B** of up/down counter **27B** are connected to the four inputs of a four bit analog switch circuit **29B**. Reference numeral **28** generally designates the two groups of conductors **28A** and **28B**, which produce the digital output of analog to digital converter **8**. The four outputs of analog switch **29A** are coupled by means of resistors **30A**, **30B**, **30C**, and **30D** to summing conductor **31**. Similarly, the outputs of analog switch circuit **29B** are coupled by means of resistors **30E**, **30F**, **30G**, and **30H** to summing conductor **31**.

Summing conductor **31** is connected to the positive input of operational amplifier **32**, the negative input of which is connected to ground conductor **18**. The output of amplifier **32** is connected to up/down control conductor **33** in order to control whether up/down counters **27A** and **27B** are counting up or down in response to the signal produced by oscillator **25**.

Summing conductor **31** is coupled by means of resistor **35** to the output of operational amplifier **34**.

In FIG. **2**, the temperature sensor **4** of FIG. **1** is designated by dotted line **4**, and is implemented by means of a diode **38** having its cathode connected to ground conductor **18** and its anode connected to resistor **37**. The other terminal of resistor **37** is connected by conductor **99** to the negative input of amplifier **34** and also to one terminal of a resistor **36**. The other terminal of resistor **36** is connected to the voltage supply conductor **24**. Conductor **99** is coupled by feedlock resistor **98** to the output of operational amplifier **34**. The negative input of operational amplifier **34** is connected to ground conductor **18**.

The components of analog to digital converter **8** can be easily supplied by one skilled in the art. For example, oscillator **25** can be implemented by means of a CMOS 555 timer, available from various manufacturers. Up/-down counters **27A** and **27B** can be implemented by CMOS integrated circuits manufactured by Motorola, having the part number MC54191. Analog switch circuits **29A** and **29B** can be each implemented by means of MC544066 CMOS integrated circuits manufactured by Motorola. Operational amplifiers **32** and **34** can be LM124 low power operational amplifiers produced by National Semiconductor Corporation. Resistors **30A** through **30H** can have the values of 10 kilohms, 20 kilohms, 40 kilohms, 80 kilohms, 160 kilohms, 320 kilohms, 640 kilohms, and 1.28 megohms, respectively, to accomplish the desired low power operation at an adequate speed.

Those skilled in the art will easily recognize that the low power analog to digital converter **8** operates generally in the following fashion. Oscillator **25** continually produces a relatively slow clocking signal causing up/-down counter **27A** to count either up or down, depending on the state of conductor **33**. The two four-bit counters **27A** and **27B** are connected to operate as a

single eight-bit up/down counter. The outputs of the up/down counters **27A** and **27B** continue to switch the upper terminals of the resistors **30A** to **30H** to various particular positive voltage supplied inside the analog switch circuits **29A** and **29B** developing this voltage across various ones of the resistors, since summing current node **31** is held at a virtual ground by operational amplifer **32**. When the summing current produced by resistors **30A** through **30H** equals the current being drawn out of summing node conductor **31** by operational amplifier **34** in response to the temperature sensing diode **38**, the voltage level on conductor **33** is changed, changing the direction of counting of the up/down counters **27A** and **27B**. From then on, the least significant bit of the digital output conductors **28** will vary with each count of oscillator **25**, about the value which represents the appropriate amount of magnetic bias field compensation needed to be produced by Z coil **3** at the present temperature.

Digital to analog converter **12** of FIG. **1** can be implemented by using part of circuitry of analog to digital converter of FIG. **2**, as follows. The digital input conductors **11** (FIG. **1**) on which the temperature compensation data from programmable read only memory **10** are produced are applied to the eight digital inputs of analog switch circuits such as **29A** and **29B**. They produce a summing current on conductor such as **31**, which can be connected to conductor **13** in FIG. **1** and an appropriate resistance in order to generate an analog signal that corresponds to the digital temperature compensation data word selected from programmable read only memory **10**, to thereby determine the appropriate amount of adjustment of the drive current to be applied by transistor **15** to Z coil **3**.

Other commercially available analog to digital converters and digital to analog converters than the ones described above can be used, but they may not have as low power dissipation as the analog to digital converters described above.

It is to be emphasized that low overall power dissipation of the circuit shown in FIG. **1** is very important, because it is necessary to have minimum size back up storage capacitors **49** to supply the power during transferring of data from the high speed CMOS memory **41** of FIG. **4** to the bubble memory storage system **2** of FIG. **1** during a power interruption of the main operating power system.

Next, a non-volatile high speed semiconductor random access memory system will be described with reference to FIG. **4**, wherein hybrid memory **40** includes a "back-up" bubble memory designated by reference numeral **42**. Reference numeral **43** designates the bidirectional data bus coupling CMOS RAM (Random Access Memory) **41** to bubble memory **42**. As will be subsequently described in more detail, normally the computer carries on its operations by accessing CMOS **41** as its mainframe memory. However, since CMOS **41** is volatile, whenever there is a power failure the hybrid memory **40** rapidly transfers the entire contents of CMOS **41** to non-volatile bubble memory **42**. A bank of energy storage capacitors **49** supplies enough energy to maintain the voltage supply lines of CMOS memory **41**, bubble memory **42**, and the other circuitry shown in FIG. **4** within a predetermined voltage range long enough to allow this transfer of data to be accomplished. Conductor **45** supplies the necessary five volts to CMOS memory **41**. Conductor **46** supplies the necessary operating voltage to bubble memory **42**. The voltages on conductors **45** and **46** normally receive their operating power from the main power bus **52**.

However, during a power failure in which the power on main power bus **52** is interrupted, the voltage and energy stored on the capacitors in capacitor bank **49** is coupled by means of conductor **48** to voltage down converter circuit **47**. Voltage down converter cirucit **47** maintains the proper operating voltages on conductors **45** and **46** to permit complete transfer of data in CMOS RAM **41** to bubble memory **42**.

The energy stored on the capacitors in capacitor bank **49** necessarily is initially at a very high voltage, typically approximately 100 volts. As the data transfer from CMOS RAM **41** to bubble memory **42** progresses, the voltage across the capacitors **49** "falls off". Voltage down converter circuit **47**, subsequently described in detail with reference to FIG. **5**, accomplishes the conversion of this decreasing voltage on conductor **48** to the precise, regulated operating voltage or voltages needed on conductors **45** and **46**.

Control signals from control bus **44** perform the necessary logic and gating functions needed to regulate and apply the voltage on main power bus **52** to conductors **45** and **46** during normal operation. However, in the event of an interruption of the main power on bus **52**, conductors **45** and **46** are operatively connected to circuitry in voltage down converter circuit **47** so that the high but decreasing voltage level on conductor **48** is converted to the precise regulated operating voltages on conductors **45** and **46**.

A "voltage up" converter circuit **51** boosts the normal operating voltage on main power bus **52** to produce the 100 volts needed to charge up capacitor bank **49** and thereby store enough energy in case of a power failure. The details of voltage up converter circuit **51** are shown in FIG. **5**.

Control circuitry **53** receives control inputs such as control and address inputs from the computer and generates the necessary signals on bus **44** to effectuate proper operation of voltage up converter circuit **51** during normal memory operation, and to also effectuate proper operation of voltage down converter circuit **47** to achieve the desired data transfer between CMOS RAM **41** and bubble memory **42** during a power interruption.

After power is restored following an interruption which results in transfer of data from CMOS RAM **41** to bubble memory **42**, the control circuitry **53** automatically generates the necessary address and control signals on bus **44** to reload all of the data in bubble memory **42** back into its original locations in CMOS RAM **41** so that the computer can continue its operation.

Thus, the CMOS-bubble hybrid memory module **40** has essentially the same "black box" characteristics as a core memory having the same organization and data storage capacity.

The details of voltage up converter **51** of FIG. **4** and the details of voltage down converter circuit **47** of FIG. **4** are shown in FIG. **5**.

Referring to FIG. **5**, voltage up converter circuit **51** includes an MOS field effect transistor **59** (which can be a Siliconix VN2222L) having its source connected to ground conductor **18** and its drain connected by means of conductor **62** to one input of a two input NAND gate **64** and to one terminal of a resistor **63**, the other terminal of which is connected to voltage supply conductor **76**. The gate electrode of field effect transistor **59** is connected by means of conductor **61** to one terminal of

resistor **60**, the other terminal of which is connected to ground. Conductor **61** also is connected to the anode of a 100 volt Zener diode **75**, the cathode of which is connected to conductor **74**. Conductor **74** is also connected to one terminal of the capacitors **49** of the capacitor bank (which is also designated by reference numeral **49** in FIG. **4**). The other terminals of capacitors **49** are connected to ground conductor **18**. Thus, voltage up converter **51** charges capacitors **49** up to approximately +100 volts.

The output of NAND gate **64** is coupled by means of conductor **65** to both inputs of a two input NAND gate **67**, which is connected to function as an inverter. Gates **64** and **67** can be implemented by Motorola MC14011 CMOS integrated circuits. The output of inverter **67** is connected by means of conductor **68** to the gate electrode of a MOS field effect transistor **71** and to one electrode of a capacitor **69**. The other electrode of capacitor **69** is connected back to the other input of NAND gate **64** and also to one terminal of resistor **70**, the other terminal of which is connected to ground conductor **18**. Capacitor **69** can have a capacitance of 100 picofarads.

Field effect transistor **71** can be a Siliconix 2N6658. The source electrode of field effect transistor **71** is connected to ground conductor **18**, and the drain electrode is connected to the "dotted" terminal of primary winding **72A** of a transformer **72**. The "undotted" terminal of primary winding **72A** is connected to the +5 volt power supply conductor **76**. The "undotted" terminal of secondary winding **72B** of transformer **72** is connected to ground, and its "dotted" terminal is connected to the anode of diode **73**, the cathode of which is connected to conductor **74**.

Still referring to FIG. **5**, voltage down converter circuit **47** receives as its input the initial +100 volts stored on energy storage capacitors **49** and applies it to the emitter of a PNP transistor **81**, which can be an RCA 2N6212. The base of transistor **81** is coupled by resistor **80** to conductor **74** and also to the emitter of a second PNP transistor **77**, which can be an RCA 2N5415. The base of transistor **77** is coupled by resistor **78** to conductor **74** and also by means of resistor **83** to conductor **79**. The collectors of both transistors **77** and **81** are connected to conductor **82**.

Conductor **79** is connected to the drain of MOS field effect transistor **84**, which has its source connected to ground conductor **18**. Field effect transistor **84** can be a Siliconix VN2410M. The gate electrode of field effect transistor **84** is connected to the output of an LM139 comparator **85**. The negative input of amplifier **85** is connected to conductor **88**, which is coupled by means of resistor **89** to ground conductor **18** and by means of resistor **90** to conductor **92**, on which a regulated +15 volt output voltage is produced as a result of energy drained off of capacitors **49** during a power failure that necessitates transfer of data from CMOS memory **41** to bubble memory **42**.

The positive input of comparator **85** is connected by conductor **101** to the cathode of Zener diode **87** which can be an LM113 by National Semiconductor. The anode of Zener diode **87** is connected to ground. The positive input of amplifier **85** is also coupled by resistor **86** to the +5 volt power supply.

Conductor **92** is coupled to one terminal of capacitor **91**, which can have a value of 100 microfarads. The other terminal of capacitor **91** is connected to ground. Conductor **92** is also connected to inductor **93**, which can be a non-saturing core inductor having an inductance of 100 microhenries. The other terminal of inductor **93** is connected to conductor **82** and to the cathode of diode **94**. The anode of diode **94** is connected to ground.

The operation of the voltage up converter circuit **51** of FIG. **5A** is relatively simple. NAND gate **64** and inverter **67** are connected as a ring counter that continuously oscillates as long as a high level is present on conductor **62**, which functions as an enable circuit for the ring oscillator. The output of inverter **67**, produced on conductor **68**, turns field effect transistor **71** abruptly on and off, causing transformer **72**, which has a turns ratio of apprximately 1:2, to produce an amplified signal at the "dotted" output of winding **72B**. This amplified signal is rectified by diode **73** and charges up capacitors **49**. When the voltage on conductor **74** exceeds 100 volts, 100 volt avalanche diode **75** breaks down in the reverse direction. Further increases in the voltage on conductor **74** raise the voltage on conductor **61**, turning on field effect transistor **59**, pulling down the voltage on conductor **62** and thereby disabling the ring oscillator. Operation of the circuitry continues in this fashion as necessary to maintain approximately 100 volts on conductor **74**.

The operation of down converter circuit **47** also is relatively straight-forward. PNP transistors **77** and **81** act as a valve that supplies the voltage on capacitors **49** to output conductor **92** through inductor **93**. Inductor **93** performs a filtering function. The voltage on conductor **92**, which is actually the output voltage produced on one or both of conductors **45** and **46** of FIG. **4**, is divided by the ratio of resistors **89** and **90** to produce a control signal that is applied to the negative input of amplifier **85**. The other input of amplifier **85** is connected to a reference voltage which is the reverse breakdown voltage of Zener diode **87**. An exemplary value of resistor **90** is seven kilohms and a exemplary value of resistor **90** is one kilohm. When the voltage on conductor **88**, the junction between resistors **89** and **90**, exceeds the breakdown voltage of Zener diode **87**, a low level is produced on the gate input of field effect transistor **84**. Field effect transistor **84** is thereby maintained in a sufficiently "on" condition to cause PNP transistors **77** and **81** to precisely maintain a regulated output voltage on conductor **92**. This regulated output voltage is equal to the breakdown voltage of Zener diode **87**, scaled up by the ratio of resistors **89** and **90**. Capacitor **91** performs the function of filtering the regulated output voltage on conductor **92**. Diode **94** is a conventional 2N5802 used here in a fly back configuration. It allows the energy stored in inductor **93** to "dump" into capacitor **91** when transistor **81** turns off.

The above-described Hybrid CMOS/bubble memory system with its novel bias field correction system makes possible a very efficient design of the CMOS control circuitry **53** and the control circuitry associated with the non-volatile bubble memory system **42**, so that a capacitor bank **49** having a relatively small physical size can be utilized to supply enough power to effectuate a complete transfer of the entire contents of CMOS RAM **41** to bubble memory system **42** in the event of a power interruption, thereby making the entire memory system non-volatile, in effect. It is believed that the above design can be implemented with a total capacitor bank capacitance of approximately 10,000 microfarads for a one million bit CMOS RAM. The entire one million bit memory system can be packaged in a module having the

same dimensions as a typical one million bit core memory module, i.e., six inches high by nine inches wide by 1.4 inches deep. The high speed, low power CMOS memory is capable of faster operation that the core memory module that it replaces, and can be used as a plug-in replacement for that module.

While the invention has been described with reference to a particular embodiment thereof, those skilled in the art will be able to make various modifications to the described embodiment of the invention without departing from the true spirit and scope thereof. It is intended that all variations in the described apparatus and method that perform substantially the same work in substantially the same way to achieve substantially the same result are encompassed within the scope of the invention.

I claim:

1. A method of operating a bubble memory system, said method comprising the steps of:

(a) subjecting said bubble memory system to a plurality of different temperatures and, at each of said temperatures, changing a magnetic bias field influencing a bubble memory chip of said bubble memory system to a value that optimizes operation of said bubble memory system in a predetermined manner;

(b) storing digital temperature compensation data numbers representative of the amount of said change of said magnetic bias field at each of said temperatures in individually addressable locations of a memory, respectively;

(c) sensing a temperature indicative of the present temperature of said bubble memory chip during operation of said bubble memory system to produce a first analog signal;

(d) converting said first analog signal to a first digital number representative of the present temperature of said bubble memory chip;

(e) accessing said memory in response to said first digital number to obtain a first one of said temperature compensation data numbers;

(f) converting said first temperature compensation number to an analog output signal representative of the amount of correction needed in said magnetic bias field at said present temperature; and

(g) changing said magnetic bias field by a predetermined amount corresponding to the level of said analog output signal.

2. The method of claim **1** wherein step (f) includes writing said digital data numbers into separately addressable locations of a programmable read only memory.

3. The method of claim **1** wherein step (d) includes using a CMOS analog to digital converter to produce said first digital number.

4. The method of claim **3** wherein step (f) includes using a CMOS digital to analog converter to produce said analog output signal.

5. The method of claim **4** wherein step (g) includes varying the current through a Z coil that alters said magnetic bias field, in response to said analog output signal.

6. The method of claim **1** including using a magnetic sensor to sense the strength of said magnetic bias field to produce a second analog signal and further adjusting the value of said analog output signal in response to said second analog signal.

7. A system for temperature compensating a bubble memory system, said bubble memory system including a bubble memory chip, said system comprising:

(a) memory means for storing digital temperature compensation data numbers representative of an amount of change of a magnetic bias field influencing said bubble memory chip at each of a plurality of temperatures in individually addressable locations of said memory means, each of said temperature compensation data numbers representing an amount of change in said magnetic bias field needed to optimize operation of said bubble memory system at a respective one of said temperatures in a predetermined manner;

(b) means for sensing a temperature indicative of the present temperature of said bubble memory chip during operation of said bubble memory system to produce a first analog signal;

(c) means for converting said first analog signal to a first digital number representative of the present temperature of said bubble memory chip;

(d) means for effectuating accessing of said memory means in response to said first digital number to obtain a first one of said temperature compensation data numbers;

(e) means for converting said first temperature compensation number to a second analog signal representative of the amount of correction needed in said magnetic bias field at said present temperature; and

(f) means for changing said magnetic field by a predetermined amount in response to said second analog signal.

8. The system of claim **7** wherein said memory means includes a programmable read only memory.

9. The system of claim **8** wherein said first analog signal converting means includes an analog to digital converter for converting said first analog signal to said first digital number, and means for applying said first digtal number to address inputs of said programmable read only memory.

10. The system of claim **9** wherein said first temperature compensation number means includes a digital to analog converter for producing said second analog signal, and means coupled to data outputs of said programmable memory for coupling said first temperature compensation number to the digital inputs of said digital to analog converter.

11. The system of claim **10** wherein said magnetic field changing means includes a Z coil influencing a Z magnetic field to which said bubble memory chip is subjected and current driving means responsive to said second analog signal for producing a current in said Z coil which produces a predetermined adjustment in said Z magentic field.

* * * * *