US007490177B2

(12) **United States Patent**
Kao

(10) **Patent No.: US 7,490,177 B2**
(45) **Date of Patent: Feb. 10, 2009**

(54) **SYSTEM METHOD FOR PERFORMING A DIRECT MEMORY ACCESS FOR AUTOMATICALLY COPYING INITIALIZATION BOOT CODE IN A NEW MEMORY ARCHITECTURE**

(75) Inventor: **Rom-Shen Kao**, Durham, NC (US)

(73) Assignee: **Infineon Technologies AG**, Munich (DE)

(*) Notice: Subject to any disclaimer, the term of this patent is extended or adjusted under 35 U.S.C. 154(b) by 212 days.

(21) Appl. No.: **11/337,754**

(22) Filed: **Jan. 23, 2006**

(65) **Prior Publication Data**

US 2007/0174602 A1 Jul. 26, 2007

(51) **Int. Cl.**
G06F 13/00 (2006.01)

(52) **U.S. Cl.** **710/22**; 710/8; 710/9; 710/10; 710/33; 710/34; 713/100; 713/1

(58) **Field of Classification Search** 710/8–10, 710/22, 33, 34; 713/1, 100
See application file for complete search history.

(56) **References Cited**

U.S. PATENT DOCUMENTS

5,515,333 A * 5/1996 Fujita et al. 365/229
6,134,631 A 10/2000 Jennings, III
6,704,840 B2 * 3/2004 Nalawadi et al. 711/118
6,972,977 B1 * 12/2005 Urabe 365/49.11
7,139,909 B2 * 11/2006 Lee 713/100
7,221,615 B2 5/2007 Wallner et al.
2003/0014688 A1 1/2003 Wu
2003/0028733 A1 * 2/2003 Tsunoda et al. 711/154
2005/0027928 A1 2/2005 Avraham et al.
2006/0294295 A1 12/2006 Fukuzo
2007/0028030 A1 2/2007 Mahrla et al.
2007/0033487 A1 2/2007 Ruckerbauer et al.
2007/0076004 A1 4/2007 Wallner et al.
2007/0186061 A1 8/2007 Oh et al.
2008/0007569 A1 1/2008 Kao
2008/0010418 A1 1/2008 Kao
2008/0010419 A1 1/2008 Kao
2008/0010420 A1 1/2008 Kao

FOREIGN PATENT DOCUMENTS

CN 1673959 9/2005

OTHER PUBLICATIONS

State Intellectual Property Office of P.R.C. Office Action dated Jul. 4, 2008, for counterpart application No. 200710004042.2.

* cited by examiner

Primary Examiner—Tammara Peyton
(74) *Attorney, Agent, or Firm*—Patterson & Sheridan, L.L.P.

(57) **ABSTRACT**

Embodiments of the invention provide a method and apparatus for initializing a computer system, wherein the computer system includes a processor, a volatile memory, and a non-volatile memory. In one embodiment, the method includes, when the computer system is initialized, automatically copying initialization code stored in the non-volatile memory to the volatile memory, wherein circuitry in the volatile memory automatically creates the copy, and executing, by the processor, the copy of the initialization code from the volatile memory.

11 Claims, 8 Drawing Sheets

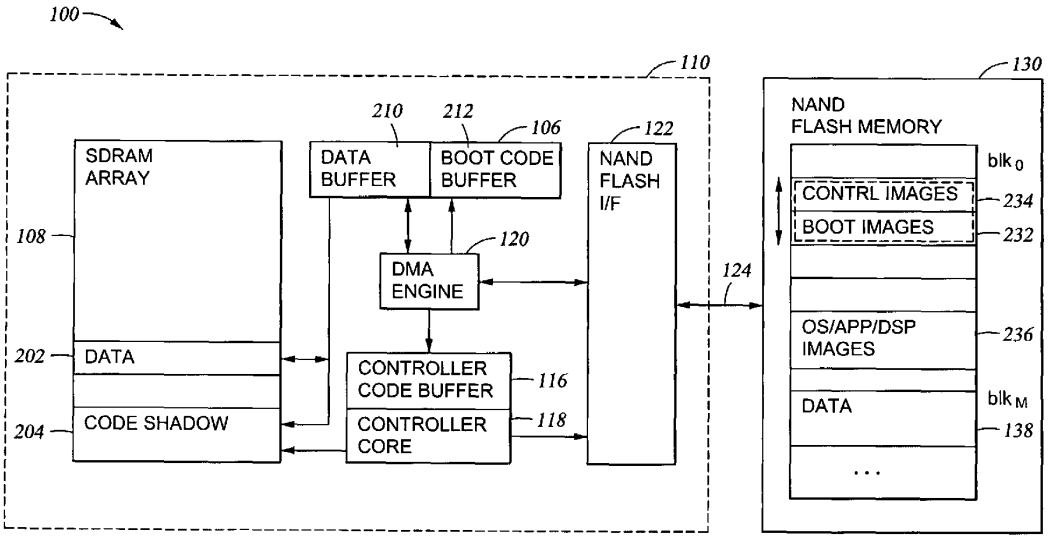

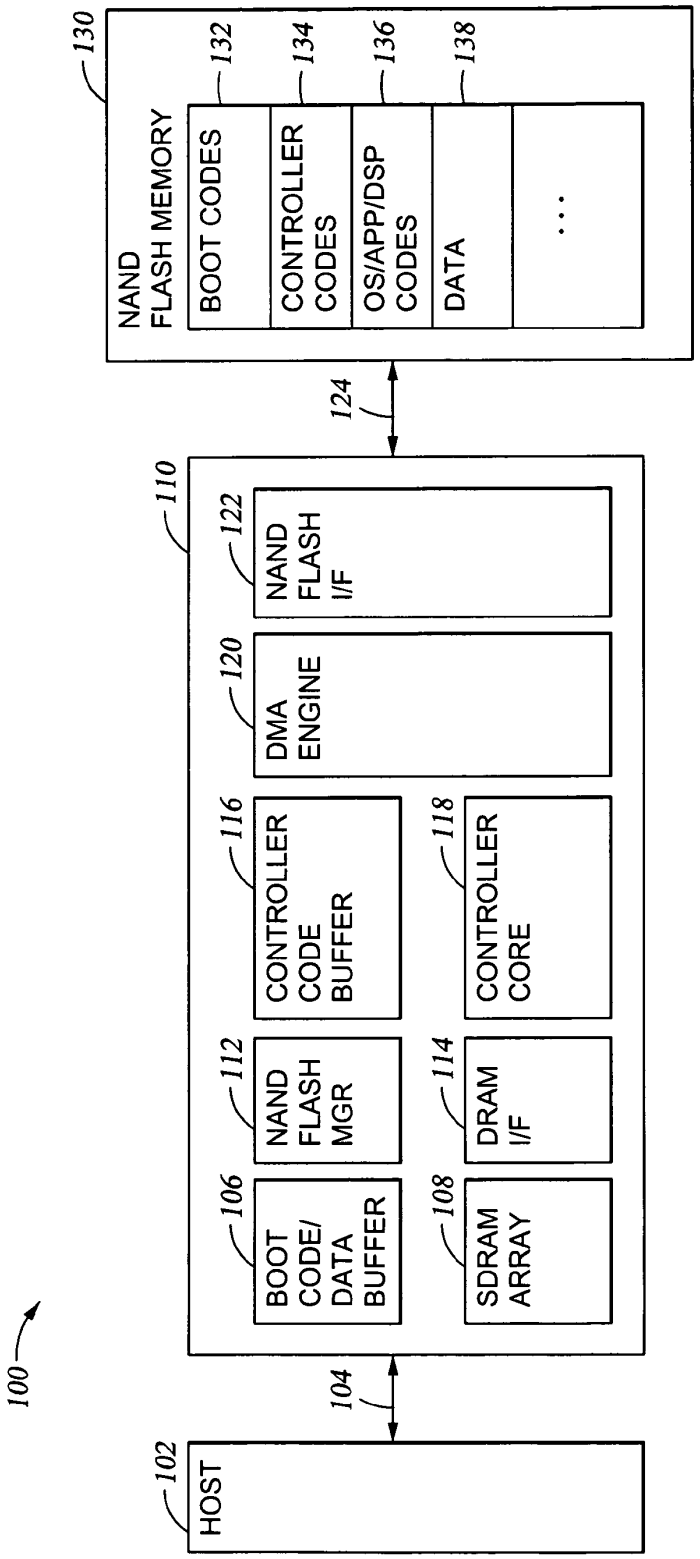
100
102
HOST
104
110
106
BOOT CODE/ DATA BUFFER
112
NAND FLASH MGR
116
CONTROLLER CODE BUFFER
108
SDRAM ARRAY
114
DRAM I/F
118
CONTROLLER CORE
120
DMA ENGINE
122
NAND FLASH I/F
124
130
NAND FLASH MEMORY
132
BOOT CODES
134
CONTROLLER CODES
136
OS/APP/DSP CODES
138
DATA
. . .

Fig. 1

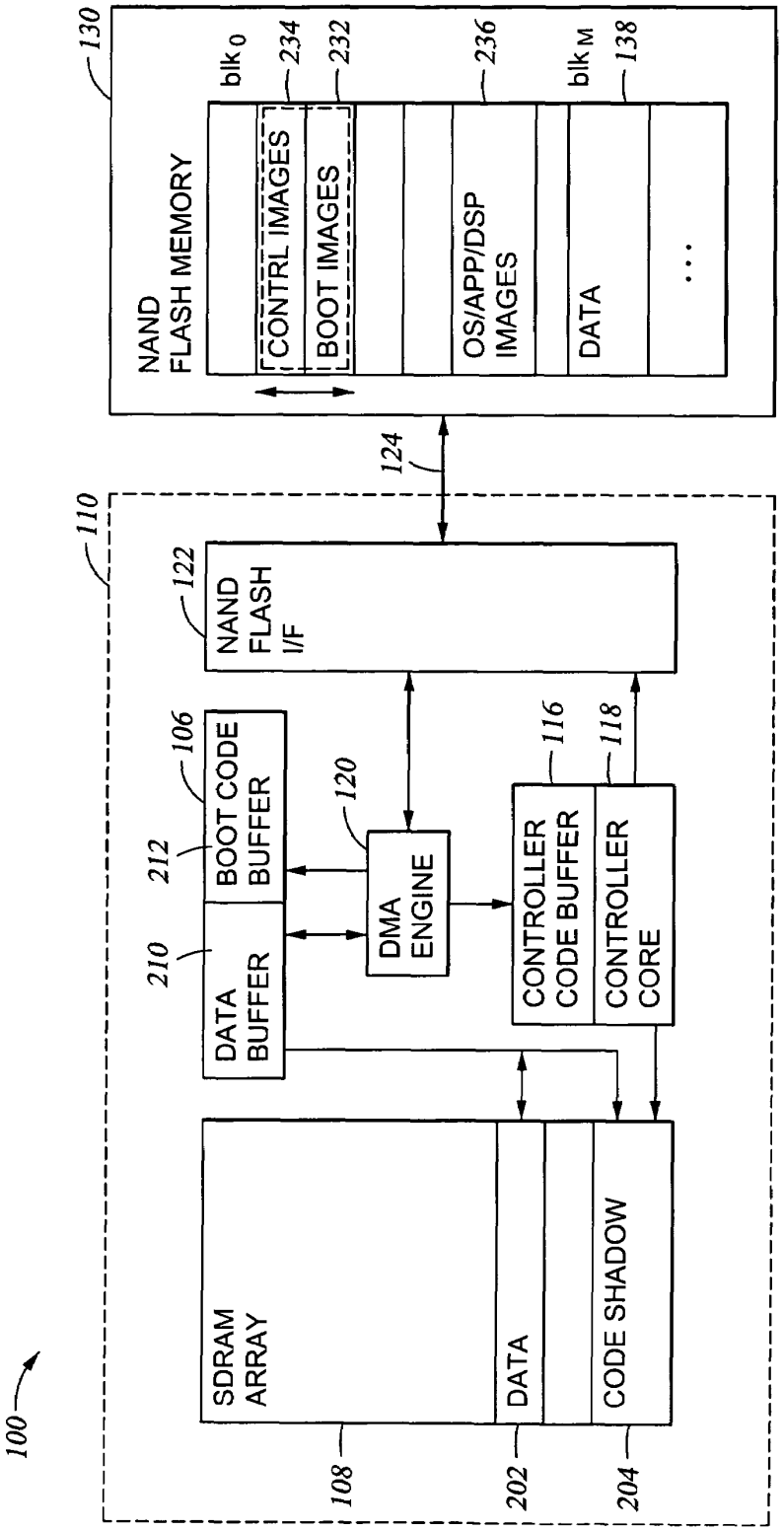
100
130
NAND FLASH MEMORY
blk 0
234
CONTRL IMAGES
232
BOOT IMAGES
236
OS/APP/DSP IMAGES
blk M
138
DATA
124
110
122
NAND FLASH I/F
106
BOOT CODE BUFFER
212
120
DMA ENGINE
210
DATA BUFFER
116
CONTROLLER CODE BUFFER
118
CONTROLLER CORE
SDRAM ARRAY
DATA
CODE SHADOW
108
202
204

Fig. 2

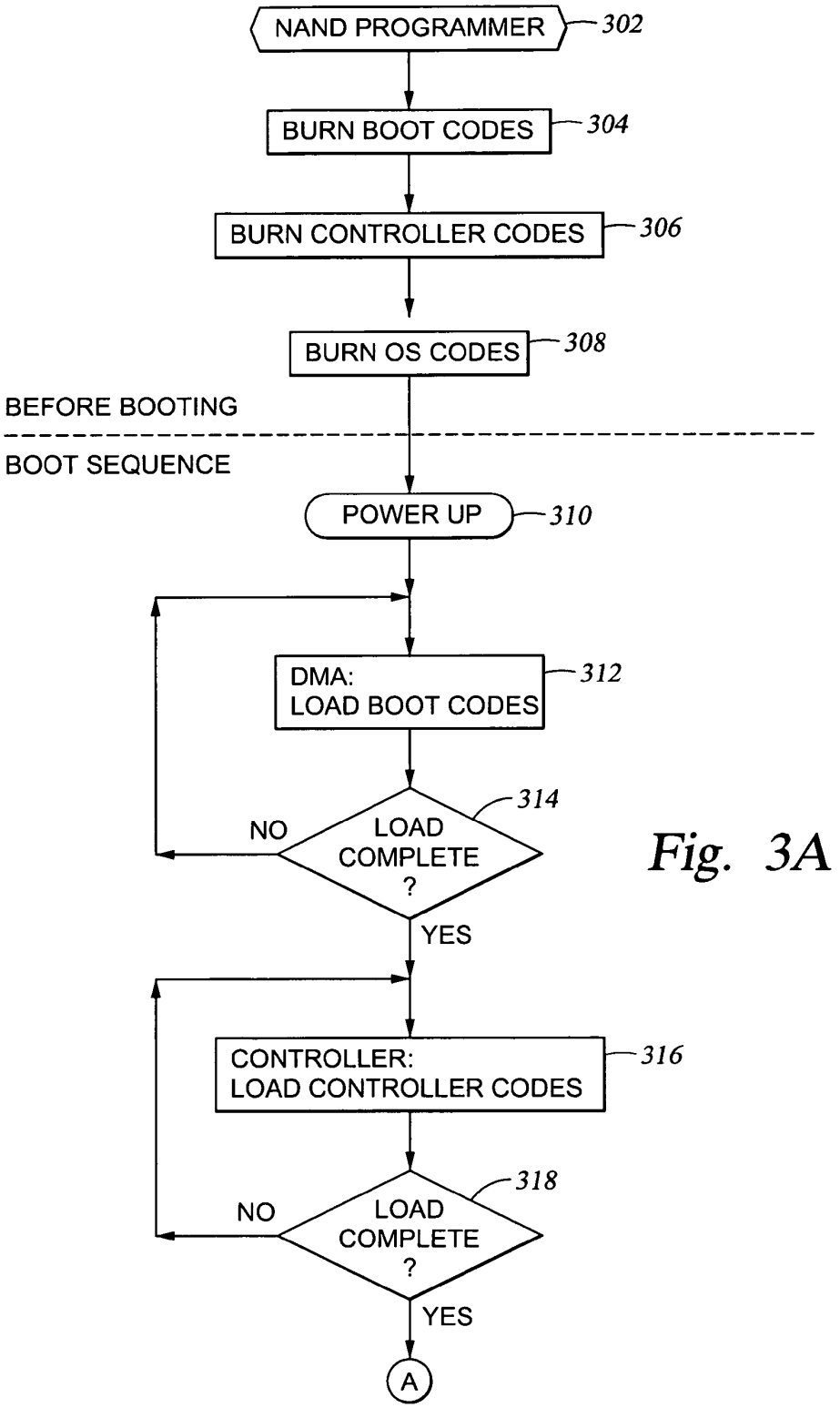
NAND PROGRAMMER
302
BURN BOOT CODES
304
BURN CONTROLLER CODES
306
BURN OS CODES
308
BEFORE BOOTING
BOOT SEQUENCE
POWER UP
310
DMA:
LOAD BOOT CODES
312
LOAD
COMPLETE
?
314
NO
YES
CONTROLLER:
LOAD CONTROLLER CODES
316
LOAD
COMPLETE
?
318
NO
YES
A

Fig. 3A

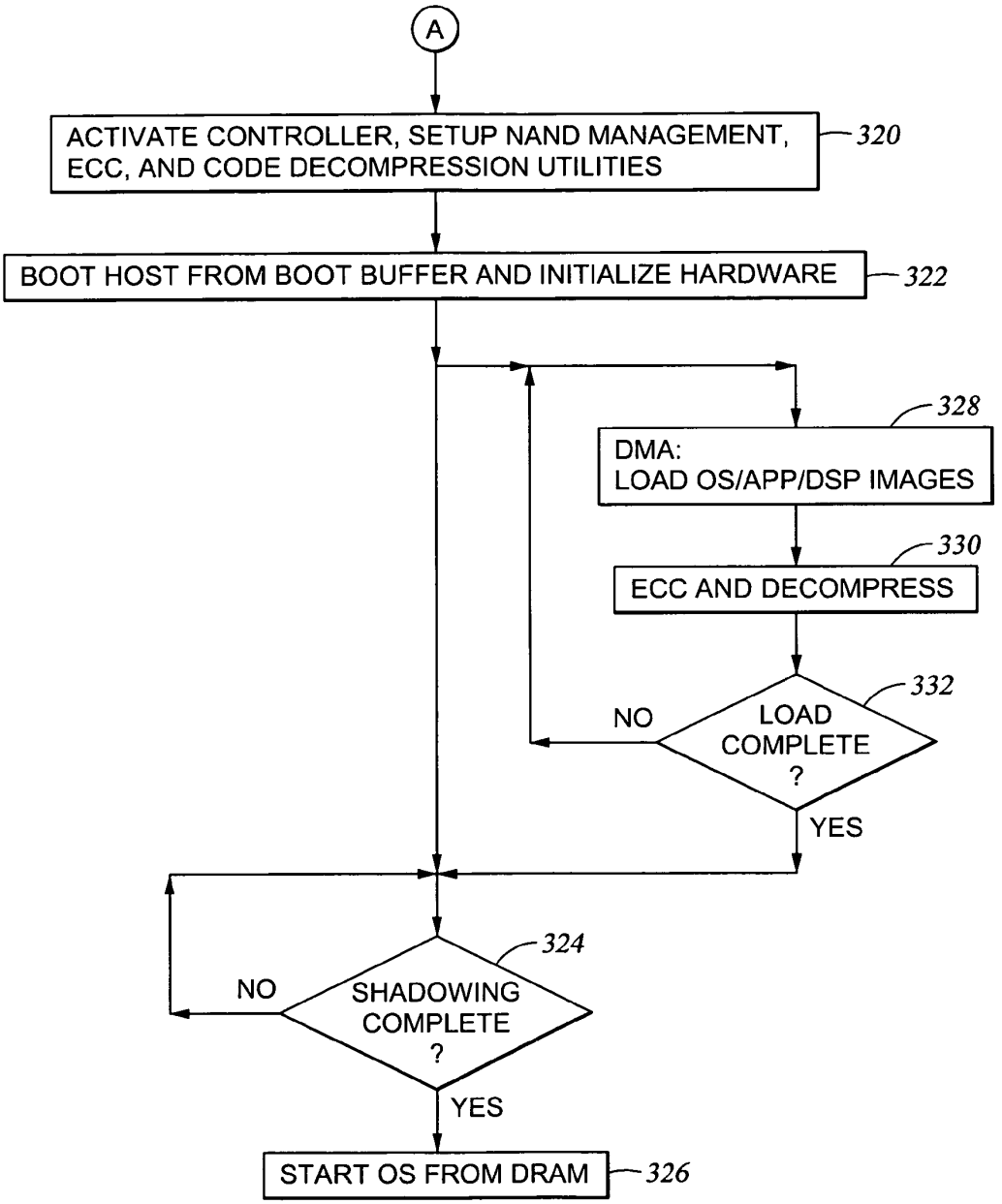
A
ACTIVATE CONTROLLER, SETUP NAND MANAGEMENT, ECC, AND CODE DECOMPRESSION UTILITIES
320
BOOT HOST FROM BOOT BUFFER AND INITIALIZE HARDWARE
322
328
DMA: LOAD OS/APP/DSP IMAGES
330
ECC AND DECOMPRESS
332
LOAD COMPLETE ?
NO
YES
324
SHADOWING COMPLETE ?
NO
YES
START OS FROM DRAM
326

Fig. 3B

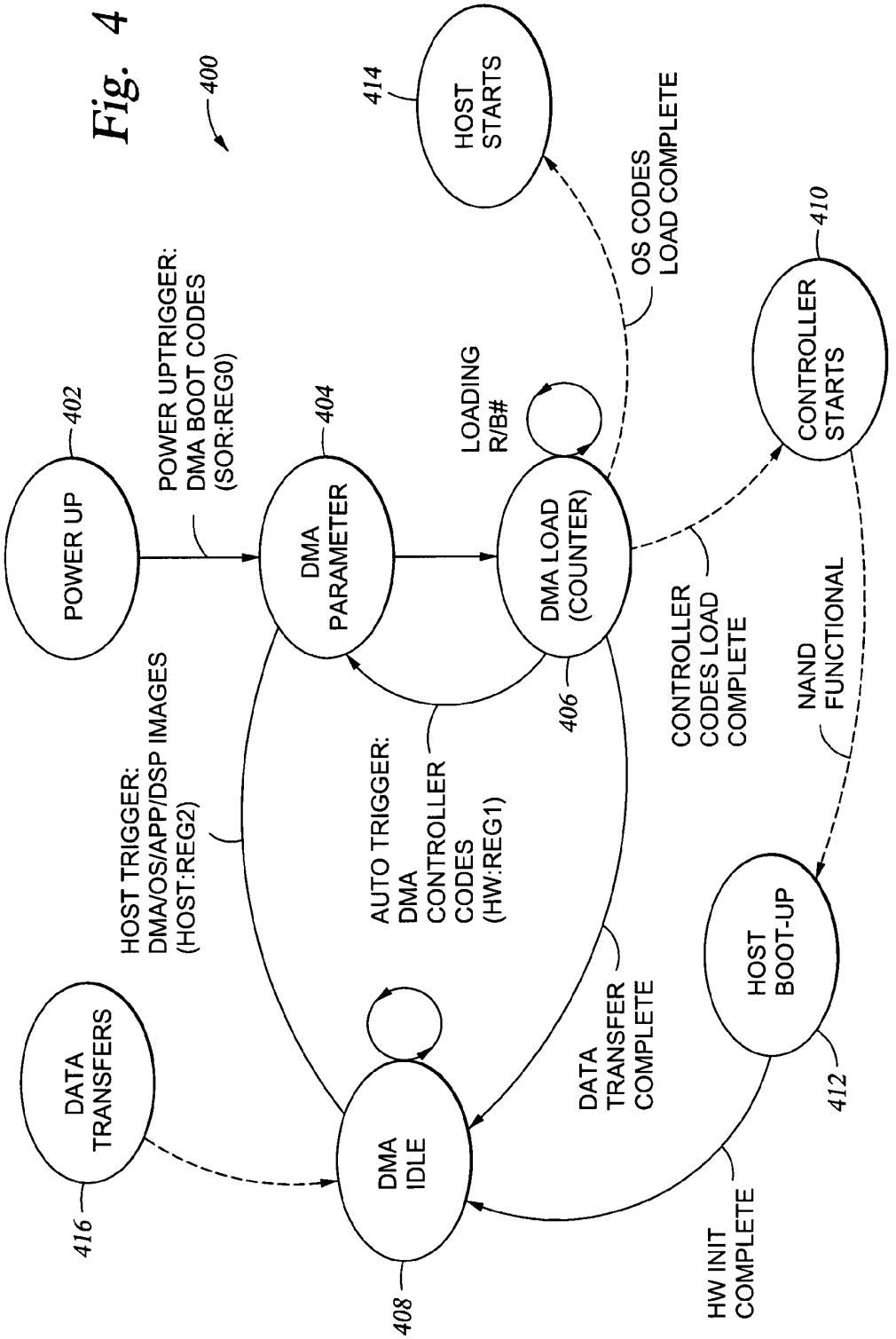
400
402
POWER UP
POWER UPTRIGGER:
DMA BOOT CODES
(SOR:REG0)
404
DMA
PARAMETER
LOADING
R/B#
DMA LOAD
(COUNTER)
406
414
HOST
STARTS
OS CODES
LOAD COMPLETE
410
CONTROLLER
STARTS
CONTROLLER
CODES LOAD
COMPLETE
NAND
FUNCTIONAL
HOST TRIGGER:
DMA/OS/APP/DSP IMAGES
(HOST:REG2)
AUTO TRIGGER:
DMA
CONTROLLER
CODES
(HW:REG1)
DATA
TRANSFER
COMPLETE
HOST
BOOT-UP
412
416
DATA
TRANSFERS
408
DMA
IDLE
HW INIT
COMPLETE

Fig. 4

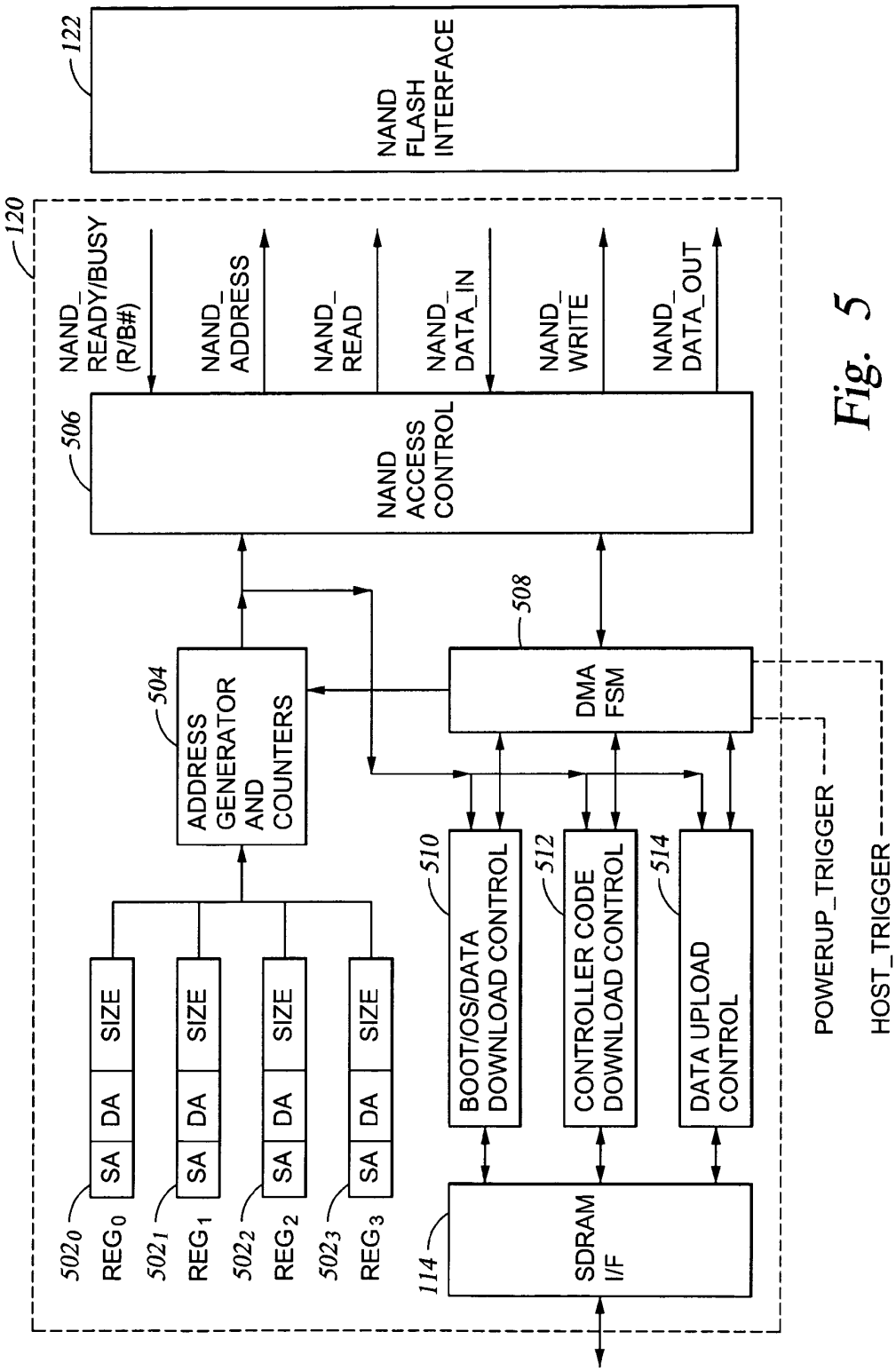
122
NAND FLASH INTERFACE
120
NAND_ READY/BUSY (R/B#)
NAND_ ADDRESS
NAND_ READ
NAND_ DATA_IN
NAND_ WRITE
NAND_ DATA_OUT
506
NAND ACCESS CONTROL
508
DMA FSM
504
ADDRESS GENERATOR AND COUNTERS
510
BOOT/OS/DATA DOWNLOAD CONTROL
512
CONTROLLER CODE DOWNLOAD CONTROL
514
DATA UPLOAD CONTROL
POWERUP_TRIGGER
HOST_TRIGGER
502₀ REG₀
502₁ REG₁
502₂ REG₂
502₃ REG₃
SA
DA
SIZE
114
SDRAM I/F

Fig. 5

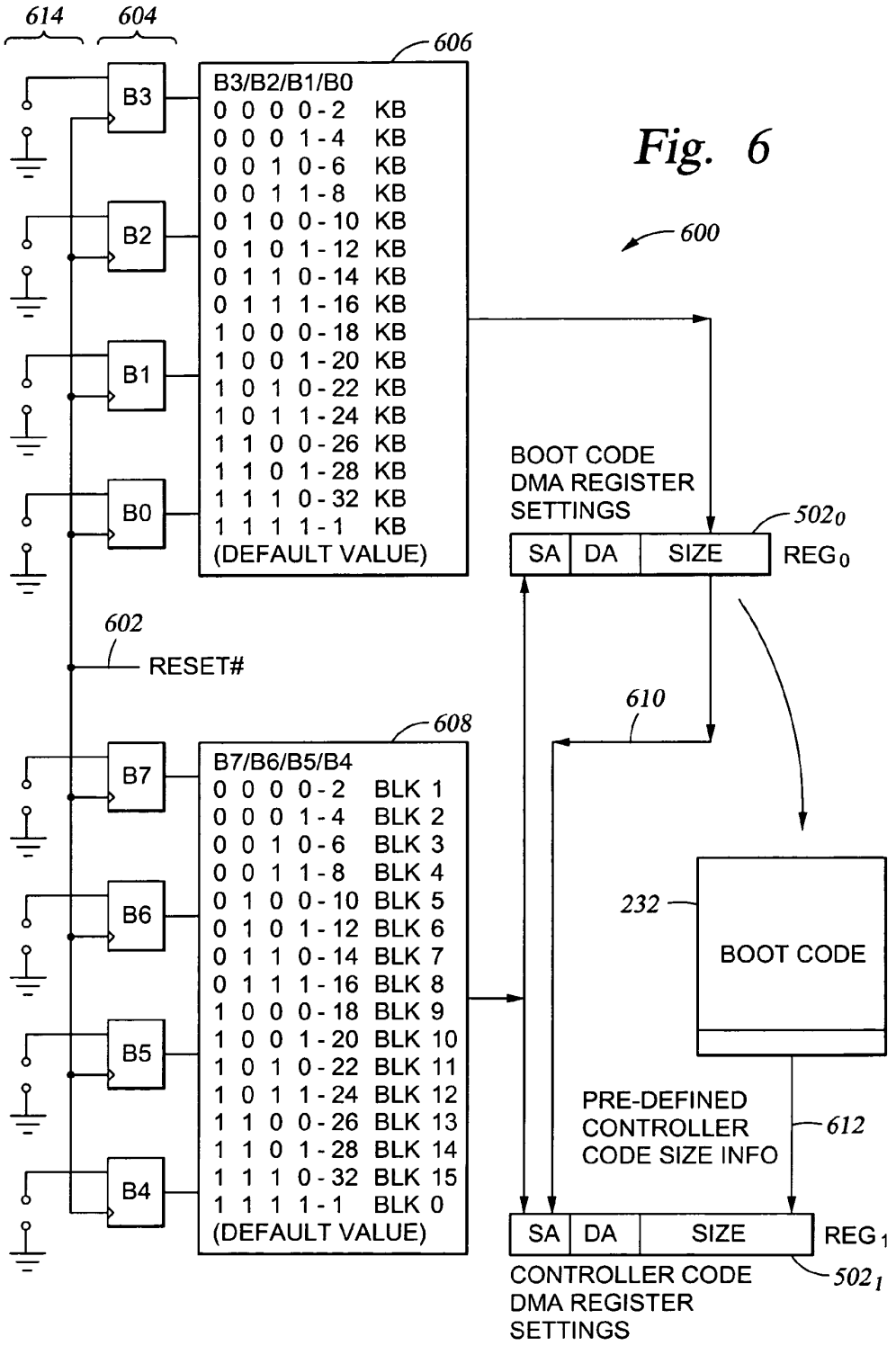
614
604
606
B3
B2
B1
B0
B3/B2/B1/B0
0 0 0 0 - 2 KB
0 0 0 1 - 4 KB
0 0 1 0 - 6 KB
0 0 1 1 - 8 KB
0 1 0 0 - 10 KB
0 1 0 1 - 12 KB
0 1 1 0 - 14 KB
0 1 1 1 - 16 KB
1 0 0 0 - 18 KB
1 0 0 1 - 20 KB
1 0 1 0 - 22 KB
1 0 1 1 - 24 KB
1 1 0 0 - 26 KB
1 1 0 1 - 28 KB
1 1 1 0 - 32 KB
1 1 1 1 - 1 KB
(DEFAULT VALUE)
600
BOOT CODE
DMA REGISTER
SETTINGS
502₀
SA
DA
SIZE
REG₀
602
RESET#
610
608
B7
B6
B5
B4
B7/B6/B5/B4
0 0 0 0 - 2 BLK 1
0 0 0 1 - 4 BLK 2
0 0 1 0 - 6 BLK 3
0 0 1 1 - 8 BLK 4
0 1 0 0 - 10 BLK 5
0 1 0 1 - 12 BLK 6
0 1 1 0 - 14 BLK 7
0 1 1 1 - 16 BLK 8
1 0 0 0 - 18 BLK 9
1 0 0 1 - 20 BLK 10
1 0 1 0 - 22 BLK 11
1 0 1 1 - 24 BLK 12
1 1 0 0 - 26 BLK 13
1 1 0 1 - 28 BLK 14
1 1 1 0 - 32 BLK 15
1 1 1 1 - 1 BLK 0
(DEFAULT VALUE)
232
BOOT CODE
PRE-DEFINED
CONTROLLER
CODE SIZE INFO
612
SA
DA
SIZE
REG₁
CONTROLLER CODE
DMA REGISTER
SETTINGS
502₁

Fig. 6

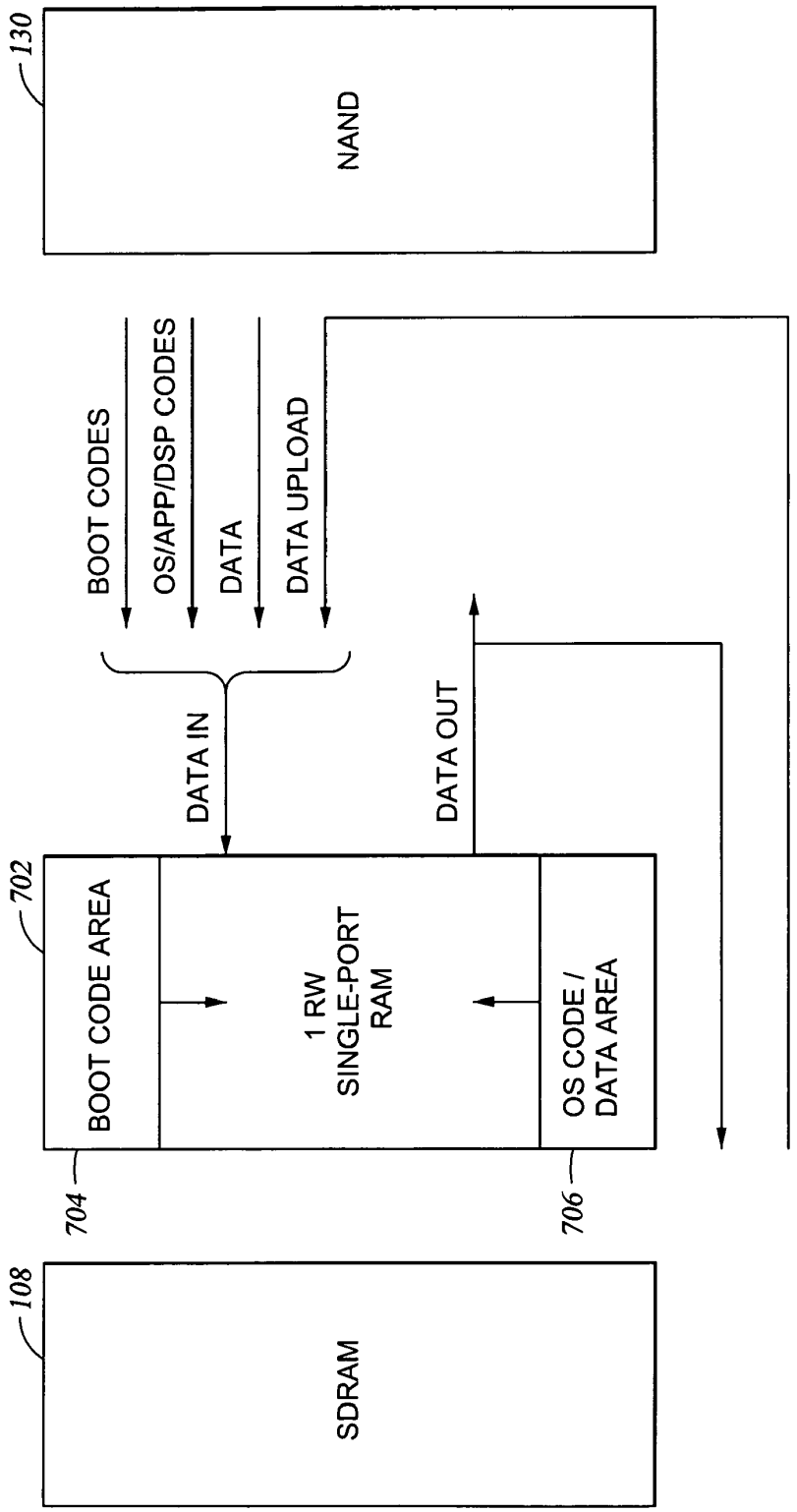
130
NAND
BOOT CODES
OS/APP/DSP CODES
DATA
DATA UPLOAD
DATA IN
DATA OUT
702
BOOT CODE AREA
1 RW
SINGLE-PORT
RAM
OS CODE /
DATA AREA
704
706
108
SDRAM

Fig. 7

SYSTEM METHOD FOR PERFORMING A DIRECT MEMORY ACCESS FOR AUTOMATICALLY COPYING INITIALIZATION BOOT CODE IN A NEW MEMORY ARCHITECTURE

BACKGROUND OF THE INVENTION

1. Field of the Invention

The invention generally relates to initialization of a computer system. Specifically, the invention relates to an improved memory architecture for booting a computer system.

2. Description of the Related Art

Many modern electronic devices such as cell phones, PDAs, portable music players, appliances, and so on typically incorporate an embedded computer system. An embedded computer system typically contains a computer processor (referred to as a host), non-volatile memory (such as a flash memory and/or ROM memory), and volatile memory such as a dynamic random access memory (DRAM). The host may include a central processing unit (CPU), digital signal processor (DSP), microcontroller unit (MCU) or direct memory access (DMA) data transmission device.

During operation, a host typically runs an operating system or other operating code. Because volatile memory may typically be accessed more quickly than non-volatile memory, the operating code may be stored in the volatile memory and accessed from the volatile memory by the host. However, because volatile memory requires a power source to maintain data stored therein, when the embedded system is powered down, the volatile memory is typically erased. Accordingly, when the embedded system is powered up (e.g., when the embedded system enters a reset state), the operating code required by the host system is typically loaded into the volatile memory. Typically, the operating code is loaded from the nonvolatile memory (e.g., a ROM and/or flash memory) which retains stored data even when the embedded system is not being powered. The process of loading code stored in non-volatile memory into volatile memory and executing the code from volatile memory may be referred to as code shadowing.

When the embedded system is powered up, the embedded system typically performs a boot sequence to properly load the operating code from the nonvolatile memory to the volatile memory and initialize the host with the operating code. In order to perform the boot sequence, the host typically accesses boot code which is stored in a predefined area of non-volatile memory. The boot code is simple code which may be executed by the host, enabling the host to perform more complicated actions required to load the operating code into volatile memory and begin execution of the operating code.

In some cases, the host may transfer the operating code from the nonvolatile memory to the volatile memory using direct memory access (DMA). DMA allows a portion of memory to be quickly and automatically moved from one storage location to another storage location. To perform the DMA transfer, the host may need to initialize the DMA engine. In some cases, the DMA engine may be located in the host. To initialize the DMA engine, the host may use information and/or instructions provided by the boot code. Once the DMA engine is initialized, the host may issue commands to the DMA engine to load operating code from the non-volatile memory into the volatile memory. The host may then begin executing the operating code and any other code necessary for proper operation of the host.

Booting an embedded system as described above may require a variety of special configurations for the host. For example, the host typically requires multiple interfaces configured to interface multiple types of memory (Flash, ROM, and DRAM types of memory). The host is also typically configured to automatically load the boot code, load controller code for an embedded microcontroller, and provide capabilities for initializing and managing DMA transfers from the non-volatile memory to the volatile memory as a part of the boot sequence. Such special configurations required by the host for booting the embedded system typically reduce flexibility and increase design costs of the host and the embedded system.

Accordingly, what is needed is an improved system and method for booting an embedded system.

SUMMARY OF THE INVENTION

Embodiments of the invention provide a method and apparatus for initializing a computer system, wherein the computer system includes a processor, a volatile memory, and a non-volatile memory. In one embodiment, the method includes, when the computer system is initialized, automatically copying initialization code stored in the non-volatile memory to the volatile memory, wherein circuitry in the volatile memory automatically creates the copy, and executing, by the processor, the copy of the initialization code from the volatile memory.

BRIEF DESCRIPTION OF THE DRAWINGS

So that the manner in which the above recited features of the present invention can be understood in detail, a more particular description of the invention, briefly summarized above, may be had by reference to embodiments, some of which are illustrated in the appended drawings. It is to be noted, however, that the appended drawings illustrate only typical embodiments of this invention and are therefore not to be considered limiting of its scope, for the invention may admit to other equally effective embodiments.

FIG. **1** is a block diagram depicting an exemplary system according to one embodiment of the invention.

FIG. **2** is a block diagram depicting a detailed view and data path of an exemplary DRAM device and NAND flash memory.

FIGS. **3**A and **3**B are flow diagrams depicting an exemplary boot sequence for an embedded system according to one embodiment of the invention.

FIG. **4** is a state diagram depicting an exemplary state machine for booting an embedded system according to one embodiment of the invention.

FIG. **5** is a block diagram depicting a detailed view of an exemplary DMA engine/parameter setting according to one embodiment of the invention.

FIG. **6** is a block diagram depicting circuitry for initializing the DMA engine using a sense-on-reset scheme according to one embodiment of the invention.

FIG. **7** depicts a combined RAM memory for storing boot codes and OS codes according to one embodiment of the invention.

DETAILED DESCRIPTION OF THE PREFERRED EMBODIMENT

Embodiments of the invention provide an improved system and method for booting an embedded system. In one embodiment of the invention, boot codes and controller codes stored

in a non-volatile memory may be loaded by a DMA engine located on a volatile memory chip into a boot code buffer and a controller code buffer. By utilizing the DMA engine located on the volatile memory chip to load boot and controller codes, the processing workload necessary to boot the embedded system may be offloaded from a host processor to the volatile memory chip, thereby reducing the complexity (and therefore the overall cost) of the host processor and the embedded system.

After the boot codes have been loaded from the non-volatile memory to the boot code buffer in the volatile memory, the host processor may then access the boot code stored in the boot code buffer. When the host accesses the boot code stored in the boot code buffer, the host may perform boot operations. In one embodiment, the boot operations may include issuing commands to the DMA engine to load operating system code in the volatile memory. The host may then execute the operating system code stored in the volatile memory. In one embodiment, the boot codes and controller codes may be loaded by the DMA engine into the volatile memory chip without interaction with the host.

Embodiments of the invention are described below with respect to an embedded system including a host processor, volatile memory, and non-volatile memory. However, in some cases, the embedded system may contain multiple host processors, multiple volatile memories, and multiple non-volatile memories. The volatile memories may include any type of DRAM, SRAM, or any other type of volatile memory. The non-volatile memories may include any type of NAND flash memory, NOR flash memory, programmable read-only memory (PROM), electrically-erasable programmable read-only memory (EE-PROM), read-only memory (ROM), or any other type of non-volatile memory. The host processor may include any type of processor, including a central processing unit (CPU), a digital signal processor (DSP), a microcontroller unit (MCU) or a direct memory access (DMA) data transmission device. Also, each chip in the system may in some cases contain multiple types of processors and/or memories. For example, the host may include a CPU, DSP, and SRAM. The non-volatile memory may, in some cases, include a ROM and a flash memory. Other exemplary combinations which may be used with embodiments of the invention should be readily apparent to one of ordinary skill in the art

An Exemplary Embedded System

FIG. **1** is a block diagram depicting an exemplary system **100** according to one embodiment of the invention. As depicted, the system **100** may include a host **102**, volatile memory (DRAM device **110**), and non-volatile memory (NAND flash memory **130**). The host may access the DRAM device **110** via DRAM connection **104**. The DRAM device **110** may access the NAND flash memory **130** via a flash interface **122** and flash memory connection **124**. In some cases, because the flash interface is located on the DRAM device **110**, the host **102** may not require a flash memory interface or connection, thereby simplifying design and selection of the host **102**. Optionally, where desired, the host **102** may include a flash memory interface and connection.

In one embodiment of the invention, the DRAM device **110** may include an SDRAM memory array **108**. The DRAM device may also contain a boot code and data buffer **106**, a DRAM interface **114**, a flash manager **112**, a controller code buffer **116**, a embedded microcontroller core **118**, and DMA engine **120**. As described below, the NAND flash interface **122** may be used to access information stored in the NAND flash memory **130** including boot codes **132**, controller codes **134**, operating system and application code **136**, data **138**, and any other information stored in the NAND flash memory **130**.

FIG. **2** is a block diagram depicting a detailed view and data path of the DRAM device **110** and NAND flash memory **130** in accordance with one embodiment of the invention. In some cases, the NAND flash memory **130** may be divided into blocks (blk_0 to blk_m) and partitioned (e.g., divided into non-overlapping memory areas). Each of the types of code **132**, **134**, **136**, depicted in FIG. **1** may be stored as images (e.g., copies made from a single source) in the partitions. As depicted in FIG. **2**, the NAND flash memory **130** may contain controller code images **234**, boot images **232**, operating system, application and/or DSP code images **236**. The NAND flash memory **130** may also contain other data **138**. Also, as previously described, the DRAM memory device **110** may contain a data and boot code buffer **106**. In some cases, the data buffer **210** and boot code buffer **212** may be provided as separate buffers, as depicted.

As described below with respect to the boot sequence, the DMA engine circuitry **120** may be used to automatically load boot codes **132** from the boot code images **232** into the boot code buffer **212** and load controller codes **134** from the controller code images **234**. After the boot codes **132** and controller codes **134** have been loaded into the DRAM memory device **110**, commands issued to the DMA engine **120** may be used to initiate a DMA access which copies desired code from the OS, application, and DSP code images **236** and other data **138** into a code shadow **204** and other data **202** stored in the SDRAM array **108**.

In some cases, by offloading work from the host **102** to the DMA engine **120** and embedded microcontroller **118** in the DRAM memory device **110**, design and operation of the host **102** and embedded system **100** may be simplified. Also, by storing the boot codes **132**, controller codes **134**, and OS/Application/DSP code **136** in programmable non-volatile memory **130**, code needed for operation of the embedded system **100** may be stored and retrieved in a more flexible manner. For example, in order to update the boot codes **132**, controller codes **134**, and/or OS/Application/DSP code **136**, the new codes may be merely rewritten over the old codes in the programmable non-volatile memory **130**. Because information about the storage and retrieval of the codes may also be stored in the programmable non-volatile memory, new storage and retrieval information may also be programmed into the programmable non-volatile memory **130** when any of the codes are updated.

Exemplary Boot Sequence

FIGS. **3**A and **3**B are flow diagrams depicting an exemplary boot sequence for an embedded system **100** according to one embodiment of the invention. The boot sequence may utilize information stored in the NAND flash memory **130**. The information may be stored in the NAND flash memory **130** before the system **100** is initially booted, for example, by a NAND programmer **302**. The NAND programmer **302** may burn boot codes **132** (step **304**), controller codes **134** (step **306**), and OS codes **136** (step **308**) into the NAND flash memory **130**. Design considerations known to those skilled in the art may be made in selecting the relative memory size and placement of each of the codes **132**, **134**, and **136**.

When the system **100** is powered up at step **310**, the boot sequence may begin at step **312** by loading the boot codes **132**. In one embodiment, the boot codes **132** may be loaded from the NAND flash memory **130** into the boot code buffer **212** using the DMA engine circuitry **120** of the DRAM memory device **110**. As known to those skilled in the art, the DMA access may include automatic transfer of the boot code

132 from the NAND flash memory 130 to the boot code buffer 212 without external control or input, e.g., by the host 102 or other external controller circuitry. The DMA access may continue until the DMA load completes (step 314).

The DMA engine circuitry 120 may utilize the NAND flash interface 122 of the DRAM memory device 110 to access the NAND flash memory 130. In one embodiment, the DMA engine circuitry 120 or other suitable circuitry in the DRAM device may be automatically configured to load the boot codes 134 from a predefined area of the NAND flash memory 130 (e.g., beginning at block 0, memory address 0, and continuing for a designated length). Optionally, the source address and size of the boot code may be provided by an external device, by data stored in an area of memory (e.g., in a ROM or in a predefined area of the NAND flash memory 130) or in another manner, as described below.

After the boot codes 132 have been loaded at steps 312 and 314, the controller codes 116 used by the embedded microcontroller core 118 may be loaded beginning at step 316. In some cases, loading of the controller codes 134 may be initiated automatically after the boot codes 132 have finished loading. In one embodiment, the controller codes 134 may be loaded from the NAND flash memory 130 to the controller code buffer 116 where the controller codes 134 may be accessed by the embedded microcontroller core 118. In some cases, the DMA engine 120 may be configured to automatically load the controller codes 134, e.g., after loading the boot codes 132. The controller codes 134 may be loaded from a predefined area of the NAND flash memory 130, using instructions in the boot codes 132, using instructions issued from an external device, or using any other manner known to those skilled in the art. Further embodiments for loading the boot and controller codes 132, 134 are also described in greater detail below. The DMA access used to load the controller codes 134 may continue until the load completes at step 318.

After the boot codes 132 and controller codes 134 have been loaded into the boot code buffer 212 and the controller code buffer 116, respectively, the embedded microcontroller 118 may be activated, and the NAND flash manager 112, error correction code (ECC), and code decompression utilities may be setup at step 320. The embedded microcontroller 118 may be used to provide NAND flash management functionality for the NAND flash memory 130 (e.g., thereby offloading such flash memory management from the host 102). The NAND flash manager 112 may also be used by the embedded microcontroller 118 to access to the NAND flash memory 130 (e.g., by providing support for reading from and writing to the NAND flash memory 130). The ECC utilities may be used to ensure that data received from the NAND flash memory 130 has been correctly transmitted and possibly correct errors in the transmission, if any. The code decompression utilities may be used to decompress code stored in a compressed format (e.g., the OS/Application code 136) which is retrieved from the NAND flash memory 130.

After the embedded microcontroller 118 has been activated and after the related support circuitry has been initialized, the host 102 may be booted from the boot buffer 212. In one embodiment of the invention, the boot buffer 212 may be accessed by the host 102 via the DRAM connection 104. The boot buffer 212 may be accessed by the host 102, for example, by requesting data from a specific, predefined memory address within DRAM memory device 110. Optionally, special commands issued to the memory device 110 may be used to access the boot buffer 212. The host 102 may use the boot code 132 stored in the boot buffer 212 to perform more complicated actions required to load the operating system code 136 into the DRAM memory device 110 and begin execution of the operating system code 136 and other hardware devices in the host system, etc. For example, the boot code 132 may disable interrupts, initialize mode registers in the host 102, and issue commands to the memory device 110 to begin code shadowing of the operating system code 136. The boot code 132 may also provide information which indicates which commands should be issued to the memory device 110 to perform code shadowing operations and the location of the operating system code 132 within the NAND flash memory 130.

After the host 102 has booted and initialized the hardware at step 322, the OS/App/DSP images 236 may be loaded at step 328. In one embodiment of the invention, the host 102 may issue commands to the DMA engine 120 to initiate the loading of the OS/App/DSP images 236 from the NAND flash memory 130 to the SDRAM array 108 via a DMA transfer. In some cases, the host 102 may use the boot code 132 to issue the appropriate commands to the DMA engine 120 and/or controller 118. Once the commands have been issued to the DMA engine 120, the DMA engine 120 may automatically and autonomously perform the DMA transfer without interaction from the host 102. Meanwhile, the host 102 may remain active with some other tasks (which may include waiting in a wait state) until the memory device 110 and/or DMA engine 120 indicate that the shadowing is complete (step 324).

While the OS/App/DSP images 236 are loaded, the code being loaded may be checked using embedded ECC and decompressed (if the code 236 is stored in a compressed format) at step 330. In one embodiment, the embedded microcontroller core 118 and/or other components (e.g., the DMA engine circuitry 120 and the NAND flash manager 112) may check the transferred code using ECC and perform the decompression. The DMA transfer may continue until the DMA load of the code shadow 204 is complete (step 332).

After the host 102 determines that the shadowing is complete (step 324), the host may start the operating system code 136 (and any other code utilized by the host 102) from the code shadow 204 located in the SDRAM array 108. In one embodiment, a signal or command issued by the DMA engine 120 after the DMA transfer of the OS/App/DSP codes 136 is complete may be used to indicate to the host 102 that the code shadowing has been completed. When the host 102 starts the operating code from the DRAM memory device 110, normal operations of the embedded system 100 may commence, successfully completing the boot sequence 300.

The boot sequence described above may help improve design of the embedded system for several reasons. For example, in some cases, the host 102 may not be used for booting preparation, such as loading the boot codes 132, thereby overcoming the need to enable prior initialization of the host 132 before loading the boot codes 132. Also, the host 102 may not be involved in initialization of the NAND flash memory 130, again reducing the need for prior initialization of the host 102. Further, because the DRAM memory device 110 may contain the DMA engine 120 and embedded microcontroller core 118, the host 102 need not provide extensive support for the DMA transfers and code shadowing. Instead, the host 102 may merely issue commands to the DRAM memory device 110 and allow the DRAM memory device 110 to perform the necessary DMA transfers.

FIG. 4 is a state diagram depicting an exemplary state machine 400 for booting an embedded system 100 according to one embodiment of the invention. When the system 100 is initially powered up, each of the system components may enter a reset state 402. In the next state (the DMA parameter

state **404**), the DMA engine circuitry **120** may be initialized with DMA parameters (e.g., a source address, destination address, and size of code to be moved) for loading the boot codes **132**. In one embodiment of the invention, the DMA parameters for the boot codes **132** may be placed in a register (Reg**0**) in the DMA engine **120** using a sense-on-reset configuration (SOR). The DMA engine registers and SOR configuration are described in greater detail below.

After the DMA parameters for the boot code **132** have been stored, the DMA load may be performed in DMA load state **406**. In one embodiment, the DMA engine **120** may utilize an automatic counter to transfer the boot codes **132** from the source address to the destination address until the boot code **132** designated by the size parameter has been moved. Each time a read request is sent to the NAND flash memory **130**, a signal from the NAND flash memory (R/B#, which is asserted when the NAND memory is Ready and lowered when the NAND memory is Busy) may remain low, indicating that a page is being loaded from the NAND flash memory **130** (e.g., that the NAND flash memory **130** is in a busy state). When the R/B# signal is asserted, indicating that the page has been loaded, the DMA engine **120** may either continue the DMA transfer by loading another page from the NAND flash memory **130** (depending on the counter value and size parameter), or complete the load and transition to the next state.

After the boot codes **132** have completed loading via the DMA engine **120**, an automatic trigger may cause the state to transition back to DMA parameter state **404** where the DMA parameters for transferring the controller codes **134** are initialized. In one embodiment, the DMA parameters may be initialized by loading a source address, destination address, and size for the controller codes **134** into a register (Reg**1**) of the DMA engine **120**. After the DMA parameters for the controller codes **134** have been stored, the state may transition to DMA load state **406** where the DMA load of the controller codes **134** is performed by transferring the codes **134** from the source address to the destination address while a counter tracks the size of the code transferred, as described above.

After the controller codes **134** have been loaded and the initial DMA transfers are complete, the state may transition to DMA idle state **408** where the DMA engine **120** remains in the idle state **408**. At the same time, the embedded microcontroller **118** may start at controller start state **410** and initialize support for accessing the NAND flash memory **130**, such as the NAND flash manager **112**, ECC, and code decompression functionality. As described above, the embedded microcontroller core **118** may utilize controller codes **134** stored in the controller code buffer **116** to perform the initialization. After the embedded microcontroller starts and the NAND flash memory **130** is functional, the state may transition to host boot-up state **412** where the host **102** is booted up, for example, using the boot codes **132** stored in the boot code buffer **212**.

When the host **102** boots up and completes any hardware initialization, the host may issue commands to the DMA engine **120** (e.g., using commands provided by the boot code **132**) to cause the DMA engine **120** to transition from the DMA idle state **408** to DMA parameter state **404** where the host **102** initializes the DMA parameters of the DMA engine **120** to perform the code shadowing of the OS/App/DSP images **236** from the NAND flash memory **130** into the SDRAM array **108**. The host **102** may initialize the DMA engine **120**, for example, by providing DMA parameters for the source address, destination address, and size of the OS/App/DSP images **236**. The parameters for the OS/App/DSP images **236** may be stored, for example, in a DMA engine register (Reg**2**). After the DMA parameters for the OS/App/DSP images **236** have been stored, the state may transition to DMA load state **406** where the DMA load of the OS/App/DSP images **236** is performed by transferring the OS/App/DSP codes **136** from the source address to the destination address while a counter tracks the size of the code transferred, as described above.

After the OS/App/DSP codes **136** have been loaded into the SDRAM **108** via the DMA transfer, the DMA engine **120** may return to a DMA idle state **408** while the host **102** starts the operating system using the code shadow **204** (host starting OS state **414**). After the host **102** begins normal operations, the host **102** or other components in the embedded system **100** may initialize further DMA data transfers beginning at data transfer state **416**.

Control of the DMA Engine

FIG. **5** is a block diagram depicting a detailed view of an exemplary DMA engine **120** and parameter settings according to one embodiment of the invention. As depicted, the DMA engine **120** may contain multiple registers $\mathbf{502}_0$, $\mathbf{502}_1$, $\mathbf{502}_2$, $\mathbf{502}_3$, an address generator and counters **504**, NAND access control **506**, and a DMA finite state machine (FSM) **508**. The DMA engine **120** may also contain a Boot/OS/Data download control **510**, controller code download control **512**, and data upload control **514**. Each of the components are described in greater detail below.

In one embodiment of the invention, the DMA engine registers $\mathbf{502}_0$, $\mathbf{502}_1$, $\mathbf{502}_2$, $\mathbf{502}_3$ may be used to control which data is loaded from the NAND flash memory **130** into the SDRAM **108** and vice versa. As depicted, values may be stored in the registers indicating a source address (SA), destination address (DA), and size of data to be transferred.

To perform a DMA transfer, the registers $\mathbf{502}_0$, $\mathbf{502}_1$, $\mathbf{502}_2$, $\mathbf{502}_3$ may be input into the address generator and counters **504** which may be controlled by the DMA FSM **508**. The address generator and counters **504** may use each source address, destination address, and size entry to generate the source address and destination address. The address generator and counters **504** may also keep counters which monitor the progress of a DMA transfer. For example, when a DMA transfer is initiated, the address generator and counters **504** may initialize a counter and provide source and destination addresses to the NAND flash memory **130** (via the NAND flash interface **122**) and to the SDRAM array **108** (via the SDRAM interface **114**, or other interfaces, e.g., for the boot code buffer **212**).

After the address generator and counter have provided the source and destination addresses, the DMA FSM **508** may issue commands to the NAND access control **506** requesting data to be read from the source address and written to the destination address. Depending on the data being transferred, the DMA engine **120** may utilize the Boot/OS/Data download control **510**, controller code download control **512**, or data upload control **514** to perform the transfer. After the transfer has been performed, the address generator and counters **504** may increment or decrement a counter and calculate the next source and destination address for the DMA transfer. The DMA transfer may continue until an amount of data equal to the size parameter (tracked, e.g., using the counters in the address generator and counters **504**) has been transferred.

Initialization of the DMA Engine

As described above, in one embodiment of the invention, when the embedded system is powered on and the DMA engine **120** is initialized, the DMA engine **120** may automatically transfer boot codes **132** and controller codes **134** from the NAND flash memory **130** to buffers **106**, **116** in the DRAM device **110** for use in initializing and operating the host **102** and embedded microcontroller **118**. Commands

may then be issued to the DRAM device **110** (e.g., by the host **102**) causing the OS/App/DSP codes **136** to be loaded via a DMA transfer from the NAND flash memory **130** to the SDRAM array **108** where the codes **136** may then be accessed by the host **102**. In some cases,

In one embodiment, the PowerUp_Trigger signal and Host_Trigger signal issued to the DMA engine **120** (e.g., to the DMA FSM **508**) may be used to place the DMA FSM in the proper state for loading the boot, controller, and/or OS/App/DSP codes **132**, **134**, **136**. For example, when the PowerUp_Trigger signal is received, the DMA engine **120** may automatically load the boot and controller codes **132**, **134**. Later, when the Host_Trigger signal is received, the DMA engine **120** may automatically load the OS/App/DSP codes **136**.

In one embodiment of the invention, to perform the initial transfer of the boot codes **132** from the NAND flash memory **130** to the boot code buffer **212**, the first register $\mathbf{502}_0$ of the DMA engine **120** may be initialized with a source address SA and destination address DA and a size of the boot codes **132** being transferred. In some cases, the initialization information may be preset (e.g., stored in a ROM or hard-wired) in the DMA engine **120**. Optionally, the initialization information may be stored in a predefined area of the NAND flash memory **130**. The initialization information may also be received from any convenient external source. In some cases, a combination sources (predefined, ROM, NAND flash memory **130**, and/or external sources) may be utilized to obtain the initialization information for the DMA engine **120**. Initialization information for the controller codes and OS/App/DSP codes **136** may also be received from such sources or a combination of such sources.

FIG. **6** is a block diagram depicting circuitry **600** for initializing the DMA engine **120** using a sense-on-reset scheme according to one embodiment of the invention. In the depicted case, signals applied to configuration pins **614** may be used to select a source address SA and size for the boot codes **132** to be loaded. As described above, the boot codes **132** may be loaded into a boot code buffer at a predefined location, such that a destination address DA for the boot codes **132** may not be utilized or provided via the configuration pins **614**. In some cases, because the configuration pins **614** may be shared for regular operations during a non-RESET mode (for example, the configuration pins **614** may be used as address pins or control pins during a non-RESET mode) on some types of devices such as the DRAM device **110**, additional pins may not be needed or added to the DRAM device **100** to provide the source address and size for initialization of the DMA engine **120**.

In one embodiment of the invention, the data placed on the configuration pins **614** may be latched using latches **604**, e.g., during a sense-on-reset (SOR) operation. During the SOR operation, a reset signal may be generated internally or received by the DRAM device **110** via the reset pin **602** (RESET#) indicating that the system **100** has been reset or powered-up. For example, when the system **100** is powered up, the PowerUp_Trigger signal may be generated by the DRAM device **110**. When the reset signal is detected, the latches **604** may latch the data provided via the configuration pins **614**. In one embodiment of the invention, the initialization data on the configuration pins **614** may be provided by an external device such as the host **102** or any other convenient device. Optionally, the initialization data on the configuration pins **614** may be provided via a hard-wired connection to desired voltage levels (e.g., via pull-up or pull-down resistors) if desired.

After the reset signal has been received and the initialization data provided on the configuration pins **614** has been latched by latches **604**, the initialization data may be placed in the appropriate registers. In one embodiment of the invention, the initialization data may be used to look-up a source address and size for the boot codes **132** in a source address table **608** and a size table **606**. As depicted, if four reset pins are used for the source address, the look-up table **608** may provide **16** different entries for the source address. For example, the source address may be provided as a block number within the NAND flash memory **130**. Optionally, more pins may be provided and direct addressing may be utilized for the source address. With respect to the size value, if four reset pins are used for the size value, the size table **606** may contain 16 possible entries from which a size of the boot code **132** may be selected. For example, the size value may be provided as a number of kilobytes (KB). As depicted, each of the tables **606**, **608** may have default values which may be applied either by applying appropriate voltages to the configuration pins **614** or by leaving the configuration pins **614** disconnected.

After the source address and size have been determined, the source address and size may be stored, for example, in the first register $\mathbf{502}_0$ of the DMA engine **120**. Once the boot codes **132** have been loaded from boot code image **232** in the NAND flash memory **130** to the SDRAM array **108** via a DMA transfer, the DMA engine **120** may proceed to load the controller codes **134**.

In one embodiment of the invention, the controller codes **134** may be loaded using data stored in the boot codes **132**, either by using instructions in the boot codes **132** to issue commands to the DRAM device **110** to cause the controller codes **134** to be loaded or by loading the data in the boot codes **132** directly into a register in the DMA engine **120**. Also as described above, other sources may be utilized for obtaining information used to load the controller codes **134**.

As depicted in FIG. **6**, in one embodiment, the controller code DMA register settings may be obtained using data from the boot code DMA register settings and from data in the boot codes **132** themselves. For example, in some cases, the controller code image **234** may be stored contiguously (e.g., in the next available memory space) in the NAND flash memory **130** with the boot code image **232**. Thus, to determine the source address for the controller code image **234**, the source address of the boot code image **232** may be added to the size **610** of the boot code image **232**. The resulting address may point to the beginning of the controller code image **134**. With respect to the destination address for the controller codes **134**, as previously described, the address may be predetermined because the controller codes may be stored in the control code buffer **116**.

In one embodiment, the size of the controller codes **134** to be transferred may be obtained from data stored in or at the end of the boot code image **232**. For example, the size of the predefined controller code size information may be loaded **612** from the end of the boot code image **232** into the register $\mathbf{502}_1$ for the controller codes settings. Once the register has been initialized, the DMA engine **120** may perform a DMA transfer of the controller codes **134** from the NAND flash memory **130** to the controller code buffer **116**.

In one embodiment, DMA engine registers $\mathbf{502}_2$, $\mathbf{502}_3$ may be utilized for subsequent transfers, for example, of the OS/App/DSP codes **136** or for any other transfers. Optionally, instead of utilizing multiple registers, the registers for the boot code **132** and controller code **134** transfers may be reused. Optionally, in some cases, a single register may be used for initializing each DMA transfer.

To initialize the DMA engine registers 502_2, 502_3 for transferring the OS/App/DSP codes **136**, any of the methods described above may be utilized. In one embodiment, the host **102** may access the boot code buffer **212** and utilize instructions in the boot code **132** to initialize the DMA engine registers 502_2, 502_3. The DMA engine **120** may then automatically perform the code shadowing of the OS/App/DSP codes **136** without interaction with the host **102**. After the code shadow **204** has been created, the host **102** may execute the OS/App/DSP codes **136** from the SDRAM array **108** and begin regularly operating the embedded system **100**.

While described above with respect to a DRAM memory device **110** have an SDRAM array **108**, a data buffer **210**, a boot code buffer **212**, and a controller code buffer **116**, any convenient configuration of buffers and memory arrays may be utilized for the operations described above. For example, in one embodiment, each DMA transfer may occur between the NAND flash memory **130** and the SDRAM array **108** without storing code in separate, special purpose buffers. Optionally, in some cases, code may be initially loaded into the SDRAM array **108** and then transferred to buffers before being accessed by other devices and/or circuitry.

As another example, FIG. **7** depicts a combined RAM memory **702** (which may also be referred to as a shared buffer **702**) for storing boot codes **132** and OS codes **136** according to one embodiment of the invention. As depicted, the boot codes **132**, OS/App/DSP codes **136**, and other data **138** may be transferred as described above from the NAND flash memory **130** into the shared buffer **702**. Optionally, the other data may be transferred directly to the SDRAM array **108**. The controller codes **134** may be stored, for example, in the controller code buffer **116**.

In one embodiment, to avoid overwriting other data in the combined memory **702**, the boot codes **132** may be stored in a boot code area **704** in the combined memory **702** and the OS codes, other codes, and data may be stored in an OS code/data area **706** in the combined memory **702**. To efficiently store data in the combined memory **702**, the boot code area **704** may be stored at the beginning of the combined memory **702** while the OS code/data area **706** may be stored at the end of the combined memory **702**. As data and code are transferred into the combined memory **702**, the memory **702** may be filled from the low memory address upwards and from the high memory addresses downwards. In one embodiment, control circuitry may be used to ensure that no collision of the boot code area **704** and the OS code/data **706** area occurs. Optionally, in some cases, the boot code **132** stored in the shared memory **702** may be used to initialize the host **102** and then overwritten after the host **102** has booted.

As described above, embodiments of the invention provide a DRAM device **110** with a DMA engine **120** which may be utilized to automatically transfer boot codes **132** and controller codes **134** from a NAND flash memory **130** to the DRAM memory device **110**. The DMA engine **120** may also receive commands directly or indirectly from external devices allowing OS/App/DSP codes **136** to be shadowed in the DRAM device **110**. In some cases, the DMA engine **120** may perform initial boots without the embedded microcontroller **118** or host **102** input and may be adaptable to re-locatable boot/controller code storage locations. Also, in some cases, it may be possible to use a shared buffer **702** for storing boot codes **132** and OS or other codes **136**.

While the foregoing is directed to embodiments of the present invention, other and further embodiments of the invention may be devised without departing from the basic scope thereof, and the scope thereof is determined by the claims that follow.

What is claimed is:

1. A method for initializing a computer system, wherein the computer system includes a processor, a volatile memory, and a non-volatile memory, the method comprising:

when the computer system is initialized, automatically copying initialization code stored in the non-volatile memory to the volatile memory via a non-volatile memory interface of the volatile memory, wherein circuitry in the volatile memory automatically creates the copy of the initialization code; and

executing, by the processor, the copy of the initialization code from the volatile memory, wherein the initialization code is obtained from the volatile memory via a volatile memory interface of the volatile memory.

2. The method of claim **1**, wherein automatically copying the initialization code comprises:

performing a direct memory access to transfer the initialization code from the non-volatile memory to the volatile memory, wherein the circuitry in the volatile memory performs the direct memory access.

3. The method of claim **2**, wherein performing a direct memory access to transfer the initialization code from the non-volatile memory to the volatile memory comprises:

automatically transferring boot code into a boot code buffer; and

automatically transferring controller code into a controller code buffer.

4. The method of claim **3**, wherein the boot code and the controller code are placed in a shared buffer comprising the boot code buffer and the controller code buffer.

5. The method of claim **3**, wherein the processor executes the boot code from the boot code buffer and wherein a controller on the volatile memory device executes the controller code from the controller code buffer.

6. A method for initializing a computer system, wherein the computer system includes a processor, a dynamic, random access memory (DRAM) memory, and a flash memory, the method comprising:

when the computer system is initialized, automatically creating a copy of boot code stored in the flash memory in a boot code buffer of the DRAM memory, wherein direct memory access circuitry in the DRAM memory automatically creates the copy, wherein the boot code is loaded into the DRAM memory from the flash memory via a nonvolatile memory interface of the DRAM memory; and

executing the copy of the boot code from the boot code buffer in the DRAM memory, wherein the copy of the boot code is loaded by the processor via a volatile memory interface of the DRAM memory.

7. The method of claim **6**, wherein the processor executes the copy of the boot code from the boot code buffer, and further comprising:

in response to executing the copy of the boot code, issuing commands from the processor to the DRAM memory, wherein the commands cause the direct memory access circuitry to automatically create a copy of operating system code stored in the flash memory in a memory array of the DRAM memory; and

executing the copy of the operating system code from the memory array of the DRAM memory.

8. The method of claim **6**, wherein the copy of the boot code stored in flash memory is created via a direct memory access transfer.

9. The method of claim **8**, wherein the direct memory access transfer is initiated without commands issued between the processor and DRAM memory.

10. The method of claim **6**, further comprising:

after creating the copy of the boot code, automatically creating a copy of controller code stored in the flash memory in a controller code buffer of the DRAM memory, wherein the direct memory access circuitry in the DRAM memory automatically creates the copy; and

executing the copy of the controller code stored in the controller code buffer with a controller in the DRAM memory.

11. A method for initializing a computer system, wherein the computer system includes a processor, a volatile memory, and a non-volatile memory, the method comprising:

when the computer system is initialized, automatically copying initialization code stored in the non-volatile memory to the volatile memory via a nonvolatile memory interface of the volatile memory, wherein circuitry in the volatile memory automatically creates the copy without receiving any command input from the processor; and

executing, by the processor, the copy of the initialization code from the volatile memory, wherein the initialization code is obtained from the volatile memory via a volatile memory interface of the volatile memory.

* * * * *