UNITED STATES PATENT AND TRADEMARK OFFICE

BEFORE THE PATENT TRIAL AND APPEAL BOARD

DELL INC. and DELL TECHNOLOGIES INC.,
Petitioner,

v.

NEO WIRELESS LLC,
Patent Owner.

IPR2021-01480
Patent 8,467,366 B2

Before CHARLES J. BOUDREAU, MICHELLE N. ANKENBRAND, and MATTHEW S. MEYERS, *Administrative Patent Judges.*

ANKENBRAND, *Administrative Patent Judge*.

DECISION
Denying Institution of *Inter Partes* Review
35 U.S.C. § 314

HONDA 1020

I. INTRODUCTION

Dell Inc. and Dell Technologies Inc. (collectively, "Petitioner") filed a Petition requesting an *inter partes* review of claims 1–24 of U.S. Patent No. 8,467,366 B2 (Ex. 1001, "the '366 patent"). Paper 3 ("Pet."). Neo Wireless LLC ("Patent Owner") filed a Preliminary Response. Paper 7 ("Prelim. Resp.").

We have authority to determine whether to institute an *inter partes* review. 35 U.S.C. § 314 (2018); 37 C.F.R. § 42.4(a) (2020). The standard for instituting an *inter partes* review is set forth in 35 U.S.C. § 314(a), which provides that an *inter partes* review may not be instituted "unless the Director determines . . . there is a reasonable likelihood that the petitioner would prevail with respect to at least [one] of the claims challenged in the petition."

For the reasons set forth below, upon considering the Petition, Preliminary Response, and evidence of record, we determine the information presented in the Petition does not establish a reasonable likelihood that Petitioner would prevail with respect to at least one of the challenged claims. Accordingly, we deny the Petition, and do not institute an *inter partes* review.

II. BACKGROUND

A. Related Matters

The parties identify *Neo Wireless LLC v. Dell Technologies Inc.*, 6-21-cv-00024 (W.D. Tex.) as a district court proceeding involving the '366 patent. Pet. 80; Paper 5, 1. Patent Owner also identifies two former district court proceedings and two proceedings before the Board: IPR2021-01468 and IPR2021-01486. Paper 5, 1.

B. The '366 Patent

The '366 patent, titled "Methods and Apparatus for Random Access in Multi-Carrier Communication Systems," issued on June 18, 2013. Ex. 1001, at [45], [54]. The '366 patent describes a random access process that includes ranging:

> In a wireless communication system, a mobile station first needs to perform a random access for establishing communication with a base station. The random access typically includes two steps: (1) Ranging and (2) Resource Request and Allocation. During Ranging, the mobile station sends a signal to the base station, so that the base station can identify the mobile station and measure the power and time delay of the mobile station, and inform the mobile station for power adjustment and time advance. During Resource Request and Allocation, the uplink and downlink resources for communication are requested and allocated. Ranging is a critical part of multi-carrier wireless communication system, and there are several important issues related to ranging:
>
> 1. The bandwidth efficiency of the ranging signals
> 2. The interference of ranging signal with other uplink signals
> 3. The detection performance and complexity at the base station receiver
>
> The ranging process typically involves an exchange of messages between the base station and the mobile station by which the mobile station aligns itself with the start of each time slot after compensating for propagation delay and other factors.

Id. at 1:24–47. The '366 patent further explains that the ranging of many mobile stations may cause a problem because the mobile stations contend for access to the shared channel and it is difficult to complete ranging for any of the mobile stations. *Id.* at 1:47–53. This leads to excessive time to complete the ranging process and the waste of much bandwidth on the shared channel. *Id.* at 1:53–55.

The ’366 patent describes methods and apparatus that use ranging signals that are designed to improve receiving reliability, reduce interference with other uplink signals, and improve the detection performance at a base station receiver. *Id.* at 2:40–44. The ’366 patent explains that a multi-carrier signal is made up of subcarriers in the frequency domain and data subcarriers can be arranged into groups called subchannels. *Id.* at 2:61–64, 3:5–6.

We reproduce Figure 4 of the ’366 patent below.

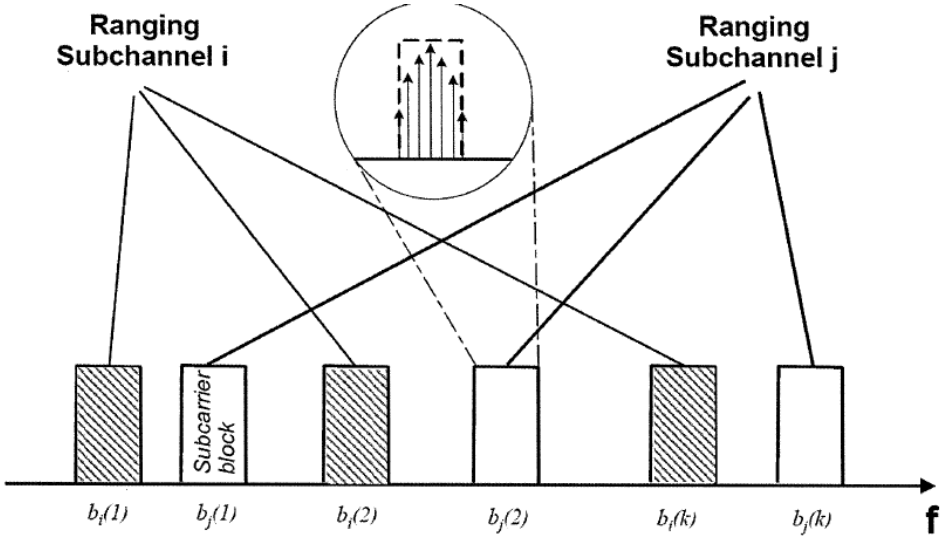

FIG. 4

Figure 4 shows two ranging subchannels composed of subcarrier blocks. *Id.* at 1:66–67, 3:27–28. The ’366 patent states:

> FIG. 4 schematically shows that the signal power of the subcarriers towards the boundary (the lower ends and the higher ends in frequency) of a block is lower than that of the subcarriers towards the center of the block. (In a special case, the power levels of the two subcarriers at both ends of a block are set to zero.) Because different factors may cause possible overlap of two subcarrier blocks from to different transmitters, the attenuated boundary subcarriers will minimize the resulting interference.

Id. at 3:29–38.

The ’366 patent further describes an embodiment in which “the ranging sequence is designed such that its corresponding time-domain signal exhibits relatively low peak-to-average power ratio.” *Id.* at 4:34–37. According to the ’366 patent, “[t]his improves the power efficiency of the mobile station transmission power amplifier.” *Id.* at 4:37–38.

C. Illustrative Claim

Petitioner challenges claims 1–24 of the ’366 patent (collectively, “the challenged claims”). Claims 1, 9, 17, and 22 are the independent challenged claims. Claim 1 is illustrative of the claimed subject matter, and recites:

> 1. In a multi-cell orthogonal frequency division multiple access (OFDMA) wireless communication system comprising a plurality of base stations and mobile stations, a mobile station configured to communicate with a serving base station in a cell via a communication channel, the mobile station comprising:
>
> an apparatus configured to transmit a data signal to the serving base station in the cell over a data subchannel, wherein the data subchannel comprises a plurality of adjacent or non-adjacent subcarriers within the communication channel; and
>
> an apparatus configured to transmit a ranging signal to the serving base station in the cell over a ranging subchannel for random access, wherein:
>
> the ranging signal is formed from a ranging sequence selected from a set of ranging sequences associated with the cell for identifying the mobile station;
>
> the ranging signal lasts over a period of one or multiple orthogonal frequency division multiplexing (OFDM) symbols

and the ranging signal exhibits a low peak-to-average power ratio in the time domain; and

the ranging subchannel comprises at least one block of subcarriers within the communication channel and power levels of subcarriers at both ends of a block are set to zero.

Ex. 1001, 7:2–26.

D. Asserted Grounds of Unpatentability

Petitioner asserts that the challenged claims are unpatentable on the following grounds:

Claim(s) Challenged	35 U.S.C. §	References/Basis
1–4, 6–12, 14–20, 22–24	103(a)[1]	Ma,[2] TR[3]
5, 21	103(a)	Ma, TR, Soliman[4]
13	103(a)	Ma, TR, Li[5]
1–4, 6–12, 14–20, 22–24	103(a)	Ma, Jung[6]
5, 21	103(a)	Ma, Jung, Soliman
13	103(a)	Ma, Jung, Li

Pet. 1–2. Petitioner relies on the Declaration of Dr. Matthew Valenti (Ex. 1003) to support its asserted grounds of unpatentability. Patent Owner disputes that Petitioner's asserted grounds render any of the challenged

[1] The Leahy-Smith America Invents Act, Pub. L. No. 112-29, 125 Stat. 284 (2011) ("AIA"), amended 35 U.S.C. § 103. Because the '366 patent has an effective filing date before the effective date of the applicable AIA amendments, we refer to the pre-AIA version of 35 U.S.C. § 103.
[2] U.S. Pub. No. 2004/0001429 A1, published Jan. 1, 2004 (Ex. 1005).
[3] *Universal Mobile Telecommunications System (UMTS); UMTS Terrestrial Radio Access (UTRA); Concept evaluation (UMTS 30.06 version 3.0.0)*, TR 101 146 V3.0.0, European Telecommunications Standards Institute (December 1997) (Ex. 1006).
[4] U.S. Patent No. 6,101,179, issued Aug. 8, 2000 (Ex. 1007).
[5] U.S. Pub. No. 2002/0159422 A1, published Oct. 31, 2002 (Ex. 1009).
[6] U.S. Pub. No. 2004/0114504 A1, published June 17, 2004 (Ex. 1010).

claims unpatentable. *See generally* Prelim. Resp. Patent Owner relies on the Declaration of William P. Alberth, Jr. (Ex. 2001).

III. ANALYSIS

A. Level of Ordinary Skill in the Art

Petitioner asserts that a person of ordinary skill in the art "would have had at least a Bachelor's degree in an academic area emphasizing electrical engineering or a similar discipline, and at least two years of experience in the field working with, teaching, or researching wireless communication networks" and "[s]uperior education could compensate for a deficiency in work experience, and *vice-versa*." Pet. 4–5 (citing Ex. 1003 ¶¶ 23–24). Patent Owner does not provide its own description regarding the level of ordinary skill in the art, or otherwise dispute Petitioner's assertion. *See generally* Prelim. Resp.; *see also* Ex. 2001 ¶ 23 (Mr. Alberth "accept[ing] Dr. Valenti's proposed qualifications of a" person of ordinary skill in the art).

Petitioner's description is consistent with the level of ordinary skill reflected in the prior art references of record. *See Okajima v. Bourdeau*, 261 F.3d 1350, 1355 (Fed. Cir. 2001) (recognizing that the prior art itself may reflect an appropriate level of skill in the art). Accordingly, for purposes of this decision, we apply Petitioner's description of the person of ordinary skill in the art.

B. Claim Construction

It is not necessary for us to construe any claim terms to resolve the parties' disputes at institution. *See Nidec Motor Corp. v. Zhongshan Broad Ocean Motor Co.*, 868 F.3d 1013, 1017 (Fed. Cir. 2017) (per curiam) (claim terms need to be construed "only to the extent necessary to resolve the

controversy" (quoting *Vivid Techs., Inc. v. Am. Sci. & Eng'g, Inc.*, 200 F.3d 795, 803 (Fed. Cir. 1999))).

C. Petitioner's Challenges to the '366 Patent

All of Petitioner's challenges to the '366 patent are based on the combination of Ma and TR, or the combination of Ma and Jung, even though some of the challenges include additional references. *See* Pet. 1–2 (summary of asserted grounds). The parties dispute at this stage of the proceeding whether a person of ordinary skill in the art would have had reason to incorporate TR's guard carrier/guard band feature or Jung's null data into both ends of the block of subcarriers of Ma's Random Access Channel ("RACH"). Accordingly, we focus our discussion on this issue, which is dispositive. First, however, we provide a brief summary of Ma, TR, and Jung.

1. Ma (Ex. 1005)

Ma describes "a new uplink OFDM protocol" for a wireless terminal and a network terminal. Ex. 1005, at [57]. The protocol includes "a low rate mode OFDM transmission in a first frequency band of the OFDM band; and a second transmit chain for generating and transmitting a burst-mode transmission in a second frequency band of the OFDM band." *Id.* We reproduce Figure 2 of Ma below.

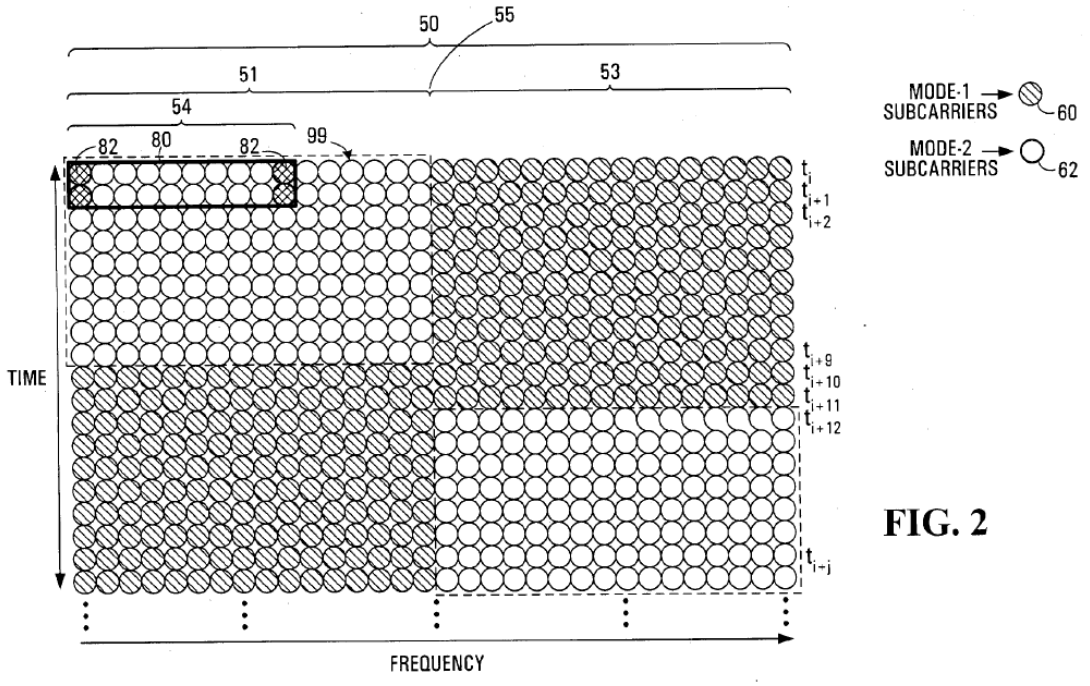

FIG. 2

Figure 2 illustrates an example time-frequency resource allocation within a common wireless channel according to an orthogonal frequency division multiple-access ("OFDMA") scheme. Ex. 1005 ¶ 94. Ma states that "OFDM is a method of digital modulation in which a set of data is mapped onto the set of OFDM sub-carriers." *Id.* ¶ 122. Ma explains that each circle in Figure 2 "represents the transmission of a single sub-carrier during a single OFDM symbol transmission period," with Figure 2's horizontal axis representing frequency and the vertical axis representing time. *Id.*

Ma describes the exemplary OFDMA scheme as including common wireless channel 50, which is implemented via an OFDM transmission scheme within an overall OFDM band that is divided into two frequency bands 51, 53. *Id.* ¶ 124. Ma explains that frequency bands 51, 53 can be used interchangeably to provide two different OFDMA modes, Mode-1 and Mode-2. *Id.* Sub-carriers 60 are used for Mode-1 and sub-carriers 62 are used for Mode-2 in Figure 2. *Id.* Ma describes first frequency band 51 has

the first sixteen sub-carriers of OFDM band 50 and second frequency band 53 has the second sixteen sub-carriers of OFDM band 50. Ex. 1005 ¶ 124. According to Ma, "Mode-1 is used to provide low rate circuit oriented connectivity for multiple users simultaneously preferably using orthogonal code separation, while Mode-2 is used to provide higher rate bursty packet connectivity." *Id.* Ma further describes Mode-1 as supporting "the provision of user dedicated channels with fixed data rate to support real-time service, uplink signaling and simple messaging," whereas "Mode-2 supports the transmission of high speed data bursts." *Id.* ¶ 143.

Ma also describes a RACH that User Equipment ("UE") new to a wireless network use to access a system. *Id.* ¶ 205. Ma describes an embodiment in which a RACH is overlaid atop common wireless channel 50 or over one of bands 51, 53. *Id.* ¶ 206. Ma explains that the RACH is therefore "transmitted simultaneously both in time and frequency with the transmission of the other Mode-1 signals by other users" and thus "[t]he RACH is thus a form of interference to the other users." *Id.* ¶ 206.

In addition, Ma describes a procedure for a UE to initiate a connection with a network. *Id.* ¶ 234. The procedure includes synchronizing the UE to a base station for timing and frequency and the UE listening to a downlink ("DL") signaling channel for information identifying RACH PN codes. *Id.* ¶¶ 235–236. The UE then "measures the DL long term C/I," sends a RACH code chosen randomly from the base station's code set, and "[t]he transmit power is determined inversely proportional to the DL long term C/I measurement." *Id.* ¶¶ 237–238. Ma explains that "[i]f the base station detects the RACH code successfully it measures the time offset of that UE and then sends the initial dedicated uplink access channel grant, together with the RACH code index as well as the time offset information." *Id.*

¶ 239. According to Ma, the "UE adjusts its timing and sends back its ID, its CQI report information, and uplink traffic load request if it wants to start uplink data transmission." *Id.* ¶ 240.

2. TR (Ex. 1006)

TR is a technical report that "describes the detailed evaluation work towards the definition of the Universal Mobile Telecommunications System UMTS Terrestrial Radio Access (UTRA) within SMG2." Ex. 1006, 5. TR describes time and frequency synchronization for an OFDMA system, which includes both downlink and uplink synchronization. *Id.* at 196–197, 204–206. TR explains that "[a]fter the mobile [station] has detected the basestations timing it sends an RACH to the basestation" and the basestation "measures the time offset for the received RACH and sends back the necessary timing advance to the MS (very similar to GSM)." *Id.* at 206.

We reproduce TR's Figure 6 below.

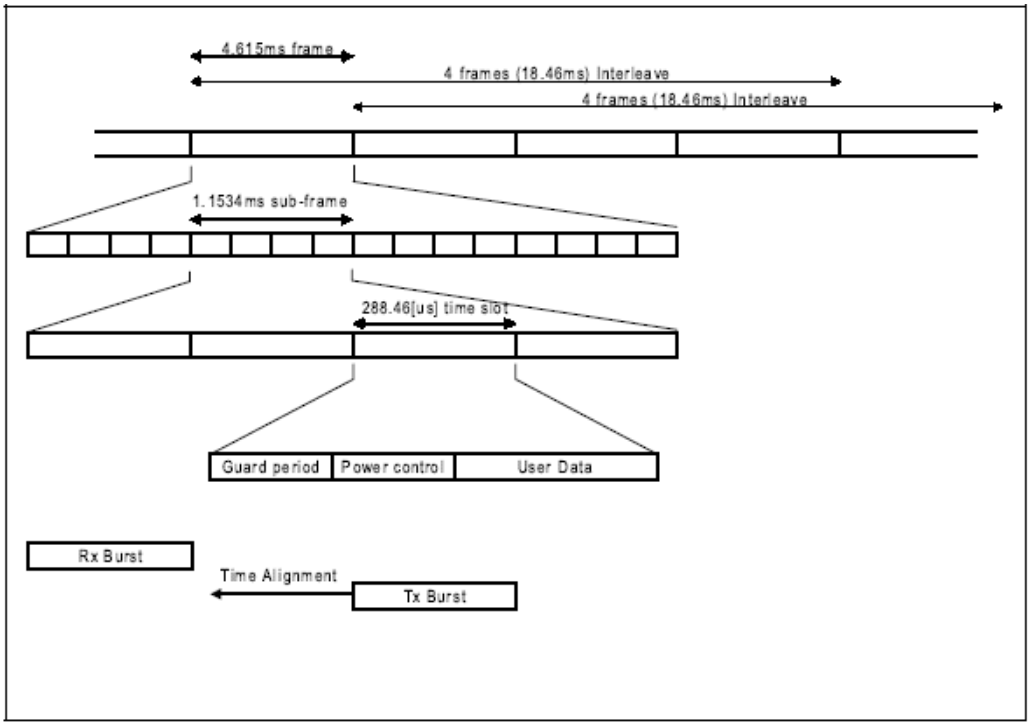

Figure 6: Frame (TDMA) Structure

Figure 6 depicts a TDMA frame structure. Ex. 1006, 198. TR describes the TDMA frame structure as including frames having a length of 4.615 ms that are divided into 4 sub-frames having a 1.1534 ms length. *Id.* A sub-frame in turn includes four time slots that are 288.46 µs in length. *Id.* TR describes a time slot as including a guard period, power control information, and data. *Id.*

TR's Figure 7, which we reproduce below, shows the shape of the modulation unit. *Id.* at 199.

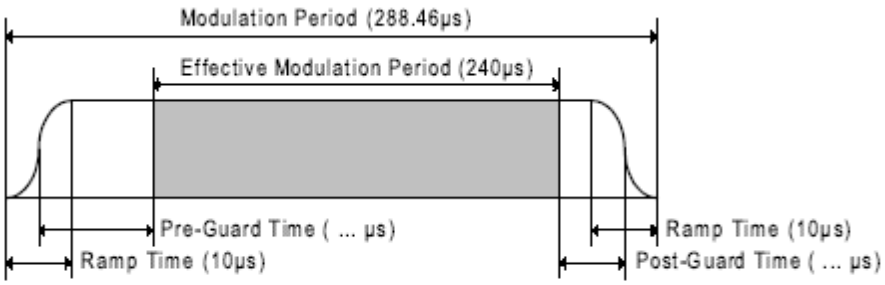

Figure 7: OFDM Modulation Burst

Figure 7 depicts an OFDM modulation burst. TR explains that "[t]he whole system frequency band is divided into small blocks (bandslots) with a fixed number of subcarriers." *Id.* TR shows several bandslots in Figure 8, which we reproduce below.

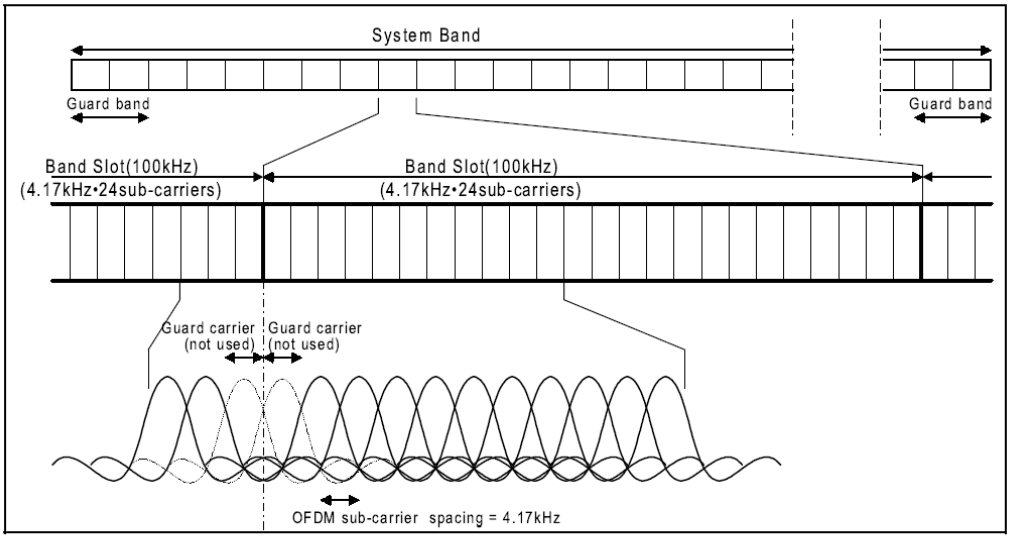

Figure 8: BDMA Frequency Structure

TR's Figure 8 shows individual bandslots having guard carriers at each end of the bandslot. Ex. 1006, 199. TR explains that "[i]n each bandslot the two subcarriers at the edge of the bandslot are left unmodulated to relax receiver blocking requirements." *Id.*

3. Jung (Ex. 1010)

Jung "relates generally to an orthogonal frequency division multiplexing (OFDM) communication system, and in particular, to an apparatus and method for generating a preamble sequence having a minimum peak-to-average power ratio (PAPR)." Ex. 1010 ¶ 3. Jung describes synchronization for the transmission and reception of transmission frames between a node and user equipment (UE). *Id.* ¶ 5. Jung explains that a node transmits a synchronization signal to enable the UE to detect the start of a frame that was transmitted by the node. *Id.* Jung states that "[g]enerally, a particular preamble sequence previously appointed by the Node B and the UE is used for the synchronization signal." *Id.* Jung further explains:

> In addition, a preamble sequence having a low peak-to-average power ratio (PAPR) is used for the preamble sequence used in an OFDM communication system, and a preamble created by concatenating a long preamble necessary for performing coarse synchronization to a short preamble necessary for performing fine frequency synchronization is used for the preamble transmitted from a Node B to a UE.

Id. ¶ 6.

Jung describes a long preamble sequence in which "a length-64 sequence is repeated 4 times and a length-128 sequence is repeated 2 times." *Id.* ¶ 13. Jung describes using the length-64 sequence that is repeated 4 times for time offset estimation and coarse frequency offset estimation, whereas the length-128 sequence that is repeated 2 times is used for fine frequency offset estimation. *Id.* ¶¶ 25–26. Jung further describes using the long preamble sequence for initial ranging and bandwidth request ranging. *Id.* ¶¶ 29–30.

Jung also describes an OFDM communication system that uses 256 subcarriers and that only 200 subcarriers of those are used. *Id.* ¶ 42. Specifically, Jung explains:

> Here, of the 256 subcarriers, only 200 subcarriers are used. That is, only 200 subcarriers excluding a 0th subcarrier, the -128th to -101st subcarriers, and the 101st to 127th subcarriers from the 256 subcarriers are used. Null data, or 0-data, is inserted in each of the 0th subcarrier, -128th to -101st subcarriers and 101st to 127th subcarriers, before being transmitted, and the reasons are as follows.

Id. As a first reason, Jung describes inserting null data into the 0th subcarrier so it represents a reference point of a preamble sequence in a time domain. *Id.* ¶ 43. Jung further states:

> In addition, the reason for inserting null data into 28 subcarriers of the -128th to $-10l^{st}$ subcarriers and 27 subcarriers of the 101st

> to 127th subcarriers is to provide a guard interval in a frequency domain because the 28 subcarriers of the -128th to -101st subcarriers and the 27 subcarriers of the 101st to 127th subcarriers correspond to a high frequency band in the frequency domain.

Id.

4. Analysis

Petitioner contends the subject matter of claims 1–24 of the '366 patent would have been obvious over Ma and TR (alone or with additional references), and Ma and Jung (alone or with additional references). Pet. 1–2, 11–74. Patent Owner disagrees, focusing, *inter alia*, on Petitioner's argument that an ordinarily skilled artisan would have had reason to combine Ma and TR, or Ma and Jung, which we address below. *See, e.g.*, Prelim. Resp. 4, 32–35, 38, 50.

As is relevant to our analysis, Petitioner relies on Ma combined with TR or Jung as disclosing the limitation that recites "the ranging subchannel comprises at least one block of subcarriers within the communication channel and power levels of subcarriers at both ends of a block are set to zero." Pet. 31–34, 63–65. In the Ma and TR combination, Petitioner asserts that Ma's RACH "comprises at least one block of subcarriers within the communication channel" (*id.* at 31–33 (emphasis omitted)), and TR discloses two "Unmodulated Guard Carriers" at the edge of each bandslot "to relax receiver blocking requirements" (*id.* at 34 ((quoting Ex. 1006, 199 and citing Ex. 1003 ¶ 67; Ex. 1006, 202)). According to Petitioner, the guard carriers at both ends of the bandslot (i.e., block) "are 'not used' and thus the *power levels of guard carriers are set to zero*." *Id.* (citing Ex. 1006, 199, 202, Fig. 8; Ex. 1003 ¶¶ 67, 121).

In the Ma and Jung combination, Petitioner argues that the "limitation is rendered obvious based on Ma's disclosure of this limitation as discussed" in the ground involving Ma and TR "and Jung's disclosure of 'a guard interval in a frequency domain.'" Pet. 63 (quoting Ex. 1010 ¶¶ 43, 76, 105; Ex. 1003 ¶ 160). For the portion of the limitation that recites "power levels of subcarriers at both ends of a block are set to zero," Petitioner points to Jung's disclosure that subcarriers on both ends of a block of subcarriers are "left as" guard intervals "with power level set to zero, i.e., '**null data**' 'or **0-data.'"** *Id.* at 64 (citing Ex. 1010 ¶¶ 42–43, 67, 69, 76, Fig. 5; Ex. 1003 ¶ 161).

Petitioner argues that a person of ordinary skill in the art would have had reason to incorporate TR's guard carrier feature or Jung's null data on both ends of the block of subcarriers of Ma's RACH for similar reasons, including to reduce interference. *Id.* at 11–12 (also identifying reducing adjacent channel emissions, facilitating easy bandslot separation, and relaxing receive blocking requirements as advantages of using a guard carrier and citing Ex. 1003 ¶ 68; Ex. 1006, 199), 60 (citing Ex. 1003 ¶ 84). Petitioner further asserts that implementing TR's guard carrier or Jung's null data "would have been merely the application of a known technique" "to a known system (Ma's OFDMA communication system) ready for improvement to yield predictable results." *Id.* at 12 (citing Ex. 1006, 199; Ex. 1003 ¶ 69), 60. According to Petitioner, an ordinarily skilled artisan "would have had a reasonable expectation of success in this implementation at least because Ma and TR [or Ma and Jung] are related to similar methods and systems." *Id.* at 12 (citing *KSR Int'l Co. v. Teleflex Inc.*, 550 U.S. 398, 417 (2007); Ex. 1003 ¶ 69), 35 (citing Ex. 1003 ¶ 122), 60 (citing Ex. 1003 ¶ 84).

"[A] patent composed of several elements is not proved obvious merely by demonstrating that each of its elements was, independently, known in the prior art." *KSR*, 550 U.S. at 418. "[I]t can be important to identify a reason that would have prompted a person of ordinary skill in the relevant field to combine the elements in the way the claimed new invention does." *Id.* An articulated reason to combine helps to avoid "the distortion caused by hindsight bias." *Id.* at 421.

Petitioner does not show sufficiently, on this record, that the above-discussed disclosures of Ma and TR, or Ma and Jung, would have led an ordinarily skilled artisan to incorporate guard carriers or null data on both ends of the block of subcarriers of Ma's RACH. Specifically, Petitioner's analysis, and Dr. Valenti's testimony in this regard, are both conclusory and fail to explain adequately how or why the ordinarily skilled artisan would have implemented TR's guard carrier or Jung's null data into Ma's RACH structure.[7] *See TriVascular, Inc. v. Samuels*, 812 F.3d 1056, 1066 (Fed. Cir. 2016) ("Although the *KSR* test is flexible, the Board 'must still be careful not to allow hindsight reconstruction of references . . . without any explanation as to *how* or *why* the references would be combined to produce the claimed invention.'" (citation omitted)).

As Patent Owner argues, and Mr. Alberth testifies, Ma does not use "a ranging subchannel that is transmitted on separate frequencies from the data," but rather, "spreads the RACH widely and transmits the RACH at a very low power at the same frequencies and at the same time as the traffic data so that it intentionally, but minimally, interferes with the traffic data

[7] Dr. Valenti's testimony merely mirrors the Petition, and Dr. Valenti does not provide additional explanation to support Petitioner's arguments.

transmitted via the subcarriers on the same frequencies." Prelim. Resp. 32 (citing Ex. 1005 ¶¶ 206, 208, 215, 217, 219); Ex. 2001 ¶¶ 30, 32; *see* Prelim. Resp. 50 (advancing the same arguments against Petitioner's combination of Ma and Jung). Mr. Alberth testifies that adding guard carriers to the end of Ma's RACH "has the effect of reducing the number of carriers transmitting RACH and thus narrowing the available bandwidth available for the RACH signal." Ex. 2001 ¶ 33. Mr. Alberth further explains that incorporating TR's guard carriers or Jung's null data on both ends of the block of subcarriers of Ma's RACH would result in "a 6.25% reduction in bandwidth" such that the modified RACH would have to be transmitted at 6.25% higher power "to achieve the same RACH performance." *Id.* Mr. Alberth testifies that "this increase of power expressly contradicts Ma's instruction that, '[t]he RACH should be transmitted with the power as low as possible to reduce its impact to slow traffic channel'" and "increases the power requirements of the system as a whole, which a [person of ordinary skill in the art] would know is generally undesirable." *Id.* ¶¶ 34–35 (quoting Ex. 1005 ¶ 217) (first alteration in original).

Absent more analysis in the Petition or Dr. Valenti's declaration, we cannot say that Petitioner sufficiently shows that Ma's OFDMA communication system was ready for improvement, or that implementing TR's guard carriers or Jung's null data in Ma's system would have yielded predictable results given the structure of Ma's RACH. *See In re NuVasive, Inc.*, 842 F.3d 1376, 1383 (Fed. Cir. 2016) (stating that "conclusory statements" amount to an "insufficient articulation[] of motivation to combine"; "instead, the finding must be supported by a 'reasoned explanation'" (citation omitted)). Thus, Petitioner fails to demonstrate a reasonable likelihood of prevailing in its assertion that the subject matter of

claims 1–4, 6–12, 14–20, and 22–24 would have been obvious over the combination of Ma and TR, or Ma and Jung. Further, because Petitioner relies on Soliman and Li only for the additional limitations in claims 5 and 21 or 13, respectively, Petitioner also fails to demonstrate a reasonable likelihood of prevailing in its assertion that the subject matter of those claims would have been obvious.

IV. CONCLUSION

Taking account of the information presented in the Petition and the Preliminary Response, and the evidence of record, we determine that Petitioner fails to demonstrate a reasonable likelihood of prevailing at trial as to any challenged claim. Accordingly, we deny the Petition, and do not institute trial.

V. ORDER

It is hereby

ORDERED that the Petition is *denied*, and no trial is instituted.

FOR PETITIONER:

Walter Renner
Jeremy Monaldo
Baile Xie
FISH & RICHARDSON P.C.
axf-ptab@fr.com
jjm@fr.com
xie@fr.com

FOR PATENT OWNER:

Kenneth Weatherwax
Parham Hendifar
Patrick Maloney
LOWENSTEIN WEATHERWAX
weatherwax@lowensteinweatherwax.com
hendifar@lowensteinweatherwax.com
maloney@lowensteinweatherwax.com

Hamad Hamad
CALDWELL, CASSADY & CURRY P.C.
hhamad@caldwellcc.com