Trials@uspto.gov
571-272-7822

Paper 28
Entered: October 28, 2024

UNITED STATES PATENT AND TRADEMARK OFFICE

---

BEFORE THE PATENT TRIAL AND APPEAL BOARD

---

ROKU, INC.,
Petitioner,

v.

ECOLINK INTELLIGENT TECHNOLOGY, INC.,
Patent Owner.

---

IPR2023-00792
Patent 10,692,340 B2

---

Before CHRISTOPHER L. OGDEN, STEVEN M. AMUNDSON, and JASON M. REPKO, *Administrative Patent Judges.*

REPKO, *Administrative Patent Judge*.

JUDGMENT
Final Written Decision
Determining All Challenged Claims Unpatentable
*35 U.S.C. § 318(a)*

# I. INTRODUCTION

Roku, Inc. ("Petitioner") filed a petition requesting an *inter partes* review of claims 1, 2, 6, 11, 12, and 16 of U.S. Patent No. 10,692,340 B2 (Ex. 1001, "the '340 patent"). Paper 2 ("Pet."). Ecolink Intelligent Technology, Inc. ("Patent Owner") filed a Preliminary Response. Paper 7 ("Prelim. Resp.").

On October 31, 2023, the Board instituted an *inter partes* review of all challenged claims based on all grounds in the Petition. Paper 8 ("Inst. Dec."). Patent Owner filed a Response. Paper 13 ("PO Resp."). Petitioner filed a Reply. Paper 15 ("Reply"). Patent Owner filed a Sur-reply. Paper 19 ("Sur-reply"). An oral hearing for this case was held on August 1, 2024. Paper 25.

After the oral hearing, the Board granted supplemental briefing. Paper 24. Petitioner and Patent Owner submitted supplemental briefs. Paper 26 ("Pet. Suppl. Br."); Paper 27 ("PO Suppl. Br.").

We have jurisdiction under 35 U.S.C. § 6. This Final Written Decision is issued under 35 U.S.C. § 318(a). For the reasons that follow, Petitioner has shown by a preponderance of the evidence that claims 1, 2, 6, 11, 12, and 16 are unpatentable.

## *A. Related Matters*

The parties have not identified any related matters. *See* Pet. 3; Paper 4 (Patent Owner's Mandatory Notices); Paper 6 (Petitioner's Updated Mandatory Notices); Paper 12 (Petitioner's Second Updated Mandatory Notices).

## *B. The '340 Patent*

The '340 patent is directed to reducing the occurrence of false alarms in a security system for a home or business. Ex. 1001, Abstract. The system

determines whether a barrier, such as a window or a door, has been opened. *See id.* The alarm device then starts a timer. *Id.* at 24:49–60. Once the timer expires, the system initiates a security response. *Id.* at 24:55–58. To avoid initiating the response, the alarm can be canceled before the timer expires. *Id.* at 24:49–25:13.

### *C. Claims*

Of those challenged, claims 1, 6, 11, and 16 are independent. Claim 1 is reproduced below.

> 1. A barrier alarm device, comprising:
>
> a barrier status detection device for indicating that a barrier monitored by the barrier alarm device has been opened;
>
> a human detection device for indicating that a human being is inside a premises in proximity to the barrier;
>
> a transmitter for transmitting a timed alarm signal to a receiver associated with a security panel, the timed alarm signal for initiating a timer associated with the security panel;
>
> a memory having processor-executable instructions stored thereon; and
>
> a processor coupled to the barrier status detection device, the human detection device, the transmitter, and the memory, for executing the processor-executable instructions that cause the barrier alarm device to:
>
> respond to the barrier status detection device indicating that the barrier has been opened by determining whether the human detection device indicates that the human being is inside the premises in proximity to the barrier; and
>
> transmit, via the transmitter, the timed alarm signal to the receiver only when it is determined that the human detection device indicates that the human being is inside the premises in proximity to the barrier.

Ex. 1001, 29:28–53.

### *D. Evidence*

| Name | Reference | Exhibit No. |
|---|---|---|
| Lamb | US 2016/0247370 A1, published August 25, 2016 | 1009 |
| Williams | US 6,057,764, issued May 2, 2000 | 1010 |
| Sharma | US 7,696,873 B2, issued April 13, 2010 | 1011 |

### *E. Asserted Grounds*

Petitioner asserts that claims 1, 2, 6, 11, 12, and 16 are unpatentable on the following grounds. Pet. 9.

| Claims Challenged | 35 U.S.C. § | Reference(s)/Basis |
|---|---|---|
| 1, 2, 6, 11, 12, 16 | 103 | Lamb, Williams |
| 1, 11 | 103 | Sharma |

## II. ANALYSIS

### *A. Level of Ordinary Skill in the Art*

Petitioner asserts that a person of ordinary skill in the art "would have had a bachelor's degree in computer science, in electrical engineering, or a related field, and approximately two or more years of experience or equivalent study in sensor systems." Pet. 12 (citing Ex. 1003[1] ¶¶ 37–40). Petitioner also asserts that "[a]dditional graduate education could substitute for professional experience, or significant experience in the field could substitute for formal education." *Id.* at 12–13.

Patent Owner disagrees and argues,

> [A person of ordinary skill in the art] would have had at least a bachelor's or equivalent degree in electrical or electronic engineering or an equivalent field, and three or more years of commercial design and development experience in residential or business ***security and alarm systems***.

[1] Exhibit 1003 is the declaration of Bruce McNair.

PO Resp. 5–6 (citing Ex. 2003[2] ¶ 34).

The differences between the two skill levels does not affect the Board's analysis of Petitioner's challenge. In fact, Patent Owner's addition of experience in "security and alarm systems" only increases the skill level of a person of ordinary skill in the art. *Id.* at 6. Our conclusion that Petitioner has shown that all challenged claims are unpatentable is the same under either definition.

*B. The Declaration of Bruce McNair*

Petitioner offers the Declaration of Bruce McNair in support of its Petition. Ex. 1003.

Patent Owner argues that "[i]t is an abuse of discretion to admit expert testimony 'on any issue that is analyzed through the lens of an ordinarily skilled artisan' (e.g., invalidity) where the expert 'does not have ordinary skill in the art.'" PO Resp. 61 (citing *Kyocera Senco Indus. Tools Inc. v. Int'l Trade Comm'n*, 22 F.4th 1369, 1377–78 (Fed. Cir. 2022); *Avail Medsystems, Inc. v. Teladoc Health, Inc.*, IPR2022-00444, Paper 10 at 26 (PTAB July 21, 2022)). According to Patent Owner, Bruce McNair does not meet the definition of a person of ordinary skill in the art because he does not have "three or more years of commercial design and development experience in residential or business security and alarm systems." *Id.* at 62. Patent Owner argues that Bruce McNair's experience in installing security systems for personal use is insufficient to meet this requirement. *Id.*

Even assuming Patent Owner's definition of a person of ordinary skill in the art is correct, we disagree that Bruce McNair lacks ordinary skill in the art.

[2] Exhibit 2003 is the Declaration of James Parker.

Mr. McNair has experience in residential security and alarm systems. For example, Mr. McNair, testifies that he has designed and installed home security, sensor, and alarm systems for personal use. Ex. 1003 ¶ 12. According to his testimony, he installed wired alarm systems for himself and his father in the 1970s, wireless systems in the early 1980s, and updated a residential alarm system in the early 2000s. Ex. 2004, 182:14–22.

Mr. McNair has ample professional experience in the technology underlying those residential security systems and the technology at issue in this case. For example, Mr. McNair was "involved the design of digital and analog hardware" at Bell Labs. Ex. 1003 ¶ 10. Patent Owner does not provide a sufficient reason to exclude the network security systems that Mr. McNair designed at Bell Labs from the "business security and alarm systems" in its definition. PO Resp. 6, 62. Also, Bruce McNair asserts that, during his work at the US Army Electronics Command at Fort Monmouth, NJ, he "became familiar with classified military equipment designed to detect and protect against surreptitious physical compromise of the encryption equipment." Ex. 1003 ¶ 8.

Mr. McNair's experience with wireless communication and cryptographic security systems is relevant (*see, e.g.*, *id.* ¶ 10), even if it involved more complex systems, because "to be qualified to offer expert testimony on issues from the vantage point of an ordinarily skilled artisan in a patent case, an expert must *at a minimum* possess ordinary skill in the art." *Kyocera*, 22 F.4th at 1377–78 (emphasis added).

Considering the entire record before us, we see little reason to distinguish between different types of commercial security and alarm systems on the basis of their complexity, as Patent Owner's arguments suggest. *See* PO Resp. 62. Even so, we question the relevance of such a

distinction in our determination of whether to give weight to Mr. McNair's testimony because Mr. McNair has extensive expertise in the technology underlying all security systems that he has worked on, commercial or personal. *See* Ex. 1003 ¶¶ 8, 10, 12.

In sum, we determine that Mr. McNair has experience in residential security and alarm systems and sixty years of experience in the research, design, development, and engineering of the technology underlying such systems that is sufficient for him to at minimum possess ordinary skill in the art. *Id.* ¶¶ 6–12. Also, his years of experience at the Security and System Reliability Architecture Group at AT&T Bell labs alone (*id.* ¶ 10; *see also, id.* at p. 147) meets the three or more years of commercial design and development experience in security and alarm systems, under Patent Owner's definition (PO Resp. 6 (citing Ex. 2003 ¶ 34)).

Thus, on this record, we disagree with Patent Owner's argument that Bruce McNair lacks knowledge and skill at least of an ordinarily skilled artisan—even under Patent Owner's definition. *See* PO Resp. 6. In this decision, we assign Bruce McNair's testimony the appropriate weight, as discussed in our analysis below.

### *C. Claim Construction*

"The Board is required to construe 'only those terms . . . that are in controversy, and only to the extent necessary to resolve the controversy.'" *Realtime Data, LLC v. Iancu*, 912 F.3d 1368, 1375 (Fed. Cir. 2019) (citing *Vivid Techs., Inc. v. Am. Sci. & Eng'g, Inc.*, 200 F.3d 795, 803 (Fed. Cir. 1999)).

In interpreting the claims here, we use the same claim construction standard that would be used to construe the claims in a civil action under 35 U.S.C. § 282(b). 37 C.F.R. § 42.100(b) (2024). Under that standard,

claim terms are generally given their ordinary and customary meaning as would be understood by one with ordinary skill in the art in the context of the specification, the prosecution history, other claims, and extrinsic evidence. *Phillips v. AWH Corp.*, 415 F.3d 1303, 1312–17 (Fed. Cir. 2005) (en banc).

*1. Timed Alarm Signal*

Claim 1 recites, in part,

> transmitting a *timed alarm signal* to a receiver associated with a security panel, the timed alarm signal for initiating a timer associated with the security panel.

Ex. 1001, 29:35–38 (emphasis added). Similarly, claim 11 recites, in part,

> transmitting by the barrier alarm device a *timed alarm signal* to the central security panel for the purpose of initiating a timer associated with the central security panel only when it is determined that the human detection device indicates that the human being is in inside the premises and in proximity to the barrier.

*Id.* at 30:58–63 (emphasis added)). The parties disagree on the meaning of "timed alarm signal." *See, e.g.*, Reply 4–5, Sur-reply 11.

*a. The Arguments*

Petitioner asserts that the recited "timed alarm signal" is a signal "'for initiating a timer' associated with the security panel." Pet. 29–30.

Patent Owner disagrees with Petitioner, arguing that it renders meaningless the word "alarm." PO Resp. 15–16. Patent Owner also contends that "all of the functional and purpose components of Petitioner's proposed construction of 'timed alarm signal' (i.e., used for initiating a timer associated with the security panel) have no patentable weight." Sur-reply 11. According to Patent Owner, "Petitioner's proposed construction sets forth nothing more than an intended use or function of the signal generated by [the transmitter]." *Id.* at 12.

Although it does not offer an explicit construction of its own, Patent Owner argues that the "timed alarm signal" is different from a status signal, a bypass signal, or a signal that causes an alarm system to be disarmed. PO Resp. 18–27. It must, for example, "indicate[] that an alarm condition exists." *Id.* at 18 (citing Ex. 1001, 4:52–54, 5:52–54, 10:14–21). According to Patent Owner, "When a 'timed alarm signal' is transmitted, a security response will be initiated if the alarm system is not disarmed within a predetermined time." PO Resp. 25–26 (citing Ex. 1001, 17:8–34; Ex. 1003 ¶ 32; Ex. 2004 81:21–82:5).

In its supplemental briefing, Petitioner responds that the "timed alarm signal" limitation cannot be read out of the challenged claims because the timed alarm signal is associated with executable software instructions "that perform the claim's recited software functionality enabling the claimed alarm to identify appropriate alarm signals for transmission at appropriate times." Pet. Suppl. Br. 5. Petitioner also argues that, by claim differentiation, the "timed alarm signal" must be structurally and functionally different from the "immediate alarm signal" recited in claims 2 and 12. *Id.* at 6–7.

Patent Owner argues that Petitioner failed to dispute, in its supplemental briefing, that Petitioner's proposed construction is merely a statement of purpose or intent, and according to Patent Owner, this omission is dispositive. PO Suppl. Br. 3–4. Patent Owner also argues that Petitioner does not dispute that it is only an unclaimed security panel that "is responsible for recognizing, interpreting, and using the 'timed alarm signal' transmitted by the barrier alarm device and for initiating the security panel's timer." *Id.* at 5.

*b. The Board's Construction*

For the reasons that follow, we apply the same construction for "timed alarm signal" that we used in the Decision on Institution: a signal in an alarm system for initiating a timer associated with the security panel. Inst. Dec. 11.

*i. The Claim Language*

We begin our claim-construction analysis by considering the claim language. Here, claims 1 and 11 expressly clarify and limit what the "timed alarm signal" is. The barrier alarm device's processor determines when to transmit the signal. Ex. 1001, 29:41–44. The timed alarm signal's purpose is expressly recited: initiating a timer. *Id.* at 29:36–38 (claim 1); *id.* at 30:58–63 (claim 11). In both claims, the barrier alarm device transmits the "timed alarm signal" only when it is determined that the detection device indicates that a person is inside. *Id.* at 29:50–53 (claim 1); *id.* at 30:61–63 (claim 11). The receiver of that transmitted signal is the security panel. *Id.* at 29:50–51 (claim 1); *id.* at 30:59 (claim 11).

Patent Owner's arguments about the recited timer are unclear because Patent Owner refers to "Petitioner's proposed construction" of the claim language, not the claim language itself:

> *Petitioner's proposed construction* sets forth nothing more than an intended use or function of the signal generated by Lamb's alarm device—i.e., "that is used for initiating a timer associated with the security panel."

Sur-reply 12 (citing Reply 4, 5, 7, 9) (emphasis added). According to Patent Owner, "the functional and purpose components of Petitioner's proposed construction of 'timed alarm signal' have no patentable weight and cannot be used to distinguish Lamb for prior art purposes." *Id.* at 9 (emphasis

added).[3] Yet the Board is construing the claim here, not the functional aspects of Petitioner's proposed construction.

Either way, "defining a particular claim term by its function is not improper." *Hill-Rom Servs., Inc. v. Stryker Corp.*, 755 F.3d 1367, 1374–75 (Fed. Cir. 2014). For example, the Court of Appeals for the Federal Circuit has found that there is "nothing improper about defining 'datalink' as a link that conveys data." *Id.* at 1375. "Many devices take their names from the functions they perform. The examples are innumerable, such as 'filter,' 'brake,' 'clamp,' 'screwdriver,' or 'lock.'" *Id.* (quoting *Greenberg v. Ethicon Endo-Surgery, Inc.*, 91 F.3d 1580, 1583 (Fed. Cir. 1996)).

Here, the functions recited in claims 1 and 11 limit what the "timed alarm signal" indicates, how it is used as well as its relationship to a timer, alarm, and security panel. If not for a timer associated with the security panel, there is no clear purpose for transmitting the "timed alarm signal" only when the specific determination is made, and that claimed determination would be rendered superfluous. A construction that requires the purpose of initiating a timer associated with the security panel is consistent with rest of the functions and steps recited in claims 1 and 11. Considering the claim as a whole, the other expressly recited functions and steps support our decision to include the signal's purpose in our construction.

---

[3] In the order granting supplemental briefing, the Board raised the issue of whether the "timed alarm signal" was non-functional descriptive material. Paper 24, 3. In response, neither party argued that the "timed alarm signal" should be treated as such under the printed-matter doctrine. *See* Pet. Suppl. Brief; PO Suppl. Brief. 4 n.5 (arguing it is not necessary to reach this issue). We need not address the issue further here.

Patent Owner argues that the Board's construction improperly repeats language that already appears in the claim. *See* Sur-reply 1, 3. "'Ideally' such constructions should be avoided." *VLSI Tech. LLC v. Intel Corp.*, 53 F.4th 646, 653 (Fed. Cir. 2022) (citing *Apple, Inc. v. Ameranth, Inc.*, 842 F.3d 1229, 1237 (Fed. Cir. 2016)). "While a construction that introduces redundancy into a claim is disfavored, it is not foreclosed." *Id.* (citing *SimpleAir, Inc. v. Sony Ericsson Mobile Commc'ns AB*, 820 F.3d 419, 429 (Fed. Cir. 2016)). For example, a claim could expressly recite the definition of the construed term. *See id.* (explaining that, in the claim at issue, "the 'force region' limitation is best understood as containing a definition of the force region"). Similarly, limitations reciting the function and purpose of the "timed alarm signal" here could be viewed as containing the definition of the term.

Our construction is further supported by the use of the word "timed" in "*timed* alarm signal." The claim language and specification indicate that the signal itself has characteristics that allow the security panel's receiver to recognize it, and, potentially, perform the function that the signal indicates. Those characteristics could be a serial number or any other information to distinguish it from the other signals that may use a modified version of the serial number. *See* Ex. 1001, 17:63–18:3. The security panel starts a timer "that allows a person to cancel a security response" before the timer expires. *Id.* at 4:16–20. These features are examples of what may distinguish a "timed alarm signal" from other signals. *See id.* at 29:15–26 (explaining that the embodiments are only illustrative). Thus, the word "timed" indicates that our construction should incorporate the timer feature.

Patent Owner largely agrees with this point, but its arguments characterizing the Board's construction ignore the "timer" feature. *See*

PO Resp. 17–27 (distinguishing other signals). Essentially, Patent Owner sets up a straw-man argument by arguing that the Board construes "timed alarm signal" as nothing more than a signal. *See id.* at 18. From this mischaracterization of the Board's construction, Patent Owner proceeds to argue that there is no difference between a "timed alarm signal" and any other signals disclosed in the '340 patent: the "alarm signal," the "bypass signal," the "barrier status signal," or signals that disarm the system. *See id.* at 17 (discussing an alarm signal); *id.* at 18–24 (discussing barrier status signals), 24–27 (discussing bypass signals); Sur-reply 2–3. For similar reasons, Patent Owner argues that the Board's construction is overbroad and unsupported by the specification. PO Resp. 18–24. Patent Owner argues that, if the "timed alarm signal" is merely a signal, then Petitioner has not shown that Lamb is prior art. Sur-reply 11–12.

Claims 1 and 11 recite a "*timed* alarm signal," not merely an "alarm signal." Claims 6 and 16 recite a "first alarm signal." The Board did not preliminarily construe "alarm signal" as a signal transmitted by an alarm device, as Patent Owner argues. *See, e.g.*, PO Resp. 15 (citing Inst. Dec. 9, 11, 14); Sur-reply 2–3. Rather, the Board construed the "first alarm signal" in claims 6 and 11 as "a signal in an alarm system that is 'indicative of the barrier being opened.'" Inst. Dec. 14. That is, "timed alarm signal" and "first alarm signal" appear in different claims, and the Board separately construed each in its Decision on Institution. *Id.* at 9, 11, 14.

Patent Owner, though, argues as if "timed alarm signal" and "alarm signal" should be treated as the same term. *See* PO Resp. 14–27 (referring to a "[timed/first] alarm signal"). Patent Owner argues that "timed alarm signal" and "first alarm signal" share the phrase "alarm signal." *See id.* at 15–16; Sur-reply 4. This suggests that Patent Owner views the "timed alarm

signal" as an alarm signal that is somehow itself timed. PO Resp. 15–16; Sur-reply 4. We see no support for this reading. Rather, the timed alarm signal is for initiating a timer. *See* Ex. 1001, 29:36–37 (claim 1), 30:58–60 (claim 11); *id.* at 4:16–20 (describing a countdown timer for an alarm).

Patent Owner's arguments about the other disclosed signals do not squarely address the Board's construction of "timed alarm signal." For example, Patent Owner does not explain how the other signals disclosed in the challenged patent's specification initiate a timer associated with the security panel, as in the Board's construction. *See* PO Resp. 14–27; Sur-reply 6–7, 11–12. Indeed, as discussed above, the Board's construction accounts for and is consistent with the specification's description that the security panel needs to differentiate between the signals. *See* Ex. 1001, 17:63–18:3; *see also infra* Section II.C.1.b.ii (discussing the specification). The construction calls for initiating a timer associated with the security panel. Yet the patent does not disclose that every signal is for initiating a timer.

Nor does Patent Owner squarely address the fact that the Board's construction includes the timer aspects that are the basis for Petitioner's argument that the challenged patent is not entitled to the filing dates of the parent applications, including Lamb. *See, e.g.*, Pet. 4–5.

Patent Owner also argues that the language of the claims in related patents should affect our analysis here. PO Resp. 23–24, 27. Yet these arguments are based on the flawed treatment of timed alarm signals and first alarm signals. *See id.* at 23–24 (referring to the "[timed / first] alarm signal"); *id.* at 27 (same). Removing "timed" and "first" from the claim limitations and arguing that the phrase "alarm signal" should be treated the same way, ignores the differences between the embodiments that are

reflected in the plain language of the claim: "the timed alarm signal for initiating a timer" (Ex. 1001, 29:36–38; *id.* at 30:59–60) and "the first alarm signal indicative of a barrier being opened" (*id.* at 30:14–15; *id.* at 31:17–18). The specification also describes different responses to receiving the timed alarm signal and receiving an indication that barrier has been opened. *See, e.g.*, Ex. 1001, 16:64–67 (describing the "response to transmitting the timed alarm signal" and the response to "detecting that the barrier has been opened"); *see also infra* Sections II.C.1.b.ii, II.C.3.b (discussing the specification). The claim language and specification support Bruce McNair's testimony that "[a]larm signals have been given meanings [in the challenged patent] that depend on their context." Ex. 2004, 117:6–7. Patent Owner's arguments about the related patents, though, ignore the context that the term "alarm signal" is being used—across different disclosed embodiments, claims, and patents. PO Resp. 23–24, 27. Thus, we disagree with Patent Owner's argument about the claim language in the related patents. *Id.*

*ii. The Specification*

The patent's specification "may reveal a special definition given to a claim term." *Phillips*, 415 F.3d at 1316. Or it may reveal "an intentional disclaimer, or disavowal, of claim scope." *Id.* "The patentee's lexicography must, of course, appear 'with reasonable clarity, deliberateness, and precision' before it can affect the claim.'" *Renishaw PLC v. Marposs Societa' per Azioni*, 158 F.3d 1243, 1249 (Fed. Cir. 1998). The patentee can disavow claim scope with language in the specification or the prosecution history. *Poly-Am., L.P. v. API Indus., Inc.*, 839 F.3d 1131, 1136 (Fed. Cir. 2016). "In either case, the standard for disavowal is exacting, requiring clear and unequivocal evidence that the claimed invention includes or does not include a particular feature." *Id.*

We determine that the ’340 patent does not define “timed alarm signal” with the reasonable clarity, deliberateness, and precision required for a patentee’s lexicography or disavowal. In fact, the ’340 patent explains that the embodiments are only illustrative. *See, e.g.*, Ex. 1001, 29:15–26.

Even so, a skilled artisan “is deemed to read the claim term . . . in the context of the entire patent, including the specification.” *Phillips,* 415 F.3d at 1313. Here, the specification is consistent with the conclusion that the claimed “timed alarm signal” is a signal in an alarm system for initiating a timer associated with the security panel. For example, the challenged patent explains that “a timed alarm signal is generated by the barrier alarm device and transmitted to a security panel which, in response, start[s] a countdown timer that allows a person to cancel a security response from occurring if a certain action is taken before the countdown timer expires.” Ex. 1001, 4:16–20.

As discussed above, the specification supports the view that the timed alarm signal is different from other signals: “The timed alarm signal may comprise a serial number of barrier alarm device 600 . . . . Of course, the timed alarm signal [and] the alarm signal could comprise other information, *so long as central security panel 116 can differentiate between two signals*.” *Id.* at 17:63–18:3 (emphasis added). Here, the specification explains that the “timed alarm signal” is not defined by the informational content that it carries (a particular serial number, for example) but by its function as an instruction. Thus, the specification supports including the aspect of initiating a timer associated with a security panel in our construction of the recited “timed alarm signal.”

Patent Owner argues that neither the status signal nor the bypass signal is a timed alarm signal, suggesting that there are additional unrecited

limitations beyond those in the Board's construction. PO Resp. 18–24, 60–61. We disagree.

Patent Owner's argument about those signals is based on the view that the timed alarm signal in claims 1 and 11 and first alarm signal in claims 6 and 16 are the same. They are not. Claims 1 and 11 are directed to transmitting the timed alarm signal (a barrier alarm device), and claims 6 and 16 are directed to receiving the first alarm signal (the role of a central security panel). Ex. 1001, 29:36–38 (claim 1); *id.* at 30:59–60 (claim 11); *id.* at 30:14–15 (claim 6); *id.* at 31:17–18 (claim 16). That is, the claim language recites the signals are used in different devices and in different ways. Patent Owner's arguments (PO Resp. 18–24, 60–61) about status and bypass signals are not supported by the challenged patent specification or the plain language of the claim. Thus, we disagree with Patent Owner on this issue (*id.* at 18–27, 60–61), and do not credit James Parker's corresponding testimony (Ex. 2003 ¶¶ 58–78, 171–172).

*iii. The Prosecution History*

"[T]he prosecution history can often inform the meaning of the claim language by demonstrating how the inventor understood the invention and whether the inventor limited the invention in the course of prosecution, making the claim scope narrower than it would otherwise be." *Phillips,* 415 F.3d at 1317. Here, we see nothing in the prosecution history that changes our conclusion about the construction of "timed alarm signal."

Patent Owner argues that the prosecution history shows that a "timed alarm signal" is not the status signal described in the '340 patent. PO Resp. 21 (citing Ex. 1001, Fig. 10). Patent Owner identifies prior art that is owned by Patent Owner ("Lamb-611") that was cited during prosecution in an Examiner's rejection of claims that were later amended. *Id.* at 22

(citing Ex. 2002). Lamb-611 and the challenged patent use similar terms to described the technical features. *See* Ex. 2001 ¶¶ 27, 58, 59, 72, 103, 110. Patent Owner argues that Lamb-611 distinguishes a "local alarm signal" from a "status message." PO Resp. 22 (citing Ex. 2001 ¶¶ 27, 58, 59, 72, 103, 110). For similar reasons, Patent Owner argues that the prosecution history shows that "[timed/first] alarm signal" is not a bypass signal. *Id.* at 26 (citing Ex. 2001 ¶¶ 58, 59, 72–75, 103–105, 107–111).

We disagree with Patent Owner's arguments here (*id.* at 21–22, 26) for at least the reason they conflate multiple distinct embodiments that use different signals. *See supra* Section II.C.1.b.ii.

Also, the basis for Patent Owner's arguments about the prosecution history is a mischaracterization of the Board's construction. *See* PO Resp. 21–22, 26. As discussed below, the "first alarm signal" is a different claim term in a different claim, and the Board's claim-construction analysis reflects this. *See* Inst. Dec. 14; *see infra* Section II.C.3. Patent Owner's prosecution-history arguments neither squarely address the Board's construction of "timed alarm signal" nor adequately explain how the prosecution history affects our construction of that term. *See* PO Resp. 21–24, 26. For this additional reason, we disagree with Patent Owner's arguments about the prosecution history. *See id.*

Lastly, we disagree with Patent Owner's characterization of the prosecution history. *See id.* at 21–22, 26. A "timed alarm signal" was not discussed or at issue during the prosecution of the application that led to the challenged patent. *See, e.g.*, Ex. 1002, 168–73 (rejection in view of Lamb-611); *id.* at 242–43 (response to the rejection in view of Lamb-611); *id.* at 251–56 (amendments to the claims); *id.* at 257 (remarks). Rather, the '340 patent applicant's remarks in its response to the Examiner's rejection are

directed to how Lamb-611 does not determine whether a human being is inside a monitored premises. *Id.* at 242–43. Other remarks by the patent applicant are related to correcting typographical errors. *See id.* at 251–56 (amendments to the claims), 257 (remarks). For this additional reason, we disagree with Patent Owner's arguments about the prosecution history. *See* PO Resp. 21–22, 26.

*c. Conclusion*

We conclude that the claim language and specification indicate that the ordinary and customary meaning of "timed alarm signal" is a signal in an alarm system for initiating a timer associated with the security panel, and the prosecution history is consistent with that conclusion.

*2. Immediate Alarm Signal*

Claim 2 recites,

> The barrier alarm of claim 1, wherein the processor-executable instructions further comprise instructions that cause the barrier alarm device to transmit, via the transmitter, an *immediate alarm signal* to the receiver for causing a security response to be initiated when it is determined that the human detection device does not indicate that the human being is inside the premises in proximity to the barrier.

Ex. 1001, 29:54–60 (emphasis added). Claim 12 recites similar limitations. *Id.* at 30:64–31:2.

Patent Owner argues that we should construe "immediate alarm signal" to mean "an alarm signal that instructs the security panel to initiate a security response *immediately*." PO Resp. 28 (citing Ex. 1001, 17:46–51, 19:58–61, 26:65–27:2, claims 1, 2, 11, 12; Ex. 2003 ¶ 79).

In the Decision on Institution, the Board did not construe "immediate alarm signal" as requiring an immediate security response. Inst. Dec. 13. Even so, the Board alternatively explained that Lamb discloses that it "takes

at least one action" after receiving the alarm signal and that is sufficient to meet the claim limitation. *See id.* at 33 (citing Ex. 1009 ¶ 53; Pet. 44). For the same reasons, we need not construe "immediate alarm signal" here because Petitioner shows that Lamb teaches or suggests the "immediate alarm signal" even under Patent Owner's proposed construction. *See* Pet. 44 (citing Ex. 1009 ¶ 53). Our reasoning is presented in detail below. *See infra* Section II.D.4.a.

*3. First Alarm Signal*

Claim 6 recites, in part, "receive *a first alarm signal* from a barrier alarm device that monitors a barrier of a premises, the first alarm signal indicative of the barrier being opened." Ex. 1001, 30:13–15 (emphasis added). Claim 16 recites, in part, "receiving *a first alarm signal* from a barrier alarm device that monitors a barrier of a premises, the first alarm signal indicative of the barrier being opened." *Id.* at 31:16–18 (emphasis added).

*a. The Board's Construction*

In its Decision on Institution, the Board construed the "first alarm signal" in claims 6 and 16 as "a signal in an alarm system that is 'indicative of the barrier being opened.'" Inst. Dec. 14. The Board's construction of "first alarm signal" is different than the construction for "timed alarm signal." *See id.* at 9; *see also supra* Section II.C.1 (discussing the construction). In this decision, we adopt the preliminary construction from the Decision on Institution. Inst. Dec. 14. Our reasoning follows.

*b. Analysis*

Patent Owner argues the "first alarm signal" and "timed alarm signal" limitations together, referring to them collectively as "[timed/first] alarm signal." *See* PO Resp. 14–27. We disagree with Patent Owner's arguments

about our construction of the "timed alarm signal" to the extent that they apply to the "first alarm signal" for same reasons discussed in our analysis of the "timed alarm signal." *See supra* Section II.C.1.

Apart from those reasons, we disagree with Patent Owner's collective treatment of the first alarm signal and timed alarm signal because the plain language of claims 6 and 16 shows that a first alarm signal is not the same as a timed alarm signal. *See* PO Resp. 14–27. For example, claims 1 and 11 recite that the "timed alarm signal" is "for initiating a timer." Ex. 1001, 29:36–38 (claim 1); *id.* at 30:59–61 (claim 11). Claims 6 and 16 do not expressly recite that the "first alarm signal" is "for initiating a timer." Rather, claims 6 and 16 recite that the first alarm signal is "indicative of the barrier being opened." *Id.* at 30:14–15 (claim 6); *id.* at 31:17–18 (claim 16).

Also, the timed alarm signal and first alarm signal are used in different ways by the claimed systems and method: In claim 1, the barrier alarm device detects human proximity as a condition for transmitting the timed alarm signal to the security panel (*id.* at 29:50–53), but in claim 6, the central security panel detects human proximity in response to receiving the first alarm signal from the barrier alarm device (*id.* at 30:16–18). Claims 11 and 16 recite similar limitations. *Id.* at 30:50 (claim 11); *id.* at 32:1–4 (claim 16).[4]

[4] Claim 11 recites the functions similar to those in claim 1 as steps in a method. Ex. 1001, 30:50–63. Likewise, the method recited in claim 16 incorporates proximity as a condition for starting the timer: "starting a countdown timer *when it is determined* that the human being has been indicated to be inside the premises *in proximity to the barrier*." *Id.* at 32:1–4 (emphasis added).

We agree with Petitioner that the claimed differences align with different devices in the challenged patent. *See* Reply 7–8. Figure 2, below, shows a barrier alarm device like the one recited in claim 1. Ex. 1001, Fig. 2.

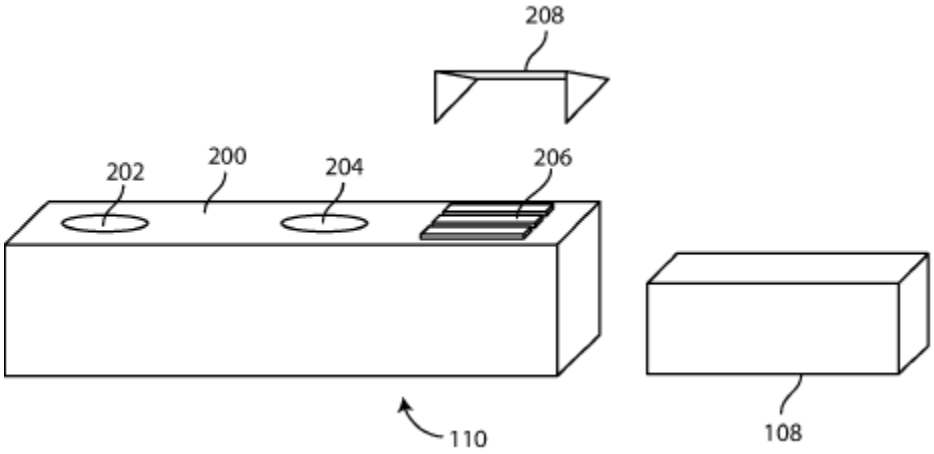


This figure shows magnet 108 and reed switch assembly[5] 110 with housing 200. *Id.* at 7:3, 7:30–52. On the font face, housing 200 has status indicator 204, user interface 202, and apertures 206. *Id.* at 7:40–42. Deflection device 208, shown above the housing, guides signals emanating from housing 200 to detect a human. *Id.* at 7:53–55.

Claim 6 recites a central security panel. *Id.* at 30:4. The specification explains that central security panel 116 receives and interprets "raw data" from discrete sensors located outside the panel itself. *Id.* at 5:54–58. Figure 1, below, shows a central security panel in an example security system. *Id.* at 3:1–2.

[5] The challenged patent uses the terms "reed switch assembly" and "barrier alarm device" interchangeably. Ex. 1001, 6:61–62.

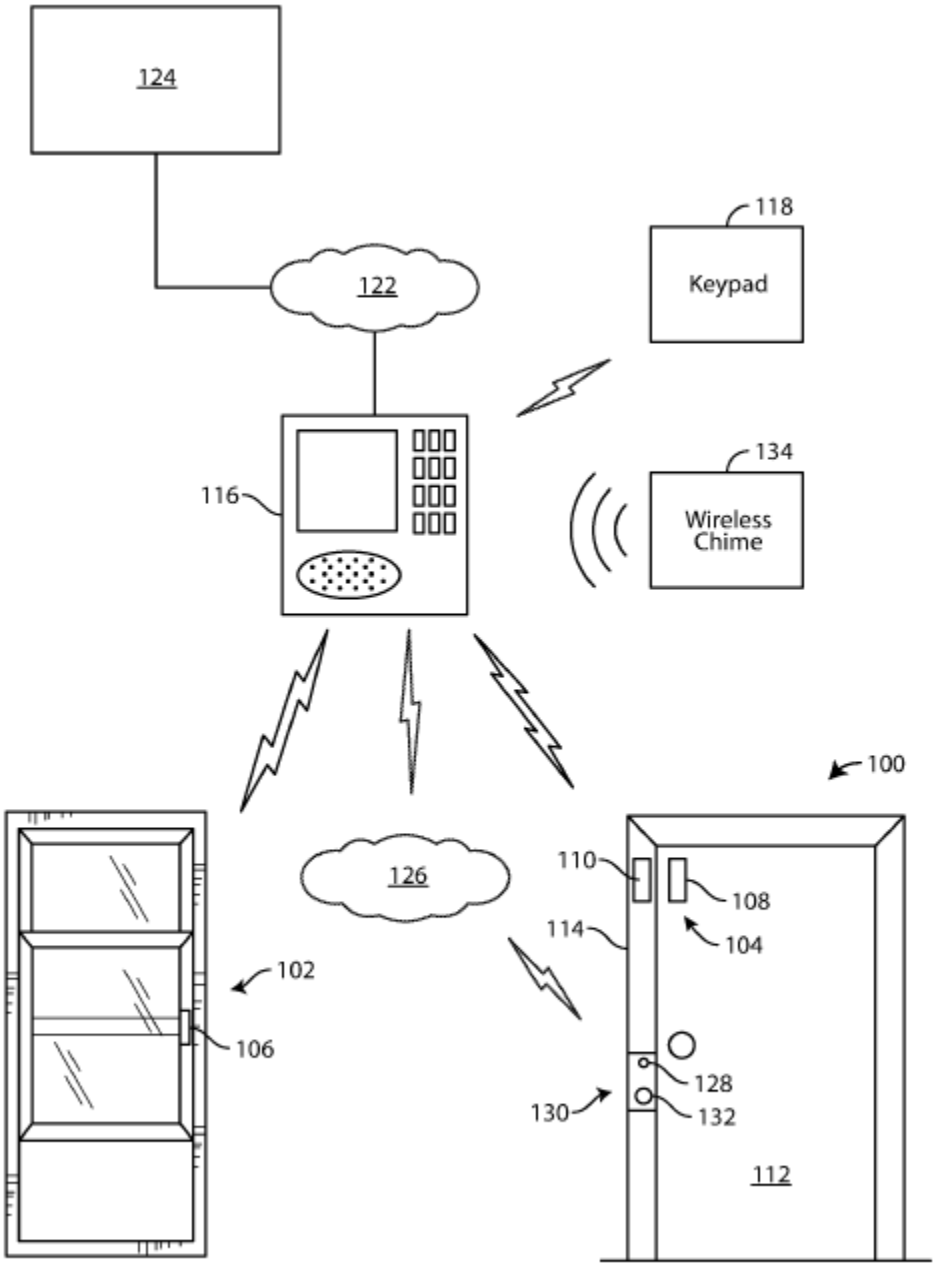


FIG. 1

In the embodiment shown here, central security panel 116 monitors barrier alarm devices 104 and 106, and other security devices. *Id.* at 5:29–33. Notably, reed switch assembly 110 and magnet 108 are separate from central security panel 116 and are part of barrier alarm device 104. *Id.* at 4:38–40, Fig. 1.

The challenged patent explains that, in some embodiments, "central security panel 116 simply receives raw data from the barrier alarm devices and determines, based on the data, whether a local alarm condition has occurred." *Id.* at 5:55–58. This aligns with claim 6 because that claim recites a central security panel that responds to the reception of the first alarm signal from the barrier alarm device "by determining whether a human being has been indicated to be *inside the premises and in proximity to the barrier*." *Id.* at 30:16–18 (emphasis added). By contrast, claim 1 recites a processor and transmitter in the barrier alarm device that transmit the timed alarm signal to a receiver associated with the security panel "only when it is determined that the human detection device indicates that the human being is in *inside the premises and in proximity to the barrier*." *Id.* at 29:50–53 (emphasis added). That is, the timed alarm signal and the first alarm signal differ in their relationship to the proximity detection.

Patent Owner's argument that the "first alarm signal" is not a barrier status signal is not supported by the claim language. PO Resp. 18–24. According to Patent Owner, "The 'barrier status signal' indicates whether the monitored barrier is open or closed." *Id.* at 19 (citing Ex. 1001, 11:52–65). Claims 6 and 16, though, recite that the first alarm signal is "indicative of the barrier being opened." Ex. 1001, 30:13–15 (claim 6), 31:17–18 (claim 16). Similarly, Patent Owner argues that "[t]he security panel 'receives [the barrier status signal and the human status signal] and determines whether a local alarm condition exists and *whether to transmit* an alarm signal to one or more remote devices 406 of interested parties and/or to a remote monitoring station 124." PO Resp. 19 (quoting Ex. 1001, 11:40–45) (emphasis added).

But the security panel of claim 6 does not transmit the first alarm signal in response to receiving the human status signal. Instead, it responds to the reception of the first alarm signal by making the recited determination. Ex. 1001, 30:16–18. The specification describes a "response to transmitting the timed alarm signal" and the response to "detecting that the barrier has been opened," for example. Ex. 1001, 16:64–67. In these ways, Patent Owner's arguments contradict the claim language and the corresponding parts of the specification. *See* PO Resp. 18–24.

Generally, Patent Owner's arguments about the bypass and status signals fail to appreciate the differences between the various disclosed and claimed embodiments. *See id.* at 18–27. For instance, Patent Owner argues that the prosecution history and claims support its argument. *See id.* at 20–24, 26. Yet Patent Owner discusses the transmitting features of the barrier alarm device in claims 1 and 11 instead of the receiving features of the security panel recited in claims 6 and 16. *See, e.g.*, *id.* at 20 ("Thus, the specification supports that a status signal is used by the 'barrier alarm device' to determine whether to *transmit* an 'alarm signal, but a status signal is not an 'alarm signal.'"); *id.* at 22 ("When a 'local alarm signal' *is sent*, however, the central controller 116 need not make this same determination . . . ." (emphasis added)); *id.* at 22–23 (discussing only claims 1 and 11 when arguing that the claims support its interpretation).

Also, we disagree with Patent Owner's arguments about the prosecution history for all the reasons previously discussed with the respect to the timed alarm signal. *See supra* Section II.C.1.b.iii. The same reasons apply to the first alarm signal because Patent Owner argues as if those two terms were the same. *See* PO Resp. 21–22, 26.

Patent Owner's arguments about the other patents are based on the flawed treatment of timed alarm signals and first alarm signals. *See id.* at 23–24 (referring to the "[timed / first] alarm signal"); *id.* at 27 (same). Patent Owner's argument ignores that the '340 patent discloses multiple embodiments. *Id.* at 23–24, 27. Removing "timed" and "first" from the claim limitations and arguing that the phrase "alarm signal" should be treated the same way, ignores the differences between the embodiments that are reflected in the plain language of the claims and the specification. *Id.* As Bruce McNair testified, "Alarm signals have been given meanings [in the challenged patent] that depend on their context." Ex. 2004, 117:6–7. Patent Owner's arguments largely ignore that context—across different disclosed embodiments, claims, and patents. PO Resp. 23–24, 27. We disagree with Patent Owner's argument about the related patents (*id.*) for these reasons and the reasons discussed with respect to the timed alarm signal (*supra* Section II.C.1.b.i)

In sum, because the arguments about status and bypass do not consider the differences between the timed alarm signal in claims 1 and 11 and the first alarm signal in claims 6 and 16, as described above, we disagree with Patent Owner on this issue (PO Resp. 18–27), and do not credit the corresponding testimony of James Parker (Ex. 2003 ¶¶ 58–78).

As with the timed alarm signal recited in claims 1 and 11, claims 6 and 16 contain part of the definition of the term itself because those claims recite that the signal is "indicative of the barrier being opened." Ex. 1001, 30:14–15 (claim 6), 31:17–18 (claim 16). This aligns with the embodiment where the central security panel determines the alarm condition based on the raw data. *See id.* at 5:55–58.

*c. Conclusion*

As in the Decision on Institution, we construe the "first alarm signal" in claims 6 and 16 as a signal in an alarm system that is indicative of the barrier being opened. *See* Inst. Dec. 14.

*D. Obviousness: Lamb and Williams*

Petitioner asserts that claims 1, 2, 6, 11, 12, and 16 are unpatentable as obvious over Lamb and Williams. Pet. 13–56.

*1. Lamb*

Lamb is generally directed to reducing the number of false alarms that may occur in a home security system. Ex. 1009, code (57). Lamb's barrier alarm device determines whether a person is in proximity to an open door or window—that is, a "barrier." *Id.* ¶ 18. If so, the system presumes that the person is authorized to be on the premises and does not trigger an alarm. *Id.* Otherwise, an alarm is triggered. *Id.*

*2. Williams*

In Williams, authorized persons wear portable devices, like a bracelet, to enter a space protected by an alarm system. Ex. 1010, 1:44–63, 2:25–38. The portable devices transmit an authorization code to prevent triggering the alarm when the person is not an intruder. *Id.* This system operates on a timer. *Id.* If the timer expires before an authorized code is received from the person wearing a device, an alarm is triggered. *Id.* at 1:64–2:8, 4:32–39. If the authorized code is received in time, an alarm is not triggered. *Id.*

*3. Claims 1 and 11*

*a. Timed Alarm Signal Limitations*

Claim 1 recites, in part, "a transmitter for transmitting a *timed alarm signal* to a receiver associated with a security panel, *the timed alarm signal* for initiating a timer associated with the security panel" and instructions that

cause the device to "transmit, via the transmitter, the *timed alarm signal* to the receiver." Ex. 1001, 29:35–38, 29:50–51 (emphasis added). Similarly, claim 11 recites, in part, "transmitting by the barrier alarm device a *timed alarm signal* to the central security panel." *Id.* at 30:58–59 (emphasis added). We refer to these limitations as the "Timed Alarm Signal Limitations."

Petitioner asserts that its Lamb-Williams combination teaches or suggests the Timed Alarm Signal Limitations. Pet. 25–33. In particular, Petitioner asserts that Lamb's transmitter sends an alarm signal to security panel 116. *Id.* at 25–28 (citing Ex. 1009 ¶¶ 20, 22, 29, 36, 37, 41, Figs. 1, 3; Ex. 1003 ¶¶ 64, 65, 67, 68). Petitioner argues that a person of ordinary skill in the art would have been motivated to modify Lamb to transmit a timed alarm signal in view of Williams. *Id.* at 28 (citing Ex. 1010, 2:35–38; Ex. 1003 ¶¶ 66, 69). Doing so would have provided "'significantly greater personal protection to individuals occupying a secure space' by verifying that the potential alarm is indeed caused by an authorized person, and not an unauthorized person," the Petition states. *Id.* (quoting Ex. 1010, 2:35–38).

*b. Construction of Timed Alarm Signal*

Patent Owner argues that a status signal is not the "timed alarm signal." PO Resp. 33–35. According to Patent Owner, any signals transmitted in response to Williams's test 34 are nothing more than status signals. *Id.* at 33–34 (citing Pet. 29–33; Ex. 2003 ¶¶ 87–88; Ex. 1010, Fig. 2, 3:56–62; Ex. 1003 ¶ 71; Ex. 1001, 11:33–12:3). In Patent Owner's view, "test 34 simply asks whether motion has been detected," and if so, "a timer is initialized in step 41." *Id.* at 34 (Ex. 1010, Fig. 2; Ex. 2003 ¶ 88).

How Williams operates is largely undisputed. *Compare* PO Resp. 34, *with* Pet. 29–30. Below is a portion of the flowchart from Figure 2 of

Williams with Petitioner's highlights on the steps relevant to the timer limitations. Pet. 30.

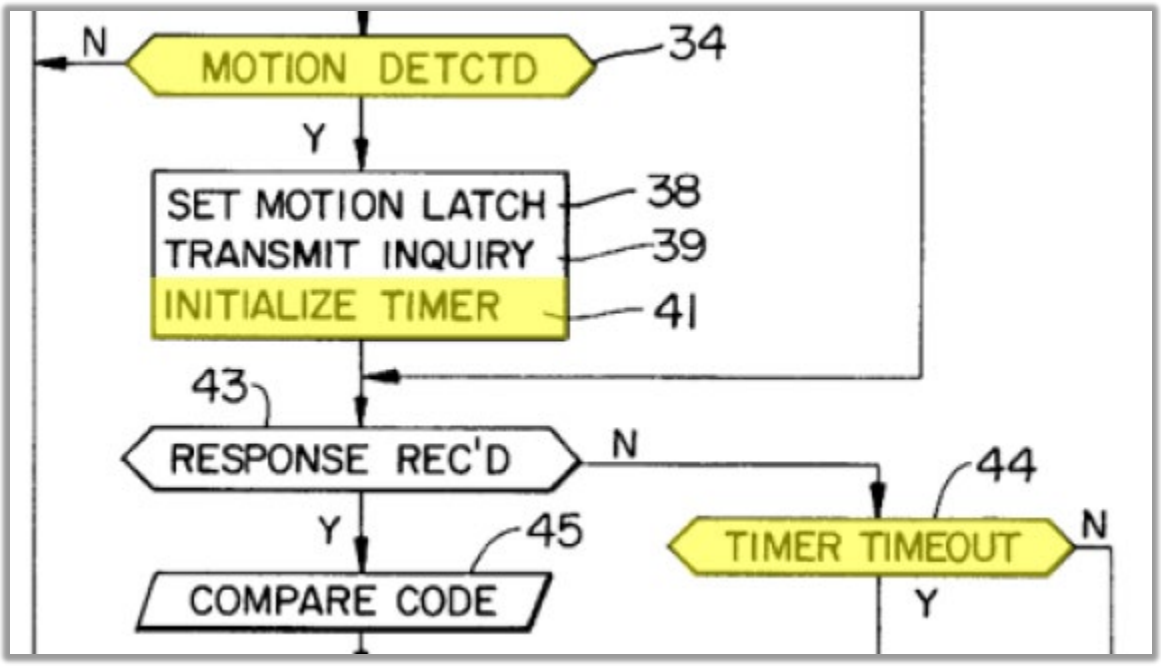


In Figure 2, test 34 detects motion. *See* Ex. 1010, 3:49–4:39. If motion is detected, step 38 sets the "motion latch," and step 39 transmits an inquiry signal for an authorized person nearby. *Id.* Step 41 sets the timer for receiving a response to that inquiry. *Id.*

Petitioner persuasively explains why the signal in the Lamb-Williams combination is "timed alarm signal"—i.e., a signal in an alarm system for initiating a timer associated with the security panel. *See* § II.C.1. Petitioner relies on modifying Lamb's signals with Williams's control-panel timer to arrive at the claimed alarm signal. *See* Pet. 17–18, 29–33. Petitioner identifies the relevant part of Lamb to be modified:

> Lamb discloses a system, including a barrier alarm device that, in response to determining that a barrier has been opened and a person is inside the premises, transmits a "bypass signal" to central security panel 116 to ignore future alarm signals and/or disarm the system because the detected human is considered an "authorized" person. . . . It would have been obvious to a POSITA

> to modify Lamb to instead transmit a timed alarm signal and wait for reception of an authorized code from an authorized device, as taught by Williams, to enhance system security.

Pet. 17 (citing Ex. 1009 ¶¶ 37, 40, 58–59; Ex. 1003 ¶ 52) (formatting removed). Petitioner sufficiently explains how the signals in the Lamb-Williams combination would have been used for initiating a timer associated with the security panel:

> Williams discloses that in response to receiving a signal that a human has been detected, "control panel" initializes a timer, and Williams' signal is therefore a timed alarm signal associated with the control panel—the claimed "timed alarm signal" is only "for initiating a timer" associated with the security panel. Upon timing out, the control panel sets an alarm.

*Id.* at 29–30 (formatting removed). Thus, the Petition explains how the Lamb-Williams combination[6] meets the Board's construction of "timed alarm signal."

Patent Owner's arguments about the bypass, status, or other signals in the challenged patent's specification (*see* PO Resp. 18–60; Sur-reply 2, 4–7) mischaracterize Petitioner's arguments about the timer (Pet. 29–30). For example, according to Patent Owner, Petitioner cannot show that the Lamb-Williams combination discloses or teaches the "timed alarm signal" because Petitioner applies an "incorrect, overbroad construction." PO Resp. 32. Yet Petitioner does not treat the "timed alarm signal" as any signal in an alarm system. *See id.* at 18–60; Sur-reply 2, 4–7; Pet. 29–30. For example,

---

[6] Patent Owner argues that "Petitioner is admittedly not relying on any of Williams' signals in Ground 1." Sur-reply 14 (citing Reply 15). As discussed above, Ground 1 is based on a combination of teachings: "It would have been obvious to a POSITA to modify Lamb to instead transmit a timed alarm signal and wait for reception of an authorized code from an authorized device, as taught by Williams, to enhance system security." Pet. 17.

Petitioner states that "timed alarm signal" is a signal "'for initiating a timer' associated with the security panel." Pet. 29–30. Petitioner applies this definition in its discussion of William's operation. *Id.*

We disagree with Patent Owner's arguments about the Timed Alarm Signal Limitations (PO Resp. 32–33) for the additional reason that they do not address how the signal would be transmitted in the Lamb-Williams combination described in the Petition (Pet. 29–30). Rather, Patent Owner's arguments characterizing Williams's signals as status signals are nothing more than an individual attacks on Williams. *See* PO Resp. 32–33. Petitioner relies on a combination of Lamb and Williams to address the timed alarm signal: Petitioner proposes modifying "Lamb to instead transmit a timed alarm signal and wait for reception of an authorized code from an authorized device, as taught by Williams, to enhance system security." Pet. 17. This combination is not squarely addressed by Patent Owner's arguments about other signals. PO Resp. 32–33.

Patent Owner also argues that Lamb discloses that its barrier alarm device transmits a bypass signal or nothing at all when a human is detected. *Id.* at 31 n.6 (citing Ex. 1009 ¶¶ 29, 40, 50, 60, Fig. 5, claims 2 and 13). Even so, Petitioner does not contend that Lamb discloses the "timed alarm signal." *See* Pet. 17. Here, Patent Owner's argument (PO Resp. 31 n. 6) is another individual attack because it does not squarely address Petitioner's reliance on the combined teachings of Lamb and Williams (Pet. 17).

Patent Owner argues that the term "alarm" is meaningless if "timed alarm signal" is construed as a signal in an alarm system for initiating a timer associated with the security panel. PO Resp. 32–33 (citing *Ebates Performance Mktg., Inc. v. Int'l Bus. Machs. Corp.*, IPR2022-00438, Paper 34 at 24–25 (PTAB Oct. 2, 2023)); Sur-reply 1. We disagree for the reasons

discussed in Section II.C.1. In particular, the alarm system is part of the Board's construction of "timed alarm signal": a signal *in an alarm system* for initiating a timer associated with the security panel.

There is no dispute that the signals in Petitioner's combination are "in an alarm system." Indeed, Petitioner asserts that "Lamb discloses a barrier alarm device." Pet. 19–22 (citing Ex. 1009 ¶¶ 17, 19, 30, 39, Figs. 1, 3, 4). Petitioner has sufficiently shown that Lamb's barrier alarm device and central security panel are capable of keeping time and sending a timed alarm signal. *Id.* at 19 (citing Ex. 1009 ¶¶ 30–37, 43).

Thus, Petitioner sufficiently shows that the Lamb-Williams combination teaches the Timed Alarm Signal Limitations.

*c. Petitioner's Obviousness Rationale*

*i. Petitioner's Reasoning*

Petitioner proposes adding authorization codes and a timer to Lamb's system to verify that the person detected inside is authorized to be there. Pet. 17–18. Specifically, when Lamb's system detects a person inside the premises and a barrier has been opened, the system transmits a bypass signal to the security panel to disarm the system or ignore future alarm signals. Ex. 1009 ¶ 37. In the Lamb-Williams combination, Petitioner proposes modifying "Lamb to instead transmit a timed alarm signal and wait for reception of an authorized code from an authorized device, as taught by Williams, to enhance system security." Pet. 17 (citing Ex. 1003 ¶ 52). According to the Petition, this would have provided "'significantly greater personal protection to individuals occupying a secure space' by verifying that the potential alarm is indeed caused by an authorized person, and not an unauthorized person." *Id.* at 28 (citing Ex. 1010, 2:35–38; Ex. 1003 ¶¶ 66, 69).

According to Patent Owner, Petitioner and its expert have not provided sufficient evidence that the proposed modification would have actually enhanced security. PO Resp. 49 (citing Pet. 18; Ex. 1003 ¶ 53). In Patent Owner's view, Williams's statements apply to the prior-art systems that are unable to prevent false alarms and those that use a smart badge. *Id.* at 50 (citing Ex. 1010, 1:13–53; Ex. 1009, Abst., ¶¶ 2, 5–7). Patent Owner argues that, because Lamb prevents false alarms and does not use a smart badge, Petitioner's proposed modifications would not have benefitted Lamb's system. *Id.* (citing Ex. 2003 ¶ 129).

We disagree. Petitioner's obviousness rationale is persuasive and supported by the evidence of record. *See In re Magnum Oil Tools Int'l, Ltd.*, 829 F.3d 1364, 1380 (Fed. Cir. 2016). Essentially, Lamb assumes that the detected person is authorized. Ex. 1009 ¶¶ 37, 40, 58–59, *cited in* Pet. 17. Williams's system permits authorized persons to use the space, while retaining security against intruders. Ex. 1010, 2:31–38, *cited in* Pet. 18. Petitioner persuasively supports the assertion that waiting for an authorization code would enhance system security in Lamb because one of ordinary skill in the art would been motivated "to verify—and not assume—that a potential alarm was triggered by an authorized person." Pet. 18 (citing Ex. 1010, 2:35–38). We credit Bruce McNair's testimony on this issue (Ex. 1003 ¶¶ 52–54) because it is supported by the record (Ex. 1010, 2:31–38; Ex. 1009 ¶¶ 37, 40, 58–59).

*ii. Assumptions*

Patent Owner argues that the user of Williams's system is also making an assumption: The barrier was opened by an authorized person if the person's device is present. PO Resp. 50 (citing Pet. 18; Ex. 1003 ¶ 53; Ex. 1010, Abst. 1:46–2:3, 2:25–38; Ex. 2003 ¶¶ 130–131). Patent Owner

argues that, contrary to this assumption, an authorized person could misplace the device or an intruder could have stolen it. *Id.* at 50, 52 (citing Ex. 2003 ¶¶ 135–136). Patent Owner argues that Williams must account for visitors and guests. *Id.* (citing Ex. 2003 ¶ 137). In Patent Owner's view, William's assumption "is not fool proof." *Id.* at 50–51.

But Petitioner need not show that the system resulting from the proposed combination is "fool proof." *Cf. Acorda Therapeutics, Inc. v. Roxane Lab'y, Inc.*, 903 F.3d 1310, 1333 (Fed. Cir. 2018) ("This court has long rejected a requirement of '[c]onclusive proof of efficacy' for obviousness."); *Intel Corp. v. Qualcomm Inc.*, 21 F.4th 784, 800 (Fed. Cir. 2021) ("Our caselaw is clear. It's not necessary to show that a combination is 'the best option, only that it be a *suitable* option.'" (quoting *PAR Pharm., Inc. v. TWI Pharms., Inc.*, 773 F.3d 1186, 1197–98 (Fed. Cir. 2014))). Here, Petitioner has persuasively shown that Williams's additional verification increases security because there are fewer scenarios in which an authorized user could trigger a false alarm. *See* Pet. 18. Although there may still be scenarios in which an unauthorized user could enter undetected, we see nothing on this record suggesting that solving this problem would have been beyond the capabilities of an ordinarily skilled artisan—to the extent this could be considered a flaw and not merely a consequence of not having an impenetrable security system. Indeed, a person of ordinary skill in the art is a person of ordinary creativity—not an automaton. *KSR*, 550 U.S. at 421. Likewise, we see nothing on the record that would suggest that it would have been beyond the capabilities of a person having ordinary skill in the art to implement some system or policy to reduce the likelihood of a user leaving their badge behind. PO Resp. 51.

Patent Owner argues that "Petitioner has failed to show that the proposed modifications to Lamb would provide ***any benefit.***" *Id.*. According to Patent Owner, "Petitioner and its expert do not explain why Lamb's assumption (i.e., that if a barrier is opened and a person is detected inside the premises in proximity to the barrier it is assumed that the person is authorized to be inside the premises) is unreasonable or does not make sense." *Id.* (citing Pet. 18; Ex. 1003 ¶ 53). Patent Owner argues that Petitioner cannot do so because "[w]hen an intruder attempts to enter a premises by opening a barrier, Lamb's system will correctly generate an alarm because the intruder is not yet inside the premises." *Id.* (citing Ex. 2003 ¶ 132; Ex. 1009, Fig. 5, ¶¶ 21, 29, 37).

Here, Petitioner proposes adding a verification to Lamb to improve security, which does not require Lamb's assumption to be unreasonable or non-sensical. Pet. 17–18. Petitioner simply argues that Lamb's assumption does not hold in all cases, and that in those cases, Williams would improve Lamb's operation. *Id.* On this point, we agree with Petitioner for the reasons discussed above. *See supra* Section II.D.3.c.i. Thus, we disagree with Patent Owner's arguments about the assumptions in Lamb and Williams. *See* PO Resp. 50–53.

*iii. Same Function*

Patent Owner also argues that the purpose of Lamb's human-detection device is to verify that an authorized person opened the barrier. PO Resp. 44 (citing Ex. 1009, Abst., Fig. 5, ¶¶ 28–29, 37, 40–43, 50; Ex. 2003 ¶ 113). According to Patent Owner, Williams's codes perform the same function. *Id.* at 45 (citing Ex. 2003 ¶ 115). Patent Owner concludes that Petitioner's proposed modifications render Lamb's human-detection step superfluous, redundant, and unnecessary. *Id.* at 45–46. In Patent Owner's view, one of

ordinary skill in the art would have eliminated Lamb's human-detection device, a move that Patent Owner argues would have reduced costs. *Id.* at 46.

Patent Owner acknowledges Lamb's assumption: "If a barrier is opened and a human is detected inside the premises in proximity to the barrier, *Lamb's system assumes* the person that opened the barrier is authorized to be inside the premises." *Id.* at 44–45. This assumption is the basis for Petitioner's obviousness rationale. *See* Pet. 17–18.

That is, Petitioner reasons that Lamb's security would be improved by taking additional steps to attempt to verify—and not just assume—that the person detected inside the premises is authorized to be there. *Id.* Overall, the similarities between the references support Petitioner's obviousness rationale. For example, Petitioner persuasively explains that both Lamb and Williams secure the premises from unauthorized people without inhibiting those who are authorized. *See id.* (citing Ex. 1009 ¶¶ 37, 40, 58–59; Ex. 1010, 1:13–2:38, 5:63–66). Williams provides an additional layer of assurance that authorized entry will be detected. Ex. 1010, 2:31–34, 5:63–66, *cited in* Pet. 18.

As for Patent Owner's argument that one of ordinary skill in the art would have eliminated Lamb's human-detection device (PO Resp. 46–47), Petitioner does not propose doing this. Rather, in Petitioner's combination, the Lamb's human-detection device and William's authorization codes work together to secure the premises. Pet. 17–18. It is irrelevant that Patent Owner's hypothetical combination does not fall within the scope of the claims. PO Resp. 46–47. Because James Parker's testimony is based on Patent Owner's hypothetical combination, rather than Petitioner's

combination, we credit Bruce McNair's testimony (Ex. 1003 ¶¶ 52–54) over Mr. Parker's (*see* Ex. 2003 ¶¶ 113–118) on this point.

Thus, we disagree with Patent Owner that Lamb's human-detection device is superfluous, redundant, and unnecessary. PO Resp. 44–46.

*iv. Authorization Code*

Patent Owner argues that Petitioner's rationale for modifying Lamb is "not logically connected to Petitioner's proposed modifications to Lamb that are relevant to the Claims (i.e., modifying Lamb's barrier alarm device to transmit a 'timed alarm signal' to a security panel and modifying Lamb's security panel to initialize a timer)." PO Resp. 47 (citing Ex. 2003 ¶ 120). In Patent Owner's view, "While Petitioner's sole proposed rationale for modifying Lamb in view of Williams may be relevant to incorporating Williams' user-worn 'personal device,' such a device is not a claimed feature of the Claims." *Id.* at 48 (citing Ex. 2003 ¶ 121).

We disagree that Petitioner's rationale is not logically connected to the timed alarm signal. The codes are connected to the operation of the timer: Williams's system triggers an alarm if the timer expires before an authorized code is received from the person wearing a device. Ex. 1010, 1:64–2:8, 4:32–39. This is part of the authorization process that Petitioner argues would enhance security. *See* Pet. 17–18. Although the personal device is not recited in the claim, we see nothing in the claim that precludes the use of such a device. Nor does Patent Owner offer any construction that would. *See* PO Resp.; Sur-reply. And, for all the reasons discussed above, we agree that Petitioner's combination teaches the recited timed alarm signal. *See supra* Section II.D.3.a.

Patent Owner also argues that there were other much simpler embodiments in Williams that Petitioner could have chosen instead.

PO Resp. 48–49 (citing Ex. 2003 ¶ 125; Ex. 1010, 6:23–26, 7:64–65, 8:33–39). But Petitioner need not show that its combination was the best option. *See Intel,* 21 F.4th at 800. Thus, we disagree with Patent Owner's argument here. PO Resp. 48–49.

*v. Drawbacks*

Patent Owner argues there are numerous drawbacks to Petitioner's proposed modifications to Lamb that outweigh any benefits. PO Resp. 51–56; Sur-reply 19–20. In particular, Patent Owner argues that the user must wear or carry a personal device when the user is inside the secured premises. PO Resp. 51. According to Patent Owner, wearing a device is inconvenient, and the device is easily stolen or lost, especially by visitors or guests. *Id.* at 51–52 (citing Ex. 2003 ¶ 134–137). Patent Owner argues that modifying Lamb with Williams would not have been a suitable option. Sur-reply 21 n.4.

We disagree for the reasons discussed in § II.D.3.c.ii. In particular, Petitioner need not show that its proposed modification would have been the best option or that it would have been "fool proof." *See supra* Section II.D.3.c.ii.

Also, Patent Owner's argument about stolen devices is a drawback only when the system is misused. *See* PO Resp. 51–52. But, even in scenarios in which an unauthorized user could gain access to the personal device or otherwise enter the secured premises, we see nothing on the record that would suggest that the scenarios identified by Patent Owner could not have been solved by a person of ordinary creativity. *See id.*

As for guests, Lamb and Williams offer features to accommodate them. Reply 20. For example, Lamb notes that the "'home' arming feature" in most security systems arms all doors and window sensors but does not

arm any interior motion sensors. Ex. 1009 ¶ 5, *cited in* Reply 20. Likewise, Williams's system can be disarmed when guests are present: "On the other hand, if a personal identification number has been entered, an affirmative result of test 62 will reach a series of tests 65–68 to determine if the user has pressed the . . . disarm key . . . in accordance with the invention." Ex. 1010, 5:17–22, *cited in* Reply 20.

Even if Lamb's system already eliminates the need for users to walk to the panel and disarm the system, as Patent Owner argues (Sur-reply 20–21), Petitioner's combination does not depend on those details (Pet. 17–18). Nor does the law of obviousness require that Petitioner show that its combination is optimal under every possible scenario or potential application, as discussed above. *See supra* Section II.D.3.c.ii (discussing the case law on obviousness); *cf. Intel*, 21 F.4th at 800 (discussed above). For these additional reasons, we disagree with Patent Owner's argument about lost devices and guest access. *See supra* Section II.D.3.c.ii (discussing additional, independent reasons why the Board disagrees with Patent Owner's argument).

Patent Owner also argues that Williams's personal device is either active or passive, both of which have downsides. PO Resp. 53 (citing Ex. 1010, 1:67–2:10, 6:18–22; Ex. 2003 ¶ 138).

According to Patent Owner, active devices need an internal power source, like a battery, to send and receive signals, increasing their size and weight and decreasing their convenience. *Id.* at 53–54 (citing Ex. 2003 ¶¶ 139, 141, 142). Patent Owner argues that active-device systems are more complex than passive-device systems because active-device systems require transceivers and solutions for interference, which also

makes them more expensive and less practical for common consumer applications. *Id.* at 53–55 (citing Ex. 2003 ¶¶ 139, 142, 143).

Patent Owner argues that using passive devices in Williams is not feasible because of (1) their limited read ranges, (2) the cost of numerous readers both in initial setup and maintenance, and (3) inconsistency in performance caused by environmental conditions and physical obstacles. *Id.* at 55–56 (citing Ex. 2003 ¶¶ 145–147).

For the reasons discussed in Section II.D.3.c.i, we disagree with Patent Owner's conclusion that adding Williams would have incurred a cost without any benefit:

> Accordingly, Petitioner has failed to show that the proposed modifications to Lamb would provide ***any benefit***. On the other hand, the proposed modifications to Lamb have numerous drawbacks . . . .

*Id.* at 51. Even if Patent Owner's arguments about increased costs and complexity are true, Patent Owner has merely identified the price for additional security. *See id.* at 51–56. Additional security is not free. Patent Owner does not dispute this. Here, Patent Owner is weighting the alleged costs against no benefit. *See id.* at 51, 56. For at least the reason that we disagree with Patent Owner that there is no benefit to modifying Williams, Patent Owner's cost-benefit analysis is flawed. *See id.* at 51–56.

Also missing from Patent Owner's argument is additional technical reasoning from its expert, James Parker, or support from the record. *See id.* at 51–56. Rather, the corresponding parts from Mr. Parker's declaration merely repeat the arguments from Patent Owner's Response. *Compare id.* at 51–56, *with* Ex. 2003 ¶¶ 134–147. Mr. Parker's assertions about Lamb and Williams appearing in paragraphs 134 through 147 of his declaration are entitled to little weight because those paragraphs merely repeat Patent

Owner's conclusory assertions and speculation without adding supporting evidence or technical reasoning. *See Xerox Corp. v. Bytemark, Inc.*, IPR2022-00624, Paper 9 at 15 (PTAB Aug. 24, 2022) (precedential). Thus, we credit Bruce McNair's testimony on the benefits of adding Williams to Lamb (Ex. 1003 ¶¶ 52–54) over James Parker's testimony on this issue (Ex. 2003 ¶¶ 134–147).

Lastly, and perhaps more generally, Patent Owner's argument fails to consider the costs and likelihood of a security incident. PO Resp. 51–56; Sur-reply 19–20. As Petitioner notes, Patent Owner's "speculation that carrying a personal device would be 'a major inconvenience' or that visitors and guests would misplace or forget the personal device [Pet. 51–53] ignores the more pressing 'inconvenience' of an insecure system." Reply 19. To determine whether a security enhancement justifies the cost, one must account for the costs and likelihood associated with an intrusion or other security incident. Williams's system could be used in numerous situations. *See, e.g.*, Ex. 1010, 8:33–39 (discussing commercial or government applications). Each situation may be unique. The costs of a security incident across the potential applications of Williams likely varies widely. To claim that the costs outweigh the benefits in all situations, one must believe that the proposed combination has no benefit because even a modest enhancement to security may be justified depending on the risk to life or property that the system is being used to prevent.

Yet, if one agrees that Petitioner has shown that its proposed enhancements do indeed increase security to some extent, which the Board does (*see supra* Section II.D.3.c.i), then the security threat at hand would need to be known before determining whether the benefits outweigh the costs, as Patent Owner urges the Board to consider (*see* PO Resp. 49–56).

We agree with Petitioner's characterization that Patent Owner essentially argues that the proposed combination "fails to enhance security to [Patent Owner's] subjective satisfaction." Reply 19. Because it fails to account for the cost of a security incident or an insecure system, Patent Owner's argument about cost is fundamentally flawed or at the least insufficiently supported by the record. PO Resp. 49–56; Sur-reply 19–20.

*vi. Principle of Operation*

Patent Owner argues that the proposed combination would change Lamb's basic principle of operation. PO Resp. 56–58. In Patent Owner's view, Lamb does not need to do anything to prevent false alarms because Lamb's system assumes that motion detected inside a premises is from someone authorized to be there. *Id.* at 56–57 (citing Ex. 2003 ¶ 159; Ex. 1009 ¶¶ 18–19). Patent Owner argues that the proposed modification to Lamb would fundamentally alter Lamb's basic principle of operation in two ways: (1) Lamb's system would assume that motion detected is of an unauthorized person, and (2) Lamb's system would require users to wear a personal device. *Id.* at 57–58 (citing Ex. 1009 ¶¶ 18, 29; Ex. 1010, 1:54–2:10, 2:25–34; 3:9–38; Ex. 2003 ¶¶ 162–164; Pet. 17–18).

We disagree with Patent Owner's characterization of Lamb and Williams. *Id.* Rather, Williams also assumes that motion detected is of an unauthorized person unless the personal device indicates otherwise. Ex. 1010, 1:54–2:10, 2:25–34, 3:9–38. The record favors Petitioner's reasoning that a person of ordinary skill in the art would have been motivated to verify instead of just assuming that a potential alarm was triggered by an authorized person. Pet. 18.

Overall, the similarities between the references tend to support Petitioner's obviousness rationale. Petitioner sufficiently explains that both

Lamb and Williams describe that their purpose is to secure the premises from unauthorized people without inhibiting authorized people. *See id.* at 17–18 (citing Ex. 1009 ¶¶ 37, 40, 58–59; Ex. 1010, 1:13–2:38, 5:63–66). Williams provides an additional layer of assurance that authorized entry will be detected, according to the Petition. Pet. 18 (citing Ex. 1010, 2:31–34, 5:63–66; Ex. 1003 ¶ 53).

Thus, we disagree that the proposed combination would have changed Lamb's basic principle of operation. PO Resp. 56–58.

*vii. Intended Purpose*

Patent Owner argues that Petitioner's proposed modification would have frustrated Lamb's intended purpose of reducing false alarms. PO Resp. 58–59. In Patent Owner's view, Lamb's system automatically prevents false alarms without the need for the user to do anything because (1) it does not send an alarm signal or (2) it will send a bypass signal when someone accidentally opens a door or window. *Id.* at 58–59 (citing Ex. 1009 ¶¶ 2, 18, 29). Patent Owner argues that Lamb, however, requires the user to do something to prevent false alarms: carry a personal device. *Id.* at 59 (citing Ex. 1010, 1:54–2:10, 2:25–34). According to Patent Owner, adding a personal device to Lamb's system would have increased the number of false alarms because a false alarm would occur if the user forgets the personal device, if the personal device loses power, or if the device malfunctions. *Id.* Patent Owner argues that Petitioner does not explain why a person of ordinary skill in the art would have looked to enhance security at the expense of reducing false alarms, which is one of Lamb's expressed goals. *Id.* (citing Pet. 17–19).

We disagree for the reasons discussed above in Section II.D.3.c.i. Also, apart from attorney argument, we see no evidence that forgetting the

device or the device's failure rate would have happened at such a frequency that it would have discouraged one of ordinary skill in the art from making the proposed combination. Mr. Parker's assertions in paragraph 167 of his declaration are entitled to little weight because those paragraphs merely repeat Patent Owner's conclusory assertions and speculation without adding supporting evidence or technical reasoning. *See Xerox*, IPR2022-00624, Paper 9 at 15. Instead, we credit Bruce McNair's testimony on the benefits of adding Williams to Lamb (Ex. 1003 ¶¶ 52–54) over James Parker's testimony on this issue (Ex. 2003 ¶ 167).

Also, "the expectation of success need only be reasonable, not absolute." *Pfizer, Inc. v. Apotex, Inc.*, 480 F.3d 1348, 1364, 1367–68 (Fed. Cir. 2007); *see also Acorda*, 903 F.3d at 1333 ("This court has long rejected a requirement of '[c]onclusive proof of efficacy' for obviousness.").

Thus, we disagree with Patent Owner's argument about intended purpose. *See* PO Resp. 58–59.

*viii. Fundamental Differences*

Patent Owner argues that Lamb and Williams are fundamentally different. PO Resp. 8–11, 59–60; Sur-reply 22. According to Patent Owner, Petitioner does not make any attempt to address the significant, fundamental differences between the references. PO Resp. 59–60 (citing Ex. 2003 ¶¶ 148–156). In Patent Owner's view, Lamb receives two device inputs (one from a human-detection device and another from a barrier-status detection device) and responds in different ways to them (transmitting different signals), and Williams receives one input (an activation from an alarm switch or motion detector) and responds to it in the same way every time (transmitting a signal). *Id.* at 9–10. Patent Owner points out that Williams relies on a personal device to prevent false alarms, whereas Lamb, operating

under a different principle, does not. *Id.* at 10. In particular, Patent Owner argues that the references operate under different assumptions about whether a detected person is authorized. *Id.* at 10–11.

Patent Owner's argument here does not squarely address Petitioner's combination. Instead, Patent Owner merely identifies the differences that have little relevance to Petitioner's combination. *See id.* at 8–11, 59–60. Essentially, Patent Owner's argument assumes that Petitioner is incorporating Williams in Lamb without any modification. But obviousness is based on "what the combined teachings of the references would have suggested to those having ordinary skill in the art" and "does not require an actual, physical substitution of elements." *In re Mouttet*, 686 F.3d 1322, 1332–33 (Fed. Cir. 2012).

Even so, we disagree that the references are fundamentally different. Rather, Petitioner persuasively supports the assertion that waiting for an authorization code would have enhanced security in Lamb because one of ordinary skill in the art would been motivated to verify that a potential alarm was triggered by an authorized person. Pet. 18 (citing Ex. 1010, 2:35–38). In fact, Petitioner persuasively explains why both references secure the premises from unauthorized people without inhibiting authorized people. *See id.* at 17–18 (citing Ex. 1009 ¶¶ 37, 40, 58–59; Ex. 1010, 1:13–2:38, 5:63–66).

Also, we disagree with Patent Owner's arguments about how the different assumptions in Lamb and Williams affect the obviousness rationale for the reasons discussed above. *See supra* Section II.D.3.c.ii. Rather, Petitioner's obviousness rationale is that Lamb's assumption does not hold in all cases and that, in those cases, Williams would have improved Lamb's operation. *See* Pet. 17–18. We disagree to the extent that Patent Owner

argues that any differences would have discouraged one of ordinary skill in the art from combining the references. PO Resp. 9–10. To the contrary, we agree with Petitioner that one of ordinary skill in the art would have been motivated to combine the teachings. *See* Pet. 17–18.

Thus, we disagree that Petitioner's obviousness rationale is deficient and that Lamb and Williams are fundamentally different in the way that Patent Owner argues. *See* PO Resp. 8–11, 59–60.

*d. Lamb's Status as Prior Art*

Patent Owner's arguments about Lamb's status as prior art are based, in part, on its argument that "the functional and purpose components of Petitioner's proposed construction of 'timed alarm signal' have no patentable weight." Sur-reply 9; *see also* PO Suppl. Br. 3–4 (arguing "Petitioner's failure to dispute that the statement of purpose or intent language of its construction of 'timed alarm signal' is not entitled to patentable weight is also dispositive that Petitioner cannot meet its burden of showing that Lamb is prior art to the Lamb Claims under Petitioner's construction"). As discussed in Section II.C.1, we disagree that the timer aspects of the Timed Alarm Signal Limitations lack patentable weight under the Board's construction, and we also disagree that Petitioner treats the timed alarm signal as merely any signal. *See, e.g.*, PO Suppl. Br. 3.

Patent Owner also argues that "even if the functional and purpose components are included, Petitioner and its expert's admissions and arguments demonstrate that these components are inherently disclosed by Lamb." Sur-reply 9, 12. We disagree.

As an initial matter, it is unclear how the timed alarm signal would be inherently disclosed by Lamb. *Id.* For example, claim 1 recites a memory with executable instructions to control the transmitter's operation with

respect to the timer, and a security panel to receive the signal. Ex. 1001, 29:41–44. Claim 11 recites similar limitations in a method. *Id.* at 30:58–59. Patent Owner has not identified any inherent disclosure in Lamb that would support its argument. Sur-reply 12.

Instead, Patent Owner's argument rests on a mischaracterization of the testimony from Petitioner's expert, Bruce McNair, and the Petition's arguments. Sur-reply 12. Mr. McNair's statement that Lamb provides "the structure that everything rides on" merely points out how Lamb is being used in the proposed combination, not that Lamb teaches the signals being sent by that structure. Ex. 2004, 167:5–6. The same is true of the statement that he is "relying on the mechanisms of Lamb to actually hold off the alarm." *Id.* at 94:7–17.

Patent Owner's argument suggesting that Petitioner's Ground 1 does not propose changing Lamb's signal contradicts the Petition. Sur-reply 12 (citing Reply 14–15); *id.* at 21–22 (characterizing Petitioner's combination as not changing Lamb). According to the Petition, "It would have been obvious to a POSITA to modify Lamb *to instead transmit a timed alarm signal* and wait for reception of an authorized code from an authorized device, as taught by Williams, to enhance system security." Pet. 17 (citing Ex. 1009 ¶¶ 37, 40, 58–59; Ex. 1003 ¶ 52) (emphasis added). That is, the entire basis for Petitioner's obviousness rationale is that Lamb lacks the timed alarm signals. *See id.* at 19–22.

Patent Owner's argument about Mr. McNair's testimony concerning trivial ideas is another mischaracterization. Sur-reply 12. Even if Petitioner's expert argued that adding a timer was a trivial idea, this does not mean that Petitioner believes Lamb discloses that idea. *Id.* (citing Ex. 2004, 96:18–19). Rather, the Petition unambiguously states, "The parent applications do not

disclose or reasonably suggest **any** subject matter related to timed alarms, measuring times, or starting countdown timers." Pet. 6 (citing Exs. 1004–1008).

On this point, we agree with Petitioner. Petitioner's redline comparison between the challenged patent and its parent[7] shows that the parts added in the challenged patent relate to the components that make the decisions about sending the timed alarm signal and initiating a timer. *See* Ex. 1008. For example, the challenged patent explains that the security panel must recognize the signal:

> The timed alarm signal may comprise a serial number of barrier alarm device 600 . . . . Of course, the timed alarm signal [and] the alarm signal could comprise other information, *so long as central security panel 116 can differentiate between two signals.*

Ex. 1001, 17:63–18:3 (emphasis added); Ex. 1008, 19. Patent Owner's expert also testified that central security panel 116 makes the relevant determination:

> Q So the human presence based upon the output of camera 128 is determined at [central security panel] 116?
>
> A The human presence detector sends a status signal to [central security panel] 116 indicating whether a human presence is detected or not. [Central security panel] 116 takes that input and through the process or code *makes a decision* of whether or not to initiate a time delay or initiate a predetermined delay or predetermined timeout or to send an immediate security -- sorry, to send a request for security response immediately.

Ex. 1012, 28:18–23 (emphasis added), *cited in* Pet. Suppl. Br. 4. Only the challenged patent contains parts about the central security panel's decisions

[7] The application that issued as the challenged patent is a continuation-in-part of Application No. 15/946,511, now U.S. Patent No. 10,497,230. Ex. 1001, code (60).

related to the timer. *See* Ex. 1008, 19–20. The subject matter related to the timed alarm signal appears only in challenged patent. *See, e.g.*, *id.* at 1–8, 15–31.

Thus, we disagree to the extent that Patent Owner contends that the signals in Lamb inherently disclose subject matter related to timed alarms, measuring times, or starting countdown timers. Sur-reply 9, 12. Nor do we see any evidence that Petitioner or its expert argued that this is a basis for the challenge. *See* Pet. 6; *see also* Reply 14–15; Ex. 2004, 96:7–19, 167:5–6, *cited in* Sur-reply 12.

*e. Remaining Limitations*

Apart from the arguments analyzed above, Patent Owner does not present separate arguments directed to the remaining limitations. *See* PO Resp.; Sur-reply.

Even so, Petitioner has the burden to show that the challenged claims are unpatentable. *See Dynamic Drinkware, LLC v. Nat'l Graphics, Inc.*, 800 F.3d 1375, 1378 (Fed. Cir. 2015). We agree with Petitioner that Lamb teaches the same two sensors, the same physical arrangement of those sensors, and the same sensor actuation as in claims 1 and 11. *See* Pet. 19–42 (claim chart for claim 1); *id.* at 53–55 (claim chart for claim 11). Indeed, the challenged patent was filed as a continuation-in-part of a divisional of Lamb. Ex. 1001, code (60). So the challenged patent shares with Lamb the same description of these features. *Compare* Ex. 1001, 8:4–26, Fig. 1, *with* Ex. 1009 ¶¶ 29–31, Fig. 1. Having reviewed Petitioner's arguments and evidence submitted in connection with the remaining limitations, we find them persuasive in showing that Lamb teaches or suggests those limitations. *See* Pet. 17–42, 53–55.

Thus, Petitioner has shown by a preponderance of the evidence that claims 1 and 11 are unpatentable.

*4. Claims 2 and 12*

*a. Immediate Alarm Signal Limitations*

Claim 2 recites, in part, "instructions that cause the barrier alarm device to transmit, via the transmitter, an *immediate* alarm signal." Ex. 1001, 29:55–57 (emphasis added). Similarly, claim 12 recites, in part, "transmitting by the barrier alarm device an *immediate* alarm signal." *Id.* at 30:64–65 (emphasis added).

Petitioner asserts that, when Lamb's processor 300 determines that a door is open and a person is not inside the monitored premises, an alarm signal is transmitted to central security panel 116. Pet. 42–43 (citing Ex. 1009 ¶¶ 37, 41, 51–53).

Under Patent Owner's construction, "the term 'immediate alarm signal' is a signal that itself indicates an alarm condition and instructs to immediately initiate a security response." PO Resp. 28–30; Sur-reply 16. Patent Owner argues that Petitioner does not explain how Lamb's alarm signal is an "immediate alarm signal," as recited in claims 2 and 12. Sur-reply 16.

The basis for Patent Owner's construction is the challenged patent's description of blocks 1024, 1114, and 1518 in the three different embodiments shown in Figures 10, 11A, and 15. PO Resp. 28 (citing Ex. 1001, 17:46–51, 19:58–61, 26:65–27:2); *see* Ex. 1001, 3:24–32, 3:48–53 (describing the flow diagrams in Figs. 10, 11A, and 15). The description of block 1024 (Figure 10) explains that the security panel responds to receiving the immediate alarm signal by immediately initiating a security response:

> At block 1024, central security panel 116 receives the immediate alarm signal via receiver 906 from barrier alarm device 600 and, in response, immediately initiates one or more security responses, as described above, i.e., within 5 seconds, or some other short time period on the order of seconds, of receipt of the immediate alarm signal.

Ex. 1001, 17:46–51, *cited in* PO Resp. 28. The description of block 1114 (Figure 11A) explains that the response's initiation should be immediate when the immediate alarm signal is received:

> At block 1114, the user may provide . . . an indication that one or more security responses should be initiated immediately by processor 900 in response to receipt of the immediate alarm signal.

*Id.* at 19:58–61, *cited in* PO Resp. 28. Lastly, the description of block 1518 (Figure 15) explains that the security response is contingent on when the signals are received:

> At block 1518, if processor 900 has not received the cancellation code before receiving the immediate alarm signal, processor 900 immediately initiates the one or more security responses, i.e., within 5 seconds or some other short time period on the order of seconds.

*Id.* at 26:65–27:2, *cited in* PO Resp. 28. That is, the immediate alarm signal's transmission may not always lead to a security response, for example, when the immediate alarm signal is received after the cancellation code. *Id.* at 26:65–27:2.

Claims 2 and 12 do not expressly recite a step of initiating the security response. Rather, only the transmission of the immediate alarm signal and its purpose—i.e., "for causing a security response to be initiated when . . ."—is claimed. *See id.* at 29:54–60 (claim 2); *id.* at 30:64–31:2 (claim 12). This view aligns with Patent Owner's construction because the construction focuses on what the signal instructs a receiver to do but does not expressly

cover what the receiver does. PO Resp. 28–30. Thus, Patent Owner's proposed construction (*id.* at 28–30; Sur-reply 16) is adequately supported by the claim language and the specification.

Also, Patent Owner argues that the time between the barrier's opening and the signal's transmission is not relevant or disclosed by the challenged patent. PO Resp. 30. ("[T]he specification contains no disclosure regarding how much time elapses between when the determination(s) that a barrier has been opened and/or that a person is (or is not) near the barrier are made and when a '[timed / first / immediate] alarm signal' is transmitted."). Rather, under Patent Owner's proposed construction, the immediate alarm signal is defined as an instruction. *See* Ex. 1001, 26:65–27:2. We adopt Patent Owner's proposed construction (PO Resp. 28–30; Sur-reply 16) here because it is adequately supported.

Even under that construction, Petitioner has sufficiently shown that Lamb teaches the "immediate alarm signal." Pet. 42–44. The part of Lamb cited by Petitioner describes how the security panel responds when it receives the alarm signal:

> At block 512, central security panel 116 receives the alarm signal from the barrier alarm device *and takes at least one action.* For example, central security panel 116 may cause a loud siren inside the premises to activate and/or send a remote alarm signal to a remote monitoring station so that the remote monitoring station may summon appropriate authorities to the premises. Remote server 400 may also provide a notification to interested parties that an alarm signal was received.

Ex. 1009 ¶ 53 (emphasis added), *cited in* Pet. 44; Inst. Dec. 33. Here, Lamb describes an alarm signal that, when received, immediately causes a security response, such as a activating a loud siren or summoning the authorities. Ex. 1009 ¶ 53.

A product in the prior art that at least sometimes "embodies a claimed method nonetheless teaches that aspect of the invention." *Hewlett-Packard Co. v. Mustek Sys., Inc.*, 340 F.3d 1314, 1326 (Fed. Cir. 2003). In at least the situation in which one action is taken in response to Lamb's alarm signal and that action is a security response (Ex. 1009 ¶ 53), we agree with Petitioner that the "alarm signal" in paragraph 53 is a signal that itself instructs the system to immediately initiate a security response. Pet. 44; *see* Inst. Dec. 33 (identifying this embodiment). For example, Lamb's system does not set a timer or wait for other input before initiating one of the described security responses. *See* Ex. 1009 ¶ 53. Thus, the signal's instruction must be to initiate an immediate security response. *See id.*

In sum, Petitioner has shown that the proposed combination teaches the immediate alarm signal limitations recited in claims 2 and 12, even under Patent Owner's construction. *See* Pet. 42–44 (citing Ex. 1009 ¶¶ 37, 41, 51–53).

*b. Remaining Limitations*

Apart from the arguments against this combination analyzed above, Patent Owner does not present separate arguments directed to the remaining limitations. *See* PO Resp.; Sur-reply. Even so, Petitioner has the burden to show that the challenged claims are unpatentable. *See Dynamic Drinkware*, 800 F.3d at 1378. We have reviewed Petitioner's arguments and evidence submitted in connection with the remaining limitations and find them persuasive. *See* Pet. 42–44 (claim 2); *id.* at 54–55 (claim 12). Thus, Petitioner has shown that claims 2 and 12 are unpatentable by a preponderance of the evidence.

### *5. Claims 6 and 16*

#### *a. First Alarm Signal Limitations*

Claim 6 recites, in part, "receive *a first alarm signal* from a barrier alarm device that monitors a barrier of a premises, *the first alarm signal* indicative of the barrier being opened." Ex. 1001, 30:13–15 (emphasis added). Claim 16 recites, in part, "receiving *a first alarm signal* from a barrier alarm device that monitors a barrier of a premises, *the first alarm signal* indicative of the barrier being opened." *Id.* at 31:16–18 (emphasis added). We refer to these limitations as the "First Alarm Signal Limitations."

We construe the "first alarm signal" in claims 6 and 16 as a signal in an alarm system that is indicative of the barrier being opened. *See supra* Section II.C.3.

Petitioner asserts that Lamb teaches receiving a first alarm signal indicative of the barrier being opened, as recited, because Lamb's barrier alarm device transmits the barrier-status signal to central security panel 116 when barrier-detection device 306 detects an open barrier. Pet. 47 (citing Ex. 1009 ¶ 43).

We agree. In fact, the cited part of Lamb expressly states that the barrier status signal indicates an opened barrier:

> If, however, the authorized person instead opens the barrier, barrier alarm device 106 transmits a barrier status signal to gateway 402, central security panel 116, or both, *indicative of the barrier being opened*.

Ex. 1009 ¶ 43 (emphasis added).

Patent Owner argues that Lamb's "barrier status signal" is not a "first alarm signal" because an alarm signal is different from a status signal. PO Resp. 35–36 (citing Ex. 1001, 11:33–12:3). In Patent Owner's view, Lamb expressly distinguishes a "barrier status signal" from an alarm signal. *Id.* at

36 (citing Ex. 1009 ¶ 43; Ex. 2003 ¶ 92; Ex. 2004, 110:19–111:13, 112:6–113:5, 126:1–6).

For the reasons discussed above in Section II.C.3, we disagree with Patent Owner's argument. *Id.* at 18–24, 35–36. Lamb's paragraph 43 does not expressly distinguish a *first* alarm signal, which is recited in the claim, from a barrier status signal. *See* Ex. 1009 ¶ 43. Nor does it expressly state that there cannot be multiple alarm signals. *See id.* Rather, Lamb uses the barrier status signal in the same way that claims 6 and 16 use the first alarm signal: to indicate an opened barrier. *Id.*

As discussed above in Section II.C.3, Patent Owner's arguments about alarm signals conflate various embodiments and types of alarm signals disclosed in Lamb and the challenged patent. *See* PO Resp. 35–36. For the same reason, we disagree with Patent Owner's characterization of Bruce McNair's testimony. *See* Ex. 2004, 110:19–111:13, 112:6–113:5, 126:1–6. As Bruce McNair testified, "Alarm signals have been given meanings that depend on their context." *Id.* at 117:6–7. As explained in detail in Section II.C.3, Patent Owner's arguments largely ignore the context in which the term "alarm signal" is used. PO Resp. 18–24, 35–36; *see also* Ex. 2004, 110:19–111:13, 112:6–113:5, 126:1–6 (questions based on the term "alarm signal"). Thus, we disagree with Patent Owner's arguments about the First Alarm Signal Limitations. *See id.* at 35–36.

We credit Bruce McNair's testimony about the first alarm signal (Ex. 1003 ¶¶ 107–109; Ex. 2004, 117:6–7) over James Parker's (Ex. 2003 ¶ 92) because Bruce McNair's testimony is better supported by the record discussed above (*see* Ex. 1009 ¶ 43, Ex. 1001, 11:33–12:3).

Because we agree that Lamb's barrier status signal is a signal in an alarm system that is indicative of the barrier being opened, Petitioner has

shown that Lamb teaches or suggests the First Alarm Signal Limitations. *See* Pet. 47.

*b. Countdown Timer*

Claim 6 recites, in part, "begin a measuring of an elapsed time from when the first alarm signal was received . . . determine whether the elapsed time has exceeded a predetermined time." Ex. 1001, 30:19–24. Claim 16 recites, in part, "starting a countdown timer . . . determining whether the countdown timer has expired." *Id.* at 32:1–4.

Petitioner argues that the Lamb-Williams combination teaches these limitations in claims 6 and 16. Pet. 48–50 (claim 6); *id.* at 55–56 (claim 16). According to Petitioner, Williams discloses a countdown timer initialized upon an opened door or detected motion. *Id.* at 49 (citing Ex. 1010, 1:64–2:8; 2:11–18; 3:19–38; 3:56–4:3; 4:12–27; 5:3–5; Abst.; claims 1, 5, 8; Ex. 1003 ¶¶ 112, 114). Petitioner argues that Williams discloses a signal that initiates a timer and that it would have been obvious to incorporate this feature in Lamb. *See id.* at 28–30; *supra* Sections II.D.3.a (the timed alarm signal limitations of claim 1), II.D.3.c (the rationale to combine Williams and Lamb). Petitioner argues, to the extent that the claims require measuring the time from the first alarm signal's receipt, i.e., the time from detecting an opened barrier instead of the time from detecting a person, it would have been obvious to do so. Pet. 49–50.

*i. Measuring Time*

Patent Owner argues that Williams does not determine that an elapsed time has exceed a predetermined time. PO Resp. 37–38 (citing Ex. 2003 ¶ 99). In Patent Owner's view, the elapsed time measured by Williams's countdown timer will always be less than or equal to a predetermined time. *Id.* at 38–39 (citing Ex. 2003 ¶¶ 99–100; Ex. 1010,

3:64–4:3). According to Patent Owner, a countdown timer stops measuring elapsed time upon timing out at zero. *Id.* at 38.

Claim 6, though, does not specify how the elapsed time is measured or how it is deemed to have exceeded the predetermined time. Ex. 1001, 30:19–20. Rather, claim 6 merely recites that the central security panel "determine[s] whether the elapsed time has exceeded a predetermined time." *Id.* at 30:19–24. As best understood, Patent Owner's argument assumes that the measured time is somehow continuously compared to a predetermined value. PO Resp. 38–39. Patent Owner provides no support in the specification for this view (*id.* at 38–39) and regards the specification's silence on this issue to be "irrelevant" (Sur-reply 15).

Petitioner sufficiently supports its argument that the elapsed time can be measured using a countdown timer. *See* Pet. 48–50 (claim 6); *id.* at 55–56 (claim 16). It is irrelevant whether Williams is counting up or down. Either way, the timer measures an elapsed time. Nor is it relevant that the timer counts beyond one. That is, claim 6 does not recite that a timer must count past a predetermined time. *See* Ex. 1001, 30:19–24. As pointed out by Petitioner, "a timer counting to ten seconds triggers a response only *after* 10 seconds have elapsed, expired, or been exceeded." Reply 16. Thus, we disagree with Patent Owner's argument about measuring time. PO Resp. 38–39; Sur-reply 15–16.

For similar reasons, we credit Bruce McNair's testimony on this issue (Ex. 1003 ¶¶ 110–119) over James Parker's (Ex. 2003 ¶¶ 99–100).

*ii. Different Scope*

Patent Owner argues that "there is [] a presumption that two independent claims have different scope when different words or phrases are used in those claims." PO Resp. 39 (alteration in original) (quoting

*Seachange Int'l, Inc. v. C-COR Inc.*, 413 F.3d 1361, 1369 (Fed. Cir. 2005)). According to Patent Owner, claims 6 and 16 are different because "Claim 6 recites 'begin a measuring of an elapsed time' and 'determin[ing] whether the elapsed time has exceeded a predetermined time,' while Claim 16 recites 'starting a countdown timer' and 'determining whether the countdown timer has expired.'" *Id.* (alteration by Patent Owner). Patent Owner argues that the analysis in the Petition is deficient because "Petitioner failed to provide independent analyses for these claims and limitations" and it relied on the same countdown timer without "any explanation or analysis as to how Williams discloses determining that an elapsed time has exceeded a predetermined time, as the claim requires." *Id.* at 39–40.

Even if claims 6 and 16 have different scope because they use different words or phrases, claims 6 and 16 do not need to have mutually exclusive scope. Here, claim 16 recites one way that claim 6's determination can be made. That is, claim 6 recites "measuring of an elapsed time from when the first alarm signal was received," but does not expressly recite how. Ex. 1001, 30:19–20. Claim 16 expressly requires a countdown timer for measuring time. *Id.* at 32:1. For the reasons discussed above in Section II.D.5.b.i, Petitioner has sufficiently shown that Williams's countdown timer measures an elapsed time from the first alarm signal's receipt, or it would have been obvious to do so. Pet. 48–50.

*iii. Conclusion*

Thus, Petitioner has shown that the Lamb-Williams combination teaches or suggests the limitations relating to elapsed time in claim 6 and the timer in claim 16. *See* Pet. 28–30.

*c. Obviousness Rationale*

Patent Owner argues that Petitioner has not shown that it would have been obvious to modify Lamb with Williams to arrive at the claimed invention. PO Resp. 41–60; Sur-reply 16–22. We disagree for the reasons discussed with respect to claims 1 and 11. *See* Section II.D.3.c. Our analysis for claims 1 and 11 applies here because the relevant parts of Petitioner's obviousness rationale for claims 6 and 16 is similar to the rationale for claims 1 and 11 (Pet. 17–56), and Patent Owner argues claims 6 and 16 together with claims 1 and 11 (PO Resp. 41–60; Sur-reply 16–22).

*d. Remaining Limitations*

Apart from the arguments analyzed above, Patent Owner does not present separate arguments directed to the remaining limitations. *See* PO Resp.; Sur-reply. Even so, Petitioner has the burden to show that the challenged claims are unpatentable. *See Dynamic Drinkware*, 800 F.3d at 1378. Thus, we have reviewed Petitioner's arguments and evidence submitted in connection with the remaining limitations and find them to be persuasive. *See* Pet. 44–53 (claim 6); *id* at 55–56 (claim 16).

Thus, Petitioner has shown by a preponderance of the evidence that claims 6 and 16 are unpatentable.

*E. Obviousness: Sharma*

Petitioner asserts that claims 1 and 11 are unpatentable as obvious over Sharma. Pet. 57–79.

*1. Sharma*

Sharma automatically disarms a security system to prevent false alarms. Ex. 1011, 1:7–9. Specifically, the system uses its "Armed Stay Mode" to distinguish between unwanted people entering the building and people leaving the building. *Id*. at 7:26–37. In Armed Stay Mode, motion

detected inside an open door does not trigger an alarm. *Id*. at 7:47–66. Sharma also uses a "Timed Exit Mode" to allow people to leave without interacting with the system. *Id.* at 8:19–21. In Timed Exit Mode, the processor ignores a door-control signal or disables a door contact for some time before resetting the system to Armed Stay Mode. *Id.* at 8:14–21.

*2. Claims 1 and 11*

*a. Timed Alarm Signal Limitations*

Claim 1 recites, in part, "a transmitter for transmitting a *timed alarm signal* to a receiver associated with a security panel," and instructions that cause the device to "transmit, via the transmitter, the *timed alarm signal* to the receiver." Ex. 1001, 29:35–36, 29:50–51 (emphasis added). Similarly, claim 11 recites, in part, "transmitting by the barrier alarm device a *timed alarm signal* to the central security panel." *Id.* at 30:58–59 (emphasis added). We refer to these as the "Timed Alarm Signal Limitations."

Petitioner explains that Sharma's processor 175 transmits signals to system control panel 102 to enter Timed Exit Mode. Pet. 67. The transmitted signals are timed alarm signals because the signals initiate a 30-second timer, according to the Petition. *See id*.

Sharma's Figure 2, with Petitioner's annotations, is reproduced below. Pet. 69.

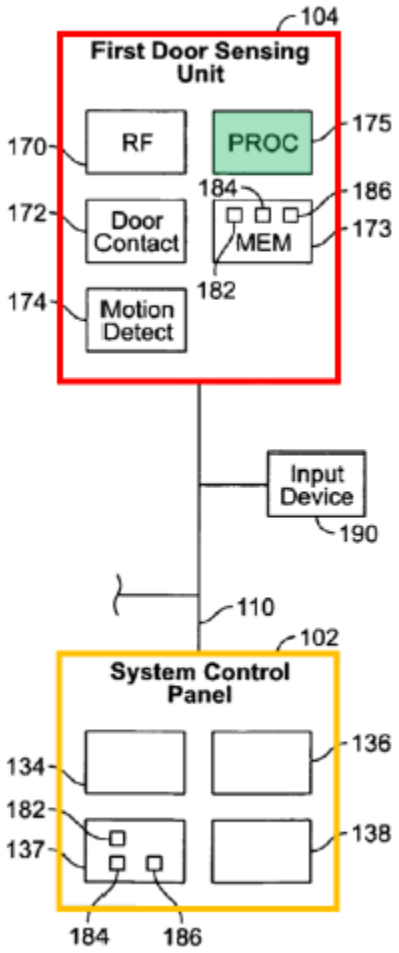


FIG. 2

Annotated Figure 2 shows door sensing unit 104 connected to system control panel 102 over network 110. *Id.*

Petitioner has persuasively shown that the first door sensing unit 104 communicates signals to system control panel 102 to enter Timed Exit Mode. *See id.* at 67–68. Sharma's system 100, not pictured in Figure 2 above, includes control panel 102. Ex. 1011, 2:60–61, Fig. 1. System control panel 102 resets the system and activates devices, among other things. *Id.* at 3:45–48; *id.* at 7:38–42. Processor 175 in the door-sensing unit 104 transmits signals to control panel 102. *Id.* at 7:61–64; *id.* at 8:6–11, *cited in*

Pet. 67–68. Petitioner explains that those signals cause the system to enter Timed Exit Mode. Pet. 67–68 (citing Ex. 1011, 8:6–13). Sharma explains that Timed Exit Mode is one of the three alternative modes described in connection with the signal sent at step 266. *See* Ex. 1011, 8:6–13. Thus, Petitioner has shown that processor 175 in door-sensing unit 104 transmits signals to system control panel 102, to arm, disarm, and set system 100's mode, including Timed Exit Mode. *See* Pet. 67–68 (citing Ex. 1011, 1:64–67; *id.* at 7:61–64; *id.* at 8:6–11).

Patent Owner argues that Sharma's signal to enter Timed Exit Mode is not a timed alarm signal because it causes a Sharma's system to be disarmed or bypassed. PO Resp. 60–61; Sur-reply 22–23. In Patent Owner's view, disarming or bypassing is similar to the bypass signal in the '340 patent. *Id.* at 61 (citing Ex. 2003 ¶ 172; Ex. 1011, 8:6–21). According to Patent Owner, the '340 patent distinguishes a bypass signal that disarms the system from the claimed timed alarm signal. *Id.* at 60–61; Sur-reply 22–23. Patent Owner argues that Petitioner's expert confirmed that the alarm signal is different than a bypass signal. *Id.* at 61 (Ex. 2004, 117:18–21, 126:12–15).

Patent Owner's argument depends, at least in part, on its construction. *Id.* (citing § IV(A)(3) of its Response discussing bypass signals). We disagree with Patent Owner's claim-construction arguments. *See supra* Section II.C.1. As for bypass signals specifically, Patent Owner's argument (PO Resp. 18–24, 60–61) is contradicted by challenged patent's specification and has no basis in the plain language of the claim. *See supra* Sections II.C.1 (discussing the construction of the "timed alarm signal"), II.C.3.b (discussing the embodiments covering the "first alarm signal"). Thus, we disagree with Patent Owner on this issue (PO Resp. 18–24, 60–61). For similar reasons and because it is better supported by the record

discussed above (*see, e.g.*, Ex. 1011, 1:64–67, 7:61–64, 8:6–11), we credit Bruce McNair's testimony (Ex. 1003 ¶¶ 180–183) over James Parker's on this issue (Ex. 2003 ¶¶ 58–67, 171–172).

We determine that "timed alarm signal" means a signal in an alarm system for initiating a timer associated with the security panel. *See supra* Section II.C.1. Petitioner sufficiently explains that Sharma's signal is a timed alarm signal because, as discussed above, Sharma's system generates a signal to enter Timed Exit Mode in response to detecting an open door and motion (steps 254 and 256), which initiates a 30-second timer. Pet. 67–68. Nothing further is required.[8] *See supra* Section II.C.1. For the reasons discussed in Section II.C.1 *supra*, we disagree with Patent Owner's arguments to the extent that they incorporate additional unrecited limitations about bypass signals that are inconsistent with the Board's construction. PO Resp. 60–61.

For the same reasons, we disagree with Patent Owner's characterization of Bruce McNair's testimony. *See* Ex. 2004, 117:18–21; *id.* at 126:12–15, *cited in* PO Resp. 61. As Bruce McNair testified, "Alarm signals have been given meanings that depend on their context." Ex. 2004, 117:6–7. As explained in detail in Section II.C.3, Patent Owner's arguments largely ignore the context in which the term alarm signal is used. PO Resp. 60–61.

Thus, Petitioner sufficiently shows that Sharma teaches or suggests the Timed Alarm Signal Limitations.

---

[8] For example, we need not reach Patent Owner's argument about activating an alarm (*see* Sur-reply 23–24) because Petitioner has sufficiently explained how Sharma teaches or suggests the Timed Alarm Signal Limitations under the Board's Construction (*see* Pet. 67–68).

*b. Remaining Limitations*

Apart from the arguments against this combination analyzed above, Patent Owner does not present separate arguments directed to the remaining limitations of claims 1 and 11. *See* PO Resp.; Sur-reply. Even so, Petitioner has the burden to show that the challenged claims are unpatentable. *See Dynamic Drinkware*, 800 F.3d at 1378. We have reviewed Petitioner's arguments and evidence submitted in connection with the remaining limitations and find them persuasive. *See* Pet. 59–79.

Thus, Petitioner has shown by a preponderance of the evidence that claims 1 and 11 are unpatentable over Sharma.

## III. CONCLUSION

Petitioner has met its burden to show that claims 1, 2, 6, 11, 12, and 16 are unpatentable.[9]

| Claim(s) | 35 U.S.C. § | Reference(s)/ Basis | Claims Shown Unpatentable | Claims Not Shown Unpatentable |
|---|---|---|---|---|
| 1, 2, 6, 11, 12, 16 | 103 | Lamb, Williams | 1, 2, 6, 11, 12, 16 | |
| 1, 11 | 103 | Sharma | 1, 11 | |
| **Overall Outcome** | | | 1, 2, 6, 11, 12, 16 | |

[9] Should Patent Owner wish to pursue amendment of the challenged claims in a reissue or reexamination proceeding subsequent to the issuance of this decision, we draw Patent Owner's attention to the April 2019 Notice Regarding Options for Amendments by Patent Owner Through Reissue or Reexamination During a Pending AIA Trial Proceeding. *See* 84 Fed. Reg. 16,654 (Apr. 22, 2019). If Patent Owner chooses to file a reissue application or a request for reexamination of the challenged patent, we remind Patent Owner of its continuing obligation to notify the Board of any such related matters in updated mandatory notices. *See* 37 C.F.R. §§ 42.8(a)(3), (b)(2).

## IV. ORDER

It is

ORDERED that Petitioner has proven by a preponderance of the evidence that claims 1, 2, 6, 11, 12, and 16 of the ’340 patent are unpatentable; and

FURTHER ORDERED that, because this is a Final Written Decision, parties to the proceeding seeking judicial review of the decision must comply with the notice and service requirements of 37 C.F.R. § 90.2.

FOR PETITIONER:

Scott A. McKeown
WOLF, GREENFIELD & SACKS, P.C.
SMcKeown-PTAB@WolfGreenfield.com

Matthew J. Rizzolo
Brendan F. McLaughlin
Victor Cheung
ROPES & GRAY LLP
matthew.rizzolo@ropesgray.com
brendan.mclaughlin@ropesgray.com
victor.cheung@ropesgray.com

FOR PATENT OWNER:

James J. Lukas, Jr.
Gary Jarosik
Benjamin Gilford
Olivia Mathews
GREENBERG TRAURIG, LLP
lukasj@gtlaw.com
jarosik@gtlaw.com
gilfordb@gtlaw.com
olivia.mathews@gtlaw.com