UNITED STATES PATENT AND TRADEMARK OFFICE

BEFORE THE PATENT TRIAL AND APPEAL BOARD

VOLKSWAGEN GROUP OF AMERICA, INC.,
Petitioner

v.

NEO WIRELESS LLC,
Patent Owner

Case IPR2023-00086
U.S. Patent No. 10,833,908

DECLARATION OF LEONARD J. CIMINI, JR., PH.D.

Mail Stop "PATENT BOARD"
Patent Trial and Appeal Board
U.S. Patent & Trademark Office
P.O. Box 1450
Alexandria, VA 22313-1450

TABLE OF CONTENTS

I. Introduction 1

II. Grounds of Unpatentability 3

III. Qualifications 4

IV. Materials Considered 8

V. Legal Understanding 10

A. My Understanding of Claim Construction 10

B. My Understanding of Obviousness 10

C. My Understanding of a Person Having Ordinary Skill in the Art 13

VI. The ’908 Patent 14

A. Overview 14

B. Prosecution History 16

C. IPR2022-00277 17

D. Level of Ordinary Skill in the Art 19

E. Claim Construction 20

VII. Background of the Technology 22

A. Multiple Access Techniques 22

B. Orthogonal Frequency-Division Multiplexing (OFDM) 25

C. Guard Bands and Guard Periods 25

D. Random Access Channel and Protocol 26

E. Standard Mobile Station Components 28

VIII. Ground 1: Claims 1, 4, 6-11, 14, 16-21, 24, and 26-30 would have been obvious over Kaiser, Gibson, and Frank 30

A. Kaiser 30

B. Gibson 34

C. Frank 36

D. Motivation to Combine 38

1. Kaiser with Gibson 38

2. Kaiser and Gibson with Frank 40

E. Independent Claim 1 46

1. Claim 1's Preamble 47

2. Limitation 1.1 47

3. Limitation 1.2 48

4. Limitation 1.3 55

5. Limitation 1.4 61

F. Independent Claim 11 63

G. Independent Claim 21 65

1. Claim 21's Preamble 66

2. Limitation 21.1 67

3. Limitation 21.2 69

4. Limitation 21.3 71

5. Limitation 21.4 73

6. Limitation 21.5 75

7. Limitation 21.6 76

8. Limitation 21.7 76

9. Limitation 21.8 77

10. Limitation 21.9 78

H. Dependent Claims 4, 14, and 24.....79

I. Dependent Claims 6, 16, and 26.....82

J. Dependent Claims 7, 17, and 27.....83

K. Dependent Claims 8, 18, and 28.....91

L. Dependent Claims 9, 19, and 29.....92

M. Dependent Claims 10, 20, and 30.....94

IX. Ground 2: Claims 2-3, 5, 12-13, 15, 22-23, and 25 would have been obvious over Kaiser, Gibson, Frank, and Kanterakis. 97

A. Kanterakis.....97

B. Motivation to Combine 99

C. Dependent Claims 2, 12, and 22.....102

D. Dependent Claims 3, 13, and 23.....105

E. Dependent Claims 5, 15, and 25.....106

X. CONCLUSION 109

I, Leonard J. Cimini, Jr., declare as follows:

I. Introduction

1. I have been retained by Sterne, Kessler, Goldstein & Fox P.L.L.C. on behalf of Volkswagen Group of America ("VWGoA" and/or "Petitioner") for the above-captioned *inter partes* review proceeding. I understand that this proceeding involves U.S. Patent No. 10,833,908 (EX1001, "the '908 patent"), which is titled "Channel Probing Signal For A Broadband Communication System," and that the '908 patent is currently assigned to Neo Wireless LLC ("Patent Owner").

2. I have been retained as a technical expert by VWGoA to study and provide my opinions on the technology claimed in, and the patentability or unpatentability of, claims 1-30 of the '908 patent ("the challenged claims"). This declaration is directed to the challenged claims of the '908 patent, and sets forth the opinions I have formed, the conclusions I have reached, and the bases for each. For purposes of this declaration, I was not asked to provide any opinions that are not expressed herein.

3. I am familiar with the technology described in the '908 patent as of its earliest possible priority date of January 29, 2004. I have been asked to provide my technical review, analysis, insights, and opinions regarding the '908 patent. I have used this experience and insight along with the references identified herein as the

basis for my opinions that support the grounds of unpatentability set forth in the Petition for *Inter Partes* Review of the ’908 patent.

4. I have reviewed and am familiar with the specification of the ’908 patent, which issued on November 10, 2020. I understand that the ’908 patent has been provided as EX1001. I will cite to the specification using the following formats: EX1001, ’908 patent, 1:1-10 (long form) and EX1001, 1:1-10 (short form). These example citations both point to the ’908 patent specification at column 1, lines 1-10.

5. I am being compensated by VWGoA at my standard hourly rate for the time I spend in connection with this proceeding. My compensation is not dependent in any way on the substance of my opinions or on the outcome of this proceeding.

II. Grounds of Unpatentability

6. In forming my opinions about the ’908 patent, I have considered the following grounds of unpatentability. Based on my review of the prior art references that form the basis of these grounds, it is my opinion that claims 1-30 of the ’908 patent would have been obvious to a person of ordinary skill in the art (“POSA”) as of January 29, 2004. I have not formed an opinion as to whether the claims of the ’908 patent are entitled to the January 29, 2004 priority date, but I reserve the right to do so in the future, if necessary. For the purposes of my opinions and analysis herein, I have been asked to treat January 29, 2004, as the time of the invention of the challenged claims.

Ground	Basis	Claims	References
1.	§ 103	1, 4, 6-11, 14, 16-21, 24, and 26-30	Kaiser, Gibson, and Frank
2.	§ 103	2, 3, 5, 12, 13, 15, 22, 23, and 25	Kaiser, Gibson, Frank, and Kanterakis

7. I have been asked to consider how a POSA would have understood the challenged claims in light of the disclosures of the ’908 patent. I also have been asked to consider how a POSA would have understood the prior art references Kaiser, Gibson, Frank, and Kanterakis. Further, I have been asked to consider and provide my technical review, analysis, insights, and opinions regarding whether a POSA would have understood that the combinations of the prior art references listed in the table above render obvious claims 1-30 of the ’908 patent.

III. Qualifications

8. In formulating my opinions, I have relied upon my training, knowledge, and experience in the relevant art. I have over 40 years of academic and industry experience in wireless technologies and standards, various communications technologies, networking, orthogonal frequency-division multiplexing (OFDM), and physical and media access control (MAC) layer technology. Over my career, among other activities, I have worked with companies (including Fortune 500 companies) to enable the high-date-rate wireless communication systems and networks that we have today. I have published over 70 journal articles and over 120 conference papers. I also am a named inventor on 29 patents.

9. My academic background in electrical engineering provides a technical foundation for work in transmission of data in telecommunication systems. I received a Bachelor of Science degree in Electrical Engineering from the University of Pennsylvania in 1978. A year later, I received a Master of Science degree in Electrical Engineering from the University of Pennsylvania. In 1982, I received the Doctor of Philosophy (Ph.D.) degree in Electrical Engineering, also from the University of Pennsylvania.

10. After receiving my Ph.D. in 1982, I began working for AT&T Bell Laboratories, in West Long Branch, as a Member of Technical Staff. I continued to

work at this branch of AT&T Bell Laboratories until 1985. In my role as a Member of Technical Staff, I proposed and analyzed speech privacy techniques for cellular mobile radio systems. I further designed and demonstrated 10- and 18-GHz hardware for a personal communication system. I also proposed and analyzed the use of OFDM in mobile radio systems. My proposal at that time was the first application of OFDM to wireless systems. This has become the basis for much of the current, widespread use of OFDM today.

11. After that, I continued to work as a Member of Technical Staff at AT&T Bell Laboratories, but at a different branch. I held this position from 1985 to 1996. During this time, I invented and analyzed new algorithms for dynamic channel selection in wireless communication systems, among other things. I also proposed and analyzed the use of multicarrier techniques to overcome the limitations to high-bit-rate wireless transmission caused by multipath. Further, I invented, analyzed, designed, and built a 20-Mbps packet-based wireless modem using clustered OFDM. During this phase of my career, I also devised techniques for providing reliable transmission for both light-wave (*i.e.*, fiber), and wireless communication systems.

12. From 1996 to 2002, I was a Technology Consultant (the next level on the AT&T employee technology ladder) for AT&T Laboratories Research. During this time, I studied the effect of channel mismatch on adaptive modulation for

OFDM for wireless applications. I also invented and analyzed techniques for robust channel estimation and peak power reduction in OFDM. Further, I invented and analyzed solutions to both the physical layer and MAC layer challenges for providing high-bit-rate packet data to wide-area cellular users, using OFDM.

13. Since 2002, I have been a Professor at the University of Delaware. I teach undergraduate courses in linear systems, probability, and communications. I also teach graduate courses in digital and wireless communications, and I research topics such as OFDM and multiuser networks.

14. I have authored or co-authored more than 190 scientific and industry publications relating to various communications technologies, networking, and OFDM. I have also presented numerous tutorials and short courses to industry and academic audiences on these topics. I am listed as an inventor on over 20 patents that relate to these topics.

15. Since receiving my Ph.D. in 1982, I was awarded nine of the industry's most prestigious honors and awards. These awards include the 2010 Innovator's Award from the New Jersey Inventors Hall of Fame for innovative research related to high-speed wireless communications. I also received the 2007 James Evans Avante-Garde Award from the IEEE Vehicular Technology Society in recognition of my pioneering contributions to high-data-rate wireless communications, and the Stephen O. Rice Prize in the Field of Communications

Theory for a 2009 paper in the IEEE Transactions on Communications. In 2010, I won the IEEE Communications Society's Wireless Communications Technical Committee Recognition Award for having a high degree of visibility and contribution in the field of Wireless and Mobile Communications Theory, Systems, and Networks. In 2000, I became a Fellow of the IEEE for my contributions to the theory of high-speed wireless communications. More recently, I have received a number of other awards, including the Career Technical Achievement Award from the Communication Theory Committee of the IEEE Communications Society for contributions to OFDM for wireless communication.

16. A copy of my *curriculum vitae* is provided as EX1004, which contains further details on my experience, technical expertise, and other qualifications.

IV. Materials Considered

17. In formulating my opinions, I have relied upon my training, knowledge, and experience that are relevant to the ’908 patent. Furthermore, I have considered specifically the following documents listed below in addition to any other documents cited in this declaration:

Exhibit No.	***Description***
1001	U.S. Patent No. 10,833,908 B2 to Li et al.
1002	Prosecution History of U.S. Patent No. 10,833,908 B2
1004	*Curriculum Vitae* of Leonard J. Cimini, Jr., Ph.D.
1007	S. Kaiser and K. Fazel, “A flexible spread-spectrum multi-carrier multiple-access system for multi-media applications,” Proceedings of 8th International Symposium on Personal, Indoor and Mobile Radio Communications - PIMRC ‘97, 1997, pp. 100-104 vol.1, doi: 10.1109/PIMRC.1997.624371 (“Kaiser”)
1008	Jerry D. Gibson, “The Mobile Communications Handbook,” 2nd Edition, CRC Press LLC, 1999 (“Gibson”)
1009	WO 99/60729 to Frank et al. (“Frank”)
1010	U.S. Patent No. 6,574,267 to Kanterakis et al. (“Kanterakis”)
1019	Alan Gatherer and Edgar Auslander, “The Application of Programmable DSPs in Mobile Communications,” John Wiley & Sons, Ltd., 2002.
1020	*Dell Inc. v. Neo Wireless LLC*, IPR2022-00277, Paper 10 (PTAB June 21, 2022).

Exhibit No.	*Description*
1021	Joint Claim Construction Statement, Neo Wireless, LLC v. Dell Technologies Inc. et al., Case No. 6:21-cv-00024-ADA (W.D. Tex.), filed December 21, 2021 (ECF No. 56)
1022	F. Tobagi, "Multiaccess Protocols in Packet Communication Systems," in IEEE Transactions on Communications, vol. 28, no. 4, pp. 468-488, April 1980, doi: 10.1109/TCOM.1980.1094698.

18. To the best of my knowledge, the above-mentioned documents and materials are true and accurate copies of what they purport to be. An expert in the field would reasonably rely on them to formulate opinions such as those set forth in this declaration.

19. I have also relied upon various legal principles (as explained to me by VWGoA's counsel) in formulating my opinions. My understanding of these principles is summarized below.

V. Legal Understanding

A. My Understanding of Claim Construction

20. I understand that during an *inter partes* review proceeding, claims are to be construed in light of the specification as would be read by a person of ordinary skill in the relevant art at the time the application was filed. I understand that claim terms are given their ordinary and customary meaning as would be understood by a person of ordinary skill in the relevant art in the context of the entire disclosure. A claim term, however, will not receive its ordinary meaning if the patentee acted as his own lexicographer and clearly set forth a definition of the claim term in the specification. In this case, the claim term will receive the definition set forth in the patent.

B. My Understanding of Obviousness

21. I understand that a patent claim is invalid if the claimed invention would have been obvious to a person of ordinary skill in the art at the time the application was filed. I understand that this means that even if all of the requirements of the claim cannot be found in a single prior art reference that would anticipate the claim, the claim can still be invalid.

22. To obtain a patent, a claimed invention must have been, as of its priority date, nonobvious in view of the prior art in the field. I understand that a patent claim is obvious when the differences between the subject matter sought to

be patented and the prior art are such that the subject matter as a whole would have been obvious at the time the invention was made to a person having ordinary skill in the art.

23. I understand that to prove that prior art or a combination of prior art renders a patent obvious, it is necessary to: (1) identify the particular references that, singly or in combination, render the patent obvious; (2) specifically identify which elements of the patent claim appear in each of the asserted references; and (3) explain how the prior art references could have been combined in order to create the inventions claimed in the asserted claim.

24. I also understand that prior art references can be combined under several different circumstances. For example, it is my understanding that one such circumstance is when a proposed combination of prior art references results in a system that represents a predictable variation, which is achieved using prior art elements according to their established functions.

25. I also understand that when considering the obviousness of a patent claim, one should consider whether a teaching, suggestion, or motivation to combine the references exists so as to avoid impermissibly applying hindsight when considering the prior art. I understand this test should not be rigidly applied, but that the test can be important to avoiding such hindsight.

26. I understand that certain objective indicia can be important evidence

as to whether a patent is obvious or nonobvious. Such indicia include: (1) commercial success of products covered by the patent claims; (2) a long-felt need for the invention; (3) failed attempts by others to make the invention; (4) copying of the invention by others in the field; (5) unexpected results achieved by the invention as compared to the closest prior art; (6) praise of the invention by the infringer or others in the field; (7) the taking of licenses under the patent by others; (8) expressions of surprise by experts and those skilled in the art at the making of the invention; and (9) the patentee proceeded contrary to the accepted wisdom of the prior art. At this point, I am not aware of any secondary indicia of non-obviousness. But I reserve the right to review and opine on any evidence of objective indicia of nonobvious that may be presented during this proceeding.

27. I also understand that "obviousness" is a legal conclusion based on the underlying factual issues of the scope and content of the prior art, the differences between the claimed invention and the prior art, the level of ordinary skill in the pertinent art, and any objective indicia of non-obviousness. For that reason, I am not rendering a legal opinion on the ultimate legal question of obviousness. Rather, my testimony addresses the underlying facts and factual analysis that would support a legal conclusion of obviousness or non-obviousness, and when I use the term obvious, I am referring to the perspective of one of ordinary skill at the time of invention.

C. My Understanding of a Person Having Ordinary Skill in the Art

28. I understand that a person of ordinary skill in the relevant art (herein "POSA") is presumed to be aware of all pertinent art, thinks along conventional wisdom in the art, and is a person of ordinary creativity—not an automaton.

29. I have been asked to consider the level of ordinary skill in the field that someone would have had at the time the claimed invention was made. In deciding the level of ordinary skill, I considered the following:

- the levels of education and experience of persons working in the field;
- the types of problems encountered in the field; and
- the sophistication of the technology.

30. My opinion below explains how a POSA would have understood the technology described in the references I have identified herein around the January 29, 2004 timeframe.

31. Regardless if I use "I" or a "POSA" during my technical analysis below, all of my statements and opinions are always to be understood to be based on how a POSA would have understood or read a document at the time of the invention.

VI. The ’908 Patent

A. Overview

32. The ’908 patent is titled “Channel Probing Signal for a Broadband Communication System.” EX1001, (54). The specification describes a wireless communication system that uses technologies that were well-known by January 2004; in particular, the specification describes using (1) direct sequence spread spectrum (“DSSS”) and (2) multi-carrier (such as ODFM) technologies. EX1001, Abstract, 1:32-58, 2:42-64. The specification acknowledges that DSSS and OFDM were known and used by January 2004. EX1001, 1:32-58. For example, it correctly states that DSSS had “been widely used in some existing wireless networks,” and, in the Background section, further describes known benefits and drawbacks of DSSS and OFDM. EX1001, 1:32-58.

33. The specification describes a system in which “a spread spectrum signal is intentionally overlapped with an OFDM signal, in a time domain, a frequency domain, or both.” EX1001, Abstract. The ’908 patent explains that “[t]he OFDM signal . . . is used for carrying broadband data or control information,” and the “spread spectrum signal . . . is used for facilitating system functions such as initial random access . . . .” EX1001, Abstract. The ’908 patent further explains that the spread spectrum signal may be a direct sequence spread spectrum signal, or DSSS. *See* EX1001, 2:42-53.

34. The specification further describes an embodiment in which a mobile station, seeking access to a particular base station, engages in an exchange with the base station that was common in systems by January 2004. In particular, the specification explains that the base station broadcasts "a certain signature code or sequence that is designated to the … base station." EX1001, 8:49-55. Upon receipt of the broadcast, the mobile station "sends an initial random access signal over the DSSS channel with [the] certain signature code or sequence that is designated to the corresponding base station." EX1001, 8:49-55. The specification further explains that "[a] sufficient guard period is reserved in the DSSS signal to account for initial time alignment uncertainty." EX1001, 8:60-62. Next, "[i]f the base station successfully detects the DSSS signal, it sends the acknowledgement (ACK) carrying information such as a signature or other unique mobile station identifier and power and time adjustments of the mobile on the downlink control channel in the next available timeslot." EX1001, 8:63-67. "The mobile station whose transmission signature matches that of the acknowledgement then moves to the designated uplink MC control channel using the assigned time and power values and further completes the message transmission." EX1001, 8:67-9:4. As I discuss below in Section VII.D (in which I describe certain background technology related to random access channels and protocols) and Section VIII.B (in which I describe

certain sections of the Gibson reference), such exchanges were common by January 2004 for mobiles stations seeking initial access to a base station.

35. I note that, although the specification describes overlaying the OFDM and the spread-spectrum signals, none of the claims recite overlaying an OFDM signal and a spread-spectrum signal. I additionally note that, although independent claims 1, 11, and 21 recite "*a random access signal*," only dependent claims 8, 18, and 28 recite that "*the random access signal is a spread spectrum signal*." In any event, as discussed in detail below, the combination of Kaiser, Gibson, and Frank render obvious independent claims 1, 11, and 21, and dependent claims 8, 18, and 28.

B. Prosecution History

36. Based on my review of the prosecution history, I note that the U.S. Patent and Trademark Office ("USPTO") issued only one office action on the merits, which included rejections for failing to comply with the written description requirement of 35 U.S.C. § 112, but did not include prior art-based rejections. EX1002, 0140-44. The applicant amended the claims seeking to address the rejections, and the examiner subsequently issued a Notice of Allowance but did not provide any additional explanation as to why the claims were allowable. EX1002, 0173-92.

C. IPR2022-00277

37. I understand that, in IPR2022-00277, Dell Inc. and Dell Technologies Inc. (collectively, "Dell") filed a petition for *inter partes* review that challenged the validity of claims 1-6, 8-16, 18-26, and 28-30 of the '908 patent. EX1020, 2. Dell's petition presented the following obviousness grounds based on prior art references that are not used in the obviousness grounds that I present below:

Claims Challenged	35 U.S.C. §	References
1–6, 8–16, 18–26, 28–30	103(a)[1]	Ma,[2] TR[3]
10, 20, 30	103(a)	Ma, TR, Jung[4]
1–6, 8–16, 18–26, 28–30	102(e)/103(a)	Walton[5]
10, 20, 30	103(a)	Walton, Jung

[2] US Pub. No. 2004/0001429 A1, published Jan. 1, 2004 (Ex. 1005).
[3] *Universal Mobile Telecommunications System (UMTS); UMTS Terrestrial Radio Access (UTRA); Concept evaluation (UMTS 30.06 version 3.0.0)*, TR 101 146 V3.0.0, European Telecommunications Standards Institute (December 1997) (Ex. 1006).
[4] US Pub. No. 2004/0114504 A1, published June 17, 2004 (Ex. 1010).
[5] US Pub. No. 2004/0082356 A1, published Apr. 29, 2004 (Ex. 1013, "Walton").

EX1020, 6-7.

38. I understand that the Board denied Dell's petition and did not institute review of the '908 patent based on the invalidity grounds presented in Dell's petition. Regarding Dell's obviousness grounds based on the Ma reference (the first two grounds in the chart above), the Board's decision turned on the following

element of claim 1: "*transmit, to the base station, a random access signal followed by a guard period in only a portion of the frequency band*."[1] EX1020, 18. Dell had argued that: (1) Ma teaches a random access signal; (2) the TR reference teaches a random access signal followed by a guard period; and (3) that it would have been obvious "to modify Ma's random access signal to include an additional guard interval." EX1020, 18. The Board, however, did not find Dell's proposed reasons for modifying Ma to include TR's guard period to be persuasive. EX1020, 22-26. By contrast, the obviousness ground based on the combination of Kaiser, Gibson, and Frank that I present below does not suffer from this deficiency. Specifically, as discussed in detail below, Frank teaches "*a random access signal followed by a guard period*," without requiring modification. *See* Section VIII.E.4 (addressing Limitation 1.3).

39. Regarding Dell's obviousness grounds based on the Walton reference (the third and fourth grounds in the chart above), the Board's decision turned on the following element of claim 1: "*wherein the random access signal includes a sequence associated with the base station*."[2] EX1020, 29. Dell had argued that Walton teaches this element because, in Walton, the random access signal included

[1] This element is part of Limitation 1.3 that I address in Section VIII.E.4.

[2] This element is part of Limitation 1.3 that I address in Section VIII.E.4.

"the user terminal's assigned MAC ID," which Dell mapped to the claimed "*sequence associated with the base station*." EX1020, 29-30. The Board, however, determined that Walton's "MAC ID identifies a specific user terminal," and that Dell had failed to "sufficiently explain how the assignment of the MAC ID by the access point means that the MAC ID is 'a sequence associated with the base station' when Walton teaches that the MAC ID functions to identify a user terminal, not an access point." EX1020, 32. Again, the obviousness ground based on the combination of Kaiser, Gibson, and Frank that I present below does not suffer from this deficiency. Specifically, as discussed in detail below, Frank discloses a "base station-unique spreading code," EX1009, 8:31-9:9, which is a "*sequence associated with the base station*." *See* Section VIII.E.4 (addressing Limitation 1.3).

D. Level of Ordinary Skill in the Art

40. In my opinion, a person of ordinary skill in the art of the '908 patent as of January 29, 2004, would have a B.S. degree in electrical engineering, computer engineering, or computer science, or an equivalent field, as well as at least 3-5 years of academic or industry experience in mobile wireless communications, or comparable industry experience. A greater amount of education, e.g., a doctorate in electrical engineering, computer engineering, computer science, or an equivalent field would also qualify as a POSA for the '908

patent in lieu of a B.S. degree. Experience could take the place of some formal training, as domain knowledge may be learned on the job. This description is approximate, and a higher level of education or skill might make up for less experience and vice versa.

41. I am well-qualified to determine the level of ordinary skill in the art. I am very familiar with the technology of the ’908 patent before and during the January 2004 timeframe. As mentioned above, by 2004, I had obtained both a Masters and a Ph.D. in Electrical Engineering from the University of Pennsylvania. By 2004, I had also acquired extensive experience relating to wireless communication systems, including 20 years of experience working at AT&T Bell Laboratories and AT&T Laboratories Research. I more than qualify as a POSA of the ’908 patent.

E. Claim Construction

42. I have been instructed that the challenged claims of the ’908 patent are to be given their ordinary and customary meaning as understood by one of ordinary skill in the art at the time of the invention in light of the specification and the prosecution history pertaining to the patent. Based on my review of the challenged claims, it is my opinion that none of the claim terms require explicit constructions. Accordingly, all claim terms should receive their plain and ordinary meaning, in

the context of the ’908 patent specification, which I understand is sometimes referred to as the *Phillips* standard.

43. I understand that in a previous litigation, Neo Wireless provided certain positions regarding some of the claim terms of the ’908 patent. EX1021, 0004, 0010. In particular, Neo Wireless argued that the preambles of independent claims 1, 11, and 21 are limiting. EX1021, 0010. In general, I do not dispute these positions. The grounds of unpatentability discussed below render the claims obvious even under the constructions provided by Neo Wireless.

VII. Background of the Technology

44. I understand that analyzing the state of wireless or mobile communications during the years prior to the earliest possible priority date of January 29, 2004, can provide valuable insight into what POSAs were aware of at the time, and in what direction the industry was taking. Accordingly, I discuss below some of the wireless communications concepts and technologies that would have been known to a POSA in the January 2004 timeframe and that are relevant to the ’908 patent.

45. In my opinion, by January 2004, all of the technology at issue in the ’908 patent was broadly applied and well-known by a POSA working in the wireless or mobile communications industry. No individual elements of the ’908 claims were new or novel by January 29, 2004, and, as I demonstrate below, there was nothing new or novel about the way in which those elements were combined in the claims of the ’908 patent. Further, there were no technological barriers to combining these elements to form the claimed invention. Indeed, combining these elements would have yielded predictable results.

A. Multiple Access Techniques

46. Multiple access techniques—including frequency-division multiple access (FDMA), time-division multiple access (TDMA), and code-division

multiple access (CDMA)—were well-known in cellular communication systems by 2004. *See* EX1008, 0312-24. Gibson explains:

> There are three basic multiple access methods. Time division multiple access, frequency division multiple access, and spread spectrum multiple access (SSMA). SSMA comes in two versions; frequency-hopping SSMA and discrete-sequence SSMA. The latter is usually referred to as CDMA. There are also many hybrids of these systems.

EX1008, 0435; *see also* EX1008, 0320 ("[B]ecause of their wideband nature CDMA systems are often called spread-spectrum systems.").

47. In FDMA systems, "[s]imultaneous access to the radio channel is facilitated by assigning nonoverlapping frequency bands to different users." EX1008, 0323. TDMA "[s]ystems assign nonoverlapping time slots to different users in a round-robin fashion." EX1008, 0324. CDMA "[s]ystems use signals with very small cross-correlations to facilitate sharing of the broadcast radio channel. Correlators are used to extract the desired user's signal while simultaneously suppressing interfering, parallel transmissions." EX1008, 0323.

48. Figure 17.1 of Gibson, below, illustrates FDMA, TDMA, and CDMA.

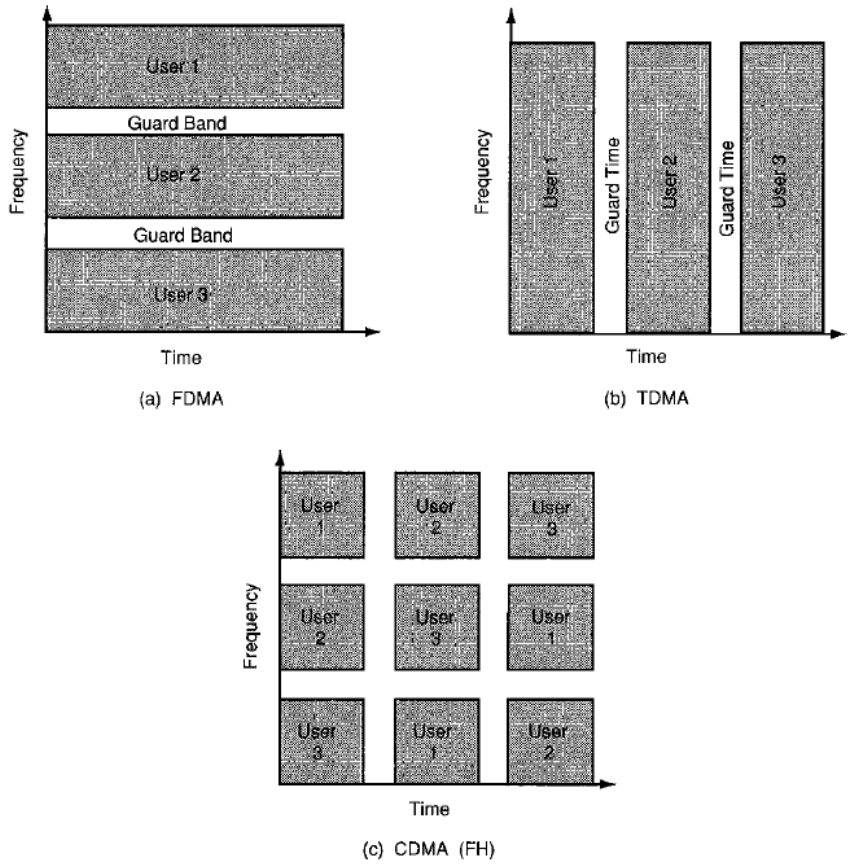

FIGURE 17.1 Multiple-access methods for wireless communication systems.

EX1008, 0314, FIG. 17.1.

49. By January 2004, FDMA, TDMA, and CDMA had been used in combination for multiple access. *See, e.g.*, EX1008, 0313 ("System designers have to decide in favor of one, or a combination, of the latter three domains to facilitate multiple access."), 0435 ("There are also many hybrids of these systems."). By January 2004, mobile devices that supported different standards and technologies, including different multiple-access techniques, were also well-known. *See* EX1019, 0045 ("In telecommunications, a 'multi-mode' mobile is one that can support many different telecommunications standards with different radio access

technologies."), 0050 ("A dual-mode system is the combination of a GSM mobile [6] and a UMTS mobile.").

B. Orthogonal Frequency-Division Multiplexing (OFDM)

50. OFDM is generally regarded as a modulation technique. EX1008, 0308 ("Orthogonal frequency division multiplexing (OFDM) is a modulation technique" that "transmit[s] blocks of symbols in parallel employing a (large) number of orthogonal subcarriers."). On the other hand, OFDM may also be considered a multiple access technique when employed in wireless communication systems where users share the OFDM frequency sub-carriers or sub-channels (such as in Kaiser's system, which I discuss below).

C. Guard Bands and Guard Periods

51. Inserting guard bands between frequency bands and guard periods between transmissions were well-known techniques used to reduce signal interference in cellular communication systems by 2004. For example, systems using FDMA routinely employed "guard bands between frequency bands to reduce adjacent channel interference, i.e., inference from signals transmitted in adjacent frequency bands; see also Fig. 17.l(a)." EX1008, 0315. Similarly, systems using TDMA routinely employed "[g]uard times" or periods between timeslots. EX1008, 0318. Figures 17.1(a) and (b) of Gibson, above, illustrate guard bands in FDMA and guard times/periods in TDMA, respectively. In fact, I note that each of Kaiser,

Gibson, and Frank discloses using guard periods. *See, e.g.*, EX1007, Kaiser, 0003 (explaining that "[e]ach ODFM-frame may start with a null symbol (without signal energy)" and referring to "guard-time Δ"), 0004 ("guard time of about 20 μs"); EX1008, 0318; EX1009, 6:6-10 ("A guard interval is preferably inserted in the preamble portion of the frame ….").

D. Random Access Channel and Protocol

52. Random access channels and protocols were well-known technologies for dynamic channel (or subcarrier) assignment by 2004. *See* EX1008, 0319-20, 0324. A random access channel was often "a separate uplink channel on which mobiles [could] notify the base station of their need for a traffic channel." EX1008, 0319. This channel was "shared by all users in range of the base station," and thus "a random access protocol, like the ALOHA protocol, ha[d] to be employed to resolve possible collisions." EX1008, 0319.

53. The ALOHA protocol was a well-known multiple-access protocol in which the device seeking access, such as a mobile station in a cellular communication system seeking access to a base station, transmits an access request without trying to determine whether the transmission channel is busy. If the channel is not busy the base station may successfully receive and act upon the request. On the other hand, if the channel is busy (for example, if two mobile stations request access at the same time) a collision may occur and the access

request will be discarded. If there is a collision, the sending mobile station waits a random amount of time and then re-transmits the request. This simple protocol was often called "pure ALOHA." *See* EX1022, 0004 ("The simplest of its kind, pure ALOHA permits a user to transmit any time it desires. If they do so, and within some appropriate time-out period it receives an acknowledgment from the destination (the central computer), then it knows that no conflict occurred. Otherwise it assumes that a collision occurred and it must retransmit. To avoid continuously repeated conflicts, the retransmission delay is randomized across the transmitting devices, thus spreading the retry packets over time.").

54. By January 2004, there were also well-known variations of the ALOHA protocol, such as slotted ALOHA. *See* EX1022, 0004. In slotted ALOHA, the transmission channel is divided into a number of time slots, and mobile stations can transmit at the beginning of a time slot. Collisions may still occur but are often reduced by adding the constraint that the mobile stations transmit at the beginning of a time slot (as opposed to at any time in pure ALOHA). I note that Gibson mentions slotted ALOHA in passing, *see, e.g.*, EX1008, 0484, 0598, and that Frank describes and seeks to improve upon slotted ALOHA variations, *see, e.g.*, EX1009, 2:9-7:11.

E. Standard Mobile Station Components

55. The claims of the ’908 patent recite components of a mobile station that were well-known and conventional in mobile stations by January 2004, including transmitters, receivers, digital-to-analog converters, and analog-to-digital converters. These components were basic and fundamental to a mobile station’s ability to operate in a cellular network. For example, the figure below shows a high-level functional block diagram of a GSM phone in the 2002 timeframe. EX1019, 0004, 0037.

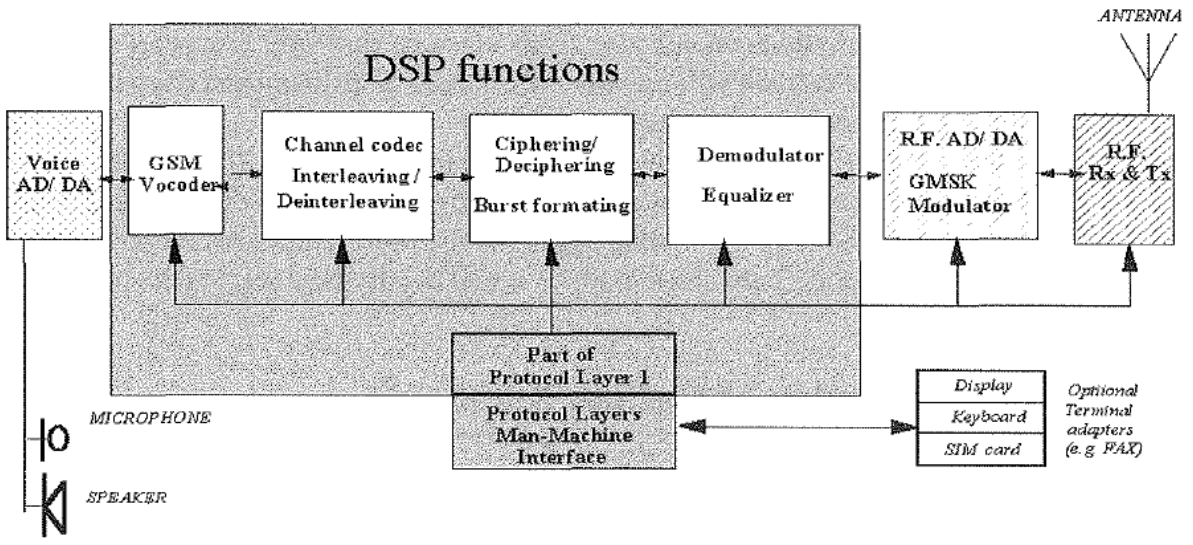

Figure 2.2 Functional block diagram of a GSM phone

EX1019, 0037, FIG. 2.2.

56. As shown above on the left hand-side by the microphone and speaker, the phone includes an analog-to-digital converter (“AD”) to convert analog voice signals from the microphone into digital signals for processing by the digital signal

processor (“DSP”), and a digital-to-analog converter to perform the opposite conversion and output an analog signal to the speaker. On the right-hand side by the antenna, the phone includes receive and transmit circuitry (“Rx & Tx”). The phone also includes an analog-to-digital converter (“AD”) to convert analog RF signals received by the phone into digital signals, and a digital-to-analog converter (“DA”) to convert digital signals output from the DSP into analog RF signals for transmission by the transmitter. EX1019, 0037.

VIII. Ground 1: Claims 1, 4, 6-11, 14, 16-21, 24, and 26-30 would have been obvious over Kaiser, Gibson, and Frank

57. In my opinion, the combination of Kaiser, Gibson, and Frank teaches, suggests, or renders obvious each and every element of claims 1, 4, 6-11, 14, 16-21, 24, and 26-30 of the ’908 patent, and a POSA would have been motivated to combine the references and had a reasonable expectation of success in doing so.

A. Kaiser

58. Kaiser discloses a “system” and “multiple access scheme designed for mobile multi-media applications” that “is referred to as spread-spectrum multi-carrier multiple-access (SS-MC-MA) and exploits the advantages given by the combination of the spread-spectrum technique with multi-carrier modulation.” EX1007, 0001, Abstract. Kaiser explains that the system is “a good candidate for the future universal mobile telecommunications systems (UMTS),” which, in the 1997 timeframe, was a forthcoming “third-generation mobile radio communications system[].” EX1007, 0001, Abstract.

59. Like the ’908 patent, Kaiser’s SS-MC-MA system and method employ multi-carrier (MC) modulation and spread-spectrum techniques in the uplink (from mobile station to base station) in a cellular communications system. *Compare, e.g.*, EX1007, 0001 (“The multiple access scheme is based on a combination of the spread-spectrum technique and orthogonal multi-carrier modulation.”), *with* EX1001, 2:41-45 (“A broadband wireless communication

system where both the Multi-Carrier (MC) and direct Sequence Spread Spectrum (DSSS) signals are intentionally overlaid together in both time and frequency domains is described."); *see also* EX1007, 0001 (the "SS-MC-MA scheme is investigated for the up-link of a mobile radio system"), 0003 (describing "adjacent cells operating in the same frequency band," i.e., a cellular system). A POSA would have understood that Kaiser discloses DSSS techniques. As Gibson explains, "Spectrum spreading can be achieved mainly in two ways: through frequency hopping as explained earlier or through direct sequence spreading." EX1008, 0321. Kaiser's technique does not describe or rely on frequency hopping, but rather multiples the data symbols "with an orthogonal spreading code," such as the "Walsh-Hadamard code." EX1007, 0002. POSAs would have understood and associated such multiplication using Walsh-Hadamard as describing DSSS.

60. Kaiser explains that "the SS-MC-MA separates the users' signals according to an FDMA scheme on [the] sub-carrier level," which advantageously "avoids multiple access interference (MAI) within a cell." EX1007, 0001, Abstract; *see id*. (explaining the "SS-MC-MA scheme … avoids MAI due to an FDMA scheme on [the] sub-carrier level by nevertheless exploiting the diversity gain offered by the spread-spectrum technique"). Kaiser's "SS-MC-MA assigns each user exclusively its own sub-carriers according to an FDMA scheme,"

EX1007, 0001, which, like the ’908 patent, is based on OFDM, EX1007, 0002-04, FIGs. 1, 2, 4; *see* EX1001, claim 1.

61. Figure 2 of Kaiser, below, shows an example of user-specific OFDM frequency mapping and de-mapping. EX1007, 0002. “Each user of a cell transmits on a sub-set of sub-carriers, where the sub-sets of sub-carriers of the users within a cell are disjunct.” EX1007, 0002. Figure 2 of Kaiser, for example, shows the sub-carrier (or sub-channel) assignment for users 1, 2, and Nu.

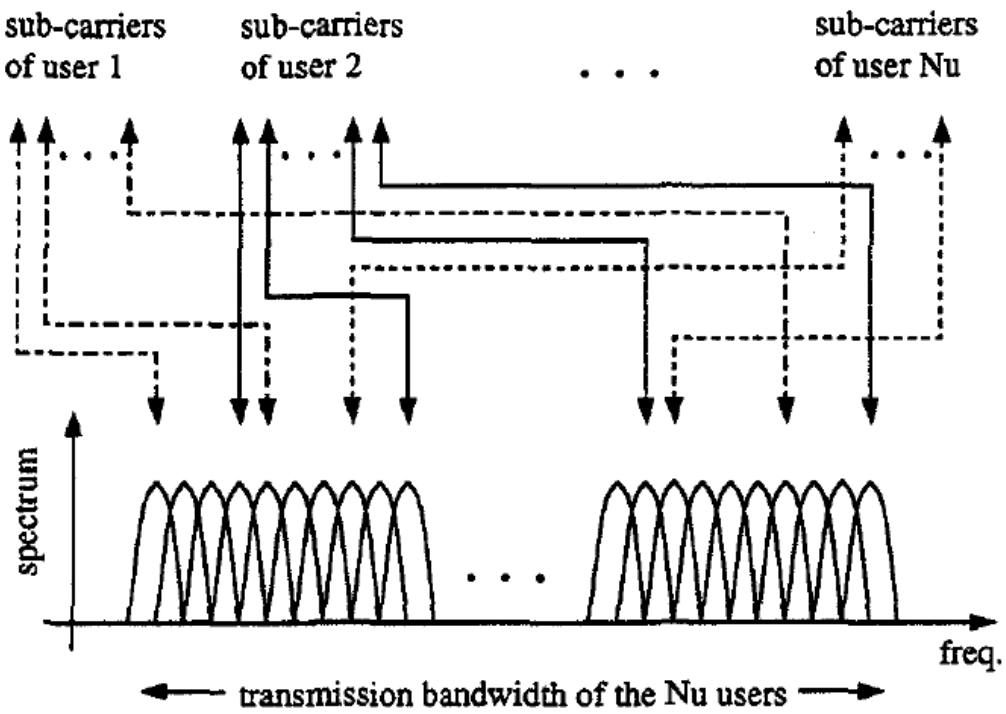

Figure 2: Pseudo-random user-specific frequency-mapping and -demapping.

EX1007, 0002, FIG. 2.

62. Figure 4 of Kaiser, below, shows a single OFDM frame having "256 sub-channels" (on the frequency axis) and "31 OFDM-symbols" (on the time axis). EX1007, 0004.

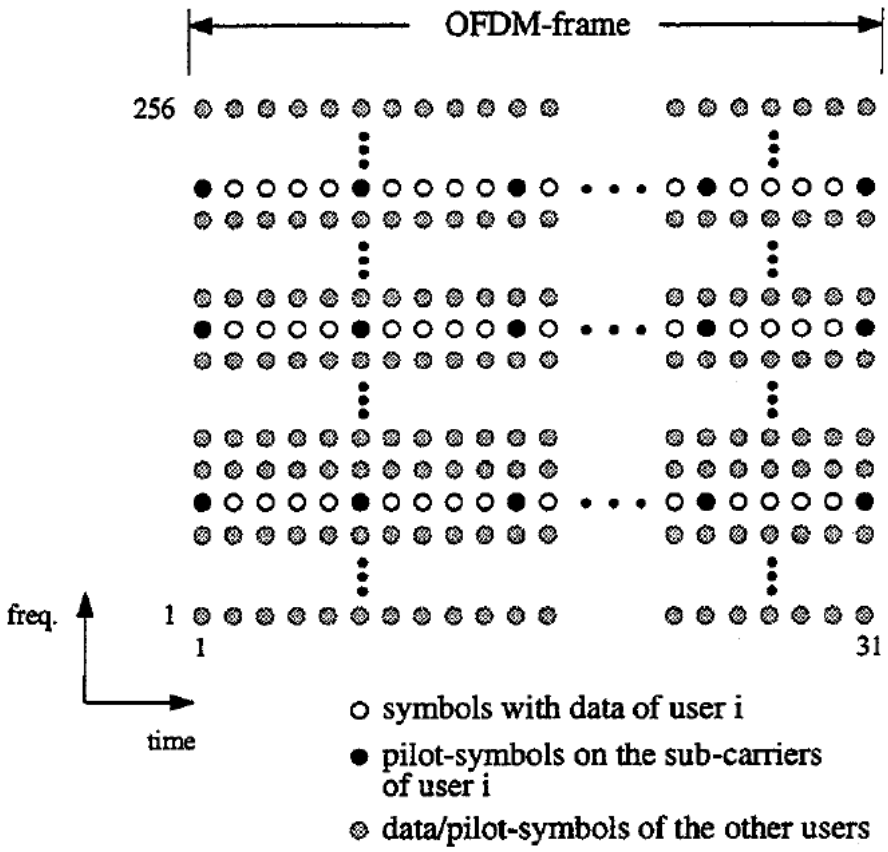

Figure 4: OFDM frame with 256 sub-carriers and 31 OFDM-symbols.

EX1007, 0004, FIG. 4.

63. Kaiser describes an example implementation in which each OFDM frame can support "32 users." EX1007, 0004. Kaiser further discloses that the SS-MC-MA system can have "a TDMA component, where, in a cycle of 4 [OFDM] frames … each frame transmits the data of another group of 32 users" such that, in

this implementation, Kaiser's system can support up to "128 active users" (32 users per frame x four OFDM frames). EX1007, 0004.

64. Kaiser recognized that the "wide range of multi-media services" supported in 3G systems required "different data rates." EX1007, 0003. "For instance, the transmission of low data rate services will need … only one or few sub-carriers," whereas "for the transmission of high data rate [services] … the majority or all of the sub-carriers should be used." EX1007, 0003. Kaiser thus discloses that a "base station … allocates an appropriate set of sub-carriers" based on the "required data rate" of the desired multi-media service. EX1007, 0003.

65. Kaiser, however, does not describe the details of the sub-carrier (or sub-channel) assignment, which would have led a POSA to Gibson.

B. Gibson

66. Gibson is a comprehensive treatise on mobile communications that was published in 1999 and is titled *The Mobile Communications Handbook*. Gibson explains that the treatise "covers the entire field—from principles of analog and digital communications to cordless telephones, wireless local area networks (LANs), and international technology standards." EX1008, 0003 (back cover).

67. Gibson discloses initial channel (or sub-carrier) assignment. EX1008, 0319. Specifically, Gibson teaches that "[i]n both FDMA and TDMA systems, channels should not be assigned to a mobile on a permanent basis" because such

"[a] fixed assignment strategy would either be extremely wasteful of precious bandwidth or highly susceptible to cochannel interference." EX1008, 0319. "Instead, channels must be assigned on demand." EX1008, 0319. Gibson thus discloses using "a separate uplink channel on which mobiles can notify the base station of their need for a traffic channel. This uplink channel is referred to as the **random-access channel** because of the type of strategy used to regulate access to it." EX1008, 0319.

68. Gibson discloses that because the random-access channel "is shared by all users in range of the base station, a random access protocol, like the ALOHA protocol, has to be employed to resolve possible collisions." EX1008, 0319. Gibson explains, "A random access protocol is employed to arbitrate access to this channel." EX1008, 0324.

69. Gibson further discloses a "procedure" for call establishment, illustrated in Figure 17.3 of Gibson (below). First, as Gibson explains, "[t]he mobile initiates the procedure by transmitting a request on the random-access channel." EX1008, 0319. Second, "[o]nce the base station has received the mobile's request, it responds with an immediate assignment message that directs the mobile to tune to a dedicated control channel for the ensuing call setup." EX1008, 0319. Finally, "[u]pon completion of the call setup negotiation, a traffic channel, i.e., a frequency in FDMA systems or a time slot in TDMA systems, is

assigned by the base station and all future communication takes place on that channel." EX1008, 0319.

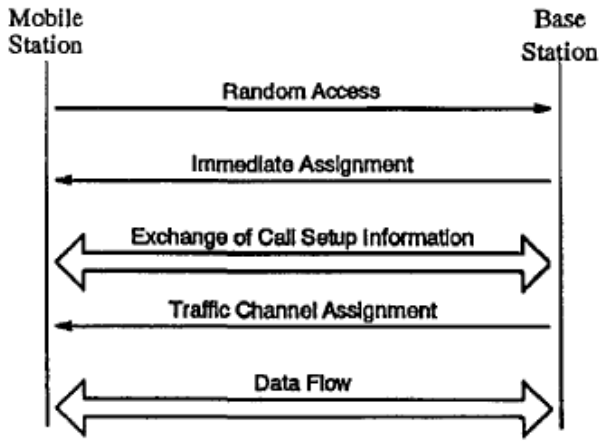

FIGURE 17.3 Mobile-originating call establishment.

EX1008, 0320, FIG. 17.3.

70. Other than passing mention of the "ALOHA protocol," Gibson does not expressly describe the details of the random access protocol, which would have led a POSA to Frank.

C. Frank

71. Like Kaiser, Frank is directed to "next generation mobile communications systems, such as … Universal Mobile Telecommunications Systems (UMTS)." EX1009, 1:12-15; *compare id.*, *with* EX1007, 0001, Abstract. Frank recognized that because of the "broad selection of telecommunications services" such systems would offer, "the number of calls being made is expected to increase significantly, which will result in much higher traffic density on random access channels (RACHs)" and "in increased collisions and access failures."

EX1009, 1:18-23. Frank further recognized that these "systems will have to use much faster and flexible random access procedures, in order to increase their access success rates and reduce their access request processing times." EX1009, 1:23-26. Frank explains that "there will be a high demand for much faster and more efficient access in those systems due to the expected substantial increase in packet-switched traffic." EX1009, 1:26-28.

72. To meet this demand, Frank describes a random-access technique that sought to improve upon then-existing approaches, such as ALOHA-type approaches. *See* EX1009, 2:9-5:31. Frank's technique uses a random-access "frame structure … with a separate preamble and data portion." EX1009, 8:14-16. "The preamble is used by the based station to detect that a [mobile station (MS)] is attempting the random access request." EX1009, 8:16-17. Frank discloses that "[a] guard interval is preferably inserted between the preamble and data portion of the frame, which enables detection of the preamble before the data arrives (requiring less buffering)." EX1009, 8:19-22.

73. In Frank's system, a base station broadcasts "a known base station-unique spreading code … via the base station's broadcast channel," EX1009, 9:6-9, and "can be continuously 'listening' for [a mobile station's] transmitted preamble," EX1009, 8:29-30. Frank discloses that "[i]n order to distinguish between simultaneous random access requests being transmitted by different MSs,

each preamble of a random access request is modulated by a unique signature pattern," which "is spread with [the] known base station-unique spreading code." EX1009, 8:31-9:9. "[D]uring the guard time interval, T_G, the signature detection processing can be performed at the base station receiver … and the base station can determine more quickly whether a random access request has been made." EX1009, 9:24-27.

D. Motivation to Combine

1. Kaiser with Gibson

74. It would have been obvious to a POSA to combine Gibson's teachings related to channel assignment with Kaiser's system. For example, it would have been obvious to (i) include a "random-access channel" as "a separate uplink channel" and (ii) perform the channel-assignment "procedure," as disclosed by Gibson, in Kaiser's system. EX1008, 0319-20, FIG. 17.3. Doing so would have predictably resulted in a combined Kaiser-Gibson system in which: (i) the uplink includes Kaiser's dedicated sub-channels and Gibson's separate, shared random-access channel, and (ii) the system uses Gibson's procedure shown in Figure 17.3 to assign channels (Kaiser's sub-channels or sub-carriers).

75. Gibson provides express teachings that would have motivated a POSA to make this combination. Again, Kaiser discloses using both FDMA and TDMA, EX1007, 0003-04, and that "the base station … allocates an appropriate set of sub-

carriers" to each active user, EX1007, 0003. But Kaiser does not expressly describe the details of sub-channel (sub-carrier) assignment. This is not surprising because Kaiser's paper focuses primarily on the details of Kaiser's proposed spread-spectrum multi-carrier multiple-access (SS-MC-MA) scheme. That said, any POSA would have readily understood and found obvious that some mechanism for performing channel assignment is needed in Kaiser's system in order for a mobile station to request and be allocated a set of sub-carriers. That would have led a POSA to Gibson, who expressly teaches that "[i]n both FDMA and TDMA systems … channels must be assigned on demand" because "[a] fixed assignment strategy would be either extremely wasteful of precious bandwidth or highly susceptible to cochannel interference." EX1008, 0319. Gibson thus teaches employing a "random-access channel" as "a separate uplink channel on which mobiles can notify the base station of their need for a traffic channel." EX1009, 0319. Gibson also teaches that Figure 17.3 outlines a "successful procedure" showing the exchange between a mobile station seeking channel assignment and a base station performing channel assignment that uses the random-access channel. EX1009, 0319-20, FIG. 17.3.

76. Gibson's express teachings would have motivated a POSA to include a random-access channel as a separate uplink channel in Kaiser in order for Kaiser's system to assign subcarriers according to the FDMA and TDMA schemes

disclosed by Kaiser. A POSA would have been further motivated by Gibson's teaching that Figure 17.3 outlines a "successful procedure" for channel assignment to use Gibson's procedure in Kaiser's system to assign subcarriers. Indeed, the channel-assignment procedure that Gibson describes was routine and conventional by January 2004.

77. A POSA would have had a reasonable expectation of success in making this combination because Gibson's techniques were well-known and commonly implemented in existing cellular systems by 2004. A POSA thus would have reasonably expected that combining Gibson's known and familiar techniques in Kaiser's system would result in successful carrier assignment.

78. Accordingly, the Kaiser-Gibson combination is nothing more than the combination of well-known, prior-art elements (e.g., Kaiser's FDMA and TDMA access methods and Gibson's random-access channel and channel-assignment procedure) according to their established functions, yielding predictable results (e.g., channel/carrier assignment in a system employing FDMA and/or TDMA).

2. Kaiser and Gibson with Frank

79. It would have been obvious to a POSA to combine Frank's random-access techniques with the combined Kaiser-Gibson system. For example, it would have been obvious to employ Frank's teachings related to the preamble and guard period in the Kaiser-Gibson system during the channel-assignment procedure.

Doing so would have predictably resulted in a combined Kaiser-Gibson-Frank system in which: (i) the uplink includes Kaiser's dedicated sub-channels and Gibson's separate, shared random-access channel, (ii) Frank's random-access preamble is transmitted in the separate, shared random-access channel, and (iii) the system uses Gibson's procedure shown in Figure 17.3 to assign channels (Kaiser's sub-channels or sub-carriers).

80. The references' express teachings and suggestions, as well as the design incentives and market forces driving the development of the next generation (3G) systems by January 2004, would have motivated a POSA to make this combination.

81. Kaiser suggests using its system in 3G networks, such as UMTS, EX1007, 0001, and each of Kaiser, Gibson, and Frank teaches that a key objective of 3G networks was to support and contend with increased user traffic (among other constraints and objectives), *see, e.g.*, EX1007, 0001 ("user capacity"), EX1008, 0523 ("higher call capacities"), EX1009, 1:18-28 ("expected to increase significantly"). For example, Frank explains that, for 3G systems, "the number of calls being made is expected to increase significantly, which will result in much higher traffic density on random access channels (RACHs)." EX1009, 1:20-22. Gibson teaches that because the random-access "channel is shared by all users in range of the base station, a random access protocol, like the ALOHA protocol, has

to be employed to resolve possible collisions," EX1008, 0319, but Gibson does not expressly describe the details of such random-access protocols.

82. The design incentives and market forces, including the expected significant increase in user traffic, that were driving 3G system development, as well as Gibson's teaching that "a random access protocol … has to be employed to resolve possible collisions," would have motivated a POSA to seek random-access techniques designed for 3G systems, leading to Frank. And because Frank teaches random-access techniques designed to address the "much higher traffic density on random access channels (RACHs)" resulting in "increased collisions and access failures" in 3G systems, such as UMTS, *see* EX1009, 1:12-28, a POSA would have been motivated to combine Frank's techniques in the Kaiser-Gibson system.

83. Frank's express teachings would have further motivated the combination and provide independent bases to support combining Frank with Kaiser and Gibson. Frank teaches that its random-access technique, particularly using the preamble and guard period, confers numerous important technical advantages, such as "that each portion of the random access request has to fulfill only one function and can thus be optimally designed for that respective task," EX1009, 6:14-16; "that all necessary post-processing, such as for example, signature decoding, can be accomplished during the guard period," which simplifies "the hardware design for random access request detection" and

minimizes "the random access request processing delay," EX1009, 6:20-24; "less buffering" as a result of the guard period, EX1009, 6:7-10, 8:19-22; "reduc[ing] the MS's transmitted power," EX1009, 9:19-23; that the "random access request can be aligned exactly to that of an existing system's frame slot scheme," EX1009, 9:19-23; and "the base station can determine more quickly whether a random access request has been made," EX1009, 9:24-27. These benefits would have motivated a POSA to use Frank's teachings related to the preamble (random-access signal) and guard period in the Kaiser-Gibson system. Indeed, in my opinion, each of these benefits would have independently motivated a POSA to combine Frank's random-access techniques in the Kaiser-Gibson system.

84. A POSA would have had a reasonable expectation of success in making this combination. That Frank discloses its random-access techniques in the context of a CDMA system, EX1009, 1:6-9, would not have discouraged a POSA from making the combination. First, it was well-known by January 2004 for systems to employ a combination of known multiple-access techniques, such as FDMA, TDMA, and CDMA. *See, e.g.*, EX1008, 0313 ("System designers have to decide in favor of one, or a combination, of the latter three domains to facilitate multiple access."), 435 ("There are also many hybrids of these systems."). Indeed, Kaiser's system employs all three: FDMA, TDMA, and DSSS (which was also commonly called CDMA), EX1007, 0001, 0003-04; EX1008, 0320, 0435,

confirming that using CDMA with FDMA and/or TDMA was common and within the skill of a POSA.

85. It was also well-known by January 2004 for a single mobile station to support the multiple-access technologies used in the combined Kaiser-Gibson-Frank system. *See* EX1019, 0045 ("In telecommunications, a 'multi-mode' mobile is one that can support many different telecommunications standards with different radio access technologies."), 0050 ("A dual-mode system is the combination of a GSM mobile [6] and a UMTS mobile."). Gatherer explains, for example, that "[a] Type 2 dual-mode [user equipment (UE)] is defined by [the 3rd Generation Partnership Project (3GPP)], as a handset that can receive data from a cell in one mode (e.g. WCDMA) while at the same time it can monitor neighbor cells in another mode (e.g. GSM)." EX1019, 0050. A POSA would have known that "GSM use[d] combined TDMA and FDMA with frequency-division duplex for access," Gibson, 0319, similar to Kaiser's system, *see, e.g.*, EX1007, 0003 (teaching the introduction of "a time division multiple access (TDMA) component in the OFDM-frame structure)"). And Frank describes its system and method in the context of CDMA (or WCDMA). EX1009, 1:6-9. Accordingly, Gatherer's discussion of a handset that supports both WCDMA and GSM technologies confirms that it would have been routine, predictable, and obvious to a POSA to combine Frank's random-access techniques in the Kaiser-Gibson system.

86. Second, relatedly, Kaiser and Frank describe similar spread-spectrum technologies, such as using similar spreading codes (e.g., Walsh-Hadamard). EX1007, 0002; EX1009, 9:26. A POSA would recognize these similarities and have understood that Kaiser and Frank disclose compatible technologies that, when combined, yield predictable results.

87. Finally, as I discussed above, Frank identifies a number of ways in which Frank's random-access techniques improve CDMA-based systems. *See, e.g.*, EX1009, 6:1-7:11. A POSA would recognize that Frank's techniques would improve similar systems, such as Kaiser's system (or the combined Kaiser-Gibson system), in the same ways. For example, Frank teaches that advantages of its random-access techniques include (among other things) optimizing each portion of the random-access request, simplifying hardware design, minimizing processing delay, less buffering, and reducing the mobile station's transmitted power. EX1009, 6:7-24, 8:19-22, 9:19-23. A POSA would have recognized that implementing Frank's random-access techniques would confer the same technical advantages to Kaiser's system (or the combined Kaiser-Gibson system). A POSA would thus have reasonably expected that combining Frank's techniques with the Kaiser-Gibson system would result in successful random access and carrier assignment.

88. In sum, the Kaiser-Gibson-Frank combination is nothing more than the combination of well-known, prior-art elements (e.g., Kaiser's FDMA and TDMA access methods, Gibson's random-access channel and channel-assignment procedure, and Frank's random-access techniques) according to their established functions, yielding predictable results (e.g., channel/carrier assignment in a system employing FDMA and/or TDMA).

E. Independent Claim 1

89. In my opinion, the combination of Kaiser, Gibson, and Frank teaches, suggests, or renders obvious each and every element of independent claim 1, and a POSA would have been motivated to combine the references and had a reasonable expectation of success in doing so. Claim 1 is reproduced below.

> **[Preamble]** 1. A mobile station comprising:
>
> **[1.1]** a transmitter configured to:
>
> **[1.2]** transmit, to a base station, a first uplink signal within a frequency band, wherein the first uplink signal is an orthogonal frequency division multiplexing (OFDM) signal and utilizes a frame format comprising a plurality of timeslots, each timeslot comprising a plurality of OFDM symbols;
>
> **[1.3]** transmit, to the base station, a random access signal followed by a guard period in only a portion of the frequency band, wherein the random access signal includes a sequence associated with the base station, wherein a time duration of a combination of the random

access signal and the guard period is greater than a time duration of at least one of the plurality of OFDM symbols; and

[1.4] a receiver configured to receive, from the base station, a response message.

1. Claim 1's Preamble

[Preamble] 1. *A mobile station comprising:*

90. Kaiser teaches or suggests a "*mobile station*."

91. Kaiser's system includes a "mobile station" that implements Kaiser's SS-MC-MA scheme. EX1007, 0004 (describing "System Performance" and referencing "the mobile station"); *see also* EX1007, 0002 (showing in Figure 1 the "SS-MC-MA transmitter for the data of user *i*"), 0004 (describing "mobile users").

2. Limitation 1.1

[1.1] *a transmitter configured to:*

92. Kaiser teaches or suggests "*a transmitter*." In Section 2.1 and Figure 1, Kaiser discloses a transmitter, shown below. EX1007, 0002, FIG. 1.

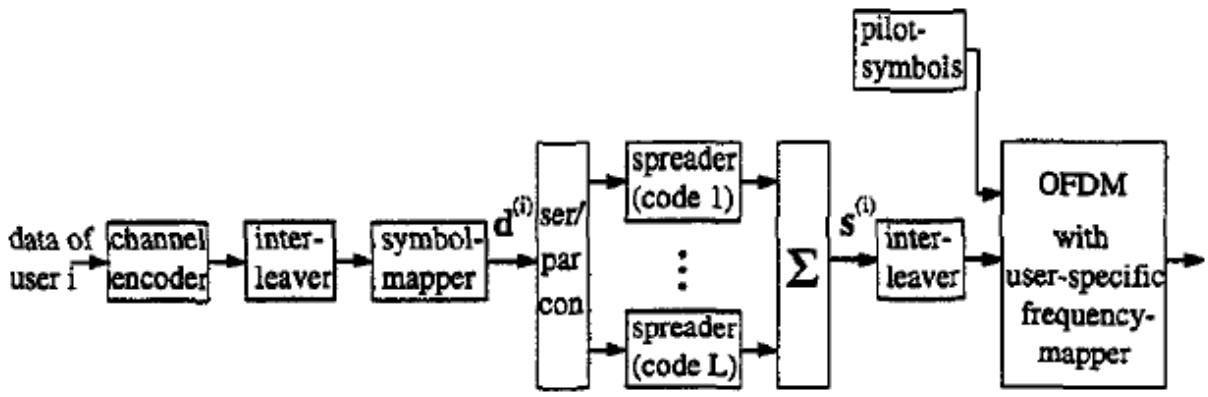

Figure 1: SS-MC-MA transmitter for the data of user i.

EX1007, 0002, FIG. 1.

3. Limitation 1.2

[1.2] *transmit, to a base station, a first uplink signal within a frequency band, wherein the first uplink signal is an orthogonal frequency division multiplexing (OFDM) signal and utilizes a frame format comprising a plurality of timeslots, each timeslot comprising a plurality of OFDM symbols;*

93. Kaiser teaches or suggests that the transmitter is configured to "*transmit, to a base station, a first uplink signal within a frequency band, wherein the first uplink signal is an orthogonal frequency division multiplexing (OFDM) signal and utilizes a frame format comprising a plurality of timeslots, each timeslot comprising a plurality of OFDM symbols*."

94. Kaiser teaches "*a base station*": "The required data rate is transmitted to the base station, which allocates an appropriate set of sub-carriers." EX1007, 0003.

95. Kaiser teaches or suggests that the transmitter is configured to "*transmit, to [the] base station, a first uplink signal within a frequency band, wherein the first uplink signal is an orthogonal frequency division multiplexing (OFDM) signal*." Kaiser focuses on "the up-link of a mobile radio station," but explains that "the same radio interface can be used for the up- and the down-link." EX1007, 0001; *see also* EX1007, 0004 ("… the up-link of a SS-MC-MA system is considered."). Kaiser discloses that "data transmission can be based on OFDM-frames, where each frame consists of a group of several OFDM-symbols." EX1007, 0003. As shown in Figure 2 below, Kaiser discloses that "[e]ach user of a cell transmits on a sub-set of sub-carriers, where the sub-sets of sub-carriers of the users within a cell are disjunct." EX1007, 0002, FIG. 2. Kaiser explains that "the OFDM unit" of the transmitter of Figure 1 "performs [the] user-specific frequency mapping, illustrated in Fig. 2." EX1007, 0002. Kaiser further discloses that, "[i]n the OFDM unit 8 chips are modulated on 8 sub-carriers per OFDM-symbol …." EX1007, 0004.

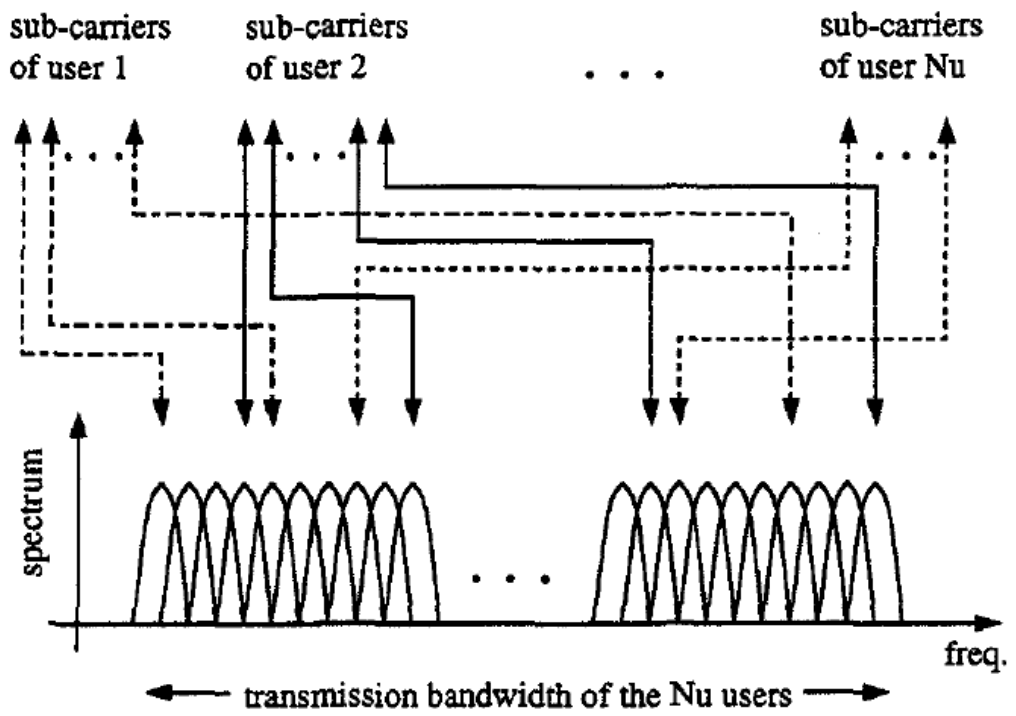

Figure 2: Pseudo-random user-specific frequency-mapping and -demapping.

EX1007, 0002, FIG. 2.

96. Figure 4 of Kaiser (below) illustrates an "OFDM frame with 256 sub-carriers and 31 OFDM-symbols" and an example of the sub-carrier assignment for "user i." EX1007, 0004, FIG. 4. As shown, user i's mobile station transmits data and pilot symbols on a sub-set of the 256 sub-carriers in the OFDM-frame. EX1007, 0004, FIG. 4. A POSA would have understood that, in Kaiser, a user's mobile station transmits to the base station that performed the sub-carrier assignment. *See* EX1007, 0003 ("the base station … allocates an appropriate set of sub-carriers").

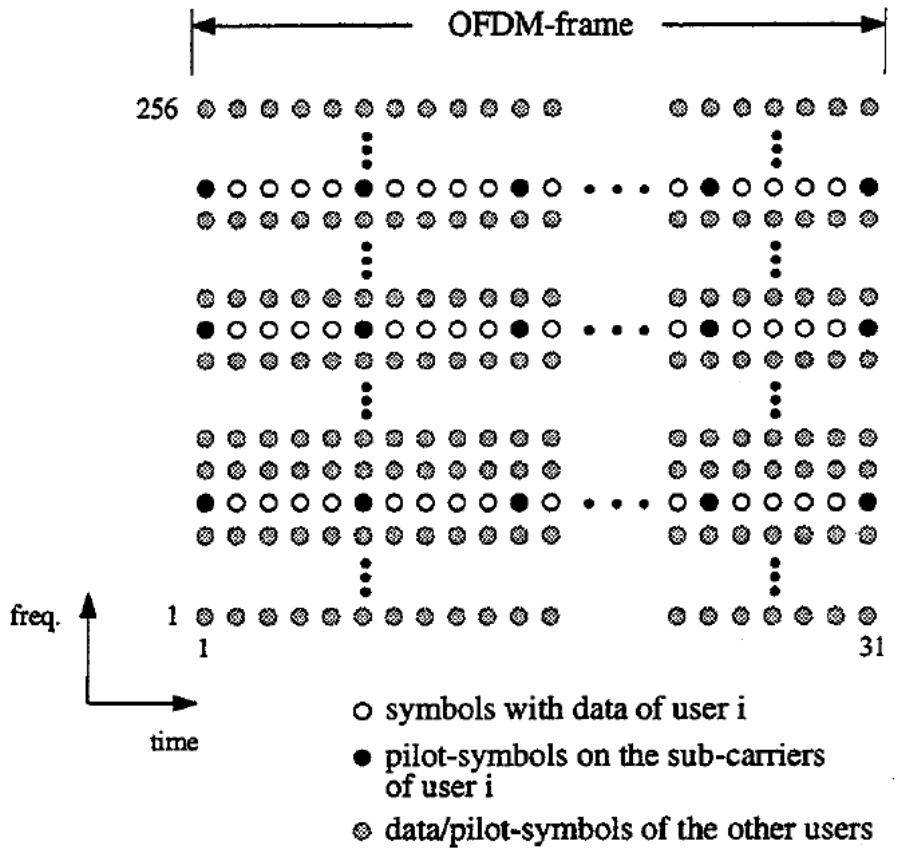

Figure 4: OFDM frame with 256 sub-carriers and 31 OFDM-symbols.

EX1007, 0004, FIG. 4.

97. In Kaiser, the "*first uplink signal*" is "*within a frequency band*." Kaiser discloses that the system operates in a "frequency band." EX1007, 0003. A POSA would have understood that Kaiser's "frequency band" includes the entire range of frequencies used for both up- and down-links, including frequencies used for the random-access channel discussed in Limitation 1.3 below. As an example, Figure 4 of Kaiser shows user i's mobile device transmitting on the uplink an OFDM signal (the sub-carriers in the OFDM frame assigned to user i) within a

frequency band (a band that includes, but is not limited to, the 256 sub-carriers shown in Figure 4 of Kaiser). Indeed, it was well-known and obvious that existing cellular systems (including both up- and down-links) operated in a portion of the spectrum or frequency band that was typically assigned by a governmental authority. *See* EX1008, 0406 ("In most countries there is a centralized organization, usually performed by a government entity, regulating the assignment and use of the radio spectrum."), 0423 ("In mobile radio communications an operator will be assigned a specific bandwidth W in which to operate a service."), 0256 (Table 15.1, showing the frequency bands for IS-54, IS-95, GSM, and DCS-1800 systems), 0319 (Section 17.4.3, discussing GSM), 0473 (Table 26.1, showing frequency bands and enhancements to then-existing systems).

98. Kaiser teaches or suggests that "*the first uplink signal … utilizes a frame format comprising a plurality of timeslots, each timeslot comprising a plurality of OFDM symbols*." Kaiser discloses that the system can have a "time division multiple access (TDMA) component in the OFDM-frame structure" so that "different groups of users can be supplied in subsequent OFDM-frames, resulting in an increasing number of active users." EX1007, 0003. Kaiser discloses an implementation where "[t]he SS-MC-MA system has a TDMA component, where, in a cycle of 4 [OFDM] frames (each frame consists of 31 OFDM-symbols,

see Fig. 4), each frame transmits the data of another group of 32 users," thus supporting "128 active users." EX1007, 0004.

99. Kaiser's disclosures directed to the "TDMA component" teach, or at least suggest to, a POSA a "*frame format comprising a plurality of timeslots*." As Gibson explains, "TDMA (time-division multiple access)" is "[a] form of multiple access giving each user a different time slot for transmission and reception of signals."), EX1008, 0456, and thus a POSA would have known and found obvious that Kaiser's "TDMA component" introduces "*frame format comprising a plurality of timeslots*." For example, Kaiser's TDMA example supporting 128 active users "*utilizes a frame format*" (a cycle of four OFDM frames) "*comprising a plurality of timeslots*" (the duration of each OFDM frame being a timeslot supporting 32 active users, resulting in four timeslots). Modifying Figure 4 of Kaiser, the figure below illustrates Kaiser's TDMA implementation having a cycle of four OFDM frames and four resulting timeslots:

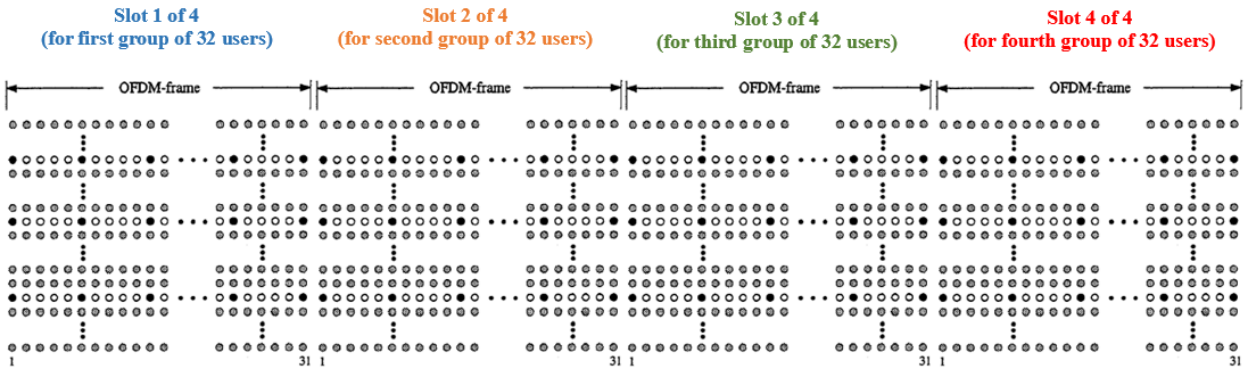

EX1007, 0004, FIG. 4 (modified and annotated).

100. Kaiser discloses that "each [OFDM] frame consists of 31 OFDM-symbols." EX1007, 0004. Kaiser thus teaches that "*each timeslot*" (the duration of an OFDM frame) comprises "*a plurality of OFDM symbols*" (e.g., 31 OFDM symbols). Accordingly, in my opinion, Kaiser teaches or suggests that "*the first uplink signal*" (e.g., user i's data and pilot OFDM symbols in the OFDM frame of Figure 4) "*utilizes a frame format comprising a plurality of timeslots*" (e.g., cycle of four OFDM frames), where "*each timeslot compris[es] a plurality of OFDM symbols*" (e.g., 31 OFDM symbols per timeslot).

101. I note that the '908 patent's specification does not use or define the term "*frame format*." Nor do the claims or specification limit "*frame format*" to a single frame, such as a single OFDM frame. Rather, the claims merely require that the "*frame format*" comprises "*a plurality of timeslots, each timeslot comprising a plurality of OFDM symbols*," EX1001, 11:13-15, which, as discussed above, Kaiser's cycle-of-four-OFDM-frames implementation satisfies.

102. However, to the extent the term "*frame format*" is interpreted as limited to a single OFDM frame—an interpretation that I do not advance because it is not supported by the specification or claims, in my view—Kaiser still teaches or suggests the claimed "*frame format*" commensurate with the '908 patent's disclosure. The '908 patent describes a "slot structure of an OFDM system" where each timeslot "is comprised of 8 OFDM symbols." EX1001, 4:19-23; *compare*

EX1001, 4:32-33 (example "OFDM symbol duration" of "100 us"), *with* EX1007, 0004 ("OFDM-symbol duration is T_s = 128μs"). Kaiser discloses that "each [OFDM] frame consists of 31 OFDM-symbols." EX1007, 0004. Accordingly, applying the '908 patent's example of 8 OFDM symbols/timeslot, each of Kaiser's OFDM frames includes a plurality of timeslots (four), each of which includes a plurality of OFDM symbols (at least seven).

4. Limitation 1.3

[1.3] *transmit, to the base station, a random access signal followed by a guard period in only a portion of the frequency band, wherein the random access signal includes a sequence associated with the base station, wherein a time duration of a combination of the random access signal and the guard period is greater than a time duration of at least one of the plurality of OFDM symbols; and*

103. The combination of Kaiser, Gibson, and Frank renders obvious that the transmitter is configured to "*transmit, to the base station, a random access signal followed by a guard period in only a portion of the frequency band, wherein the random access signal includes a sequence associated with the base station, wherein a time duration of a combination of the random access signal and the guard period is greater than a time duration of at least one of the plurality of OFDM symbols*."

104. Kaiser discloses that the "SS-MC-MA [system] assigns each user exclusively its own sub-carriers according to an FDMA scheme," EX1007, 0001, but does not describe the details of the sub-carrier (or sub-channel) assignment procedure. For these details, a POSA would have turned to Gibson. *See* Section VIII.D.1.

105. Gibson teaches "*transmit[ting], to [a] base station, a random access signal*." Gibson discloses channel assignment "[i]n both FDMA and TDMA systems" using "a separate uplink channel on which mobiles can notify the base station of their need for a traffic channel." EX1008, 0319. Gibson explains that "[t]his uplink channel is" called "the **random-access channel**." EX1008, 0319. Gibson discloses a random access "procedure" whereby "[t]he mobile initiates the procedure by transmitting a request on the random-access channel" to the base station, as shown in Figure 17.3 below. EX1008, 0319.

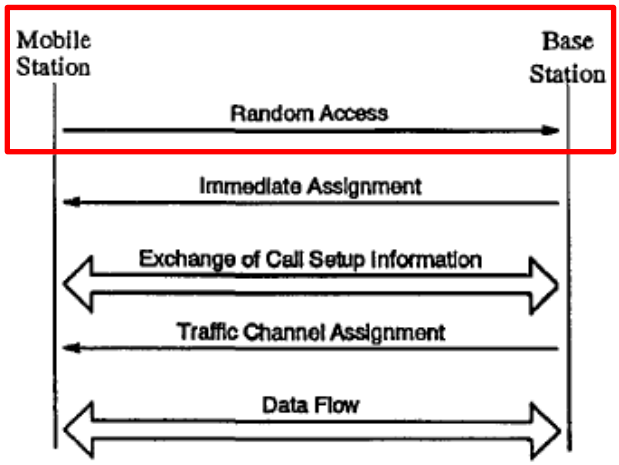

FIGURE 17.3 Mobile-originating call establishment.

EX1008, 0320, FIG. 17.3 (annotated).

106. As I explained above, *see* Section VIII.D.1, it would have been obvious to a POSA to combine Gibson's random-access channel and procedure with Kaiser's system. Specifically, it would have been obvious to include a random-access channel as a separate, shared uplink channel, as disclosed by Gibson, in Kaiser's system such that the uplink in the combined Kaiser-Gibson system includes Kaiser's dedicated sub-channels and Gibson's separate, shared random-access channel. It would have been further obvious to perform the channel-assignment procedure, as disclosed by Gibson, in Kaiser's system. Gibson's express teachings would have motivated a POSA to make this combination. *See* Section VIII.D.1.

107. Because Gibson does not describe certain details of the random-access procedure, such as details of the initial random access request, a POSA would have turned to Frank. *See* Section VIII.D.2.

108. Frank teaches or suggests "*transmit[ting], to the base station, a random access signal followed by a guard period in only a portion of the frequency band*." Frank discloses transmitting, to a "base station," a random-access "frame structure … with a separate preamble and data portion" having a "guard interval … inserted between the preamble and data portion of the frame." EX1009, 8:14-23. Frank further discloses that the guard interval is a period in which the mobile station does not transmit, advantageously reducing the mobile station's

transmitted power. EX1009, 9:14-23 ("a guard time interval, T_G, can be generated by interrupting the MS's transmission power from the end of the preamble to the beginning of the next frame slot"; "can reduce the MS's transmitted power (e.g., albeit slightly, by interrupting transmission during the interval between the preamble and data portion of the random access request"). A POSA would have understood and found obvious that Frank's preamble is a "*random access signal*"—it is a signal used for random access in a cellular system. Frank thus teaches that the preamble ("*random access signal*") is "*followed by*" the guard interval ("*guard period*").

109. Frank's random access signal and guard period are "*in only a portion of the frequency band*." As I explained above, in the combined Kaiser-Gibson system, the uplink includes Kaiser's dedicated sub-channels and Gibson's separate, shared random-access channel. Frank discloses transmitting the preamble and guard interval in "an uplink common physical channel (random access channel)." EX1009, 8:14-16. It thus would have been obvious to a POSA to transmit Frank's preamble and guard interval in the separate, shared random-access portion of the Kaiser-Gibson uplink, which is "*only a portion of the frequency band*." Accordingly, in the combined Kaiser-Gibson-Frank system, (i) the uplink includes Kaiser's dedicated sub-channels and Gibson's separate, shared random-access channel, (ii) Frank's random-access preamble ("*the random access signal*") is

transmitted in the separate, shared random-access channel, and (iii) the system uses Gibson's procedure shown in Figure 17.3 to assign channels.

110. Frank teaches or suggests that "*the random access signal includes a sequence associated with the base station*." Frank discloses that a base station broadcasts "a known base station-unique spreading code … via the base station's broadcast channel," EX1009, 9:6-9, and "can be continuously 'listening' for [a mobile station's] transmitted preamble," EX1009, 8:29-30. Frank discloses that "[i]n order to distinguish between simultaneous random access requests being transmitted by different MSs, each preamble of a random access request is modulated by a unique signature pattern," which "is spread with [the] known base station-unique spreading code." EX1009, 8:31-9:9. Frank's "base station-unique spreading code" is a "*sequence associated with the base station*."

111. Frank teaches or suggests that "*a time duration of a combination of the random access signal and the guard period is greater than a time duration of at least one of the plurality of OFDM symbols*." Frank discloses an example "where a preamble is 16 symbols" or "1 ms long," and the "guard time interval, T_G, … could be 0.25 ms long." EX1009, 10:1-5. Kaiser discloses an example where the duration of an OFDM symbol is "128 µs." EX1007, 0004. The combined duration of Frank's preamble and guard period (1ms + 0.25ms = 1.25ms) is greater than the duration of at least one OFDM symbol (128µs).

112. As an additional, independent reason, Frank also discloses that because the duration of the preamble is typically "less than the length … of N frame slots in existing systems," the guard interval can extend "from the end of the preamble to the beginning of the next frame slot." EX1009, 9:11-16. A POSA would have understood that even if the duration of Frank's preamble and guard period was only one slot in the Kaiser-Gibson system (having 31 symbols, or alternatively, at least 7 symbols), it would be "*greater than a time duration of at least one of the plurality of OFDM symbols*." *See* Section VIII.E.3 (explaining for Limitation 1.2 that Kaiser teaches 31 (or, alternatively, at least seven) OFDM symbols per slot).

113. It would have been obvious to a POSA to combine Frank's random-access techniques with the Kaiser-Gibson system. Specifically, it would have been obvious to transmit Frank's preamble and guard period in the separate random-access channel of Kaiser-Gibson. As I discussed above, the references' express teachings and the prevailing design incentives and other market forces would have motivated a POSA to make the combination. *See* Section VIII.D.2.

114. It would have been obvious to a POSA that the same or a different "*transmitter*" that is configured to transmit the "*first uplink signal*" would transmit the "*random access signal*" and "*guard period*." Again, Kaiser's system transmits spread-spectrum signals using similar spreading codes as Frank. EX1007, 0001-02;

EX1009, 9:26. It would have been obvious to (1) use or modify Kaiser's transmitter to transmit Frank's preamble and guard period, or (2) modify Kaiser's mobile station to include a transmitter capable of transmitting Frank's preamble and guard period. The combination is nothing more than the combination or modification of well-known, prior-art elements (e.g., Kaiser's transmitter) according to their established functions, yielding predictable results (e.g., transmission of Frank's preamble and guard period). And, as I explained above, it was also well-known by January 2004 for a single mobile station to support the multiple-access technologies used in the combined Kaiser-Gibson-Frank system, *see* Section VIII.D.2, further confirming that (1) using or modifying Kaiser's transmitter to transmit Frank's preamble and guard period, or (2) modifying Kaiser's mobile station to include a transmitter capable of transmitting Frank's preamble and guard period was routine, predictable, and obvious. And, in any event, I understand and have been advised that obviousness does not require that the references are physically combinable to render claims obvious.

5. Limitation 1.4

[1.4] *a receiver configured to receive, from the base station, a response message.*

115. The combination of Kaiser, Gibson, and Frank system renders obvious "*a receiver configured to receive, from the base station, a response*

message." Kaiser discloses a "mobile station" but does not expressly disclose "*a receiver*" of the mobile station. EX1007, 0004. To be sure, Kaiser does disclose a receiver in Section 2.2 and Figure 3, but does not expressly state that the receiver of Figure 3 is for the mobile station. That said, Kaiser explains that the same transmitter (shown in Figure 1) is used for both up- and down-links, EX1007, 0002 ("Fig. 1 shows the block diagram of an SS-MC-MA transmitter (same for up- and down-link) . . . ."), which would have at least suggested to a POSA that Kaiser's mobile station would include the corresponding SS-MC-MA receiver shown in Figure 3. Indeed, a POSA would have understood and it would have been obvious that mobile stations include "*a receiver*" in order to communicate and consume services, such as those disclosed by Kaiser. EX1007, 0001.

116. In any event, Gibson teaches or suggests "*a receiver configured to receive, from the base station, a response message*." Gibson discloses that mobile stations have receivers, *see, e.g.*, EX1008, 0150-64 (describing optimum receiver design), 0414 ("mobile station receiver"), and, with respect to Figure 17.3, that the mobile station receives an "Immediate Assignment" message from the base station, EX1008, 0319-20; *id*., 0319 ("Once the base station has received the mobile's request, it responds with an immediate assignment message that directs the mobile to tune to a dedicated control channel for the ensuing call setup.").

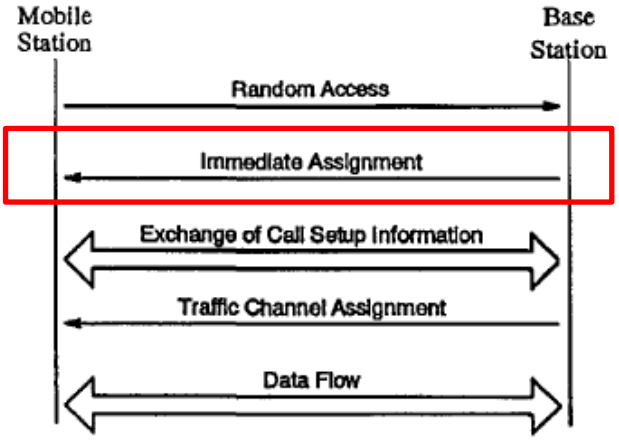

FIGURE 17.3 Mobile-originating call establishment.

EX1008, 0320, FIG. 17.3 (annotated).

117. Again, a POSA would have been motivated to use Gibson's "procedure" of Figure 17.3 for channel assignment in Kaiser's system. *See* Sections VIII.D.1, VIII.E.4.

118. I note that Frank also teaches or suggests the claimed "*receiver*." Frank discloses mobile stations that receive (among other things) "a known base station-unique spreading code" that is provided "via the base station's broadcast channel." EX1009, 9:5-9. A POSA would have understood and found obvious that a mobile station includes "*a receiver*" in order to receive messages, such as broadcasts and other messages from the base station, as disclosed in Frank.

F. Independent Claim 11

119. In my opinion, the combination of Kaiser, Gibson, and Frank teaches, suggests, or renders obvious each and every element of independent claim 11, and

a POSA would have been motivated to combine the references and had a reasonable expectation of success in doing so. Claim 11 is reproduced below.

> **[Preamble]** 11. A method performed by a mobile station, the method comprising:
>
> **[11.1]** transmitting, to a base station, a first uplink signal within a frequency band, wherein the first uplink signal is an orthogonal frequency division multiplexing (OFDM) signal and utilizes a frame format comprising a plurality of timeslots, each timeslot comprising a plurality of OFDM symbols;
>
> **[11.2]** transmitting, to the base station, an random access signal followed by a guard period in only a portion of the frequency band, wherein the random access signal includes a sequence associated with the base station, wherein a time duration of a combination of the random access signal and the guard period is greater than a time duration of at least one of the plurality of OFDM symbols; and
>
> **[11.3]** receiving, from the base station, a response message.

120. Claim 11 is directed to a "*method performed by a mobile station*" and recites method steps that mirror the functions required by claim 1's "*transmitter*" and "*receiver*." The prior art teaches "*method[s] performed by a mobile station*," such as schemes, procedures, protocols, etc. *See, e.g.*, EX1007, 0001, Abstract ("scheme"); EX1008, 0319-20 ("procedure," "protocol"). Claim 11 thus would have been obvious for the same reasons as claim 1 that I discussed above. *See* Section VIII.E.

G. Independent Claim 21

121. In my opinion, the combination of Kaiser, Gibson, and Frank teaches, suggests, or renders obvious each and every element of independent claim 21, and a POSA would have been motivated to combine the references and had a reasonable expectation of success in doing so. Claim 21 is reproduced below.

[Preamble] 21. A mobile station comprising:

[21.1] a first type of transmitter signal processing circuit configured to:

generate a first uplink signal, wherein the first uplink signal is an orthogonal frequency division multiplexing (OFDM) signal and utilizes a frame format comprising a plurality of timeslots, each timeslot comprising a plurality of OFDM symbols;

modulate the first uplink signal onto a first set of OFDM subcarriers;

[21.2] a second type of transmitter signal processing circuit configured to generate an random access signal followed by a guard period, wherein the random access signal includes a sequence associated with a base station, wherein a time duration of a combination of the random access signal and the guard period is greater than a time duration of at least one of the plurality of OFDM symbols;

[21.3] a circuit configured to provide at least the first uplink signal or the random access signal to output a digital signal;

[21.4] a digital-to-analog (D/A) conversion circuit configured to convert the digital signal to an analog signal;

[21.5] wherein the mobile station is configured to transmit, to the base station, the analog signal in a frequency band, **[21.6]** wherein the random access signal occupies in a frequency domain only a portion of the frequency band;

[21.7] wherein the mobile station is further configured to receive, from the base station, a second analog signal; and

[21.8] wherein the mobile station further comprises:

an analog-to-digital (A/D) conversion circuit configured to convert the second analog signal to a second digital signal; and

[21.9] a receiver circuit configured to receive, based on the second digital signal, a response message.

1. Claim 21's Preamble

[Preamble] 21. *A mobile station comprising:*

122. Kaiser teaches or suggests a "*mobile station*." EX1007, 0004; Section VIII.E.1 (addressing Claim 1's Preamble).

2. Limitation 21.1

[21.1] *a first type of transmitter signal processing circuit configured to:* *generate a first uplink signal, wherein the first uplink signal is an orthogonal frequency division multiplexing (OFDM) signal and utilizes a frame format comprising a plurality of timeslots, each timeslot comprising a plurality of OFDM symbols;* *modulate the first uplink signal onto a first set of OFDM subcarriers;*

123. Kaiser teaches or suggests "*a first type of transmitter signal processing circuit configured to: generate a first uplink signal, wherein the first uplink signal is an orthogonal frequency division multiplexing (OFDM) signal and utilizes a frame format comprising a plurality of timeslots, each timeslot comprising a plurality of OFDM symbols; [and] modulate the first uplink signal onto a first set of OFDM subcarriers*."

124. As explained in Limitation 1.2, Kaiser teaches or suggests a transmitter configured to transmit "*a first uplink signal, wherein the first uplink signal is an orthogonal frequency division multiplexing (OFDM) signal and utilizes a frame format comprising a plurality of timeslots, each timeslot comprising a plurality of OFDM symbols*." Section VIII.E.3.

125. Kaiser teaches or suggests "*a first type of transmitter signal processing circuit configured to: generate [the] first uplink signal*." Kaiser

discloses a "*transmitter*" (below) comprising several components, including a "serial to parallel convert[er]" and an "OFDM unit." EX1007, 0002, FIG. 1 ("ser/par con" and "ODFM with user-specific frequency-mapper"). A POSA would have understood and found obvious that (at least) Kaiser's serial-to-parallel converter and OFDM unit, together, satisfy "*a first type of transmitter signal processing circuit configured to: generate [the] first uplink signal*." Claim 21 (and dependent claim 30) describes "*first type of transmitter signal processing circuit*" in terms of its functions, which are met by the Kaiser's serial-to-parallel converter and OFDM unit.

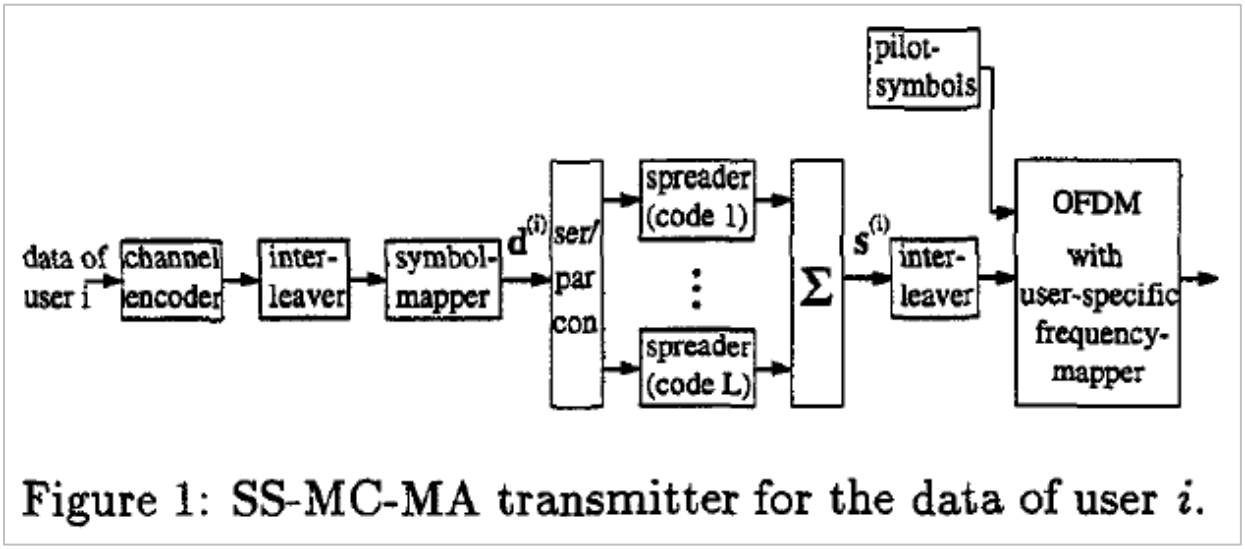

Figure 1: SS-MC-MA transmitter for the data of user i.

EX1007, 0002, FIG. 1.

126. Kaiser teaches or suggests that the "*first type of transmitter signal processing circuit*" is also configured to "*modulate the first uplink signal onto a first set of OFDM subcarriers*." Kaiser discloses that "the OFDM unit … performs

a user-specific frequency mapping, illustrated in Fig. 2," and that "[e]ach user of a cell transmits on a sub-set of sub-carriers." EX1007, 0002; *see also id*., FIGS. 2, 4. Kaiser discloses that "[i]n the OFDM unit 8 chips are modulated on 8 sub-carriers per OFDM-symbol …." EX1007, 0004.

3. Limitation 21.2

[21.2] *a second type of transmitter signal processing circuit configured to generate an random access signal followed by a guard period, wherein the random access signal includes a sequence associated with a base station, wherein a time duration of a combination of the random access signal and the guard period is greater than a time duration of at least one of the plurality of OFDM symbols;*

127. The combination of Kaiser, Gibson, and Frank renders obvious "*a second type of transmitter signal processing circuit configured to generate an random access signal followed by a guard period, wherein the random access signal includes a sequence associated with a base station, wherein a time duration of a combination of the random access signal and the guard period is greater than a time duration of at least one of the plurality of OFDM symbols*."

128. As I explained in Limitation 1.3, the combination of Kaiser, Gibson, and Frank renders obvious transmitting a "*random access signal followed by a guard period, wherein the random access signal includes a sequence associated with a base station, wherein a time duration of a combination of the random access*

signal and the guard period is greater than a time duration of at least one of the plurality of OFDM symbols." Section VIII.E.4.

129. The combination of Kaiser, Gibson, and Frank further renders obvious "*a second type of transmitter signal processing circuit configured to generate*" the random-access signal and guard period. Although not required in claim 21, the '908 patent describes the "*random access signal*" as a spread-spectrum signal. *See, e.g.*, EX1001, 2:49-50 ("the DSSS signal is used for … initial random access"), claim 29. Both Kaiser and Frank teach or suggest a "*transmitter signal processing circuit configured to generate*" spread-spectrum signals. Kaiser's transmitter of Figure 1 includes signal-processing circuitry to generate spread-spectrum signals, such as the circuitry that multiplies "[e]ach of the *L* data-symbols … with an orthogonal spreading code (e.g., Walsh-Hadamard code []) of length *L*." EX1007, 0002, FIG. 1 ("spreader (code 1) … spreader (code L)"). A POSA would have understood and found obvious that Kaiser's circuitry for generating spectrum-spectrum signals is a different type ("*second type*") than Kaiser's circuitry for generating the OFDM signal ("*first type*"), discussed in Limitation 21.1.

130. As explained in Limitation 1.3, Frank discloses that "each preamble of a random access request is modulated by a unique signature pattern," which "is spread with a known base station-unique spreading code." EX1009, 8:31-9:9; *see also* Section VIII.E.4. A POSA would have understood and found obvious that

Frank's mobile stations include a "*transmitter signal processing circuit*" that generates spread-spectrum signals, such as Frank's preamble. *See* Section VII.E (discussing standard mobile station components). A POSA would have also understood and found obvious that Frank's circuitry for generating spectrum-spectrum signals is different type ("*second type*") than Kaiser's circuitry for generating the OFDM signal ("*first type*"), discussed in Limitation 21.1.

131. As explained in Limitation 1.3, it would have been obvious to (1) use or modify Kaiser's transmitter to transmit Frank's preamble and guard period, or (2) modify Kaiser's mobile station to include a transmitter capable of transmitting Frank's preamble and guard period. Section VIII.E.4. Either modification would result in the "*second type of transmitter signal processing circuit*."

4. Limitation 21.3

[21.3] *a circuit configured to provide at least the first uplink signal or the random access signal to output a digital signal;*

132. Kaiser teaches or suggests "*a circuit configured to provide at least the first uplink signal or the random access signal to output a digital signal*." Kaiser discloses that its system supports "the transmission of a wide range of multi-media services with different data rates," including "speech." EX1007, 0003. Kaiser discloses a "speech encoder of the mobile station" that "delivers a data rate of

10.46 kbit/s to the channel encoder." EX1007, 0004. Kaiser describes the data delivered to the channel encoder as "binary data." EX1007, 0004.

133. A POSA would have known that speech (e.g., human speech) is an analog signal. *See* EX1008, 0032 ("To transmit analog message signals, such as speech signals or video signals, by digital means, the signal has to be converted into digital form. This process is known as analog-to-digital conversion."). A POSA would have further understood and found obvious that Kaiser's "speech encoder," which delivers "binary data" to the "channel encoder," converts analog speech signals into digital signals. *See* EX1008, 0542 ("An input speech signal is processed by a speech encoder to generate a digital representation at a net bit rate of R_s bits per second."). Accordingly, Kaiser teaches or suggests "*a circuit*" (e.g., speech encoder) "*configured to provide at least the first uplink signal*" (e.g., a speech signal captured by Kaiser's mobile station) "*to output a digital signal*" (e.g., the binary data output from Kaiser's speech encoder).

134. Alternatively, the combination of Kaiser and Gibson renders obvious Limitation 21.3. Again, Kaiser discloses a "speech encoder of the mobile station." EX1007, 0004. Gibson discloses that "speech signals" are "analog message signals," Gibson, 0032, and "a speech encoder" that "generate[s] a digital representation" of "[a]n input speech signal," EX1008, 0542. It would have been obvious to use Gibson's speech encoder to digitize analog speech signals in

Kaiser's system because the combination involves nothing more than the simple substitution of one known element (Kaiser's speech encoder) for another (Gibson's speech encoder), and the predictable use of prior art elements (Gibson's speech encoder) according to their established functions. Accordingly, a POSA would have been both motivated to make the combination and reasonably expected success in doing so.

135. I note that it also would have been obvious that the mobile station to include "*a circuit configured to provide … the random access signal to output a digital signal*." By January 2004, it was common and well-known for mobile stations to include digital signal processing circuitry to process signals (such as Frank's random-access preamble) before converting the signal to analog RF form and transmission to the base station. *See* EX1019, 0037, FIG. 2.2.

5. Limitation 21.4

[21.4] *a digital-to-analog (D/A) conversion circuit configured to convert the digital signal to an analog signal;*

136. The combination of Kaiser, Gibson, and Frank renders obvious "*a digital-to-analog (D/A) conversion circuit configured to convert the digital signal to an analog signal*." Kaiser does not expressly disclose the claimed digital-to-analog conversion circuit. A POSA, however, would have known that in cellular systems, signals are transmitted through the air as analog, radio frequency (RF)

waves, which Gibson confirms. Gibson explains that "radio channels[] accept a continuous-time waveform as input. Consequently, a sequence of source bits, representing data or a digitized analog signal, must be converted to a continuous-time waveform at the transmitter." EX1008, 0055. A POSA would have known that by "continuous-time waveform," Gibson is referring to analog signals. It thus would have been obvious to a POSA to include a digital-to-analog conversation circuit in the combined Kaiser-Gibson-Frank system such that digital signals from the mobile station—including both the "*first uplink signal*" and the "*random access signal*"—would be converted to analog, RF waves before transmission. And, as I explained above, digital-to-analog converters used for this very purpose were basic and fundamental components in mobile stations by January 2004. *See* Section VII.E.

137. A POSA would have also known the converse: upon receipt, analog RF signals would be converted to digital form (i.e., undergo analog-to-digital conversion) for digital signal processing. Similarily, as I explained above, analog-to-digital converters were also basic and fundamental components in mobile stations by January 2004. *See* Section VII.E.

6. Limitation 21.5

[21.5] *wherein the mobile station is configured to transmit, to the base station, the analog signal in a frequency band,*

138. The combination of Kaiser, Gibson, and Frank renders obvious "*wherein the mobile station is configured to transmit, to the base station, the analog signal in a frequency band*." As explained in Limitation 1.2, Kaiser teaches or suggests a mobile station comprising a transmitter configured to transmit, to a base station, an uplink signal in a frequency band. Section VIII.E.3. As explained in Limitation 21.4, it would have been obvious that Kaiser's uplink signal is converted to analog form before transmission. Section VIII.G.5.

139. A POSA would have further understood and found obvious that the mobile station in the combined Kaiser-Gibson-Frank system would be configured to transmit, to the base station, Frank's preamble ("*random access signal*") in analog form in the frequency band. *See* Section VIII.G.5 (explaining it would have been obvious to convert the "*random access signal*" to analog before transmission); *see also* Section VII.E (describing standard mobile station components).

7. Limitation 21.6

[21.6] *wherein the random access signal occupies in a frequency domain only a portion of the frequency band;*

140. The combination of Kaiser, Gibson, and Frank renders obvious "*wherein the random access signal occupies in a frequency domain only a portion of the frequency band*." As explained in Limitation 1.3, Frank's preamble is a "*random access signal*" that is transmitted in the separate, shared random-access channel of the combined Kaiser-Gibson system, and thus "*occupies in a frequency domain only a portion of the frequency band*." Section VIII.E.4.

8. Limitation 21.7

[21.7] *wherein the mobile station is further configured to receive, from the base station, a second analog signal; and*

141. The combination of Kaiser, Gibson, and Frank renders obvious "*wherein the mobile station is further configured to receive, from the base station, a second analog signal*." As explained in Limitation 1.4, the combination of Kaiser, Gibson, and Frank renders obvious a "*mobile station*" that is "*configured to receive*" signals "*from the base station*," including Gibson's "Immediate Assignment" message of Figure 17.3. Section VIII.E.5.

142. A POSA would have understood and found obvious that the received signal is "*a second analog signal*" because, as explained in Limitation 21.4,

cellular systems transmit signals through the air as analog, radio frequency (RF) waves. Section VIII.G.5.

9. Limitation 21.8

[21.8] *wherein the mobile station further comprises:* *an analog-to-digital (A/D) conversion circuit configured to convert the second analog signal to a second digital signal; and*

143. The combination of Kaiser, Gibson, and Frank renders obvious "*wherein the mobile station further comprises: an analog-to-digital (A/D) conversion circuit configured to convert the second analog signal to a second digital signal*." As explained in Limitation 21.4, Gibson explains that "radio channels[] accept a continuous-time waveform as input. Consequently, a sequence of source bits, representing data or a digitized analog signal, must be converted to a continuous-time waveform at the transmitter." EX1008, 0055; *see* Section VIII.G.5. A POSA would have understood Gibson's teaching applies in both the uplink and downlink directions.

144. Accordingly, a POSA would have known and found obvious that mobile stations receive analog RF signals (e.g., transmitted from the base station) that need to be converted to digital form (i.e., undergo analog-to-digital conversion) for digital signal processing. It thus would have been obvious that the mobile station in the combined Kaiser-Gibson-Frank system would include the

claimed analog-to-digital conversion circuit. *See* Section VII.E (explaining that analog-to-digital converters were basic and fundamental components in mobile stations by January 2004).

10. Limitation 21.9

[21.9] *a receiver circuit configured to receive, based on the second digital signal, a response message.*

145. The combination of Kaiser, Gibson, and Frank renders obvious that "*the mobile station further comprises … a receiver circuit configured to receive, based on the second digital signal, a response message*." As explained in Limitation 1.4, the mobile station in the combined Kaiser-Gibson-Frank system comprises a receiver configured to receive a response message, such as including Gibson's "Immediate Assignment" message of Figure 17.3. Section VIII.E.5. As explained in Limitation 21.8, it would have been obvious that the response message is converted to digital form. Section VIII.G.9.

H. Dependent Claims 4, 14, and 24

4. *The mobile station of claim 1, wherein the portion of the frequency band used for transmission of the random access signal does not include control channels.*
14. *The method of claim 11, wherein the portion of the frequency band used for transmission of the random access signal does not include control channels.*
24. *The mobile station of claim 21, wherein the portion of the frequency band used for transmission of the random access signal does not include control channels.*

146. The combination of Kaiser, Gibson, and Frank renders obvious that "*the portion of the frequency band used for transmission of the random access signal does not include control channels*." In the combined Kaiser-Gibson-Frank system, (i) the uplink includes Kaiser's dedicated sub-channels and Gibson's separate, shared random-access channel, (ii) Frank's random-access preamble ("*the random access signal*") is transmitted in the separate, shared random-access channel, and (iii) the system uses Gibson's procedure shown in Figure 17.3 to assign channels. *See* Section VIII.E.4 (addressing Limitation 1.3). As shown in Figure 17.3 below, Gibson discloses that "[o]nce the base station has received the mobile's request"—e.g., Frank's preamble—"it responds with an immediate

assignment message that directs the mobile to tune to a dedicated control channel for the ensuing call setup." EX1008, 0319.

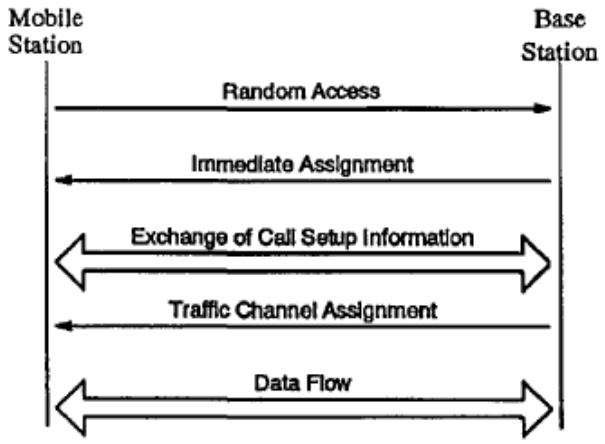

FIGURE 17.3 Mobile-originating call establishment.

EX1008, 0320, FIG. 17.3.

147. A POSA would have understood and found obvious that Gibson's shared random-access channel is wholly distinct from Gibson's dedicated control channel (and any other control channels) in order decrease traffic on the shared random-access channel, resulting in fewer collisions. *See* EX1009, 1:18-2:1 (explaining that because the expected "higher traffic density on random access channels" in 3G systems "will also result in increased collisions and access failures," there was "high demand for faster and more efficient random access"). Further, there would be no need in Gibson for the base station to instruct the mobile to tune to a dedicated control channel if the random-access channel itself included control channels. Accordingly, it would have been obvious to a POSA that, in the combined Kaiser-Gibson-Frank system, "*the portion of the frequency*

band used for transmission of the random access signal" (the shared random-access channel used to transmits Frank's preamble) "*does not include control channels*."

148. I note that the '908 patent does not define or provide examples of "*control channels*," and describes a channel-assignment procedure (similar to Gibson's procedure) that uses designated control channels:

> If the base station successfully detects the DSSS signal, it sends the acknowledgement (ACK) carrying information such as a signature or other unique mobile station identifier and power and time adjustments of the mobile on the downlink control channel in the next available timeslot. The mobile station whose transmission signature matches that of the acknowledgement then moves to the designated uplink MC control channel using the assigned time and power values and further completes the message transmission.

EX1001, 8:63-9:4. The prior-art combination's use of control channels is commensurate with the '908 patent's description.

I. Dependent Claims 6, 16, and 26

6. *The mobile station of claim 1, wherein the time duration of the combination of the random access signal and the guard period is greater than a time duration of at least two of the plurality of OFDM symbols.*
16. *The method of claim 11, wherein the time duration of the combination of the random access signal and the guard period is greater than a time duration of at least two of the plurality of OFDM symbols.*
26. *The mobile station of claim 21, wherein the time duration of the combination of the random access signal and the guard period is greater than a time duration of at least two of the plurality of OFDM symbols.*

149. Frank teaches or suggests that "*the time duration of the combination of the random access signal and the guard period is greater than a time duration of at least two of the plurality of OFDM symbols*." *See* Section VIII.E.4. As explained for Limitation 1.3, Frank discloses an example where the combined duration of Frank's preamble and guard period is 1.25ms, and Kaiser discloses an example OFDM-symbol duration of 128µs. *See* Section VIII.E.4; EX1009, 10:1-5; EX1007, 0004. Frank's 1.25ms combined duration is "*greater than a time duration of two of the plurality of OFDM symbols*" (e.g., 128µs + 128µs = 246µs).

150. As an additional, independent reason, as explained in Section VIII.E.4, a POSA would have understood that even if the duration of Frank's preamble and guard period was only one slot in the Kaiser-Gibson system (having

31 symbols, or alternatively, at least 7 symbols), it would be "*greater than a time duration of two of the plurality of OFDM symbols*." *See* Section VIII.E.3 (explaining for Limitation 1.2 that Kaiser teaches 31 (or, alternatively, at least seven) OFDM symbols per slot).

J. Dependent Claims 7, 17, and 27

7. *The mobile station of claim 1, wherein the frequency band includes an outer portion and a center portion, wherein the portion of the frequency band for the random access signal is in the center portion and uplink control signals are sent in the outer portion.*

17. *The method of claim 11, wherein the frequency band includes an outer portion and a center portion, wherein the portion of the frequency band for the random access signal is in the center portion and uplink control signals are sent in the outer portion.*

27. *The mobile station of claim 21, wherein the frequency band includes an outer portion and a center portion, wherein the portion of the frequency band for the random access signal is in the center portion and uplink control signals are sent in the outer portion.*

151. The combination of Kaiser, Gibson, and Frank renders obvious that "the frequency band includes an outer portion and a center portion, wherein the portion of the frequency band for the random access signal is in the center portion and uplink control signals are sent in the outer portion." I note that the specification of the '908 patent describes arranging a random-access signal in the

center portion of frequency band to avoid interference caused by overlaying a multi-carrier (e.g., OFDM) signal and a DSSS random-access signal. EX1001, 8:15-29. However, as I explained above, the claims do not require overlaying the claimed "*first uplink signal*" and the claimed "*random access signal*," and thus the claims are not limited to such an arrangement. I also have been advised and understand that evaluating whether a POSA would have been motivated to combine prior art elements is not limited to considering only the problem(s) that motivated the patentee, which, in this case, was avoiding interference caused by overlaying the two signals. I applied this principle in my analysis below.

152. As explained in Limitation 1.2, Kaiser discloses that its system operates in a "frequency band." EX1007, 0003; Section VIII.E.3. Although Kaiser mentions the "up-link" and the "down-link," EX1007, 0003, Kaiser does not explain how the uplink and downlink are allocated or organized.

153. Gibson teaches that systems using TDMA or FDMA, like Kaiser's system, routinely used "frequency-division duplexing (FDD)" as a "duplexing scheme." EX1008, 0318. For example, Gibson explains that "GSM uses combined TDMA and FDMA with frequency-division duplex for access." EX1008, 0319. Gibson further discloses that known cellular systems routinely used FDD. EX1008, 0473 (row: "Duplex mode"). In FDD, "separate frequency bands are provided for uplink and downlink communication." EX1008, 0318. In GSM, for example, "the

uplink frequency band 890-915 MHz is allocated, whereas the downlink uses the band 935-960 MHz." EX1008, 0320.

154. It would have been obvious to use FDD, as disclosed in Gibson, in Kaiser's system. A POSA would have been familiar with existing cellular systems, such as GSM, and Gibson's disclosure that FDD was implemented in existing systems would have motivated a POSA to use FDD in Kaiser's system. This combination represents nothing more than the predictable use of prior art elements [FDD] according to their established functions. Given FDD's wide adoption and implementation, a POSA would have reasonably expected success in using FDD in Kaiser's system.

155. As explained in Limitation 1.2, a POSA would have understood that Kaiser's "frequency band" includes the entire range of frequencies used for both up- and down-links, including frequencies used for the random-access channel discussed in limitation 1.3. Section VIII.E.3. As explained in Limitation 1.3, in the combined Kaiser-Gibson-Frank system: (i) the uplink includes Kaiser's dedicated sub-channels and Gibson's separate, shared random-access channel, and (ii) Frank's preamble ("*random access signal*") is transmitted in the random-access channel. Section VIII.E.4. Kaiser discloses that pilot symbols are transmitted in the dedicated channel. EX1007, 0003-04, FIG. 4. A POSA would have understood and

found obvious that a pilot symbol is a type of control signal, and thus both data and control signals are transmitted in Kaiser's dedicated channel.

156. I have been informed and understand that when there is a design need or market pressure to solve a problem and there are a finite number of identified, predictable solutions, a person of ordinary skill has good reason to pursue the known options within his or her technical grasp. If this leads to the anticipated success, it is likely the product not of innovation but of ordinary skill and common sense.

157. The figure I present below shows, as an example, an obvious allocation of the combined Kaiser-Gibson-Frank system's up- and down-links in a frequency band, such as the frequencies allocated for GSM.

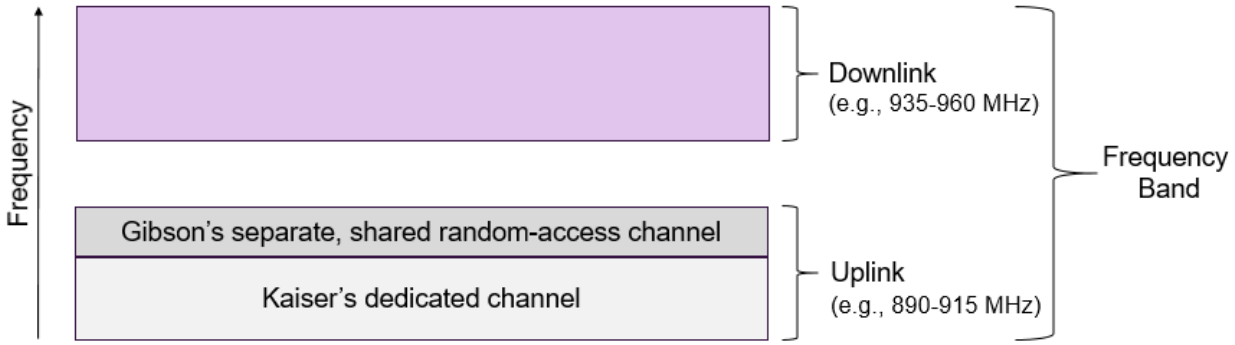

158. As shown in the figure above, it is my opinion that a POSA would have found it obvious to allocate "*the portion of the frequency band for the random access signal*" (Gibson's separate, shared random-access channel) "*in the center portion*" (at higher frequencies in the uplink than Kaiser's dedicated channel),

"*and uplink control signals are sent in the outer portion*" (the lower frequencies allocated for Kaiser's dedicated channel). A POSA would have understood that there was a design need to solve a problem: for FDMA and TDMA systems, frequencies in the uplink needed to be allocated for the separate, random-access channel. *See* EX1008, 0319. Once the frequency range for the uplink was defined, such as 890-915 MHz in GSM, a POSA would have understood there were a finite number of predictable solutions for where to place the random-access channel: (1) below the dedicated channel(s) (in lower frequencies); (2) in between dedicated channels; or (3) above the dedicated channel(s) (in higher frequencies). These finite, predictable solutions are illustrated in the series of figures I present below.

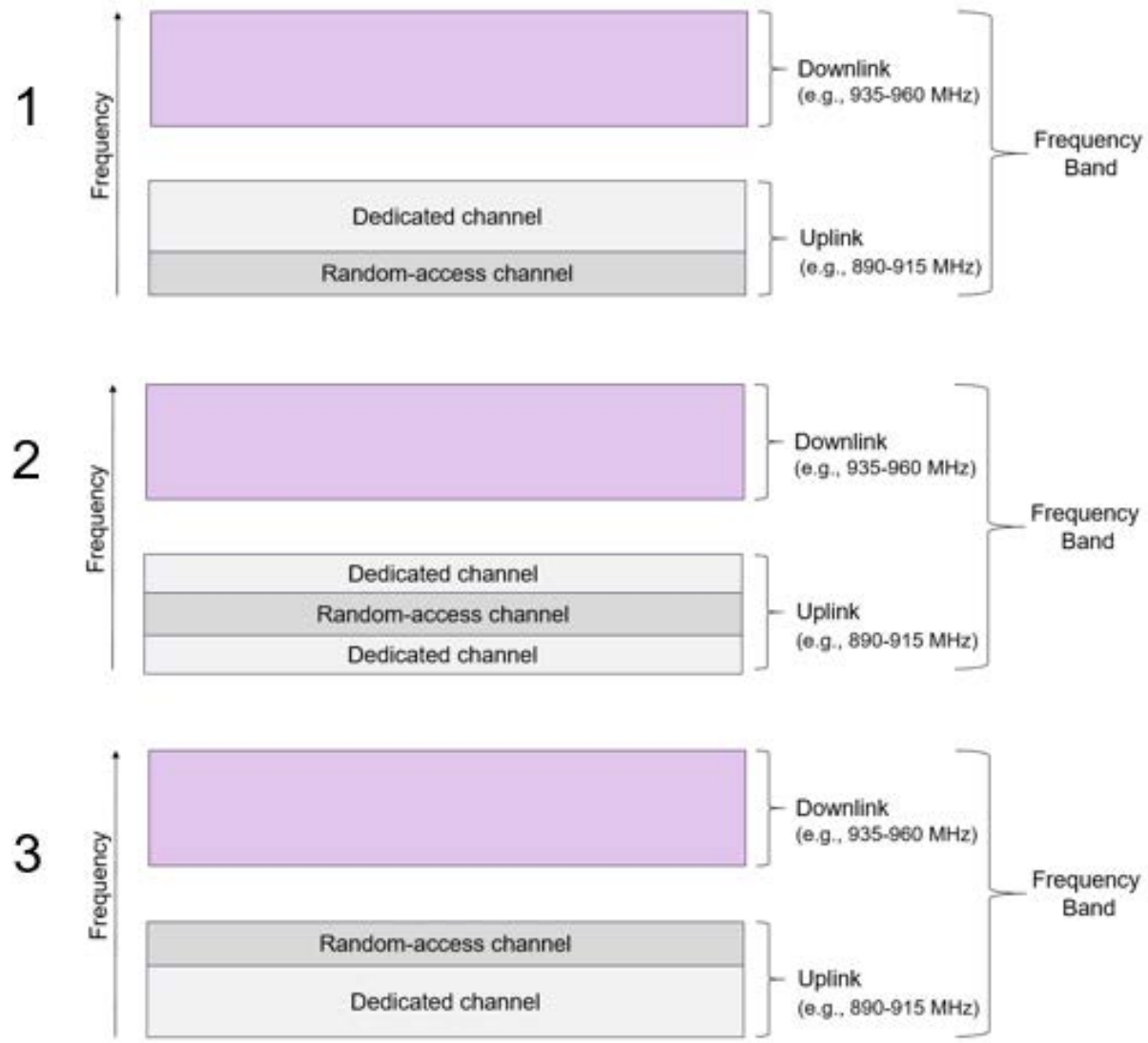

159. Each of these solutions would have been within a POSA's skill and would have yielded predictable results. Assigning the random-access channel to the higher-frequency portion of the uplink, as shown in solution (3) above, would have only required a POSA to perform routine configuration of standard telecommunications equipment and would have led to a predictable allocation of frequencies in the up-link.

160. A POSA also would have been motivated to use different frequency mappings for the random-access channels in different cells of a cellular network to avoid interference between the random-access channels of adjacent and nearby cells. A POSA would have understood and found obvious that the combined Kaiser-Gibson-Frank system is a cellular network comprising adjacent cells. *See* EX1007, 0003 (describing "adjacent cells operating in the same frequency band"); EX1008, 0406-22 (describing cell design principles). In cellular networks, avoiding interference among adjacent or nearby cells (often called "inter-cell interference"), including avoiding cochannel interference, was an important design consideration. *See* EX1008, 0415 ("Radio-frequency interference is one of the most important issues to be addressed in the design, operation, and maintenance of mobile communication systems."), 0416-18 (describing design principles to avoid adjacent channel interference and cochannel interference). As Gibson explains, "Cochannel interference arises from neighboring cells where the frequency channel is reused." EX1008, 0372. Gibson further explains that "[u]ndoubtedly the most critical of all interferences that can be engineered by the designer in cellular planning is cochannel interference. It arises in mobile radio systems using cellular architecture because of the frequency reuse philosophy." EX1008, 0416.

161. One solution that would have been known to POSAs to mitigate cochannel interference was to use different frequency mapping patterns in different

cells. For example, Kaiser suggests that, "[w]hen considering inter cell interference, it is of advantage that adjacent cells operating in the same frequency band use[] different frequency mapping patterns, so that the sub-carriers of a user only partly overlap with the sub-carriers used by a user of the adjacent cell." EX1007, 0003; *see also* EX1008, 0439 (describing fixed channel assignment in which "[e]ach cell is then assigned a fixed number of carriers, dependent on the traffic density and cell size"). A POSA would have understood and found obvious that Kaiser's suggestion would also apply to Gibson's separate, random-access channel in any given cell, and thus would have been motivated to use different frequency mappings for the random-access channels in different cells. For example, a POSA would have found it obvious to assign the random-access channel as shown in solution (3) above in one cell, and assign the random-access channel as shown in solution (1) in an adjacent cell to reduce or avoid cochannel interference in the random-access channels of adjacent cells. The cell applying solution (3) satisfies the limitations of claims 7, 17, and 27.

K. Dependent Claims 8, 18, and 28

8. *The mobile station of claim 1, wherein the random access signal is a spread spectrum signal.*
18. *The method of claim 11, wherein the random access signal is a spread spectrum signal.*
28. *The mobile station of claim 21, wherein the random access signal is a spread spectrum signal.*

162. Frank teaches or suggests that "*the random access signal is a spread spectrum signal*." Frank discloses that "each preamble of a random access request is modulated by a unique signature pattern," which "is spread with a known base station-unique spreading code." EX1009, 8:31-9:9; *see id*., 14:9-11 (referring to "the preamble's spreading code (that had been provided to the MS by the base station)"). Frank discloses that a "random access detector unit 202" at the base station "despread[s] the preamble part of the random access packet." EX1009, 14:9-14. Accordingly, a POSA would have understood that Frank's preamble ("*the random access signal*") is a "*spread spectrum signal*."

L. Dependent Claims 9, 19, and 29

9. *The mobile station of claim 1, wherein: the receiver is further configured to receive broadcast information from the base station, the broadcast information indicating at least one sequence associated with the base station for use in producing the random access signal.*

19. *The method of claim 11, further comprising: receiving broadcast information from the base station, the broadcast information indicating at least one sequence associated with the base station for use in producing the random access signal.*

29. *The mobile station of claim 21, wherein: the receiver circuit is further configured to receive broadcast information from the base station, the broadcast information indicating at least one sequence associated with the base station for use in producing the random access signal.*

163. Frank teaches or suggests that "*the receiver is further configured to receive broadcast information from the base station, the broadcast information indicating at least one sequence associated with the base station for use in producing the random access signal*."

164. As explained in Limitation 1.3, a POSA would have understood and found obvious that Frank's mobile station includes "*a receiver*." Section VIII.E.4. Frank discloses that mobile stations receive "a known base station-unique spreading code … via the base station's broadcast channel." EX1009, 9:5-9; *see also id.*, 14:9-11 (discussing "the preamble spreading code []that had been

provided to the [mobile station (MS)] by the base station[]"). Frank thus teaches or suggests a receiver "*configured to receive broadcast information from the base station*." As explained for Limitation 1.3, a POSA would have understood that Frank's base station-unique spreading code is a "*sequence associated with the base station*." Section VIII.E.4. Frank thus teaches or suggests that "*the broadcast information indicat[es] at least one sequence associated with the base station*."

165. Frank discloses that "[i]n order to distinguish between simultaneous random access requests being transmitted by different [mobile stations], each preamble of a random access request is modulated by a unique signature pattern," which "is spread with [the] known base station-unique spreading code." EX1009, 8:31-9:9. As explained in Limitation 1.3, a POSA would have understood that Frank's preamble is a "*random access signal*." Section VIII.E.4. Frank thus teaches or suggests that the "*at least one sequence associated with the base station*" (e.g., Frank's base station-unique spreading code) is "*for use in producing the random access signal*" (e.g., Frank's preamble).

M. Dependent Claims 10, 20, and 30

10. *The mobile station of claim 1, wherein the transmitter includes an OFDM transmitter signal processing circuit comprising: a serial to parallel converter, an inverse Fourier transform, and a cyclic prefix addition circuit; and the OFDM transmitter signal processing circuit outputs the first uplink signal.*
20. *The method of claim 11, wherein the first uplink signal is provided by an OFDM transmitter signal processing circuit comprising: a serial to parallel converter, an inverse Fourier transform, and a cyclic prefix addition circuit.*
30. *The mobile station of claim 21, wherein: the first type of transmitter signal processing circuit is an OFDM transmitter signal processing circuit comprising: a serial to parallel converter, an inverse Fourier transform, and a cyclic prefix addition circuit; and the OFDM transmitter signal processing circuit outputs the first uplink signal.*

166. Kaiser teaches or suggests that "*the transmitter includes [the first type of transmitter signal processing circuit is] an OFDM transmitter signal processing circuit comprising: a serial to parallel converter, an inverse Fourier transform, and a cyclic prefix addition circuit; and the OFDM transmitter signal processing circuit outputs the first uplink signal*."

167. Kaiser discloses a "*transmitter*" (below) comprising several components, including a "serial to parallel convert[er]" and an "OFDM unit." EX1007, 0002, FIG. 1 ("ser/par con" and "ODFM with user-specific frequency-

mapper"). A POSA would have understood and found obvious that (at least) Kaiser's serial-to-parallel converter and OFDM unit satisfy the "*OFDM transmitter signal processing circuit*" recited in claims 10, 20, and 30.

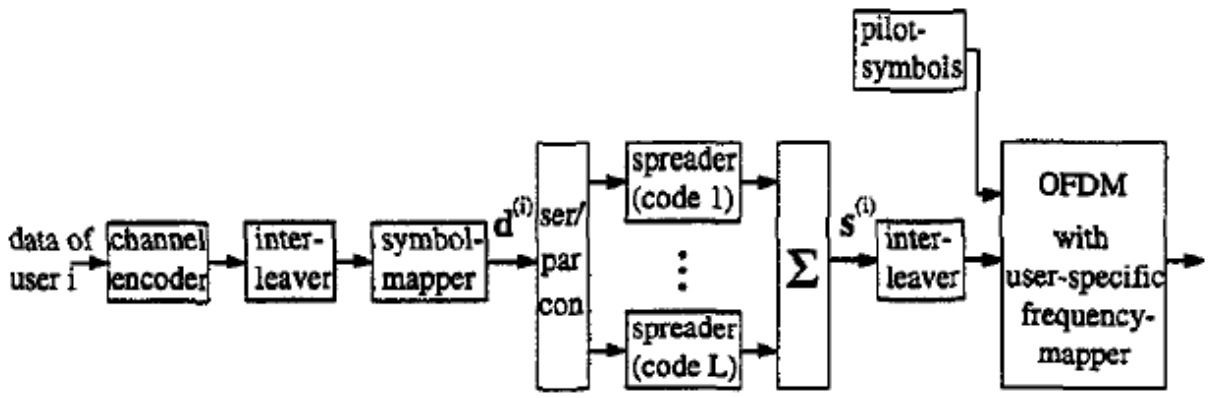

Figure 1: SS-MC-MA transmitter for the data of user i.

EX1007, 0002, FIG. 1.

168. Kaiser teaches or suggests that the "*OFDM transmitter signal processing circuit*" comprises "*a serial to parallel converter*." Kaiser discloses a "serial to parallel convert[er]." EX1007, 0002, FIG. 1 ("ser/par con").

169. Kaiser teaches or suggests that the "*OFDM transmitter signal processing circuit*" comprises "*an inverse Fourier transform*." Kaiser discloses that "the OFDM unit … performs a user-specific frequency mapping, illustrated in Fig. 2." EX1007, 0002, FIG. 2. Kaiser further disclose that "[t]he OFDM and inverse OFDM is realized by an IFFT and a FFT, respectively." EX1007, 0004. A

POSA would have understood that "IFFT" is an acronym for "inverse fast Fourier transform." *See* EX1008, 0309 ("inverse fast Fourier transform (IFFT)").

170. Kaiser teaches or suggests that the "*OFDM transmitter signal processing circuit*" comprises "*a cyclic prefix addition circuit*." Kaiser discloses that "each OFDM-symbol of duration T_s is cyclic extended by a guard interval Δ in the OFDM unit to prevent inter symbol interference (ISI) in multipath channels." EX1007, 0002. Accordingly, a POSA would have understood and found obvious that Kaiser's OFDM unit includes "*a cyclic prefix addition circuit*." Indeed, using a cyclic prefix, as described by Kaiser, was routine in OFDM systems by January 2004. *See* EX1008, 0133 ("After modulation, each block of *M* signals is cyclically extended by copying the last *L* signals in front of the block . . . .").

171. Kaiser teaches or suggests that "*the OFDM transmitter signal processing circuit outputs the first uplink signal*." *See* Section VIII.E.3 (addressing Limitation 1.2); *see also* EX1007, 0002 ("the OFDM unit . . . performs a user-specific frequency mapping"; "Each user of a cell transmits on a sub-set of sub-carriers . . . ."), 0003 ("The data transmission can be based on OFDM-frames . . . ."), 0004 ("In the OFDM unit 8 chips are modulated on 8 sub-carriers per OFDM-symbol . . . .").

IX. Ground 2: Claims 2-3, 5, 12-13, 15, 22-23, and 25 would have been obvious over Kaiser, Gibson, Frank, and Kanterakis.

172. Dependent claims 2-3, 5, 12-13, 15, 22-23, and 25 recite additional limitations with regard to "*the response message*." In the combined Kaiser-Gibson-Frank system, the "*response message*" corresponds to a message provided by the base station in immediate response to Frank's preamble ("*random access signal*") sent by the mobile station. *See* Section VIII.E.5. Frank's preamble contains a sequence that incorporates two codes: (1) a mobile station-specific "signature" that allows the base station to identify a particular mobile station's request from among multiple potential requests made simultaneously, EX1009, 8:31-9:6, 9:5-6, 14:16-18; and (2) a "base station-unique spreading code," used to spread the mobile station-specific signature prior to transmission, which allows the base station to detect that a random access request specifically intended for it (as opposed to a neighboring base station) has been received. EX1009, 9:6-9, 14:9-14. Under the further combination with Kanterakis, the entire data sequence contained in the preamble received by the base station, which includes identifiers of *both* the mobile station and the base station, would be incorporated as part of the base station's response message sent back to the mobile station, as I discuss below.

A. Kanterakis

173. Similar to the combined Kaiser-Gibson-Frank system, Kanterakis teaches a random-access preamble followed by a guard period that is used in a

channel allocation procedure based on the ALOHA protocol. EX1010, 1:12-21, 2:47-54, 7:24-26, 7:56-57, 8:53-65, FIG. 10. Kanterakis's random-access frame format is shown below:

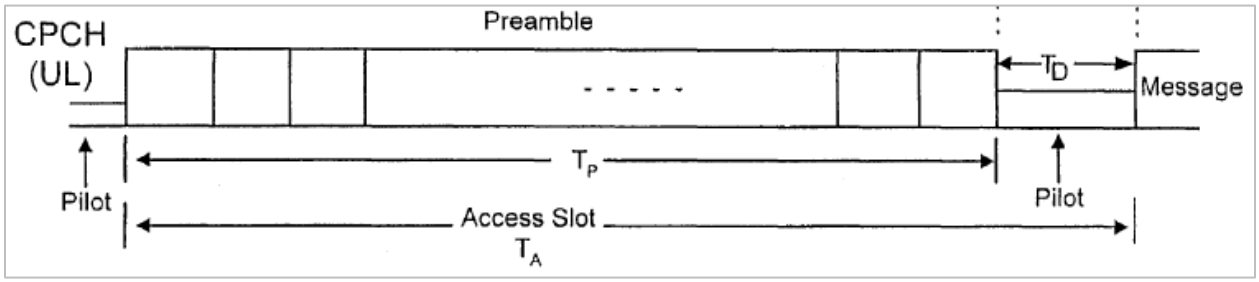

EX1010, FIG. 10 (reproduced-in-part).

174. As shown above, Kanterakis's random access frame format includes a preamble, followed by a time interval T_D, followed by a message data portion. EX1010, FIG. 10. Although Figure 10 of Kanterakis shows a "Pilot" signal being transmitted during time interval T_D, Kanterakis teaches that "[t]he pilot signal could be eliminated by setting it to a zero power level," EX1010, 7:56-57, thus creating a guard interval, like in Frank, following the preamble. *Compare* EX1010, 7:56-57, *with*, EX1009, FIG. 4.

175. Kanterakis also teaches, like Frank, that the mobile station's random access preamble can be a spread-spectrum signal obtained by "spreading an access preamble selected from a set of predefined preambles." EX1010, 17:28-29, 18:22-23; *compare* EX1010, 8:20-22 (using "orthogonal Gold codes), *with* EX1009,

10:1-5 (same). Kanterakis further describes the format of the base station's response, which, like Gibson, contains an "acknowledgement" or "ACK" signal:

> After the last transmitted preamble, the base station has successfully detected the transmission of the last transmitted preamble and transmits back the acknowledgment signal. During the same time, the remote station is tuned to receive the ACK signal. *The ACK signal transmitted corresponds to the specific preamble structure transmitted on the uplink*. Once the remote station detects the ACK signal corresponding to transmitted preamble by the remote station, the remote station begins transmission of its data.

EX1010, 8:54-62; *see also* EX1010, 6:10-15, 10:61-11:4, 18:1-4, 18:31-35. Kaiser explains that "[t]here is one acknowledgment message corresponding to each possible preamble signal." EX1010, 10:63-64. Kanterakis also discloses that the ACK signal includes "power control information" that the mobile station uses to "adjust its transmitted power." EX1010, 8:63-9:3.

B. Motivation to Combine

176. It would have been obvious to combine Kanterakis with Kaiser, Gibson, and Frank. As I explained with respect to claim 1, the combined Kaiser-Gibson-Frank system uses Gibson's access procedure, shown in Figure 17.3 of Gibson, for channel assignment. Section VIII.E. Gibson discloses that "[o]nce the base station has received the mobile's request, it responds with an immediate

assignment message that directs the mobile to tune to a dedicated control channel for the ensuing call setup." EX1008, 0319. Gibson, however, does not describe further details of the immediate assignment message ("*response message*"), which would have led a POSA to Kanterakis.

177. A POSA would have been motivated to include, in the base station's response message, the additional data suggested by Kanterakis because they provide the mobile station with useful information that facilitates progression into subsequent steps of Gibson's access procedure. As a POSA would have appreciated, including the full data sequence corresponding to the original preamble would allow a mobile station to recognize the response as a message that (1) originated from the same base station to which the random-access preamble was sent (as opposed to a base station of another cell), and (2) was specifically intended for the mobile station (as opposed to a different mobile station from the same cell). The power control information, in turn, allows the mobile station "to increase or decrease the transmitted power accordingly," EX1010, 8:63-9:3, further motivating the combination.

178. The combined system would have predictably resulted in a base station's response message to the mobile station's random access preamble signal that includes: (1) assignment information for a dedicated control channel, as disclosed by Gibson, *see* Gibson, 0319; and (2) the full data sequence contained in

the original preamble as well as power control information, as disclosed by Kanterakis, EX1010, 8:54-9:3, 10:63-66, 18:1-4, 18:31-35. And because this combination requires nothing more than the predictable use of prior art elements (e.g., certain data in Kanterakis' ACK message) according to their established functions, a POSA would have reasonably expected that the combination would succeed.

C. Dependent Claims 2, 12, and 22

2. *The mobile station of claim 1, wherein:*

the receiver is configured to determine if the response message identifies the sequence associated with the base station in the random access signal; and

on a condition that the response message identifies the sequence associated with the base station in the random access signal, the transmitter is configured to transmit a second uplink signal.

12. *The method claim 11, further comprising:*

determining if the response message identifies the sequence associated with the base station in the random access signal; and

on a condition that the response message identifies the sequence associated with the base station in the random access signal, transmitting a second uplink signal.

22. *The mobile station of claim 21, wherein:*

the receiver circuit is configured to determine if the response message identifies the sequence associated with the base station in the random access signal; and

on a condition that the response message identifies the sequence associated with the base station in the random access signal, the first type of transmitter signal processing circuit is configured to transmit a second uplink signal.

179. The Kaiser-Gibson-Frank-Kanterakis combination renders obvious "*determining if the response message identifies the sequence associated with the base station in the random access signal; and on a condition that the response message identifies the sequence associated with the base station in the random access signal, transmitting a second uplink signal*."

180. Kanterakis teaches that detection by the mobile station of an acknowledgement "corresponding to transmitted preamble" triggers its subsequent transmission of additional data. EX1010, 8:54-62; *see also* EX1010, 10:61-11:4, 18:1-4, 18:31-35. A POSA would have found it obvious that this would involve analysis of the *full data sequence* of the received acknowledgement for correspondence with the original preamble. Again, in Kanterakis, there is a one-to-one match between a given acknowledgement and original preamble. EX1010, 10:63-66.

181. And because in the combined system, the original preamble would include a "*sequence associated with the base station*," EX1009, 9:6-9, 14:9-14, the further combination with Kanterakis renders obvious "*determining if the response message identifies the sequence associated with the base station in the random access signal*." In Kanterakis, as just explained, it would have been obvious that the mobile station would analyze the *full data sequence* of the received acknowledgement for correspondence with the original preamble, EX1010, 8:54-

62, 18:1-4, 18:31-35, which would include identifying the same "*sequence associated with the base station*," originally sent with the preamble (as taught by Frank), within the received acknowledgement. And "*on [the] condition that the response message identifies*" the full data sequence originally sent with the preamble—including "*the sequence associated with the base station*," transmission of additional data by the mobile station is triggered. EX1010, 8:54-62, 18:1-4, 18:31-35. In the context of the underlying Ground 1 combination, the additional data transmitted by the mobile station ("*second uplink signal*") takes the form of setup information communicated over a dedicated control channel. EX1008, 0319-20, FIG. 17.3.

D. Dependent Claims 3, 13, and 23

3. *The mobile station of claim 2, wherein the response message includes power adjustment information and wherein the transmitter is configured to transmit the second uplink signal according to the power adjustment information.*

13. *The method of claim 12, wherein the response message includes power adjustment information and wherein the second uplink signal is transmitted according to the power adjustment information.*

23. *The mobile station of claim 22, wherein the response message includes power adjustment information and wherein the first type of transmitter signal processing circuit is configured to transmit the second uplink signal according to the power adjustment information.*

182. The Kaiser-Gibson-Frank-Kanterakis combination renders obvious "*wherein the response message includes power adjustment information and wherein the transmitter is configured to transmit the second uplink signal according to the power adjustment information*."

183. Kanterakis teaches or suggests that, in addition to incorporating an ACK signal, the base station's response message can also include associated power control information, which is then used by the mobile station to adjust its transmission power upon restarting data transmission after time interval T_D:

> Corresponding with the preamble structure in the uplink there is a corresponding in time power control information symbol….

> *Upon start of data transmission the remote station uses the downlink transmitted power control information to adjust its transmitted power.* The power control symbols are decoded to derive binary decision data, which is then used to increase or decrease the transmitted power accordingly.

EX1010, 8:63-9:3; *see also id.*, FIG. 10 (showing "PC1, PN2… PCN" being sent in the same down-link timeslot as "ACK").

E. Dependent Claims 5, 15, and 25

5. *The mobile station of claim 1, wherein the response message includes a mobile station identifier assigned to the mobile station.*
15. *The method of claim 11, wherein the response message includes a mobile station identifier assigned to the mobile station.*
25. *The mobile station of claim 21, wherein the response message includes a mobile station identifier assigned to the mobile station.*

184. The Kaiser-Gibson-Frank-Kanterakis combination renders obvious "*wherein the response message includes a mobile station identifier assigned to the mobile station.*" Because Kanterakis's "ACK" signal "*corresponds to* the *specific* preamble structure" originally sent by the mobile station, and which is then capable of being detected by the mobile station as a signal "*corresponding to* [the] transmitted preamble," EX1010, 8:58-62, a POSA would have found it obvious that the "ACK" signal would include the same data sequence originally transmitted in the preamble. Kanterakis teaches or suggests there should be a precise one-to-

one correspondence between the acknowledgement message and original preamble. EX1010, 10:63-66; *see also id*., 18:1-4, 18:31-35. Accordingly, because the originally transmitted preamble would "*include[] a mobile station identifier assigned to the mobile station*" based on the preamble structure from Frank, EX1009, 8:31-9:2, 9:5-6, 14:16-18, it would have been obvious that the response message (as modified by Kanterakis) would likewise "*include[] a mobile station identifier assigned to the mobile station*." A POSA would have understood and found obvious that when Frank's mobile station selects a unique signature pattern, the mobile station assigns to itself, at least temporarily, a unique signature pattern that identifies the mobile station.

185. Alternatively, it would have been obvious to a POSA to include in the base station's response message a mobile station identifier of the mobile station to which the base station transmitted the response message so that the mobile station could identify the acknowledgement message intended for it and successfully continue the channel allocation procedure. Again, fast and efficient random-access was an important design consideration to avoid collisions and access failures in the random-access channel. *See* EX1009, 1:18-28. Including a mobile station identifier in the base station's response message (acknowledgment message) would allow the mobile station to quickly recognize that the acknowledge message was intended for

it, and then tune to the appropriate dedicated control channel, per Gibson's channel-assignment procedure shown in Figure 17.3.

X. CONCLUSION

186. In signing this declaration, I recognize that the declaration will be filed as evidence in a contested case before the Patent Trial and Appeal Board of the United States Patent and Trademark Office. I also recognize that I may be subject to cross-examination in the case and that cross-examination will take place within the United States. If cross-examination is required of me, I will appear for cross-examination within the United States during the time allotted for cross-examination.

187. I hereby declare that all statements made herein of my own knowledge are true and that all statements made on information and belief are believed to be true; and further that these statements were made with the knowledge that willful false statements and the like so made are punishable by fine or imprisonment, or both, under Section 1001 of Title 18 of the United States Code.

Executed this 27 day of October, 2022.

Respectfully submitted,

Leonard J. Cimini, Jr., Ph.D.