UNITED STATES PATENT AND TRADEMARK OFFICE

BEFORE THE PATENT TRIAL AND APPEAL BOARD

DELL INC. and DELL TECHNOLOGIES INC.,
Petitioner,

v.

NEO WIRELESS LLC,
Patent Owner.

IPR2022-00277
Patent 10,833,908 B2

Before CHARLES J. BOUDREAU, MICHELLE N. ANKENBRAND, and MATTHEW S. MEYERS, *Administrative Patent Judges.*

MEYERS, *Administrative Patent Judge*.

DECISION
Denying Institution of *Inter Partes* Review
35 U.S.C. § 314

HONDA 1020

I. INTRODUCTION

A. Background and Summary

Dell Inc. and Dell Technologies, Inc. (collectively, "Petitioner") filed a Petition to institute an *inter partes* review of claims 1–6, 8–16, 18–26, and 28–30 (the "challenged claims") of U.S. Patent 10,833,908 B2 (Ex. 1001, the "'908 patent"). Paper 3 ("Petition" or "Pet."). Neo Wireless LLC ("Patent Owner") filed a Preliminary Response. Paper 9 ("Preliminary Response" or "Prelim. Resp.").

An *inter partes* review may not be instituted "unless . . . the information presented in the petition . . . shows that there is a reasonable likelihood that the petitioner would prevail with respect to at least 1 of the claims challenged in the petition." 35 U.S.C. § 314(a) (2018). We have authority, acting on the designation of the Director, to determine whether to institute an *inter partes* review under 35 U.S.C. § 314 and 37 C.F.R. § 42.4(a). Having considered the arguments and evidence presented by Petitioner and Patent Owner, we determine that Petitioner has not demonstrated a reasonable likelihood of prevailing on at least one of the challenged claims of the '908 patent. Accordingly, we do not institute an *inter partes* review of the challenged claims.

B. Real Parties in Interest

The parties identify themselves as the real parties in interest. Pet. 103; Paper 5, 1.

C. Related Proceedings

The parties identify, as a matter involving or related to the '908 patent, *Neo Wireless LLC v. Dell Technologies Inc.*, Case No. 6:21-cv-0024 (W.D. Tex.). Pet. 103; Paper 5, 1. Patent Owner also identifies as related

matters two former district court proceedings involving the ’908 patent and three proceedings before the Board involving the same parties: IPR2021-01468, IPR2021-01480, and IPR2021-01486. Paper 5, 1–2.

D. The ’908 Patent

The ’908 patent is titled “Channel Probing Signal for a Broadband Communication System.” Ex. 1001, code (54). The ’908 patent explains that “[a] direct Sequence Spread Spectrum (DSSS) system is inherently capable of supporting multi-cell and multi-user access applications through the use of orthogonal spreading codes,” but notes that “a DSSS system using orthogonal spreading codes, may suffer severely from the loss of orthogonally in a broadband environment due to multi-path propagation effects, which results in low spectral efficiency.” *Id.* at 1:32–35, 1:38–42. The ’908 patent also explains that a Multi-Carrier (“MC”) “system such as an Orthogonal Frequency Division Multiplexing (OFDM) system is capable of supporting broadband applications with higher spectral efficiency” and “mitigates the adverse effects of multi-path propagation in wireless environments by using cyclic prefixes to extend the signal period as the data is multiplexed on orthogonal sub-carriers.” *Id.* at 1:45–51. The ’908 patent states, however, that “MC systems are vulnerable while operating in multi-user and multi-cell environments.” *Id.* at 1:56–58.

In view of the above, the ’908 patent sets forth “[a] broadband wireless communication system where both the Multi-Carrier (MC) and direct Sequence Spread Spectrum (DSSS) signals are intentionally overlaid together in both time and frequency domains.” Ex. 1001, 2:42–45. The ’908 patent explains that “[t]he MC signal is used to carry broadband data signal for its high spectral efficiency, while the DSSS signal is used for

special purpose processing, such as initial random access, channel probing, and short messaging." *Id.* at 2:47–51.

The '908 patent describes an embodiment in which "a DSSS signal and a MC signal [are] fully overlaid or partially overlaid with an MC symbol or slot boundary in the time domain." Ex. 1001, 7:45–47. Figure 13 of the '908 patent is reproduced below.

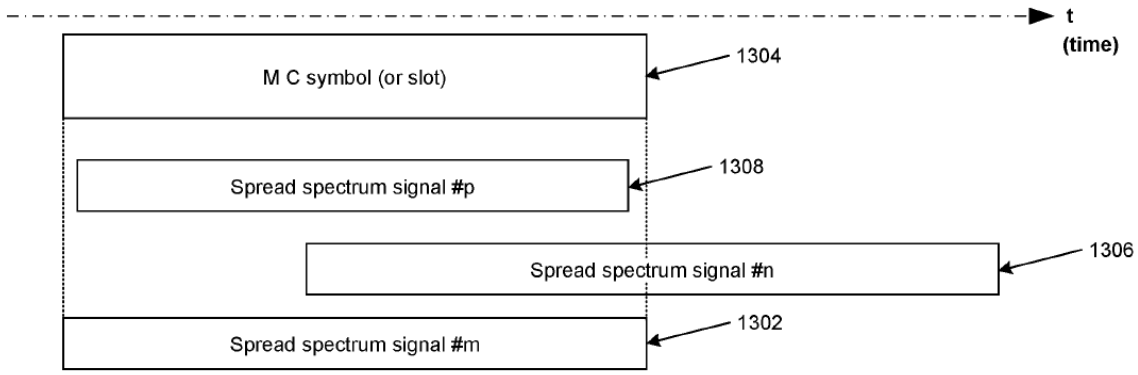

FIG. 13

Figure 13 shows DSSS signal 1302 that fully overlaps with MC symbol 1304 in the time domain and DSSS signal 1306 that overlaps with MC symbol 1304 only partially. *Id.* at 7:47–53. The '908 patent further describes an embodiment in which guard periods are added to DSSS signal 1308 to "ensure that a well-designed DSSS sequence (with low PAR in frequency domain) causes little interference with the MC subcarriers even when there is time misalignment in a DSSS signal relative to the OFDM symbol period." *Id.* at 8:7–11.

The '908 patent also describes using spectrum nulls in a DSSS signal to protect an MC control subchannel. Ex. 1001, 8:15–16. Figure 15 of the '908 patent is reproduced below.

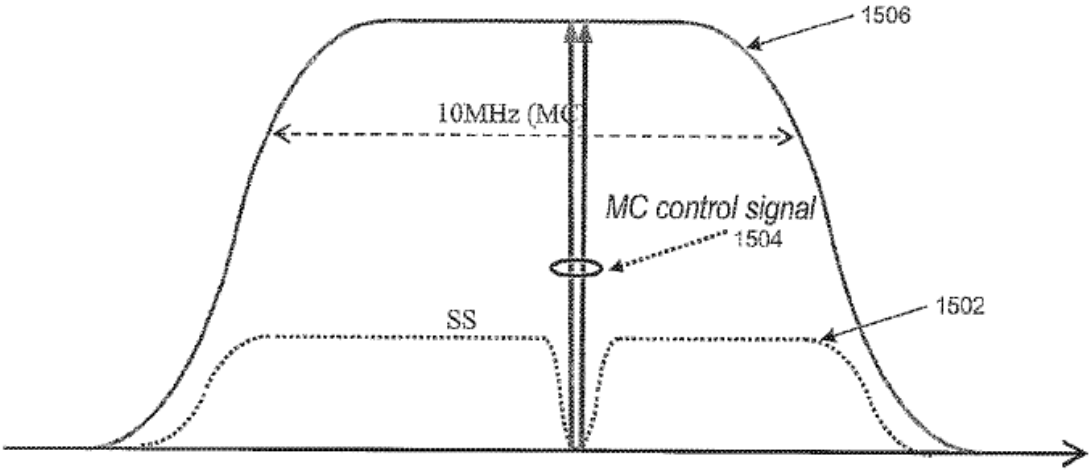

FIG. 15

Figure 15 depicts an available spectrum 1506 and DSSS signal 1502 that has a spectrum null to avoid excess interference with uplink MC control signal 1504. *Id.* at 8:16–20. The ’908 patent explains that “interference with the MC sub-carriers over the rest of the spectrum will be much lower where the MC subchannels, carrying control information or using higher modulation subcarriers, are placed.” *Id.* at 8:25–29.

The ’908 patent describes an embodiment in which a mobile station is transmitting an initial access DSSS signal to a base station. Ex. 1001, 8:37–44. The ’908 patent explains that the mobile station “sends an initial random access signal over the DSSS channel with a certain signature code or sequence that is designated to the corresponding base station and is broadcasted to all the mobile stations by each base station.” *Id.* at 8:49–55. The ’908 patent states that “[a] sufficient guard period is reserved in the DSSS signal to account for initial time alignment uncertainty.” *Id.* at 8:60–62. According to the ’908 patent, “[i]f the base station successfully detects the DSSS signal, it sends the acknowledgement (ACK) carrying information such as a signature or other unique mobile station identifier and

power and time adjustments of the mobile on the downlink control channel in the next available timeslot" and the mobile station then moves to a designated uplink MC control channel and uses assigned time and power values. *Id.* at 8:63–9:4.

E. Illustrative Claim

Petitioner challenges claims 1–6, 8–16, 18–26, and 28–30 of the '908 patent. Pet. 1. Claims 1, 11, and 21 are the independent challenged claims. Claim 1, reproduced below with Petitioner's bracketing, labels, and formatting, is representative.

> 1. [1pre-1] A mobile station comprising,
>
> [1a] a transmitter configured to: transmit, to a base station, a first uplink signal within a frequency band, wherein the first uplink signal is an orthogonal frequency division multiplexing (OFDM) signal
>
> [1b] and utilizes a frame format comprising a plurality of timeslots, each timeslot comprising a plurality of OFDM symbols;
>
> [1c] transmit, to the base station, a random access signal followed by a guard period in only a portion of the frequency band,
>
> [1d] wherein the random access signal includes a sequence associated with the base station,
>
> [1e] wherein a time duration of a combination of the random access signal and the guard period is greater than a time duration of at least one of the plurality of OFDM symbols; and
>
> [1f] a receiver configured to receive, from the base station, a response message.

Ex. 1001, 11:8–25; Pet vi.

F. Prior Art and Asserted Grounds

Petitioner asserts that claims 1–6, 8–16, 18–26, and 28–30 of the '908 patent are unpatentable on the following grounds:

Claims Challenged	35 U.S.C. §	References
1–6, 8–16, 18–26, 28–30	103(a)[1]	Ma,[2] TR[3]
10, 20, 30	103(a)	Ma, TR, Jung[4]
1–6, 8–16, 18–26, 28–30	102(e)/103(a)	Walton[5]
10, 20, 30	103(a)	Walton, Jung

Pet. 1–2. Petitioner also relies on the Declaration of Dr. Matthew Valenti (Ex. 1003) in support of its arguments. Patent Owner relies on the Declaration of William P. Alberth Jr. (Ex. 2001) in support of its arguments.

II. ANALYSIS

A. Legal Standards

"In an [*inter partes* review], the petitioner has the burden from the onset to show with particularity why the patent it challenges is unpatentable." *Harmonic Inc. v. Avid Tech., Inc.*, 815 F.3d 1356, 1363 (Fed. Cir. 2016) (citing 35 U.S.C. § 312(a)(3) (2012) (requiring *inter partes* review petitions to identify "with particularity . . . the evidence that supports the grounds for the challenge to each claim")). This burden of persuasion never shifts to the patent owner. *See Dynamic Drinkware, LLC v. Nat'l*

[1] The Leahy-Smith America Invents Act, Pub. L. No. 112-29, 125 Stat. 284 (2011) ("AIA"), amended 35 U.S.C. §§ 102 and 103. Because the '908 patent is alleged to have an effective filing date before the effective date of the applicable AIA amendments, we refer to the pre-AIA version of 35 U.S.C. §§ 102 and 103.
[2] US Pub. No. 2004/0001429 A1, published Jan. 1, 2004 (Ex. 1005).
[3] *Universal Mobile Telecommunications System (UMTS); UMTS Terrestrial Radio Access (UTRA); Concept evaluation (UMTS 30.06 version 3.0.0)*, TR 101 146 V3.0.0, European Telecommunications Standards Institute (December 1997) (Ex. 1006).
[4] US Pub. No. 2004/0114504 A1, published June 17, 2004 (Ex. 1010).
[5] US Pub. No. 2004/0082356 A1, published Apr. 29, 2004 (Ex. 1013, "Walton").

Graphics, Inc., 800 F.3d 1375, 1378 (Fed. Cir. 2015) (discussing the burden of proof in *inter partes* review).

"To anticipate, the reference must not only disclose all elements of the claim within the four corners of the document, but must also disclose those elements arranged as in the claim." *Sanofi-Synthelabo v. Apotex, Inc.*, 550 F.3d 1075, 1083 (Fed. Cir. 2008) (internal quotation omitted). In other words, it is not enough to be able to find all of the pieces of the claimed invention somewhere in a prior art reference; rather, those elements must be set out in the prior art reference in the same way they are in the claimed invention. *Net MoneyIN, Inc. v. VeriSign, Inc.*, 545 F.3d 1359, 1369 (Fed. Cir. 2008) ("Because the hallmark of anticipation is prior invention, the prior art reference—in order to anticipate under 35 U.S.C. § 102—must not only disclose all elements of the claim within the four corners of the document, but must also disclose those elements 'arranged as in the claim.'") (quoting *Connell v. Sears, Roebuck & Co.*, 722 F.2d 1542, 1548 (Fed. Cir. 1983)).

A claim is unpatentable for obviousness if, to one of ordinary skill in the pertinent art, "the differences between the subject matter sought to be patented and the prior art are such that the subject matter as a whole would have been obvious at the time the invention was made." *KSR Int'l Co. v. Teleflex Inc.*, 550 U.S. 398, 406 (2007) (quoting 35 U.S.C. § 103(a)). The question of obviousness is resolved on the basis of underlying factual determinations, including "the scope and content of the prior art"; "differences between the prior art and the claims at issue"; and "the level of

ordinary skill in the pertinent art."[6] *Graham v. John Deere Co.*, 383 U.S. 1, 17–18 (1966).

A patent claim "is not proved obvious merely by demonstrating that each of its elements was, independently, known in the prior art." *KSR*, 550 U.S. at 418. An obviousness determination requires finding "both 'that a skilled artisan would have been motivated to combine the teachings of the prior art references to achieve the claimed invention, and that the skilled artisan would have had a reasonable expectation of success in doing so.'" *Intelligent Bio-Sys., Inc. v. Illumina Cambridge Ltd.*, 821 F.3d 1359, 1367–68 (Fed. Cir. 2016) (citation omitted); *see KSR*, 550 U.S. at 418 (for an obviousness analysis, "it can be important to identify a reason that would have prompted a person of ordinary skill in the relevant field to combine the elements in the way the claimed new invention does").

"Although the *KSR* test is flexible, the Board 'must still be careful not to allow hindsight reconstruction of references . . . without any explanation as to *how* or *why* the references would be combined to produce the claimed invention.'" *TriVascular, Inc. v. Samuels*, 812 F.3d 1056, 1066 (Fed. Cir. 2016) (citation omitted). Further, an assertion of obviousness "cannot be sustained by mere conclusory statements; instead, there must be some articulated reasoning with some rational underpinning to support the legal conclusion of obviousness." *KSR*, 550 U.S. at 418 (quoting *In re Kahn*, 441

[6] Additionally, objective indicia, such as "commercial success, long felt but unsolved needs, failure of others, etc., might be utilized to give light to the circumstances surrounding the origin of the subject matter sought to be patented. As indicia of obviousness or nonobviousness, these inquiries may have relevancy." *Graham*, 383 U.S. at 17–18. Neither party, however, has presented any such evidence for us to consider.

F.3d 977, 988 (Fed. Cir. 2006)); *accord In re NuVasive, Inc.*, 842 F.3d 1376, 1383 (Fed. Cir. 2016) (stating that "'conclusory statements'" amount to an "insufficient articulation[] of motivation to combine"; "instead, the finding must be supported by a 'reasoned explanation'" (citation omitted)); *In re Magnum Oil Tools Int'l, Ltd.*, 829 F.3d 1364, 1380 (Fed. Cir. 2016) ("To satisfy its burden of proving obviousness, a petitioner cannot employ mere conclusory statements. The petitioner must instead articulate specific reasoning, based on evidence of record, to support the legal conclusion of obviousness.").

We analyze the challenges presented in the Petition in accordance with the above-stated principles.

B. Level of Ordinary Skill in the Art

In determining the level of ordinary skill in the art, various factors may be considered, including the "type of problems encountered in the art; prior art solutions to those problems; rapidity with which innovations are made; sophistication of the technology; and educational level of active workers in the field." *In re GPAC Inc.*, 57 F.3d 1573, 1579 (Fed. Cir. 1995) (internal quotation marks and citation omitted).

Petitioner asserts that at the time of the invention a person of ordinary skill in the art ("POSITA") "would have had at least a Bachelor's degree in an academic area emphasizing electrical engineering or a similar discipline, and at least two years of experience in the field working with, teaching, or researching wireless communication networks" and that "[s]uperior education could compensate for a deficiency in work experience, and *vice-versa*." Pet. 4–5 (citing Ex. 1003 ¶¶ 23–24).

Patent Owner does not provide its own assessment regarding the level of skill in the art, or otherwise dispute Petitioner's assertion. *See generally* Prelim. Resp.; *see also* Ex. 2001 ¶ 23 (Patent Owner's expert "accept[s] Dr. Valenti's proposed qualifications of a POSITA.").

Based on our review of the record at this stage, we find that Petitioner's proposal is consistent with the level of skill reflected in the prior art references of record. *See Daiichi Sankyo Co. v. Apotex, Inc.*, 501 F.3d 1254, 1256 (Fed. Cir. 2007) (listing the type of problems encountered in the art, prior art solutions to those problems, and the sophistication of the technology as factors that may be considered in determining the level of ordinary skill in the art). The prior art itself may be sufficient to demonstrate the level of skill in the art at the time of the invention. *See Okajima v. Bourdeau*, 261 F.3d 1350, 1355 (Fed. Cir. 2001) (explaining that specific findings regarding ordinary skill level are not required "where the prior art itself reflects an appropriate level and a need for testimony is not shown") (quoting *Litton Indus. Prods., Inc. v. Solid State Sys. Corp.*, 755 F.2d 158, 163 (Fed. Cir. 1985)).

Accordingly, for purposes of this decision, we apply Petitioner's description of the person of ordinary skill in the art.

C. Claim Construction

In an *inter partes* review proceeding for a petition filed on or after November 13, 2018, a patent claim shall be construed using the same claim construction standard that would be used to construe the claim in a civil action under 35 U.S.C. § 282(b). 37 C.F.R. § 42.100(b).[7] This rule adopts

[7] The Petition in this case was accorded a filing date of December 14, 2021. *See* Paper 4, 1.

the same claim construction standard used by Article III federal courts, which follow *Phillips v. AWH Corp.*, 415 F.3d 1303 (Fed. Cir. 2005) (en banc), and its progeny.

Under that standard, the words of a claim are generally given their "ordinary and customary meaning," which is the meaning the term would have to a person of ordinary skill at the time of the invention, in the context of the entire patent including the specification. *See Phillips*, 415 F.3d at 1312–13. "In determining the meaning of the disputed claim limitation, we look principally to the intrinsic evidence of record, examining the claim language itself, the written description, and the prosecution history, if in evidence." *DePuy Spine, Inc. v. Medtronic Sofamor Danek, Inc.*, 469 F.3d 1005, 1014 (Fed. Cir. 2006) (citing *Phillips*, 415 F.3d at 1312–17).

Petitioner submits that "[n]o formal claim constructions are necessary because 'claim terms need only be construed to the extent necessary to resolve the controversy.'" Pet. 5 (citing *Wellman, Inc. v. Eastman Chem. Co.*, 642 F.3d 1355, 1361 (Fed. Cir. 2011)). Patent Owner also does not propose any terms for construction. *See generally* Prelim. Resp.

We determine that no terms require explicit construction to reach a decision on institution. *See Nidec Motor Corp. v. Zhongshan Broad Ocean Motor Co.*, 868 F.3d 1013, 1017 (Fed. Cir. 2017) (per curiam) (claim terms need to be construed "only to the extent necessary to resolve the controversy" (quoting *Vivid Techs., Inc. v. Am. Sci. & Eng'g, Inc.*, 200 F.3d 795, 803 (Fed. Cir. 1999))).

D. Alleged Obviousness over Ma and TR

Petitioner asserts that claims 1–6, 8–16, 18–26, and 28–30 are unpatentable as obvious over Ma and TR. Pet. 10–54. Petitioner also relies

on the testimony of Dr. Valenti to support its arguments. *Id*. (citing Ex. 1003). Patent Owner responds to Petitioner's assertions. Prelim. Resp. 3–28. We provide a brief overview of the references before turning to the parties' arguments.

1. Overview of Ma (Ex. 1005)

Ma describes "a new uplink OFDM protocol" for a wireless terminal and a network terminal. Ex. 1005, code (57). The protocol includes "a low rate mode OFDM transmission in a first frequency band of the OFDM band; and a second transmit chain for generating and transmitting a burst-mode transmission in a second frequency band of the OFDM band." *Id.* Figure 2 of Ma is reproduced below.

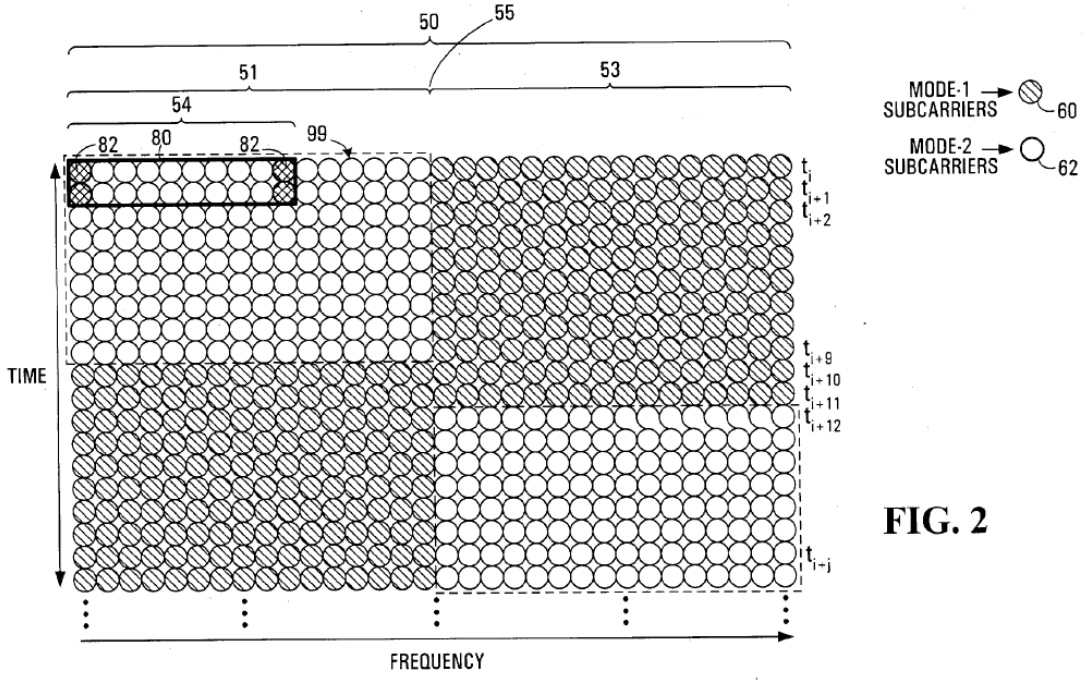

FIG. 2

Figure 2 illustrates an exemplary time-frequency resource allocation within a common wireless channel according to an orthogonal frequency division multiple-access ("OFDMA") scheme. Ex. 1005 ¶ 94. Ma identifies that "OFDM is a method of digital modulation in which a set of data is mapped

onto the set of OFDM sub-carriers." *Id.* ¶ 122. Ma explains that each circle in Figure 2 "represents the transmission of a single sub-carrier during a single OFDM symbol transmission period," with Figure 2's horizontal axis representing frequency and the vertical axis representing time. *Id.*

Ma describes the exemplary OFDMA scheme as including common wireless channel 50, which is implemented via an OFDM transmission scheme within an overall OFDM band that is divided into two frequency bands 51, 53. *Id.* ¶ 124. Ma explains that frequency bands 51, 53 can be used interchangeably to provide two different OFDMA modes, Mode-1 and Mode-2. *Id.* Sub-carriers 60 are used for Mode-1 and sub-carriers 62 are used for Mode-2 in Figure 2. *Id.* Ma describes first frequency band 51 has the first sixteen sub-carriers of OFDM band 50 and second frequency band 53 has the second sixteen sub-carriers of OFDM band 50. *Id.* According to Ma, "Mode-1 is used to provide low rate circuit oriented connectivity for multiple users simultaneously preferably using orthogonal code separation, while Mode-2 is used to provide higher rate bursty packet connectivity." *Id.* Ma further describes Mode-1 as supporting "the provision of user dedicated channels with fixed data rate to support real-time service, uplink signaling and simple messaging," whereas "Mode-2 supports the transmission of high speed data bursts." *Id.* ¶ 143.

Ma also describes a Random Access Channel ("RACH") that User Equipment ("UE") new to a wireless network uses to access a system. Ex. 1005 ¶ 205. Ma describes an embodiment in which a RACH is overlaid atop common wireless channel 50 or over one of bands 51, 53. *Id.* ¶ 206. Ma explains that the RACH is therefore "transmitted simultaneously both in time and frequency with the transmission of the other Mode-1 signals by

other users" and thus the RACH is "a form of interference to the other users." *Id.* ¶ 206.

In addition, Ma describes a procedure for UE to initiate a connection with a network. Ex. 1005 ¶ 234. The procedure includes synchronizing the UE to a base station for timing and frequency and the UE listening to a downlink ("DL") signaling channel for information identifying RACH pseudo-noise ("PN") codes. *Id.* ¶¶ 235–236. The UE then "measures the DL long term [carrier-to-interference (C/I) ratio]," sends a RACH code chosen randomly from the base station's code set, and then determines the transmit power "inversely proportional to the DL long term C/I measurement." *Id.* ¶¶ 237–238. Ma explains that "[i]f the base station detects the RACH code successfully it measures the time offset of that UE and then sends the initial dedicated uplink access channel grant, together with the RACH code index as well as the time offset information." *Id.* ¶ 239. According to Ma, the "UE adjusts its timing and sends back its ID, its [channel quality information (CQI)] report information, and uplink traffic load request if it wants to start uplink data transmission." *Id.* ¶ 240.

2. Overview of TR (Ex. 1006)

TR is a technical report that "describes the detailed evaluation work towards the definition of the Universal Mobile Telecommunications System UMTS Terrestrial Radio Access (UTRA) within [Special Mobile Group 2 (SMG2)]." Ex. 1006, 5. TR describes time and frequency synchronization for an OFDMA system, which includes both downlink and uplink synchronization. *Id.* at 196–197, 204–206. TR explains that "[a]fter the mobile [station] has detected the basestation['']s timing it sends an RACH to the basestation" and the basestation "measures the time offset for the

received RACH and sends back the necessary timing advance to the [mobile station (MS)] (very similar to [Global System for Mobile Communications (GSM)])." *Id.* at 206.

Figure 6 of TR is reproduced below.

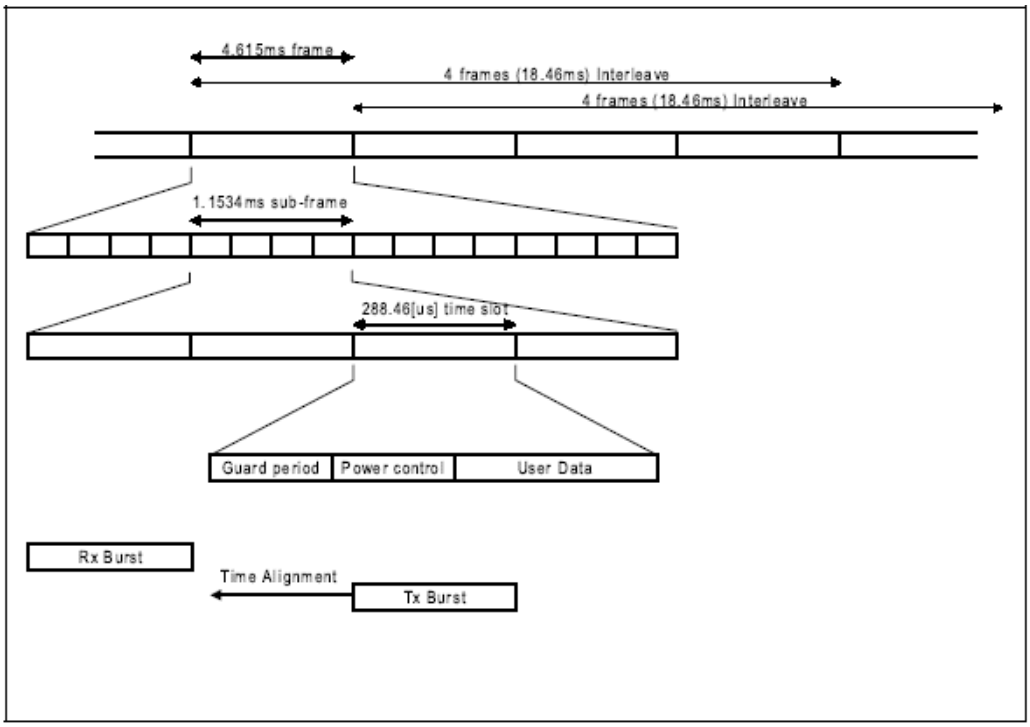

Figure 6: Frame (TDMA) Structure

Figure 6 depicts a time-division multiple access ("TDMA") frame structure. Ex. 1006, 198. TR describes the TDMA frame structure as including frames having a length of 4.615 ms that are divided into 4 sub-frames having a 1.1534 ms length. *Id.* A sub-frame in turn includes four time slots that are 288.46 µs in length. *Id.* TR describes a time slot as including a guard period, power control information, and data. *Id.*

TR's Figure 7, which we reproduce below, shows the shape of the modulation unit. Ex. 1006, 199.

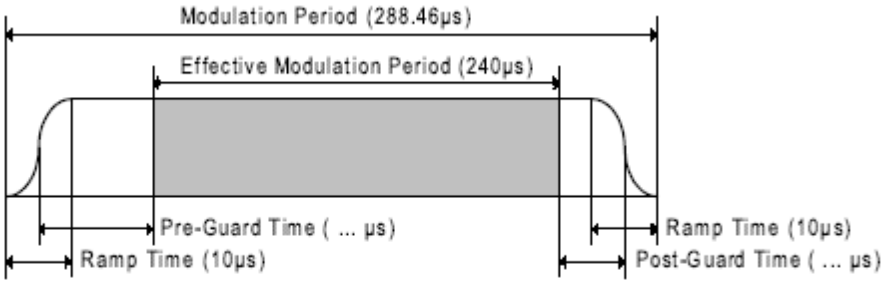

Figure 7: OFDM Modulation Burst

Figure 7 depicts an OFDM modulation burst. TR explains that "[t]he whole system frequency band is divided into small blocks (bandslots) with a fixed number of subcarriers." Ex. 1006, 199. TR shows several bandslots in Figure 8, which we reproduce below.

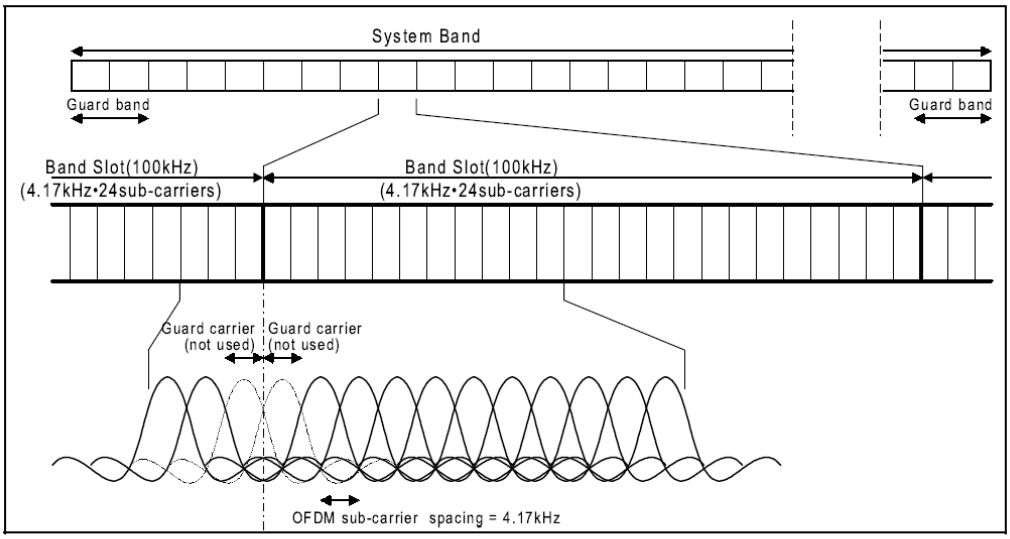

Figure 8: BDMA Frequency Structure

TR's Figure 8 shows individual bandslots having guard carriers at each end of the bandslot. Ex. 1006, 199. TR explains that "[i]n each bandslot the two subcarriers at the edge of the bandslot are left unmodulated to relax receiver blocking requirements." *Id.*

3. Analysis of Claim 1

Petitioner asserts claim 1 would have been obvious over Ma and TR. Pet. 5–28. We use Petitioner's notations to identify the claim elements, and focus on the dispositive claim limitation, 1[c].

a) [1c] transmit, to the base station, a random access signal followed by a guard period in only a portion of the frequency band,

(1) Petitioner's Contentions

Petitioner asserts that the combination of Ma and TR teaches the subject matter of limitation [1c]. Pet. 20–24. More particularly, Petitioner asserts that Ma discloses a random access signal transmitted on a RACH overlaid atop a common wireless channel or over one of two bands. *Id.* at 20–21 (citing Ex. 1005 ¶ 206, Fig. 2; Ex. 1003 ¶ 91). Petitioner contends that TR discloses a random access signal followed by a guard period. *Id.* at 21 (citing Ex. 1003 ¶ 92). Petitioner also argues that TR discloses a guard time following a RACH burst to account for "unknown propagation delay." *Id.* at 22–23 (citing Ex. 1006, 197, 207–208, Fig. 4; Ex. 1003 ¶ 94).

According to Petitioner, one of ordinary skill in the art would have had a reason to modify Ma's random access signal to include an additional guard interval at the back of the OFDM signal. Pet. 21. More particularly, Petitioner argues that

> [g]iven the "unknown propagation delay" particular to the random access signal as pointed out by TR, a POSITA would have been inspired to likewise add the additional safeguard following Ma's random access signal in the time domain to provide more buffer to ensure correct reception of the random access signal.

Id. at 21, 24 (citing Ex. 1003 ¶ 95). Petitioner further contends that one of ordinary skill in the art "would have been motivated to apply the 'guard time' feature as disclosed in TR to Ma's *random access signal* to achieve

various known advantages as discussed in TR." *Id.* at 24 (citing Ex. 1006, 197, 199, 207–208; Ex. 1003 ¶ 96).

With regard to the advantages TR describes, Petitioner argues that "TR discloses the use of guard time 'to be robust against very long multipath delay.'" Pet. 7 (citing Ex. 1006, 199) (emphasis omitted). According to Petitioner, "TR notes that 'the guard time helps to compensate timing misalignments,' especially for synchronization based on RACH 'by measuring the arrival time of the RACH burst.'" *Id.* at 8 (quoting Ex. 1006, 207) (emphasis omitted). Petitioner contends that TR's guard interval at the front and back of an OFDM symbol permits handling of timing inaccuracy without any performance degradation. *Id.* (citing Ex. 1006, 207, Fig. 17; Ex. 1003 ¶¶ 57, 58). Petitioner also argues that TR discloses a guard period following TR's random access signal and that TR teaches that "this additional buffer is to account for the propagation delay when transmitting the random access signal 'because the propagation delay is unknown before communication starts between MS and BS.'" *Id.* at 9–10 (citing Ex. 1006, 197, 207–208, Fig. 4; Ex. 1003 ¶¶ 59–60). Petitioner further asserts that "[b]oth Ma and TR disclose an OFDMA-based air interface systems and both discuss random access processes," and that:

> a POSITA would have reasons to leverage the system characteristics of the OFDMA-based air interface proposal for UMTS system as disclosed in TR, especially given various advantages of the OFDMA-based air interface identified in TR, including flexibility to support both circuit switched services and packet oriented services, and GSM backwards compatibility, as well as the guard time feature which can provide various advantages as discussed above in Section-III-2.

Id. at 10–11.[8]

In addition, Petitioner asserts that modifying Ma in view of TR would have been the application of a known technique to a known system that was ready for improvement to yield predictable results. Pet. 11, 24 (citing Ex. 1006, 177–178, 199, 207–208; Ex. 1003 ¶¶ 91–97).

(2) Patent Owner's Contentions

Patent Owner contends that Petitioner's ground of unpatentability based on Ma and TR is deficient. *See* Prelim. Resp. 3–28. According to Patent Owner it would not have been obvious to add TR's additional timeslot to Ma's RACH. *Id.* at 13–28. More particularly, Patent Owner argues that the Petition fails to provide reasons an ordinary artisan would have combined TR's additional slot with Ma's RACH given that "the Petition relies only on generalized reasons for combining *Ma* generally and *TR* generally, because (or so the Petition argues) they are both OFDM-based systems." *Id.* at 15 (citing Pet. 10–11). Patent Owner asserts that Petitioner fails to tie the rationales to combine "to features of *TR* or specific problems that *Ma* might have faced and needed to solve" and that Dr. Valenti's testimony "is equally vague and entitled to little weight." *Id.* at 17 (citing Pet. 10–11; Ex. 1003 ¶¶ 62–64).

Patent Owner takes the position that "*Ma* already had solutions to the problems *TR*'s extra timeslot is designed to solve." Prelim. Resp. 19. Patent Owner argues that TR uses its extra timeslot to compensate for unknown propagation delay, which could cause two related problems, but Ma's

[8] "Section III-2" is the Petition's summary of TR, which includes Petitioner's assertions regarding how TR's guard periods are advantageous, as discussed above. *See* Pet. 6–10.

system already solved both problems via spreading codes. *Id.* at 19–20 (citing Ex. 1006, 197; Pet. 24; Ex. 1003 ¶ 95; Ex. 2001 ¶ 30). Specifically, Patent Owner contends that Ma's "spreading factor" "keeps the power of its RACH low so it only 'constitutes a very ***weak*** interference to the traffic and signaling channels.'" *Id.* at 21 (quotingEx. 1005 ¶ 208; citing *id.* ¶¶ 206–207). Patent Owner also argues that Ma describes the use of Multi-Code-OFDMA ("MC-OFDMA"), which "in contrast to normal, vanilla OFDMA, 'introduces a code multiplexing on top of the "frequency and time divisions" created by the OFDMA.'" *Id.* (quoting Ex. 1005 ¶¶ 149, 208). According to Patent Owner, "*Ma* teaches that its use of spreading codes, in both its RACH and its underlying data communications, controls interference between the RACH and the underlying data communications – eliminating any need to add a timeslot to its RACH slot to further reduce interference." *Id.* at 22–23 (citing Ex. 2001 ¶ 30).

Patent Owner contends that Ma also teaches a second kind of spreading code to address interference that might arise between multiple RACH signals from different mobile stations. Prelim. Resp. 23 (citing Ex. 1005 ¶ 208). According to Patent Owner, the RACH signals do not interfere with each other because they have orthogonal signatures, and therefore, "*Ma* does not need to be concerned with the initial time alignment uncertainty." *Id.* (citing Ex. 2001 ¶ 30). In view of this, Patent Owner asserts that "the Petition offers no evidence, or reason, that it would have been obvious to add an extra timeslot to *Ma*'s RACH to avoid interference problems that *Ma* taught it already solved with spreading codes." *Id.* at 24. Patent Owner also argues that Ma does not need TR's extra timeslot to help

synchronize the timing offset for mobile stations. *Id.* at 24–25 (citing Ex. 1006, 207; Ex. 1005 ¶¶ 219, 220–232; Ex. 2001 ¶ 31).

In addition, Patent Owner asserts that it would not have been obvious to modify Ma to add TR's additional timeslot because "it would have created a large cost: this proposed combination would have reduced the available RACH bandwidth by 25%." Prelim. Resp. 26. According to Patent Owner, Ma explains that "RACH slots are the mechanism that allows new users to join the network." *Id.* (citing Ex. 1005 ¶ 205). Patent Owner contends that "the Petition's suggestions for adding a 'guard period' to *Ma*'s RACH would significantly reduce the number of RACH slots, and thus disadvantageously reduce the number of users that can join the network." *Id.* at 27 (citing Ex. 2001 ¶ 32). More particularly, Patent Owner argues that Ma's RACH slots are each four symbols long and modifying Ma's RACH to use TR's two "timeslots" would reduce the number of available RACH slots by a fourth, which "would have sharply reduced the valuable available bandwidth." *Id.* at 27–28 (citing Ex. 1005 ¶ 207; Ex. 2001 ¶ 32). According to Patent Owner, "modifying *Ma*'s RACH as suggested by the Petition would degrade the performance of *Ma*'s wireless network by increasing the wait time before new users can join the network." *Id.* at 28 (citing Ex. 2001 ¶ 32).

b) Discussion

Having considered the conflicting positions of the parties, we conclude that Petitioner has not shown a reasonable likelihood that it would prevail in challenging the patentability of independent claim 1. Instead, we agree with Patent Owner that Petitioner has not adequately established a rationale to combine Ma and TR, as proposed.

As noted above, Petitioner asserts that one of ordinary skill in the art would have had a reason to modify Ma in view of the advantages that TR teaches regarding its guard period. Pet. 7–11, 24 (citing Ex. 1006, 197, 199, 207–208, Figs. 4, 17; Ex. 1003 ¶¶ 57–60, 96). However, Petitioner does not show sufficiently, on this record, that the above-discussed disclosures of Ma and TR would have led an ordinarily skilled artisan to incorporate TR's guard period into Ma's RACH when that artisan has considered the full disclosure of Ma. Specifically, Petitioner's analysis, and Dr. Valenti's testimony in this regard, are both general in nature and fail to explain adequately how or why one of ordinary skill in the art would have implemented TR's guard period into Ma's RACH structure.[9] *See TriVascular*, 812 F.3d at 1066 ("Although the *KSR* test is flexible, the Board 'must still be careful not to allow hindsight reconstruction of references . . . without any explanation as to *how* or *why* the references would be combined to produce the claimed invention.'" (citation omitted)).

Instead, as Patent Owner points out (Prelim. Resp. 20–24), Ma teaches the use of a "spreading factor," which causes Ma's RACH signature to be "transmitted at a very low relative power level: e.g., -16 dB," which "constitutes a very weak interference to the traffic and signalling channels." Ex. 1005 ¶ 208. In addition, Patent Owner notes that Ma discloses the use of MC-OFDMA, which Ma teaches as introducing "a code multiplexing on top of the 'frequency and time divisions' created by the OFDMA." *Id.* ¶ 149. For these reasons, and the reasons discussed below, we credit the declaration

[9] Dr. Valenti's testimony merely mirrors the Petition, and Dr. Valenti does not provide additional explanation to support Petitioner's arguments. *See* Ex. 1003 ¶¶ 57–60, 96.

testimony of Patent Owner's expert, Mr. Alberth, that Ma's teachings already addressed the problems TR's guard period was meant to solve, and that there would have been "no need to add an additional timeslot to [Ma's] RACH slot to further reduce interference between RACH and Mode-1." Ex. 2001 ¶ 30.

According to Mr. Alberth, Ma uses MC-OFDMA for its Mode-1 communications, and therefore, "*Ma*'s RACH signatures are orthogonal to the data due to spreading." Ex. 2001 ¶ 30 (citing Ex. 1005 ¶¶ 148–149, 206, 216). And based on Ma's disclosure, Mr. Alberth explains that "[e]ven if the RACH signature from one user were mistimed it already overlaps and is orthogonal to the data so the base station can still distinguish between the RACH and the data" and "*Ma*'s RACH signatures are orthogonal to one another so, even if the RACH signature from one user were mistimed and overlapped with the RACH signature of another user, the base station can still distinguish between the two signatures." *Id.* (citing Ex. 1005 ¶¶ 208, 211, 213).

Mr. Alberth also testifies that adding TR's guard period to Ma's RACH would have actually had a negative effect. More particularly, Mr. Alberth states that "[t]he number of users able to join the network at any particular time is limited by the number of available RACH slots," but "*TR* teaches that the RACH should be assigned two timeslots." Ex. 2001 ¶ 32 (citing Ex. 1006, 197). Mr. Alberth explains that applying TR's concept to Ma's RACH would have increased the number of RACH symbols from four to five within a fixed bandwidth, and thus, resulted "in a 25% reduction in the number of RACH slots." *Id.* Patent Owner argues that the proposed modification of Ma in view of TR, therefore, "would degrade the

performance of *Ma*'s wireless network by increasing the wait time before new users can join the network." Prelim. Resp. 28 (citing Ex. 2001 ¶ 32).

As discussed above, Petitioner further contends that one of ordinary skill in the art would have had a reason to modify Ma to include TR's guard period because of "unknown propagation delay" and "to provide more buffer to ensure correct reception of the random access signal." Pet. 24 (citing Ex. 1003 ¶ 95). However, we do not view this additional assertion as sufficiently articulating a reason an ordinarily skilled artisan would have modified Ma's RACH to include TR's guard period when one considers Ma's teachings regarding the use of MC-OFDMA and a spreading factor, as well as the degraded performance effects of such a combination, as Patent Owner argues and Mr. Alberth testifies.

In addition, Petitioner asserts that modifying Ma in view of TR would have been applying a known technique to a known system that was ready for improvement to yield predictable results. Pet. 11, 24 (citing Ex. 1006, 177–178, 199, 207–208; Ex. 1003 ¶¶ 91–97). However, absent more analysis in the Petition or Dr. Valenti's declaration, we cannot say that Petitioner sufficiently shows that Ma's communication system was ready for improvement, or that implementing TR's guard period would have yielded predictable results given Ma's teachings of MC-OFDMA and its spreading factor.

Based on the current record, we are not persuaded that Petitioner has articulated a sufficient rationale to explain why one of ordinary skill in the art would have combined the references in the manner claimed. *See KSR*, 550 U.S. at 418–19 ("[I]t can be important to identify a reason that would have prompted a person of ordinary skill in the relevant field to combine the

elements in the way the claimed new invention does."). Other than citing the general advantages TR describes for its guard period, Petitioner's rationale to combine Ma and TR does not sufficiently address Ma's teachings that would appear to address the problems that would be addressed by TR's guard period. Further, Patent Owner persuasively demonstrates that the proposed combination would have resulted in a negative effect, i.e., degraded performance. *See* Ex. 2001 ¶ 31.

Therefore, based on the current record, we determine that Petitioner has not shown a reasonable likelihood of demonstrating that independent claim 1 would have been obvious to one of ordinary skill in the art over Ma and TR.

4. Claims 2–6, 8–16, 18–26, and 28–30

We have considered Petitioner's arguments and evidence for independent claims 11 and 21, and for dependent claims 2–6, 8–10, 12–16, 18–20, 22–26, and 28–30. Petitioner relies on the same arguments and evidence to address independent claims 11 and 21, and so, does not provide contentions for these claims that remedy the deficiencies discussed with respect to claim 1. *See* Pet. 11–45. Accordingly, for the reasons discussed with respect to claim 1, we conclude that Petitioner has not demonstrated a reasonable likelihood that it would prevail in showing that any of claims 2–6, 8–16, 18–26, and 28–30 are unpatentable under 35 U.S.C. § 103(a) as obvious over Ma and TR.

E. Alleged Obviousness over Ma, TR, and Jung

Petitioner challenges claims 10, 20, and 30 by adding Jung to the teachings of Ma and TR, in case "Ma-TR does not explicitly disclose the components of an OFDM transmitter." Pet. 54–55. Petitioner relies upon

Jung for teaching the added limitations of these dependent claims and, thus, does not remedy the deficiencies of the asserted art with respect to claims 1, 11, and 21. *Id.* Accordingly, for the same reasons discussed above, Petitioner fails to demonstrate a reasonable likelihood of prevailing in its assertion that the subject matter of claims 10, 20, and 30 would have been obvious over the combination of Ma, TR, and Jung.

F. Alleged Anticipation or Obviousness over Walton

Petitioner asserts that claims 1–6, 8–16, 18–26, and 28–30 are anticipated by or unpatentable as obvious over Walton. Pet. 58–97. Petitioner also relies on the testimony of Dr. Valenti to support its arguments. *Id*. (citing Ex. 1003). Patent Owner responds to Petitioner's assertions. Prelim. Resp. 28–55. We provide a brief overview of Walton before turning to the parties' arguments.

1. Overview of Walton (Ex. 1013)

Walton is titled "MIMO WLAN System." Ex. 1013, code (54). Walton relates "generally to data communication, and more specifically to a multiple-input multiple-output (MIMO) wireless local area network (WLAN) communication system." *Id.* ¶ 3.

Figure 1 of Walton is reproduced below.

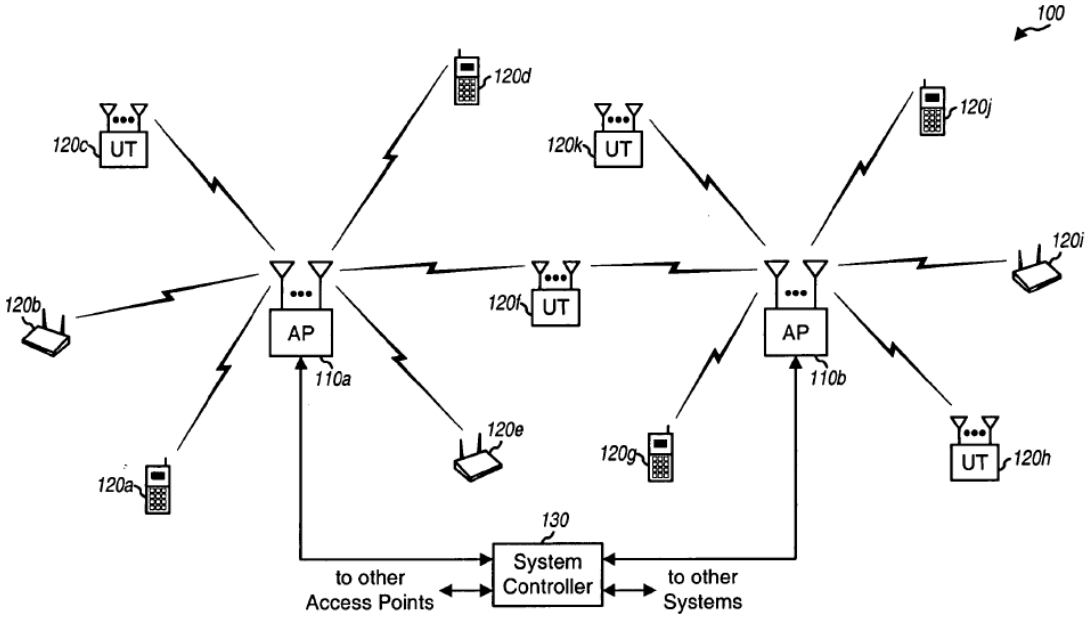

FIG. 1

Figure 1 depicts MIMO WLAN system 100 that includes access points 110a, 110b that support communication for user terminals 120a–120k. *Id.* ¶ 40. System 100 also includes system controller 130 that couples to access points 110a, 110b and may further couple to other systems and networks, such as "to a packet data network (PDN), a wired local area network (LAN), a wide area network (WAN), the Internet, a public switched telephone network (PSTN), a cellular communication network, and so on." *Id.* ¶ 43.

Walton describes the use of OFDM "to effectively partition the overall system bandwidth into a number of (NF) orthogonal subbands." Ex. 1013 ¶ 64. Walton also describes an embodiment in which system bandwidth is partitioned into 64 orthogonal subbands, with those subbands including 48 for data, 4 subbands for pilot and possibly signaling, an unused DC subband, and the remaining subbands being unused and serving as guard subbands. *Id.* ¶ 65.

Walton further describes the use of RACH by user terminals to gain access to Walton's system and to send short messages to an access point. Ex. 1013 ¶ 145. Walton describes an embodiment in which a random access scheme is used to permit user terminals to access the MIMO WLAN system. *Id.* ¶ 643. Walton states that "a user terminal transmits in a randomly selected RACH slot to attempt to gain access to the system" and "[t]he user terminal may send multiple transmissions on the RACH until access is gained or the maximum number of access attempts has been reached." *Id.* Walton explains that the RACH is partitioned into RACH slots, "[a] maximum of 32 RACH slots may be available for use in each [time-division duplexing (TDD)] frame," and "[t]he guard interval between the end of the last RACH slot and the start of the [broadcast channel (BCH)] [protocol data unit (PDU)] for the next TDD frame is also a configurable parameter." *Id.* ¶ 644.

2. Analysis of Claim 1

Petitioner asserts that Walton anticipates claim 1 or renders claim 1 obvious. Pet. 58–97. We use Petitioner's notations to identify the claim elements, and focus on the dispositive claim limitation, [1d].

a) [1d] wherein the random access signal includes a sequence associated with the base station

(1) Petitioner's Contentions

Petitioner asserts that Walton teaches limitation [1d] because Walton discloses that its "RACH PDU [the random access signal] includes a RACH message that . . . includes the user terminal's assigned MAC ID [a sequence associated with the base station] that allows the access point to identify the user terminal." Pet. 67 (bracketing in original) (emphasis omitted) (quoting Ex. 1013 ¶ 122; citing *id.* ¶ 645). According to Petitioner, "the 'unique

MAC ID' is 'assigned . . . by the access point' [associated with the base station])." *Id.* (bracketing in original) (emphasis omitted) (quoting Ex. 1013 ¶ 650; citing Ex. 1003 ¶ 176). Petitioner further argues that Walton's Table 16 demonstrates a length of 10 bits for the MAC ID. *Id.* (citing Ex. 1003 ¶ 177; Ex. 1013, Table 16).

(2) Patent Owner's Contentions

Patent Owner contends that the Petition fails to demonstrate that Walton teaches or renders obvious limitation [1d]. Prelim. Resp. 31–38. More particularly, Patent Owner argues that "the Petition identifies the claimed 'base station' as *Walton*'s Access Point (AP) 110" except when addressing the claimed "sequence." *Id.* at 31–32 (citing Pet. 56, 58, 82; Ex. 1013 ¶ 40). Patent Owner argues the former position is consistent with Walton's teaching that "[a]n access point may also be referred to as a base station." *Id.* at 32 (emphasis omitted) (citing Ex. 1013 ¶ 40). Patent Owner further asserts that "[c]onversely, the Petition maps *Walton*'s user terminal to the claimed 'mobile station.'" *Id.* (citing Pet. 56, 59, 70).

Patent Owner contends, however, that when addressing limitation [1d], the Petition instead reads Walton's user terminal, not Walton's access point, as corresponding to the claimed "base station." Prelim. Resp. 34 (citing Pet. 67). Patent Owner argues that "the MAC ID that Petitioner alleges is the claimed 'sequence' is 'associated with' the user terminal 120, ***not*** the access point 110." *Id.* at 31. According to Patent Owner, "[w]hen *Walton* refers to 'the ***user terminal's*** assigned MAC ID' it is referring to a MAC ID 'associated with' the ***mobile station***, not with the base station." *Id.* at 34–35 (citing Ex. 2001 ¶ 33). Patent Owner asserts that "[i]t would be illogical to suggest that the MAC ID is '***associated with*** the base station'

because it is ***assigned by*** the alleged 'base station'" and Walton's "access point 110 (the alleged 'base station') assigns the MAC ID to particular user terminals 120." *Id.* at 36 (citing Ex. 1013 ¶¶ 122, 650). Patent Owner further contends that "[t]he MAC ID field ***identifies*** the specific ***user terminal*** for which the information element is intended." *Id.* at 37 (citing Ex. 1013 ¶ 122).

According to Patent Owner, one of ordinary skill in the art "would have understood that *Walton's* MAC ID is 'associated with' the user terminal rather than the access point." Prelim. Resp. 37. Relying on its expert, Mr. Alberth, Patent Owner explains that

> *Walton*'s MAC ID would be "associated with" *Walton*'s user terminal, not *Walton*'s access point. Thus, under this read, in my opinion the MAC ID is not a "sequence associated with the base station" as required by the claims of the '908 patent. This is so at least because knowing the MAC ID does not allow for identification of the access point (the "base station" under this read).

Id. (quoting Ex. 2001 ¶ 33). Thus, Patent Owner argues that "the MAC ID is associated with *Walton*'s user terminal 120, not its access point 110." *Id.*

b) Discussion

Having considered the conflicting positions of the parties, we conclude that Petitioner has not shown a reasonable likelihood that it would prevail in challenging the patentability of independent claim 1. Instead, we agree with Patent Owner that Petitioner has not made a sufficient threshold showing that Walton teaches or suggests limitation [1d].

As discussed above, Petitioner cites Walton's assignment of a MAC ID to assert that Walton anticipates, or renders obvious, limitation [1d]. Pet. 67. Petitioner's arguments, however, do not sufficiently explain why

the assignment of a MAC ID to a user terminal by Walton's access point anticipates or renders obvious a "random access signal [that] includes a sequence *associated with the base station*," as limitation [1d] recites.

Patent Owner's citations to Walton demonstrate that the MAC ID is assigned to a user terminal by an access point and is used for the purpose of identifying a user terminal. In this regard, Walton discloses that:

> The MAC ID field identifies the specific user terminal for which the information element is intended. Each user terminal registers with the access point at the start of a communication session and is assigned a unique MAC ID by the access point. This [MAC] ID is used to identify the user terminal during the session.

Ex. 1013 ¶ 122. Walton also discloses that "[t]he access point responds by sending a MAC ID Assignment Message on the [forward channel] FCH" when a user terminal is registering with a system and that "[t]he access point explicitly acknowledges all correctly received RACH messages by sending acknowledgments on the [forward control channel (FCCH)] using the MAC ID assigned to the user terminal." *Id.* ¶ 650. Therefore, we agree with Patent Owner that the MAC ID identifies a specific user terminal. Prelim. Resp. 37.

As noted above, we find that Walton teaches the assignment of a MAC ID to a user terminal by an access point. Ex. 1013 ¶ 122. Petitioner, however, does not sufficiently explain how a MAC ID, which is taught as identifying a user terminal, is associated with a base station, as limitation [1d] requires. Nor does Petitioner sufficiently explain how the assignment of the MAC ID by the access point means that the MAC ID is "a sequence associated with the base station" when Walton teaches that the MAC ID functions to identify a user terminal, not an access point.

For these reasons, we also find persuasive Mr. Alberth's declaration testimony that a MAC ID is used to identify a user terminal and "*Walton*'s MAC ID would be 'associated with' *Walton*'s user terminal, not *Walton*'s access point." Ex. 2001 ¶ 33. We credit Mr. Alberth's expert opinion that "knowing the MAC ID does not allow for identification of the access point." *Id*. Petitioner's conclusory arguments and cited evidence for limitation [1d] do not provide a basis to accord this opinion less weight. For instance, Dr. Valenti's declaration testimony regarding limitation [1d] closely mirrors the attorney arguments set forth in the Petition. *Compare* Pet. 61, *with* Ex. 1003 ¶¶ 176, 177.

Like the attorney arguments in the Petition, Dr. Valenti limits his opinion regarding the claimed "sequence associated with the base station" to Walton's disclosure of a MAC ID. Ex. 1003 ¶ 176. For instance, Dr. Valenti concludes that the MAC ID is "*associated with the base station*," without explaining why a MAC ID that has been assigned by Walton's base station makes the MAC ID "a sequence associated with the base station," as limitation [1d] requires. In other words, Dr. Valenti's testimony merely asserts that Walton teaches or suggests the claimed random access signal and its sequence, much like Petitioner's attorney arguments. As a result, Dr. Valenti's testimony does not provide an additional basis to support Petitioner's contentions that Walton teaches or suggests limitation [1d]. *See* 37 C.F.R. § 42.65 ("Expert testimony that does not disclose the underlying facts or data on which the opinion is based is entitled to little or no weight.").

Based on the above, we conclude that Petitioner has not shown sufficiently that Walton teaches or suggests "wherein the random access

signal includes a sequence associated with the base station," as limitation [1d] recites. Therefore, Petitioner has not adequately established on this record a reasonable likelihood of success that it would prevail in demonstrating that Walton anticipates or would have rendered obvious claim 1.

3. Claims 2–6, 8–16, 18–26, and 28–30

We have considered Petitioner's arguments and evidence for independent claims 11 and 21, and for dependent claims 2–6, 8–10, 12–16, 18–20, 22–26, and 28–30. Petitioner relies on the same arguments and evidence to address independent claims 11 and 21,[10] and so, does not provide contentions for these claims that remedy the deficiency discussed with respect to claim 1. *See* Pet. 58–84. Accordingly, for the reasons discussed with respect to claim 1, we conclude that Petitioner has not demonstrated a reasonable likelihood that it would prevail in showing that any of claims 2–6, 8–16, 18–26, and 28–30 are unpatentable under 35 U.S.C. § 102(e) as anticipated by Walton or under 35 U.S.C. § 103(a) as unpatentable over Walton.

G. Alleged Obviousness over Walton and Jung

Petitioner challenges claims 10, 20, and 30 by adding Jung to the teachings of Walton, in case "Walton does not explicitly disclose an OFDM transmitter includes a *serial to parallel converter*." Pet. 97–98. Petitioner

[10] Limitation [21b] of independent claim 21 recites, among other things, "wherein the random access signal includes a sequence associated with a base station," and therefore, corresponds to limitations [1d] and [11d]. Pet. vi, viii, x. However, the Petition does not directly address this language of limitation [21b]. Pet. 74–76. Therefore, we assume that Petitioner relies on the position set forth for limitations [1d] and [11d].

relies upon Jung for teaching the added limitations of these dependent claims and, thus, does not remedy the deficiencies of the asserted art with respect to claims 1, 11, and 21. *Id.* Accordingly, for the same reasons discussed above, Petitioner fails to demonstrate a reasonable likelihood of prevailing in its assertion that the subject matter of claims 10, 20, and 30 would have been obvious over the combination of Walton and Jung.

III. CONCLUSION

For the foregoing reasons, we are not persuaded that the Petition establishes a reasonable likelihood that Petitioner would prevail in any of its challenges to claims 1–6, 8–16, 18–26, and 28–30 of the ’908 patent.

IV. ORDER

In consideration of the foregoing, it is hereby ordered that the Petition is *denied*, and no trial is instituted.

FOR PETITIONER:

W. Karl Renner
Jeremy J. Monaldo
Baile Xie
Fish & Richardson P.C.
axf-ptab@fr.com
jjm@fr.com
xie@fr.com

FOR PATENT OWNER:

Kenneth J. Weatherwax
Edward Hsieh
Parham Hendifar
Patrick Maloney
Vinson Lin
LOWENSTEIN & WEATHERWAX LLP
weatherwax@lowensteinweatherwax.com
hsieh@lowensteinweatherwax.com
hendifar@lowensteinweatherwax.com
maloney@lowensteinweatherwax.com
lin@lowensteinweatherwax.com

Hamad M. Hamad
CALDWELL, CASSADY & CURRY P.C.
lin@lowensteinweatherwax.com