US009398464B2

(12) **United States Patent**
Kummetz et al.

(10) **Patent No.: US 9,398,464 B2**
(45) **Date of Patent: Jul. 19, 2016**

(54) **BASE STATION ROUTER FOR DISTRIBUTED ANTENNA SYSTEMS**

(75) Inventors: **Thomas Kummetz**, Forest, VA (US); **Matthew Melester**, McKinney, TX (US); **Stefan Eisenwinter**, Buchdorf (DE); **Morgan Kurk**, Saches, TX (US)

(73) Assignee: **CommScope Technologies LLC**, Hickory, NC (US)

(*) Notice: Subject to any disclaimer, the term of this patent is extended or adjusted under 35 U.S.C. 154(b) by 272 days.

(21) Appl. No.: **13/546,425**

(22) Filed: **Jul. 11, 2012**

(65) **Prior Publication Data**

US 2013/0017863 A1 Jan. 17, 2013

Related U.S. Application Data

(60) Provisional application No. 61/506,363, filed on Jul. 11, 2011.

(51) **Int. Cl.**

H04W 40/00	(2009.01)
H04W 16/04	(2009.01)
H04W 16/26	(2009.01)
H04W 16/06	(2009.01)
H04W 16/24	(2009.01)
H04W 88/08	(2009.01)

(52) **U.S. Cl.**
CPC ***H04W 16/04*** (2013.01); ***H04W 16/26*** (2013.01); *H04W 16/06* (2013.01); *H04W 16/24* (2013.01); *H04W 88/085* (2013.01)

(58) **Field of Classification Search**
CPC ... H04W 16/24; H04W 88/085; H04W 16/06; H04W 72/04
USPC 455/446–448
See application file for complete search history.

(56) **References Cited**

U.S. PATENT DOCUMENTS

4,918,684	A	4/1990	Boschet et al.	
5,353,332	A	10/1994	Raith et al.	
5,507,007	A *	4/1996	Gunmar et al.	455/447

(Continued)

FOREIGN PATENT DOCUMENTS

CN	101572903	11/2009
CN	101610135	12/2009

(Continued)

OTHER PUBLICATIONS

International Patent Application No. PCT/US2012/052845, International Search Report and Written Opinion mailed Jan. 30, 2013 (8 pages).

(Continued)

Primary Examiner — Charles Appiah
Assistant Examiner — Jaime Holliday
(74) *Attorney, Agent, or Firm* — Fogg & Powers LLC

(57) **ABSTRACT**

Certain aspects are directed to a base station router disposed in a distributed antenna system. The base station router includes a backplane and a controller. The backplane can manage an availability of sectors for coverage zones. Each sector can include communication channels to be radiated to mobile devices in the coverage zones and can represent an amount of telecommunication capacity. The controller can respond to a traffic indicator by causing the backplane to redistribute the availability of at least one sector. The sector can be redistributed from a first coverage zone to a second coverage zone.

20 Claims, 8 Drawing Sheets

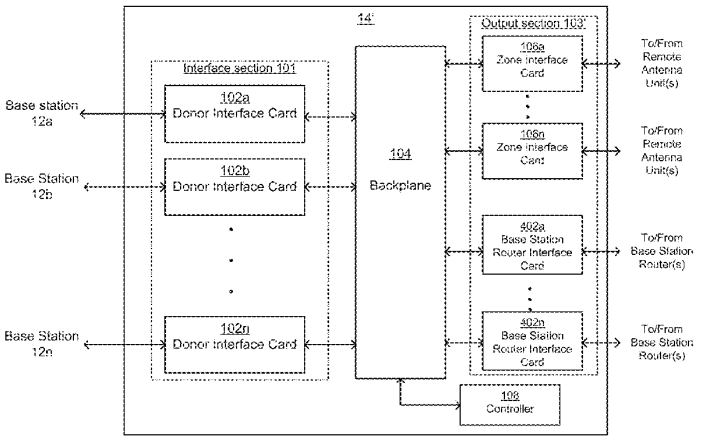

(56) **References Cited**

U.S. PATENT DOCUMENTS

5,574,466	A	11/1996	Reed et al.	
5,594,350	A	1/1997	Koizumi et al.	
5,621,786	A	4/1997	Fischer et al.	
5,627,879	A	5/1997	Russell et al.	
5,642,405	A	6/1997	Fischer et al.	
5,644,622	A	7/1997	Russell et al.	
5,657,374	A	8/1997	Russell et al.	
5,682,256	A	10/1997	Motley et al.	
5,694,082	A	12/1997	Schmidt	
5,748,001	A	5/1998	Cabot	
5,852,651	A	12/1998	Fischer et al.	
5,909,642	A	6/1999	Suzuki	
6,009,129	A	12/1999	Kenney et al.	
6,047,199	A	4/2000	Demarco	
6,128,500	A	10/2000	Raghavan et al.	
6,144,692	A	11/2000	Beck	
6,366,776	B1	4/2002	Wright et al.	
6,418,327	B1	7/2002	Carey et al.	
6,646,449	B2	11/2003	Seppinen et al.	
6,704,545	B1	3/2004	Wala	
6,708,036	B2 *	3/2004	Proctor et al.	455/446
6,731,237	B2	5/2004	Gustafson et al.	
6,785,558	B1	8/2004	Stratford et al.	
6,801,767	B1	10/2004	Schwartz et al.	
6,826,164	B2	11/2004	Mani et al.	
6,831,901	B2	12/2004	Millar	
6,842,431	B2	1/2005	Clarkson et al.	
6,873,827	B1	3/2005	Wright	
6,895,247	B2	5/2005	Mostafa	
6,937,863	B1 *	8/2005	Gordon et al.	455/446
6,963,552	B2	11/2005	Sabat, Jr. et al.	
6,996,374	B1	2/2006	Bao et al.	
7,013,136	B2	3/2006	Frangione et al.	
7,025,262	B2	4/2006	Byskov et al.	
7,082,320	B2	7/2006	Kattukaran et al.	
7,120,546	B2	10/2006	Zyss et al.	
7,123,023	B2	10/2006	Minihold et al.	
7,127,175	B2	10/2006	Mani et al.	
7,127,211	B2	10/2006	Hildebrand et al.	
7,205,864	B2	4/2007	Schultz, Jr. et al.	
7,215,651	B2	5/2007	Millar	
7,224,170	B2	5/2007	Graham et al.	
7,286,507	B1 *	10/2007	Oh et al.	370/334
7,313,415	B2	12/2007	Wake et al.	
7,398,106	B2	7/2008	Conyers et al.	
7,403,503	B2	7/2008	Cuffaro et al.	
7,423,988	B2	9/2008	Hedin et al.	
RE40,564	E	11/2008	Fischer et al.	
7,469,105	B2	12/2008	Wake et al.	
7,474,635	B2	1/2009	Linsky et al.	
7,574,234	B2	8/2009	Conyers et al.	
7,639,982	B2	12/2009	Wala	
7,640,019	B2	12/2009	Conyers et al.	
7,702,985	B2	4/2010	Millar	
7,761,093	B2	7/2010	Sabat, Jr. et al.	
7,787,854	B2	8/2010	Conyers et al.	
7,876,867	B2	1/2011	Filipovic et al.	
7,920,858	B2	4/2011	Sabat, Jr. et al.	
8,036,156	B2	10/2011	Hedin et al.	
8,160,570	B2	4/2012	Sabat, Jr. et al.	
8,175,540	B2	5/2012	Jones	
8,194,597	B2	6/2012	Feder et al.	
8,290,483	B2	10/2012	Sabat, Jr. et al.	
8,326,218	B2	12/2012	Wala	
RE43,964	E	2/2013	Fischer et al.	
RE44,398	E	7/2013	Conyers et al.	
8,515,339	B2	8/2013	Yona et al.	
8,542,768	B2	9/2013	Kim et al.	
8,559,939	B2	10/2013	Sabat, Jr. et al.	
8,577,286	B2	11/2013	Wala	
8,583,100	B2	11/2013	Koziy et al.	
8,682,338	B2	3/2014	Lemson et al.	
8,724,664	B2	5/2014	Stapleton et al.	
8,737,300	B2	5/2014	Stapleton et al.	
8,737,454	B2	5/2014	Wala et al.	
8,817,848	B2	8/2014	Lemson et al.	
8,824,595	B2	9/2014	Kim et al.	
8,831,593	B2	9/2014	Melester et al.	
8,848,766	B2	9/2014	Lemson et al.	
RE45,321	E	1/2015	Fischer et al.	
9,025,956	B2	5/2015	Stapleton et al.	
9,048,797	B2	6/2015	Kim et al.	
9,137,078	B2	9/2015	Stapleton et al.	
9,148,203	B2	9/2015	Lemson et al.	
9,148,324	B2	9/2015	Stapleton et al.	
9,197,358	B2	11/2015	Hejazi et al.	
9,236,897	B2	1/2016	Stapleton et al.	
2002/0094785	A1	7/2002	Deats	
2003/0039319	A1	2/2003	Engelse et al.	
2003/0040329	A1	2/2003	Yona et al.	
2003/0073463	A1 *	4/2003	Shapira	455/562
2003/0153273	A1	8/2003	Ebert et al.	
2005/0102449	A1	5/2005	Durston	
2005/0157675	A1	7/2005	Feder et al.	
2005/0259684	A1	11/2005	Csapo	
2006/0002326	A1	1/2006	Vesuna	
2006/0019679	A1	1/2006	Rappaport et al.	
2006/0094470	A1	5/2006	Wake et al.	
2007/0010224	A1	1/2007	Shi	
2007/0213006	A1	9/2007	Wong et al.	
2007/0259625	A1	11/2007	Tolaio et al.	
2008/0039089	A1	2/2008	Berkman et al.	
2008/0287083	A1	11/2008	Payne, IV	
2008/0298445	A1	12/2008	Richardson et al.	
2009/0017835	A1	1/2009	Song et al.	
2009/0086028	A1	4/2009	Miller et al.	
2009/0239475	A1	9/2009	Lehman	
2010/0029237	A1	2/2010	Yamamoto et al.	
2010/0085061	A1	4/2010	Bradley et al.	
2010/0113006	A1	5/2010	Pajjuri et al.	
2010/0128676	A1	5/2010	Wu et al.	
2010/0164504	A1	7/2010	Bradley	
2010/0178936	A1	7/2010	Wala et al.	
2010/0197238	A1	8/2010	Pathuri et al.	
2010/0202356	A1	8/2010	Fischer et al.	
2010/0260103	A1	10/2010	Guey et al.	
2010/0278530	A1	11/2010	Kummetz et al.	
2010/0295533	A1	11/2010	Kuga et al.	
2011/0059709	A1	3/2011	Collins	
2011/0105184	A1 *	5/2011	Piirainen et al.	455/562.1
2011/0135308	A1 *	6/2011	Tarlazzi et al.	398/79
2011/0151839	A1	6/2011	Bolon et al.	
2011/0158081	A1	6/2011	Wang et al.	
2011/0164878	A1	7/2011	Ma et al.	
2011/0194548	A1	8/2011	Feder et al.	
2011/0201269	A1	8/2011	Hobbs et al.	
2012/0039254	A1	2/2012	Stapleton et al.	
2012/0093269	A1	4/2012	Yu et al.	
2012/0155572	A1	6/2012	Kim et al.	
2013/0071112	A1	3/2013	Melester et al.	
2013/0114486	A1	5/2013	Spedaliere et al.	
2013/0114963	A1	5/2013	Stapleton et al.	
2013/0128810	A1	5/2013	Lee et al.	
2013/0182753	A1	7/2013	Delforce et al.	
2014/0010168	A1	1/2014	Stapleton et al.	
2014/0036770	A1	2/2014	Stapleton et al.	
2014/0057627	A1	2/2014	Hejazi et al.	
2014/0079153	A1	3/2014	Kim et al.	
2014/0119197	A1	5/2014	Maca et al.	
2014/0206282	A1	7/2014	Stapleton et al.	
2014/0233468	A1	8/2014	Hejazi et al.	
2014/0286247	A1	9/2014	Lemson et al.	
2014/0313884	A1	10/2014	Stapleton et al.	
2015/0080054	A1	3/2015	Kim et al.	

FOREIGN PATENT DOCUMENTS

CN	101635590	3/2010
CN	103733664	4/2014
CN	103875270	6/2014
CN	103891179	6/2014
EP	1081883	3/2001
EP	2661828	11/2013
EP	2732653	5/2014

(56) **References Cited**

FOREIGN PATENT DOCUMENTS

EP	2756619		7/2014
JP	2002190780		7/2002
JP	2005151189		6/2005
KR	19980067669		10/1998
KR	20020041516		6/2002
KR	2005049070		5/2005
KR	2006120361		11/2006
KR	2007118460		12/2007
KR	2008086604		9/2008
KR	2009080762		7/2009
WO	9739597		10/1997
WO	2005109700		11/2005
WO	2007044653		4/2007
WO	WO2008027213	A2	3/2008
WO	2008088862		7/2008
WO	2009039396		3/2009
WO	2009082084		7/2009
WO	2013009835	A1	1/2013
WO	2013033199	A1	3/2013
WO	2013040579		3/2013
WO	2013040589		3/2013

OTHER PUBLICATIONS

International Patent Application No. PCT/US2012/046207, International Search Report and Written Opinion mailed Nov. 15, 2012 (9 pages), Nov. 15, 2012.

"An Introduction to Neutral Host Distributed Antenna Systems", infinigy networks, published at least by Nov. 7, 2004, 14 Pages.

"Distributed Antenna Systems and MIMO Technology", TE Connectivity Wireless and Services, Apr. 2011, 8 Pages.

Feng et al., "Downlink Capacity of Distributed Antenna Systems in a Multi-Cell Environment", Communications and Networking, Sep. 2010, 14 pages.

Heath, Jr. et al., "Multiuser MIMO in Distributed Antenna Systems", Signals, Systems and Computers (ASILOMAR), 2010 Conference Record of the Forty Fourth Asilomar Conference, Nov. 2010, 5 pages.

Qiang et al., "Study on Computer-Based Integrated Passive Inter-Modulation Measurement System", Chinese Journal of Scientific Instrument, Jul. 1009, pp. 1540-1545.

Singh et al., "Systems Methodology for PIM Mitigation of Communications Satellites", 4th International Workshop on Multipactor, Corona and Passive Intermodulation in Space RF Hardware, Sep. 8-11, 2003, 9 pages.

Office Action dated Dec. 3, 2014 issued on related Chinese Patent Application No. CN201280050939.8 , 11pages.

Bell et al., "Range to Fault Technology," Retrieved from the Internet: http://www.livingston.co.uk/files/bestanden/rtfwhitepaper.pdf, Jan. 1, 2011, Kaelus Inc. 10 pages.

Brahmanapally et al., "Analysis and determination of intermodulation hits in mobile communication," *Proceedings of the 8th WSEAS International Conference on Data Networks, Communications, Computers, DNCOCO '09*, Nov. 7-9, 2009, pp. 130-134 (Provided One Page Abstract Only).

Chalmers, "Detecting and correcting intermodulation," *Global Communications*, 1985, vol. 7, Issue 1, pp. 22-25 (Provided One Page Abstract Only).

European Patent Application No. EP12832171.8, Extended European Search Report, mailed Apr. 24, 2014, 9 pages.

International Patent Application No. PCT/US2012/046207, International Preliminary Report on Patentability, mailed Jan. 23, 2014, 8 pages.

International Patent Application No. PCT/US2012/055793, International Search Report and Written Opinion, mailed Dec. 28, 2012, 9 pages.

International Patent Application No. PCT/US2012/055793, International Preliminary Report on Patentability, mailed Mar. 27, 2014, 6 pages.

International Patent Application No. PCT/US2012/055807, International Search Report and Written Opinion, mailed Dec. 26, 2012, 9 pages.

International Patent Application No. PCT/US2012/055807, International Preliminary Report on Patentability, mailed Mar. 27, 2014, 6 pages.

Nash, "Intermodulation Distortion Problems at UMTS Cell Sites," Aeroflex Wireless Test Solutions, Burnham, UK (http://www.aeroflex.com/ats/products/prodfiles/articles/8814/Intermod.pdf), Published at least by Jan. 3, 2010, pp. 1-10.

U.S. Appl. No. 13/621,504, Non-Final Office Action, mailed Feb. 13, 2014, 28 pages.

U.S. Appl. No. 13/621,504, Notice of Allowance, mailed Jun. 18, 2014, 7 pages.

U.S. Appl. No. 13/978,966, Non-Final Office Action, mailed Apr. 15, 2014, 34 pages.

U.S. Appl. No. 13/978,966, Non-Final Office Action, mailed Sep. 5, 2014, 32 pages.

Tolstrup , Noise, Indoor Radio Planning, Jul. 14, 2011, pp. 295-328.

U.S. Appl. No. 13/978,966 , Notice of Allowance, mailed Jan. 21, 2015, 11 pages.

European Patent Application No. 12826731.7 , Extended European Search Report, mailed Mar. 12, 2015, 10 pages.

* cited by examiner

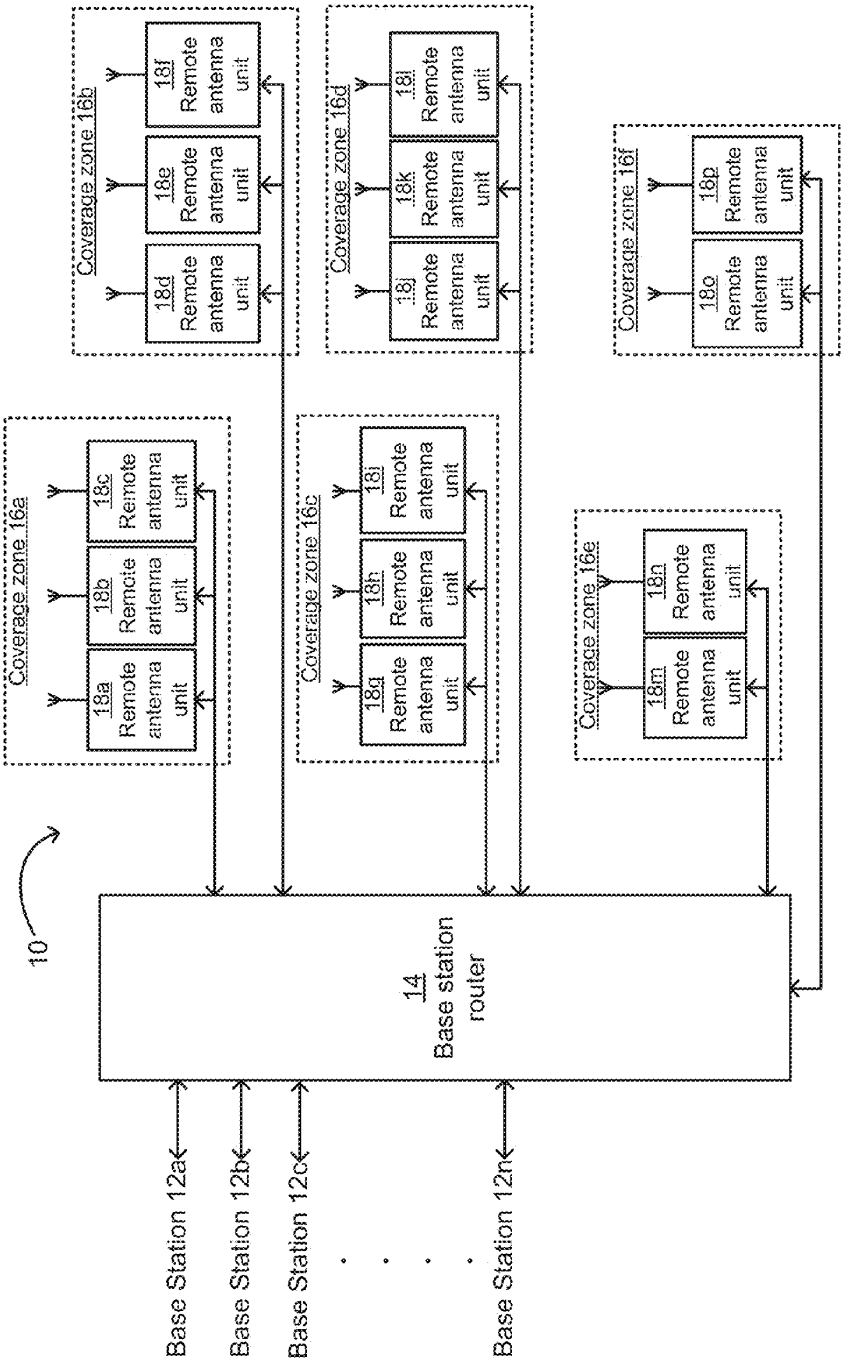
10
Coverage zone 16a
18a Remote antenna unit
18b Remote antenna unit
18c Remote antenna unit
Coverage zone 16b
18d Remote antenna unit
18e Remote antenna unit
18f Remote antenna unit
Coverage zone 16c
18g Remote antenna unit
18h Remote antenna unit
18i Remote antenna unit
Coverage zone 16d
18j Remote antenna unit
18k Remote antenna unit
18l Remote antenna unit
Coverage zone 16e
18m Remote antenna unit
18n Remote antenna unit
Coverage zone 16f
18o Remote antenna unit
18p Remote antenna unit
14 Base station router
Base Station 12a
Base Station 12b
Base Station 12c
Base Station 12n

FIG. 1

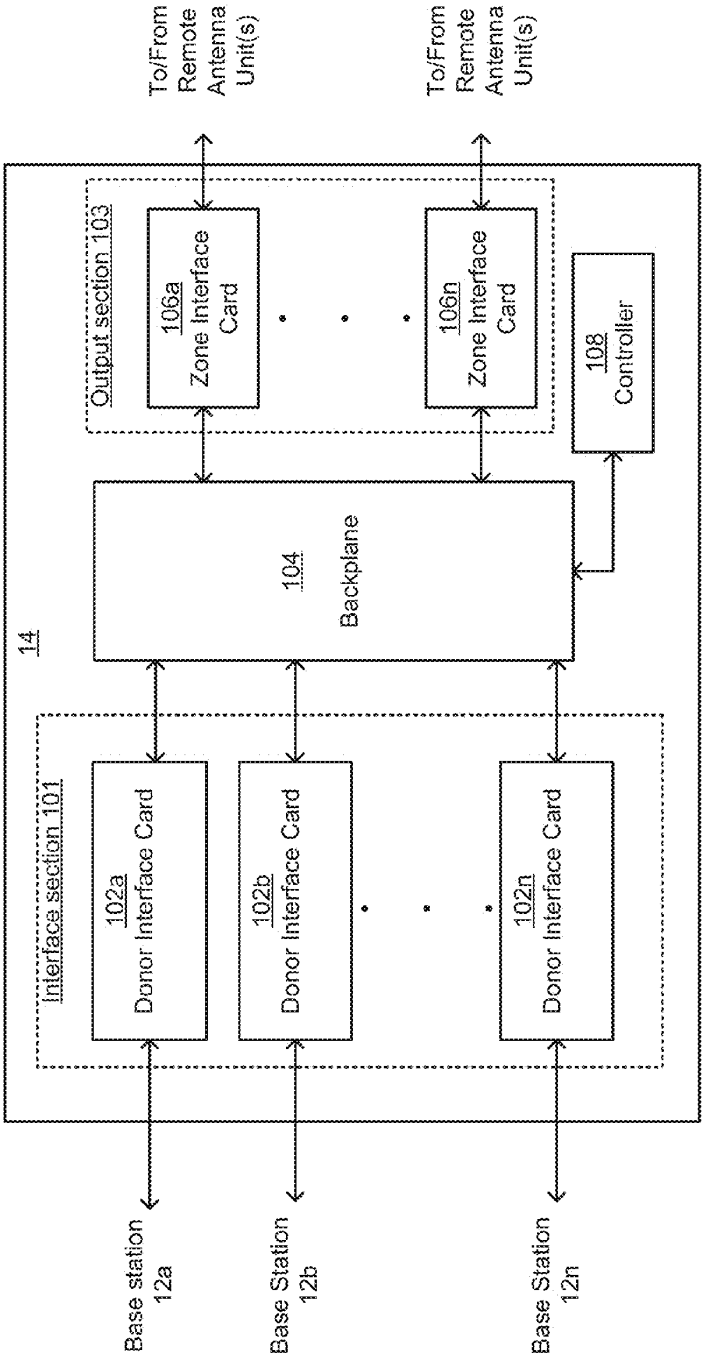
14
Interface section 101
102a
Donor Interface Card
102b
Donor Interface Card
102n
Donor Interface Card
Base station
12a
Base Station
12b
Base Station
12n
104
Backplane
Output section 103
106a
Zone Interface
Card
106n
Zone Interface
Card
108
Controller
To/From
Remote
Antenna
Unit(s)
To/From
Remote
Antenna
Unit(s)

FIG. 2

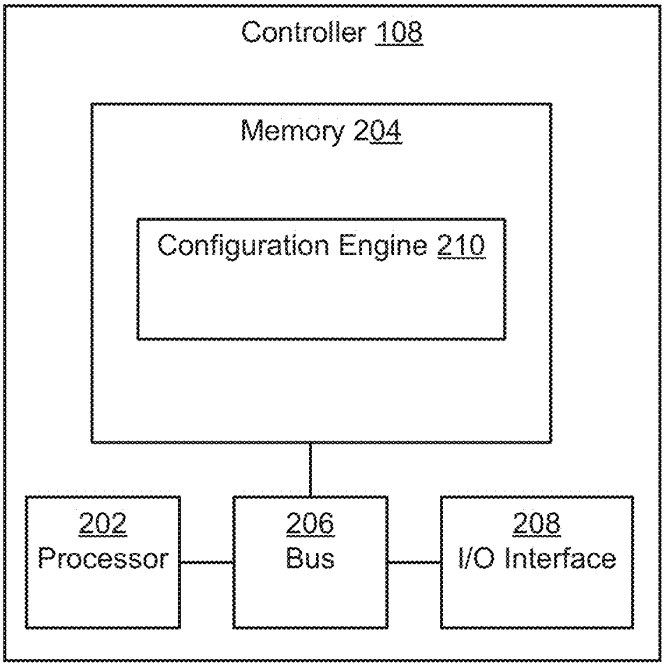
Controller 108
Memory 204
Configuration Engine 210
202
Processor
206
Bus
208
I/O Interface

FIG. 3

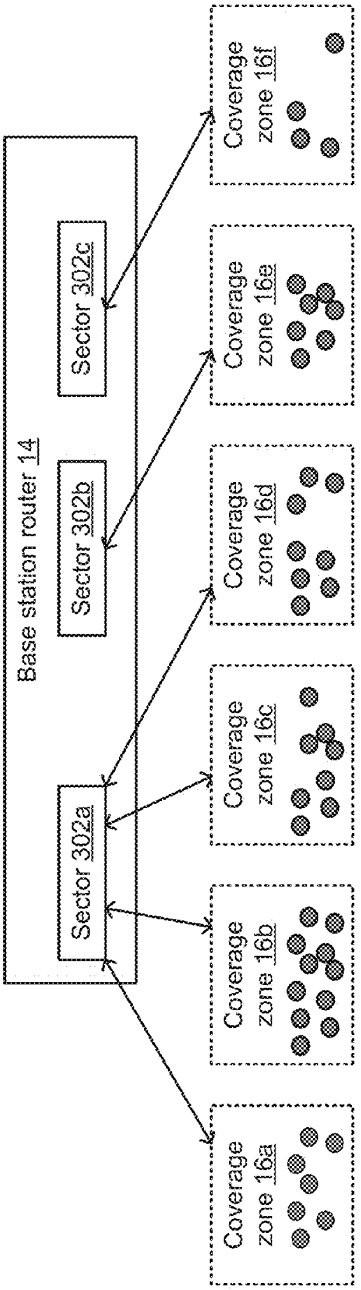
Base station router 14
Sector 302a
Sector 302b
Sector 302c
Coverage zone 16a
Coverage zone 16b
Coverage zone 16c
Coverage zone 16d
Coverage zone 16e
Coverage zone 16f

FIG. 4

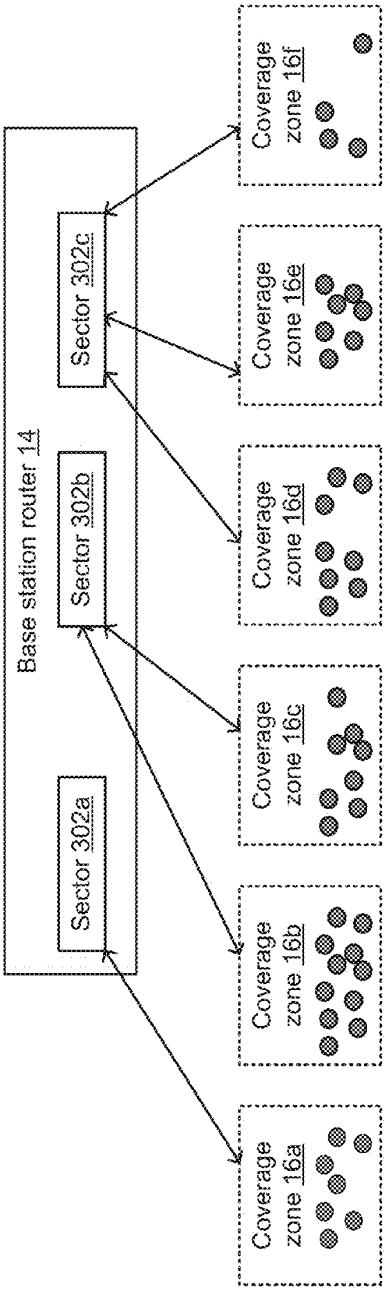
Base station router 14
Sector 302a
Sector 302b
Sector 302c
Coverage zone 16a
Coverage zone 16b
Coverage zone 16c
Coverage zone 16d
Coverage zone 16e
Coverage zone 16f

FIG. 5

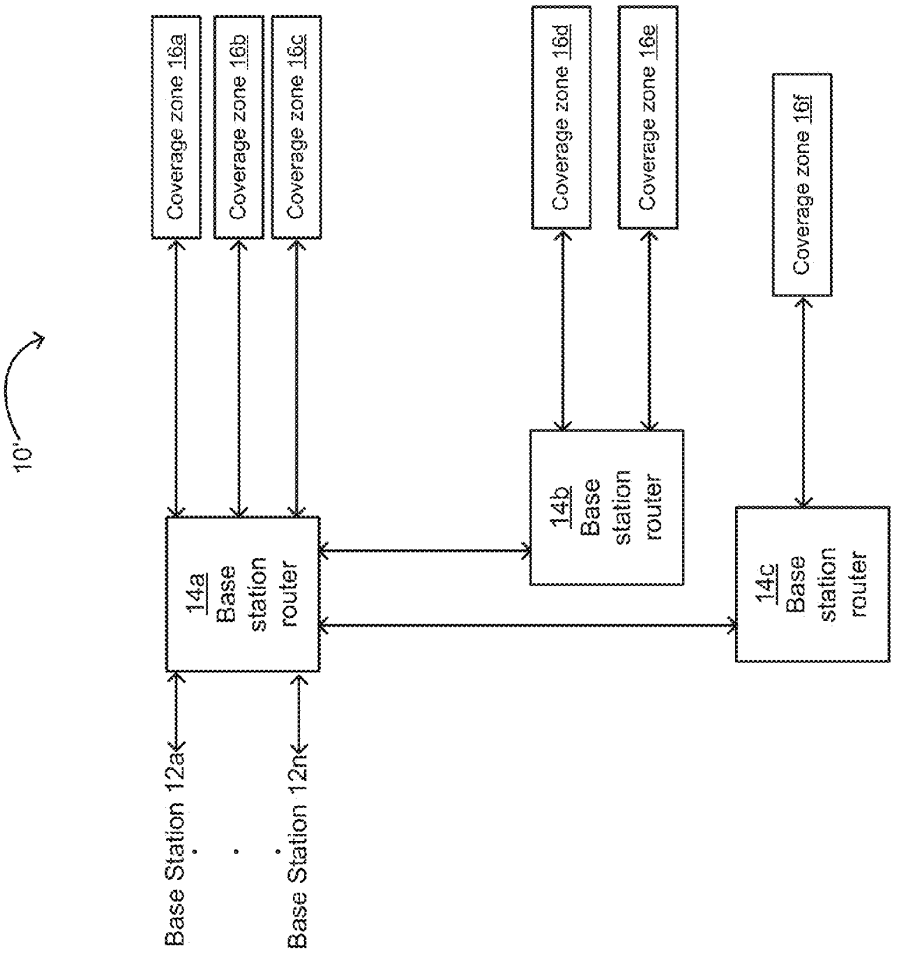
10'
Base Station 12a
Base Station 12n
14a Base station router
Coverage zone 16a
Coverage zone 16b
Coverage zone 16c
14b Base station router
Coverage zone 16d
Coverage zone 16e
14c Base station router
Coverage zone 16f

FIG. 6

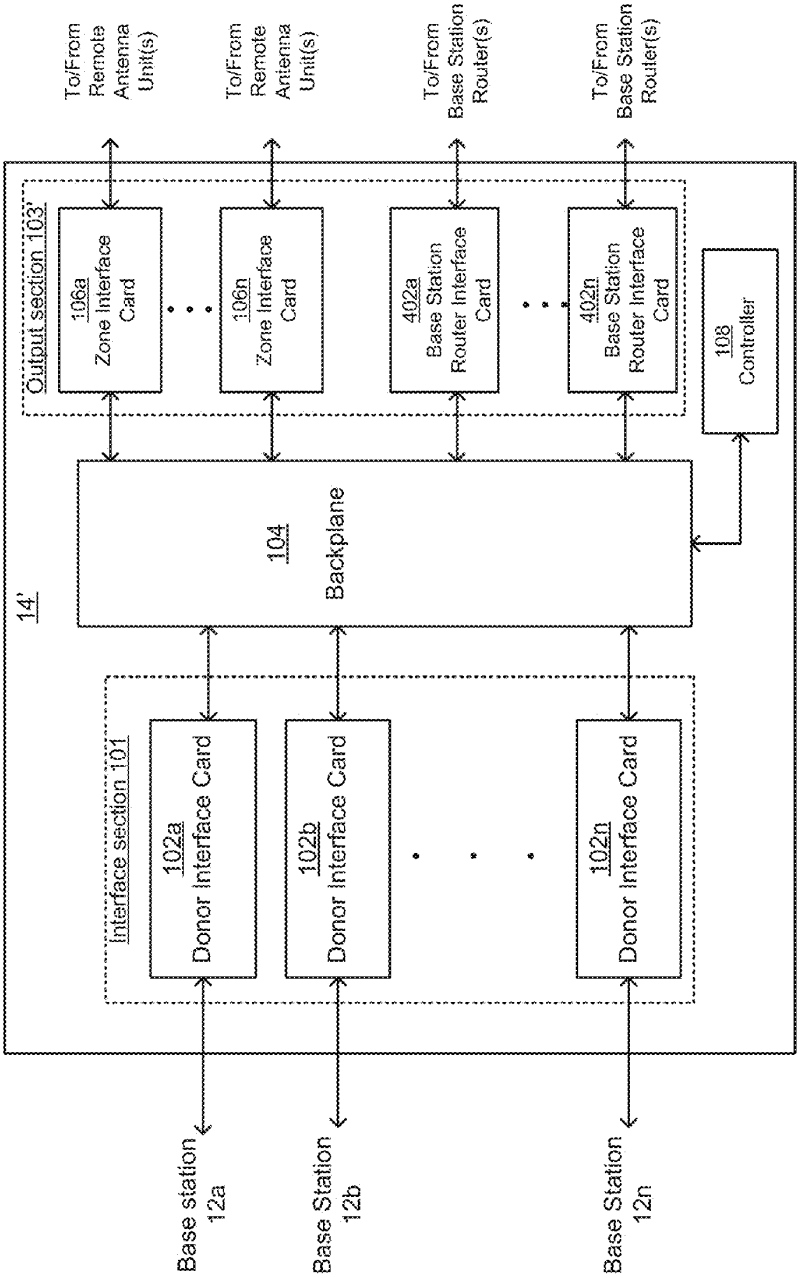
14'
Output section 103'
106a Zone Interface Card
106n Zone Interface Card
402a Base Station Router Interface Card
402n Base Station Router Interface Card
108 Controller
104 Backplane
Interface section 101
102a Donor Interface Card
102b Donor Interface Card
102n Donor Interface Card
To/From Remote Antenna Unit(s)
To/From Remote Antenna Unit(s)
To/From Base Station Router(s)
To/From Base Station Router(s)
Base station 12a
Base Station 12b
Base Station 12n

FIG. 7

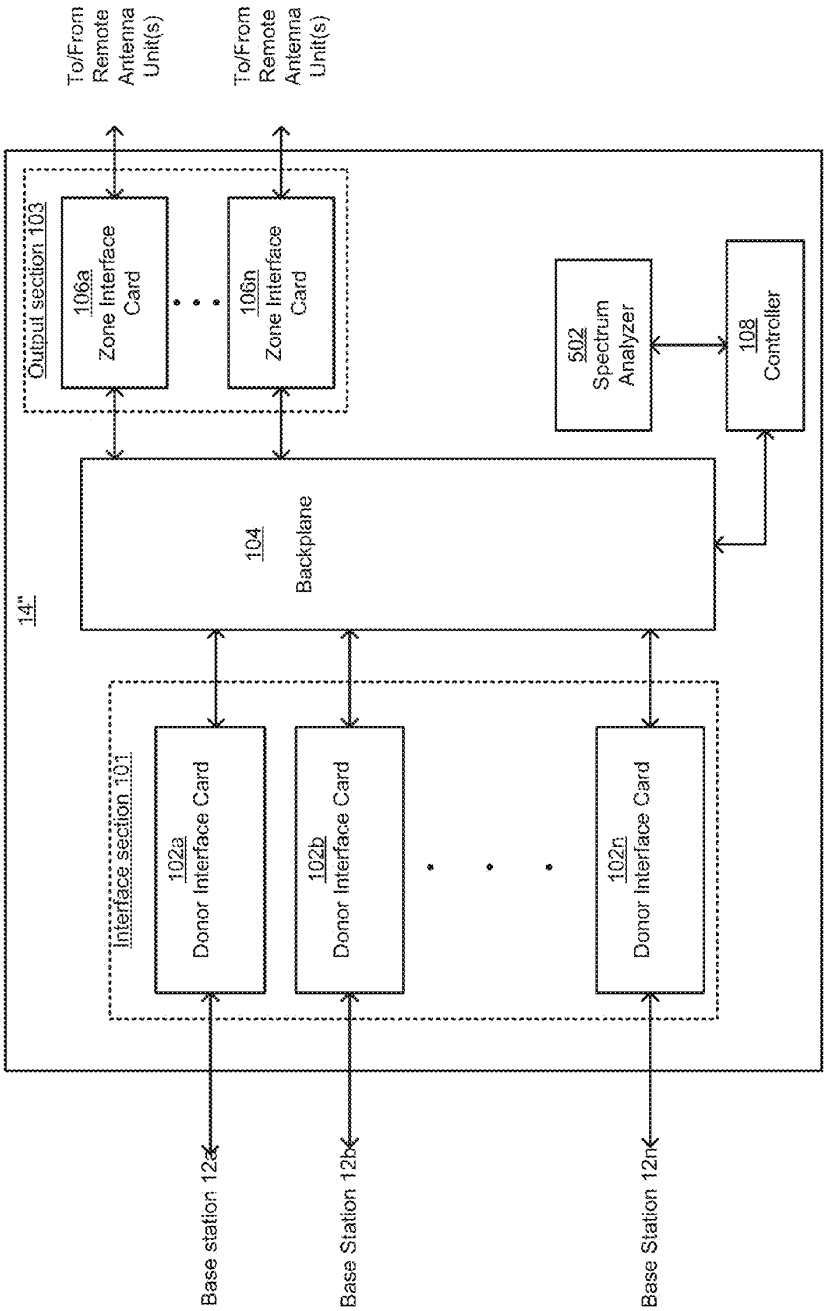
To/From Remote Antenna Unit(s)
To/From Remote Antenna Unit(s)
Output section 103
106a Zone Interface Card
106n Zone Interface Card
502 Spectrum Analyzer
108 Controller
14"
104 Backplane
Interface section 101
102a Donor Interface Card
102b Donor Interface Card
102n Donor Interface Card
Base station 12a
Base Station 12b
Base Station 12n

FIG. 8

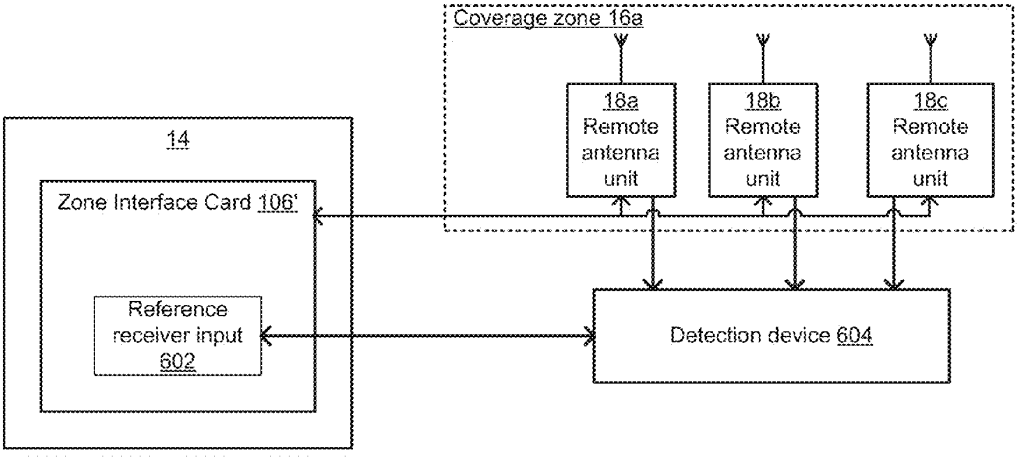
Coverage zone 16a
18a
Remote
antenna
unit
18b
Remote
antenna
unit
18c
Remote
antenna
unit
14
Zone Interface Card 106'
Reference
receiver input
602
Detection device 604

FIG. 9

BASE STATION ROUTER FOR DISTRIBUTED ANTENNA SYSTEMS

RELATED APPLICATION

This application claims the benefit of U.S. Provisional Application Ser. No. 61/506,363, filed Jul. 11, 2011 and titled "Intelligent Point of Interface for Distributed Antenna Systems," the contents of which are hereby incorporated by reference.

TECHNICAL FIELD

The present invention relates generally to telecommunications and, more particularly (although not necessarily exclusively), to a base station router for distributed antenna systems.

BACKGROUND

A distributed antenna system ("DAS") can be used to extend the coverage of a cellular communication system. For example, a DAS can extend coverage to areas of traditionally low signal coverage within buildings, tunnels, or in areas obstructed by terrain features. Cellular communication systems can include the capability to provide data services via a DAS. In locations with a higher density of wireless devices, such as stadiums, sport arenas, or similar venues, the signal capacity needed to provide signal coverage to different physical areas can change over time. Providing extra signal capacity to supply the maximum capacity to each section in a location with varying numbers of wireless devices or other mobile units can be associated with prohibitively high costs.

Systems that can connect one or more base stations to one or more DAS's to distribute signal capacity adaptively are therefore desirable.

SUMMARY

In one aspect, a base station router disposed in a distributed antenna system is provided. The base station router includes a backplane and a controller. The backplane can manage an availability of sectors for coverage zones. Each sector can include communication channels to be radiated to mobile devices in the coverage zones and can represent an amount of telecommunication capacity. The controller can respond to a traffic indicator by causing the backplane to redistribute the availability of at least one sector. The sector can be redistributed from a first coverage zone to a second coverage zone.

In another aspect, a distributed antenna system is provided. The distributed antenna system includes a first remote antenna unit, a second remote antenna unit, and a base station router. The first remote antenna unit can wirelessly communicate with mobile devices located in a first coverage zone. The second remote antenna unit can wirelessly communicate with mobile devices located in a second coverage zone. The base station router can distribute an availability of a sector to the first remote antenna unit and the second remote antenna unit. The sector can include communication channels and represent an amount of telecommunication capacity. The base station router can redistribute the availability of the sector from the first remote antenna unit to the second remote antenna unit in response to detecting a traffic indicator.

In another aspect, a method is provided. The method involves distributing an availability of a sector to a first coverage zone. The sector includes communication channels and represents an amount of telecommunication capacity. The method also involves receiving a traffic indicator. The method also involves, in response to receiving the traffic indicator, redistributing the availability of the sector from the first coverage zone to a second coverage zone.

These illustrative aspects and features are mentioned not to limit or define the invention, but to provide examples to aid understanding of the inventive concepts disclosed in this disclosure. Other aspects, advantages, and features of the present invention will become apparent after review of the entire disclosure.

BRIEF DESCRIPTION OF THE DRAWINGS

FIG. **1** is a schematic view of a distributed antenna system having a base station router according to one aspect.

FIG. **2** is a block diagram of a base station router with an interface section, an output section, and a backplane according to one aspect.

FIG. **3** is a block diagram of a controller for configuring a base station router according to one aspect.

FIG. **4** is a modeling diagram of a first configuration of a base station router providing sectors to coverage zones according to one aspect.

FIG. **5** is a modeling diagram of a second configuration of a base station router providing sectors to coverage zones according to one aspect.

FIG. **6** is a block diagram of interconnected base station routers according to one aspect.

FIG. **7** is a block diagram of a base station router configured to communicate with other base station routers according to one aspect.

FIG. **8** is a block diagram of a base station router having a spectrum analyzer according to one aspect.

FIG. **9** is a block diagram of a base station router having a zone interface card with a reference receiver input according to one aspect.

DETAILED DESCRIPTION

Certain aspects and examples are directed to a base station router, such as a base station sector router, that can be disposed in a distributed antenna system ("DAS") and that can redistribute capacity among coverage zones serviced by the DAS. A DAS can include a unit, such as a base station router, in communication with carrier systems, such as base stations of cellular service providers. Redistributing capacity can include modifying the distribution of sectors to coverage zones of the DAS. A sector can include one or more telecommunication channels to be radiated to mobile devices in coverage zones or otherwise distributed to the coverage zones, thereby providing telecommunication capacity in the coverage zones. The sector can be distributed without further subdivision.

The base station router can provide one or more signals, such as analog RF signals or digitized RF signals, over one or more communication channels, such as (but not limited to) a serial link, to a set of remote antenna units in the coverage zone. A set of remote antenna units can include one or more antenna units.

In some aspects, the base station router can include features of an intelligent point of interface ("I-POI") system. A POI system can include a device or group of devices configured to interface directly with a base station or a group of base stations. Such devices can include (but are not limited to) a signal leveler, a signal attenuator, a signal splitter, a signal combiner, a receive-and-transmit signal combiner, a splitter, a multiplexer, and the like. An i-POI system can provide an

intelligent interface for communicating with a base station or group of base stations. Providing an intelligent interface can include controlling the leveling or attenuation based on base station signal conditions. An intelligent interface can also include analyzing incoming signals and determination of system level parameters based on the analysis.

A coverage zone can include one or more remote antenna units that provide signal coverage to an area. The remote antenna units in a coverage zone can communicate with the base station router over a link. Examples of such a link can include (but are not limited to) a serial link, a digital link, an analog link, etc. The remote antenna units can wirelessly communicate the signals from the base station router to wireless devices positioned in a coverage zone.

The base station router can redistribute capacity by changing which sectors are provided to which coverage zones. A sector can represent an amount of telecommunication capacity that can be allocated to wireless devices in one or more coverage zones. Increasing the bandwidth associated with a sector can increase the capacity represented by the sector. A sector can include one or more analog RF channels or digital signals representing RF channels, signals in one or more analog or digital RF bands, and/or one or more multiple-input and multiple-output ("MIMO") data streams.

The signals of a sector can be provided to a coverage zone via the base station router. The signals of a sector can also be distributed to two or more coverage zones providing coverage to a physical area. All of the signals of a sector can be radiated by the remote antenna units of one or more coverage zones included in a physical area.

In some aspects, a first coverage zone can partially overlap a second coverage zone. The base station router can redistribute capacity such that the capacity requirements or capacity density match the provided capacity. In other aspects, a first coverage zone can be a subdivision of a second coverage zone. The base station router can distribute capacity to subdivide a larger cell into smaller cells. In other aspects, a first coverage zone and a second coverage zone may not overlap. Capacity can be redistributed in whole or in part from the first coverage zone to the second coverage zone based on the second coverage zone having a greater capacity requirement (i.e., a larger number of mobile devices).

Increasing the number of coverage zones to which a sector is distributed can decrease the capacity density of each coverage zone. Decreasing the number of coverage zones to which a sector is distributed can increase the capacity density of each zone. The level of the capacity density can determine how many mobile devices can use telecommunication services and capacity in a given coverage zone. In some aspects, a maximum capacity density can be achieved by distributing the sector to a minimum size coverage zone. A non-limiting example of a minimum size coverage zone is a single remote unit or a single antenna unit.

The base station router can shift capacity by reducing the number of coverage zones to which a sector is distributed. By distributing the sector to fewer coverage zones (and thus a smaller physical area), the capacity density (i.e., the capacity per physical area) is increased. The number of coverage zones to which a base station router distributes sectors can be greater than or equal to the number of sectors distributed by the base station router.

An example of shifting capacity can include modifying the respective capacity in two coverage zones. More wireless devices may be concentrated in a first zone than are concentrated in a second coverage zone. The base station router can sub-divide a combined coverage zone including both the first coverage zone and the second coverage zone. The base station router can shift the distribution of capacity between the two coverage zones such that the capacity is distributed only to the first coverage zone rather than the combined first and second coverage zones.

Sectors from base stations associated with different telecommunications system operators can be distributed to one or more common coverage zones. The base station router can allocate the respective capacities of different telecommunications system operators among coverage zones such that different capacity densities are associated with different telecommunication system operators within a specific coverage zone. For example, four sectors of a first telecommunication system operator may be distributed among six coverage zones and two sectors of a second telecommunication system operator may be distributed among the same six coverage zones. The capacity density for the first telecommunication system operator thus exceeds the capacity density for the second telecommunication system operator in the same physical area that includes the six coverage zones.

A base station router can include donor interface cards, a backplane, and zone interface cards. A donor interface card can interface with a base station for bi-directional communication of sector signals and can provide the signals of a sector to the backplane. The backplane can route signals from donor cards to one or more zone interface cards. The base station router can provide signals of a sector via the zone interface card to one or more remote antenna units in a coverage zone. The communication with the backplane can include using either analog signals formats or digital signal formats. In some aspects, the routing function can be implemented on each zone interface card by a selection mechanism from multiple signals provided by the backplane. In other aspects, the routing function can be implemented by a selection mechanism residing on the backplane. The routing function can be pre-determined, configurable by an operator, or configurable by an algorithm executed by a processing device.

A base station router can also determine the location of a specific wireless device within the environment of the DAS. The base station router can communicate with a base station to determine an identifier for the specific wireless device. The base station router can also determine a channel over which the specific wireless device is communicating. A channel can include a connection, such as a transmit and receive frequency, over which a wireless device and a base station can communicate via the DAS. The base station router can determine a coverage zone to which the channel is being provided and a specific remote antenna unit in a coverage zone that is associated with the wireless device. The base station router can determine which remote antenna unit is associated with the wireless device by determining the received signal strength indicator "RSSI") of an uplink signal from the wireless device at each remote antenna unit. The remote antenna unit associated with the wireless device receives the uplink signal at the strongest RSSI. The base station router can access a data file that includes the location of each remote antenna unit to determine, based on which remote antenna unit is communicating with the wireless device, the location of the wireless device.

A base station router can also include a separate interface card for connecting the base station router to another base station router in the DAS. Interconnecting multiple base station routers can increase the number of coverage zones supported by a sector. The interconnections between multiple base station routers can use different media. Examples of interconnections between base station routers can include (but are not limited to) wired connections, optical connections, free-air paths, etc. Examples of wired connections can

include (but are not limited to) coaxial cables and twisted pair cables. Examples of optical connections can include optical fiber or other optical guides. Examples of free-air paths can include using radiated RF signals or radiated optical signals.

Detailed descriptions of these illustrative examples are discussed below. These illustrative examples are given to introduce the reader to the general subject matter discussed here and are not intended to limit the scope of the disclosed concepts. The following sections describe various examples with reference to the drawings in which like numerals indicate like elements, and directional descriptions are used to describe the illustrative examples but, like the illustrative examples, should not be used to limit the present invention.

FIG. **1** depicts a DAS **10** having a base station router **14** in communication with base stations **12***a-n* and with remote antenna units **18***a-p* of coverage zones **16***a-f*. The DAS **10** can be positioned in an area, such as a stadium, office building or other confined environments, to extend wireless communication coverage of the base stations **12***a-n*. Different base stations **12***a-n* can be associated with different sectors of one telecommunication system operator and/or be associated with different sectors of different telecommunication system operators.

In the downlink direction, the DAS **10** can receive signals from the base stations **12***a-n* via a wired or wireless communication medium. Downlink signals can include signals provided from the base stations **12***a-n* and radiated into the coverage zones **16***a-f* by the remote antenna nits **18***a-p*. The downlink signals received by the base station router **14** can be associated with one or more sectors from the base stations **12***a-n*.

The base station router **14** can communicate sectors between the base stations **12***a-n* and the coverage zones **16***a-f*. Each of the coverage zones **16***a-f* can correspond to a physical area within the environment of the DAS **10**. The DAS **10** can distribute a sector to a single physical area that includes multiple coverage zones. The remote antenna units in the coverage zones of the physical area can radiate the signals of the sector distributed to the physical area. In some aspects, a remote antenna unit can include signal processing circuitry. In other aspects, a remote antenna unit can be an antenna without any additional circuitry.

The base station router **14** can include circuitry for processing the signals communicated between the base stations **12***a-n* and the coverage zones **16***a-f*. Processing the signals can include transforming the signals received from the base stations **12***a-n* into a digital format. Processing the signals can also include filtering downlink signals from the base stations **12***a-n*.

The base station router **14** can also include circuitry for routing signals from the base stations **12***a-n* to the remote antenna units **16***a-f*. Routing the signals can include combining the signals of the sectors from one or more base stations **12***a-n*. In some aspects, the base station router **14** can combine signals from multiple sectors associated with a common telecommunication system operator if the signals are associated with different frequency bands or different non-overlapping segments of the same RF band. Routing the signals can also include transforming the signals into a format used by the remote antenna units (e.g., analog RF signals), and providing the combined signals to the remote antenna units for specific coverage zones.

In some aspects, the base station router **14** can communicate with both the base stations **12***a-n* and the remote antenna units **18***a-p* using analog RF signals. The base station router **14** can transform analog RF signals from the base stations **12***a-n* into digital signals for processing, such as by routing the digital signals and combining the digital signals together. The base station router can transform the digital signals into analog RF signals before providing the signals to the remote antenna units **18***a-p*.

In other aspects, the base station router **14** can communicate digital signals with the base stations **12***a-n* and communicate analog RF signals with the remote antenna units **18***a-p*. Processing signals from the base stations **12***a-n* can include converting signals in one digital format used by the base stations **12***a-n* into a different digital format used by the base station router **14**. For example, the base station router **14** may convert digital signals in different standardized formats, such as Common Public Radio Interface ("CPRI") or Open Radio Equipment Interface ("ORI"), to a common digital format to process the signals.

In other aspects, the base station router **14** can communicate digital signals with the remote antenna units **18***a-p*. Processing signals from the base stations **12***a-n* can include converting signals in one digital format used by the base stations **12***a-n* into a different digital format used by the remote antenna units **18***a-p*.

For example, a base station router **14** communicating with remote antenna units **18***a-p* may receive downlink signals that are digital signals in different standardized formats from the base stations **12***a-n*. The base station router **14** can convert the downlink signals to digital data streams in a common format and combine the digital data streams into a combined digital data stream. The base station router **14** can provide the combined digital data stream to the remote antenna units **18***a-p*. Sectors provided as MIMO data streams, for example, can be combined with other digital data streams and provided to a common remote antenna unit. The remote antenna units **18***a-p* can de-multiplex the combined digital data stream into digital data streams representing individual downlink signals. The remote antenna units **18***a-p* can convert the digital data streams signals to downlink analog RF signals and radiate the downlink analog RF signals to the wireless devices. For each downlink signal, the base station router **14** can receive a reference clock signal from the base station at which the downlink signal originated. The base station router can use the reference clock signal to synchronize the remote antenna units **18***a-p* radiating a downlink signal with the base station providing the downlink signal.

In other aspects, the base station router **14** can receive downlink signals that are analog signals from base stations **12***a-n*. The analog signals can include MIMO signals as streams, or more than one sector of the same operator in the same band segment of the same RF band. At least one of the signals, which may be a second stream of a MIMO signal or a second sector, can be translated in frequency in the base station router **14**, and transported over the same communication link as a first signal. A remote antenna unit may be associated with circuitry that can translate the second stream of the MIMO signal or the second sector back to an original frequency. If the signal is the second MIMO stream, the signal can be radiated with the other streams on the same antenna element. If the signal is the second sector, the signal can be radiated by a separate antenna element. A reference clock signal can be provided by the base station router **14** to the DAS **10** to allow the circuitry associated with the remote antenna unit to be synchronized in frequency with the first conversion of the signal.

The coverage zones **16***a-f* can include the areas to which the DAS **10** extends signal coverage of the base stations **12***a-n*. For example, if the DAS **10** is positioned in a stadium, the coverage zones **16***a-f* may correspond to different sections of the stadium and the parking lot surrounding the stadium. In

another example, if the DAS **10** is positioned in an office building, each of the coverage zones **16***a-f* may correspond to a different floor of the building.

Each of the coverage zones **16***a-f* can each include one or more remote antenna units **18***a-p*. The remote antenna units **18***a-p* can service a number of different wireless devices, such as cellular phones, operating in the environment of the DAS **10**. The remote antenna units of a particular coverage zone can receive the same group of signals from the base station router **14**. The remote antenna units in the coverage zone can radiate the group of signals, such as a sector, received from the base station router **14** to the coverage zone. The remote antenna units **18***a-p* can communicate with the base station router **14** via any communication medium capable of carrying signals between the base station router **14** and the remote antenna units **18***a-p*. Examples of a suitable communication medium include copper wire (such as a coaxial cable), optical fiber, and microwave or optical link. The link can transport the signals in analog or in digitized form. As depicted in FIG. **1**, different coverage zones can include different numbers of remote antenna units.

In some aspects, the remote antenna units **18***a-p* can receive analog RF signals from the base station router **14**. In other aspects, the remote antenna units **18***a-p* can each be configured to receive digital signals from the base station router **14** and convert the digital signals to analog RF signals prior to radiating the signals to wireless devices in the coverage zone. The base station router **14** can also generate control signals to control and configure the remote antenna units **18***a-p*. The control signals can be combined with downlink signals provided to the remote antenna units **18***a-p*.

In the uplink direction, the base station router can receive uplink signals from remote antenna units **18***a-p*. Uplink signals can include signals received from wireless devices in the coverage zones **16***a-f*. The base station router **14** can process uplink signals received from the remote antenna units **18***a-p*. Processing the uplink signals can include converting the uplink signals to a digital format, filtering the digital uplink signals, adding uplink signals from different zones, and routing. The digital uplink signals can be converted to a format compatible with a given base station, such as analog RF or a standardized digital format, and routed to the base station communicating with the respective wireless devices in a coverage zone.

FIG. **2** depicts an example base station router **14** having an interface section **101**, an output section **103**, and a backplane **104**. The interface section **101** can include donor interface cards **102***a-n*. The output section **103** can include zone interface cards **106***a-n*.

In the downlink direction, the donor interface cards **102***a-n* can transform signals received from the base stations **12***a-n*, such as RF signals, into one or more digital data streams. A digital data stream can include a series of digital samples representing a signal. In some aspects, transforming the signals received from the base stations **12***a-n* can include separately converting analog RF signals into digital data streams by separate analog-to-digital converters. In other aspects, transforming the signals can include converting digital signals in different standardized formats, such as CPRI or ORI data packets, from different base stations into a common digital format for processing at the backplane **104**. Certain systems and processes that can be used to do so are described in U.S. Ser. No. 13/493,060, filed Jun. 11, 2012 and titled "Distributed Antenna System Interface for Processing Digital Signals in a Standardized Format."

In the uplink direction, the donor interface cards **102***a-n* can transform digital data streams into uplink signals to be provided to the base stations **12***a-n*. The donor interface cards **102***a-n* can also include circuitry, such as band pass filters, for filtering downlink and uplink signals. Filtering the downlink and uplink signals can eliminate undesirable signals. The filters of the donor interface cards **102***a-n* can pass desired signals within a frequency band and reject or attenuate undesirable signal components.

In the downlink direction, the digital data streams from the donor interface cards **102***a-n* can be provided to the backplane **104**. The backplane **104** can include configurable digital signal processing circuitry for processing signals from the donor interface cards **102***a-n*. A non-limiting example of the configurable digital processing circuitry is a field-programmable Gate Array ("FPGA"). The backplane **104** can combine the digital data streams into serialized data streams via the configurable digital signal processing circuitry. In some aspects, the backplane **104** can include a multiplexor device configured for combining the digital data streams by multiplexing parallel digital data streams into a digital data stream. In other aspects, the backplane **104** can include a summing device configured for combining the digital data streams by summing or adding digital data streams.

The combined data streams from the backplane **104** can be provided to the zone interface cards **106***a-n*. The backplane **104** can also provide combined digital data streams representing the signals of multiple sectors to a single zone interface card. Each of the zone interface cards **106***a-n* can transform the combined data streams into downlink signals to be provided to the remote antenna units of one or more coverage zones. Each of the zone interface cards **106***a-n* can simultaneously provide the downlink signals to the remote antenna units of the respective coverage zones. In some aspects, the downlink signals can include analog RF signals of sectors provided from base stations to be radiated by the remote antenna units of a respective coverage zone. In other aspects, the downlink signals can include digital signals of sectors provided from base stations to be provided to remote antenna units of a respective coverage zone. The remote antenna units can convert the digital signals to analog RF signals and radiate the RF signals into the coverage zones.

In an uplink direction, the zone interface cards **106***a-n* can receive uplink signals from one or more remote antenna units. The uplink signals can be converted to digital data streams and provided to the backplane **104**. The backplane **104** can combine the digital data streams into serialized data streams via the configurable digital signal processing circuitry. In some aspects, combining the digital data streams can include multiplexing parallel digital data streams into a digital data stream. In other aspects, combining the digital data streams can include summing or adding digital data streams. The backplane **104** can route the appropriate digital data streams representing uplink signals to the appropriate donor interface card.

The base station router **14** can also include a controller **108**. The controller **108** can re-configure the configurable digital signal processing circuitry of the backplane **104** to change the routing of signals from the base stations **12***a-n* to the coverage zone **16***a-f*. In some aspects, as depicted in FIG. **2**, the controller **108** can be disposed in the base station router **14**. In other aspects, the controller **108** can be disposed in a separate device external to and in communication with the base station router **14**.

A block diagram of an example controller **108** is depicted in FIG. **8**. The controller **108** can include a processor **202** that can execute code stored on a computer-readable medium, such as a memory **204**, to cause the controller **108** to configure the base station router **14**. Non-limiting examples of a

processor **202** include a microprocessor, a peripheral interface controller ("PIC"), an application-specific integrated circuit ("ASIC"), a field-programmable gate array ("FPGA"), or other suitable processor. The processor **202** may include one processor or any number of processors.

The processor **202** can access code stored in memory **204** via a bus **206**. The memory **204** may be any non-transitory computer-readable medium capable of tangibly embodying code and can include electronic, magnetic, or optical devices. Examples of memory **204** include random access memory (RAM), read-only memory (ROM), magnetic disk, an ASIC, a configured processor, or other storage device. The bus **206** may be any device capable of transferring data between components of the controller **108**. The bus **206** can include one device or multiple devices.

Instructions can be stored in memory **204** as executable code. The instructions can include processor-specific instructions generated by a compiler and/or an interpreter from code written in any suitable computer-programming language, such as C, C++, C#, Visual Basic, Java, Python, Perl, JavaScript, and ActionScript.

The instructions can include a configuration engine **210**. When executed by the processor **202**, the configuration engine **210** can cause the controller **108** to redistribute capacity in the DAS **100**, as explained in more detail below. The controller **108** can receive data inputs through input/output ("I/O") interface **208** and store in memory **204**. The configuration engine **210** can also provide data outputs via the I/O interface **208**. The configuration engine **210** can also execute a scheduling algorithm.

The example configuration for the controller **108** is provided to illustrate configurations of certain aspects. Other configurations may of course be utilized.

The processor **202** can communicate data describing the routing of signals by the base station router **14**. The data can be communicated via the I/O interface **208** through a graphical user interface or from an automation algorithm stored in the memory **204** for determining the demand on each of the coverage zones.

The configuration engine **210** can include a configuration management function for determining how to redistribute signal capacity among coverage zones. The configuration engine **210** can execute the configuration management function in response to the detection of a traffic indicator. A traffic indicator can include data describing or otherwise corresponding to a number of mobile devices in each coverage zone. Examples of a traffic indicator can include a scheduled event of a game, concert, or other type of event, a scheduled sequence of events with pre-game, game, and post-game configurations, traffic measurements passing low or high thresholds, base transceiver station failure events, and loss of capacity due to high inter-sector interference. In some aspects, the controller **108** can detect traffic and perform measurements independent of a wireless network standard and protocol.

The configuration engine **210** can also include a report manager function for generating reports on traffic, spurious signals, usage, and other types of information. The processor **202** can execute the configuration engine **210** so as to configure the controller **108** to implement any process for measuring uplink signals for traffic and other types of information, and reporting the information. Certain systems and processes that can be used to do so are described in U.S. Ser. No. 12/778,312, filed May 12, 2010 and titled "System and Method for Detecting and Measuring Uplink Traffic in Signal Repeating Systems."

In some aspects, a base station router **14** can determine a location of a specific wireless device within the environment in which the DAS **10** is deployed. The base station router **14** can communicate with one of the base stations **12***a-n* to determine an identifier for the specific wireless device. For example, the configure engine **210** can configure the processor of the controller **108** to generate a request for such an identifier to be provided to a base station. An identifier for a wireless device can include any attributes of a communication link between a base station and a wireless device used to identify the wireless device. For example, the identifier can include the transmit and receive frequencies assigned to a wireless device used in frequency division multiple access schemes, a communication time slot assigned to the wireless device used in time division multiple access schemes, and/or a spreading code assigned to a wireless device in a code division multiple access scheme.

The base station router **14** can determine a channel over which the specific wireless device is communicating. The channel can include a connection, such as a transmit and receive frequency or a band of transmit and receive frequencies, over which a wireless device and a base station can communicate via the DAS. A sector of a base station received by a donor card of the base station router **14** can include the channel. The base station router **14** can determine a coverage zone to which the channel is being provided by determining which sector includes the channel and which coverage zone is receiving the sector. For example, the processor **202** can execute the configuration engine **210** to retrieve data describing the assignment of sectors to coverage zones and the respective channels over which the respective sectors are provided to the coverage zones. FIGS. **4** and **5** depict a model of the base station router **14** redistributing capacity among coverage zones **16***a-f*. The base station router **14** can receive signals from base stations **12***a-n* corresponding to sectors **302***a-c*. The base station router **14** can provide the sectors **302***a-c* to the respective coverage zones **16***a-f*. Each of the coverage zones **16***a-f* can include a subset of the remote antenna units, depicted as darkened circles in FIGS. **4** and **5**, of the DAS. Increasing the number of coverage zones to which each of the sectors **302***a-c* is distributed can decrease the capacity density of the respective coverage zones. The base station router **14** can redistribute capacity by changing which sectors **302***a-c* are provided to which coverage zones **16***a-f*, respectively.

FIG. **4** depicts the base station router **14**, according to an initial configuration, providing sectors **302***a-c* to the coverage zones **16***a-f*. The base station router **14** can be configured to communicate the signals of sector **302***a* to the coverage zones **16***a-d*, the signals of sector **302***b* to the coverage zone **16***e*, and the signals of sector **302***c* to the coverage zone **16***f*. The capacity of sector **302***a* is divided among the coverage zones **16***a-d*, while the entire capacity of sector **302***b* is provided to coverage zone **16***e* and the entire capacity of sector **302***c* is provided to coverage zone **16***f*. Accordingly, the capacity density of each of the coverage zones **16***a-d* is less than the capacity density of each of the coverage zones **16***e-f*.

The signals of a sector can be divided among the coverage zones. For example, a first wireless device in the coverage zone **16***a* may communicate using a first RF channel of sector **302***a* and a second wireless device in the coverage zone **16***a* may communicate using a second RF channel of sector **302***a*. The first and second RF channels of the sector **302***a* may be included in a common frequency band but be distributed to different coverage areas.

For example, a DAS **10** may service a stadium and a parking lot surrounding the stadium, with the coverage zones **16***a-d* corresponding to different sections of the stadium and the coverage zones **16***e-f* corresponding to the parking lot.

Before an event hosted in the stadium begins, fewer wireless devices may be concentrated in the stadium than in the parking lot. The coverage zones **16***a-d* may therefore require less capacity than the coverage zones **16***e*, **16***f*. Accordingly, the base station router **14** can be configured to provide the sector **302***a* to the coverage zones **16***a-d*, the sector **302***b* to coverage zone **16***e*, and the sector **302***c* to coverage zone **16***f*. Providing a single sector **302***a* to the coverage zones **16***a-d* inside the stadium can provide sufficient capacity density for each of the coverage zones **16***a-d*. Providing the sectors **302***b*, **302***c* to the coverage zone **16***e* inside the stadium can provide sufficient capacity density for each of the coverage zones **16***a-d*.

The base station router **14** can be re-configured via the controller **108** in response to changes concentration of wireless devices in the respective coverage zones. FIG. **5** depicts the base station router **14** providing sectors **302***a-c* to the coverage zones **16***a-f* according to a subsequent configuration of the base station router **14**. For example, if the DAS **10** services a stadium and the surrounding parking lot, more wireless devices will be concentrated inside the stadium than in the parking lot after an event begins. The base station router **14** can be reconfigured such that the sector **302***a* is provided to the coverage zone **16***a*, the sector **302***b* is provided to the coverage zones **16***b*, **16***c*, and the sector **302***a* is provided to the coverage zones **16***d-f*. The configuration of base station router **14** depicted in FIG. **5** thus increases the capacity density of the coverage zones **16***a-d* as compared to the configuration of the base station router **14** depicted in FIG. **3**.

Although FIGS. **4** and **5** depict three sectors provided to six coverage zones, multiple sectors can be provided to a single coverage zone. For example, the signals of a first sector associated with a first telecommunication system operator and the signals of a second sector associated with a second telecommunication system operator can be combined and distributed to the same coverage zone or group of coverage zones. The number of coverage zones to which a base station router distributes sectors can be greater than or equal to the number of sectors distributed by the base station router.

FIG. **6** depicts an aspect of a DAS **10'** that includes a base station router **14***a* in communication with other base station routers **14***b*, **14***c*. The interconnected base station routers **14***a-c* can communicate via any suitable communication medium, such as (but not limited to) copper cable or optical link. The base station router **14***a* can provide the sectors received by the base station router **14***a* to the base station routers **14***b*, **14***c*. The sectors can be provided as digital data streams. By providing digital data streams to the base station routers **14***b*, **14***c* representing the sectors received by the base station router **14***a*, the DAS **10'** can be expanded to provide coverage to a larger environment without requiring additional connections between the base stations **12***a-n* and the base station routers **14***b*, **14***c*.

FIG. **7** depicts an example base station router **14'** having an output section **103'** that includes one or more base station router interface cards **402***a-n*. The base station router **14'** can communicate with other base station routers via the base station router interface cards **402***a-n*. The base station router **14'** can either provide sectors to coverage zones via the zone interface cards **106***a-n* or provide sectors to other base station routers via one or more base station router interface cards **402***a-n*. Examples of the base station router interface cards **402***a-n* can include copper or optical interface cards.

In additional or alternative aspects, a base station router can include a spectrum analyzer. FIG. **8** depicts an example base station router **14"** having a spectrum analyzer **502** that can analyze uplink and downlink signals. In some aspects, the spectrum analyzer **502** can be a separate device disposed in the base station router **14"**, as depicted in FIG. **8**. In other aspects, the spectrum analyzer **502** can be disposed in one or more of the donor interface cards **102***a-n*, the backplane **104**, and/or the zone interface cards **106***a-n*.

The spectrum analyzer **502** can determine the frequencies of the component signals included in the uplink and downlink signals. The spectrum analyzer **502** can store data representing the spectrum of uplink and downlink signals in a memory. The memory can be the memory **208** of the controller **108** or an external memory device accessible by the controller **108** via the I/O interface **208**. The controller **108** can use the spectrum of the uplink and downlink signals for additional processing of the uplink and downlink signals. Additional processing can include determining the frequencies being used in a respective coverage zone. The controller **108** can use data describing the frequencies in the respective coverage zones to determine whether to redistribute the capacity of the DAS. Additional processing can also include identifying spurious signals or other undesirable signals, such as noise recovered by the remote antenna units that can distort uplink signals, that can be removed or otherwise filtered using programmable band pass filters disposed in the base station router.

In additional or alternative aspects, each of the zone interface cards **106***a-n* can include one or more reference receiver inputs. FIG. **9** depicts a block diagram of the base station router **14** having zone interface card **106'** with a reference receiver input **602**.

The zone interface card **106'** can communicate via the reference receiver input **602** with a detection device **604** communicatively coupled to each of the remote antenna units included in a coverage zone, such as the remote antenna units **16***a-c* of the coverage zone **16***a*. In some aspects, the detection device **604** can be a switch matrix that can allow a connection to the signals of individual remote antenna units prior to the signals being combined.

By communicating via the reference receiver input **602** with a detection device **604**, the base station router **14** can detect the geographic location of a particular wireless device in a coverage zone of the DAS **10**. The detection device **604** can determine the RSSI of an uplink signal from the wireless device at each remote antenna unit. The base station router **14** can communicate with the detection device **604** to identify which remote antenna unit receives the uplink signal at the strongest RSSI. The base station router **14** can determine that the remote antenna unit receiving the uplink signal at the strongest RSSI is the remote antenna unit associated with the wireless device. The processor **202** of the controller **108** base station router **14** can access a data file stored in the memory **204**. The data file can include data describing the geographical location of each remote antenna unit. The processor **202** can determine the geographical location of the wireless device from the data file based on the geographical location of the remote antenna unit that is associated with the wireless device.

The reference receiver input **602** can also provide an output monitoring function for RF or laser pre-distortion. The base station router **14** can provide an identifier for a wireless device, such as a timeslot or spreading code, to the detection device **604** via the reference receiver input **604** of the zone interface card associated with the zone to which the channel is being provided. The detection device **604** can determine which of the remote antenna units receives uplink signals according to the attributes specified in the identifier for the wireless device, such as the time slot or spreading code.

Although a single zone interface card **106'** is depicted in FIG. **9**, the base station router **14** can include any number of

zone interface cards. Although the zone interface card **106'** is depicted as having a single reference receiver input **602**, the zone interface card **106'** can include any number of receiver inputs.

The foregoing description, including illustrated examples, of the invention has been presented only for the purpose of illustration and description and is not intended to be exhaustive or to limit the invention to the precise forms disclosed. Numerous modifications, adaptations, and uses thereof will be apparent to those skilled in the art without departing from the scope of this invention. Aspects and features from each example disclosed can be combined with any other example.

The invention claimed is:

1. A base station router configured for being disposed in a distributed antenna system, the base station router comprising:

a first interface device configured for receiving sectors from a base station, each sector comprising a plurality of communication channels to be radiated to mobile devices in coverage zones managed by the base station router and representing an amount of telecommunication capacity for communicating information between the mobile devices and the base station;

digital signal processing circuitry configured for managing an availability of the sectors for the coverage zones;

a second interface device configured for communicating with a remote base station router configured for managing an additional availability of additional sectors for remote coverage zones; and

a controller configured for:

redistributing the availability of at least one sector from a first coverage zone of the coverage zones managed by the base station router to a second coverage zone of the coverage zones managed by the base station router, and

redistributing, via the second interface device, the availability of at least one additional sector from the received sectors between at least one of the coverage zones managed by the base station router and at least one of the remote coverage zones managed by the remote base station router, wherein redistributing the availability of the at least one additional sector decreases a capacity density of at least one coverage zone managed by the base station router and increases a capacity density of at least one remote coverage zone managed by the remote base station router.

2. The base station router of claim **1**, wherein each communication channel corresponds to a signal configured for carrying data.

3. The base station router of claim **1**, wherein the plurality of communication channels comprises a plurality of RF channels.

4. The base station router of claim **1**, wherein the plurality of communication channels comprises a plurality of digital signals, wherein each digital signal represents an RF channel.

5. The base station router of claim **1**, wherein redistributing the availability of the at least one sector comprises increasing the number of communication channels provided to a first remote antenna unit in the first coverage zone and decreasing the number of communication channels provided to a second remote antenna unit in the second coverage zone.

6. The base station router of claim **1**, wherein the controller is further configured for executing a scheduling algorithm outputting a traffic indicator and redistributing the availability of the at least one sector from the first coverage zone to the second coverage zone in response to the traffic indicator, wherein the traffic indicator comprises a schedule indicator stored in a tangible memory device.

7. The base station router of claim **1**, wherein the controller is further configured for identifying a spectrum of signals in the first coverage zone and the second coverage zone, determining a traffic indicator based on the spectrum of signals, and redistributing the availability of the at least one sector from the first coverage zone to the second coverage zone in response to the traffic indicator, wherein the traffic indicator comprises a quantity of mobile devices in each coverage zone.

8. The base station router of claim **1**, further comprising:

an interface module configured for transforming signals associated with a plurality of sectors into digital data streams;

wherein the digital signal processing circuitry is further configured for:

combining a first subset of the digital data streams associated with a first sector into a first combined digital data stream;

combining a second subset of the digital data streams associated with a second sector into a second combined digital data stream; and

providing the first combined digital data stream and the second combined digital data stream to a first zone interface card configured for communicating with a first remote antenna unit in the first coverage zone and a second zone interface card configured for communicating with a second remote antenna unit in the second coverage zone.

9. A distributed antenna system, comprising:

a first remote antenna unit configured for wirelessly communicating with mobile devices located in a first coverage zone;

a second remote antenna unit configured for wirelessly communicating with mobile devices located in a second coverage zone;

a base station router configured for receiving a sector from a base station and distributing an availability of the sector to the first remote antenna unit and the second remote antenna unit, the sector comprising a plurality of communication channels and representing an amount of telecommunication capacity; and

a remote base station router configured for managing an availability of additional sectors for remote coverage zones,

wherein the base station router is further configured for redistributing the availability of at least one additional sector between at least one of the first and second coverage zones managed by the base station router and at least one of the remote coverage zones managed by the remote base station router, wherein redistributing the availability of the at least one additional sector decreases a capacity density of at least one of the first and second coverage zones managed by the base station router and increases a capacity density of at least one remote coverage zone managed by the remote base station router.

10. The distributed antenna system of claim **9**, wherein each communication channel corresponds to a signal configured for carrying data.

11. The distributed antenna system of claim **9**, wherein the plurality of communication channels comprises a plurality of RF channels.

12. The distributed antenna system of claim **9**, wherein the plurality of communication channels comprises a plurality of digital signals, wherein each digital signal represents an RF channel.

13. The distributed antenna system of claim **9**, wherein redistributing the availability of at least one sector comprises increasing the number of communication channels provided to the first remote antenna unit and decreasing the number of communication channels provided to the second remote antenna unit.

14. The distributed antenna system of claim **9**, wherein the base station router is further configured for executing a scheduling algorithm outputting a traffic indicator and redistributing the availability of an additional sector from the first coverage zone to the second coverage zone in response to a traffic indicator, wherein the traffic indicator comprises a schedule indicator stored in a tangible memory device.

15. The distributed antenna system of claim **9**, wherein the base station router is further configured for:

identifying a spectrum of signals in the first coverage zone and the second coverage zone;

determining a traffic indicator based on the spectrum of signals; and

redistributing the availability of the at least one sector from the first coverage zone to the second coverage zone in response to a traffic indicator, wherein the traffic indicator comprises a quantity of mobile devices in each coverage zone.

16. The distributed antenna system of claim **9**, further comprising:

a plurality of remote antenna units in the first coverage zone; and

a detection device configured for communicating with a remote antenna unit and detecting a received signal strength indicator associated with an uplink signal transmitted by an identified mobile device;

wherein the base station router comprises a zone interface card configured for communicating with the detection device via a reference receiver input and is configured for determining a geographic location of the identified mobile device based on the respective signal strength of the received signal strength indicator.

17. A method, comprising:

distributing, by a base station router, an availability of a sector received from a base station to a first coverage zone, the sector comprising a plurality of communication channels and representing an amount of telecommunication capacity;

redistributing, by the base station router, the availability of the sector from the first coverage zone to a second coverage zone; and

redistributing, by the base station router, an additional availability of at least one additional sector received from the base station between at least one of the coverage zones managed by the base station router and at least one remote coverage zone managed by a remote base station router, wherein redistributing the availability of the at least one additional sector decreases a capacity density of at least one coverage zone managed by the base station router and increases a capacity density of the at least one remote coverage zone managed by the remote base station router.

18. The method of claim **17**, wherein redistributing the availability of at least one sector comprises increasing the number of communication channels provided to a first remote antenna unit in the first coverage zone and decreasing the number of communication channels provided to a second remote antenna unit in the second coverage zone.

19. The method of claim **17**, further comprising detecting a traffic indicator by executing a scheduling algorithm outputting the traffic indicator; and

redistributing the availability of the sector from the first coverage zone to the second coverage zone in response to detecting the traffic indicator, wherein the traffic indicator comprises a schedule indicator stored in a tangible memory device.

20. The method of claim **17**, further comprising redistributing the availability of the sector from the first coverage zone to the second coverage zone in response to detecting a traffic indicator, wherein detecting the traffic indicator comprises:

identifying a spectrum of signals in the first coverage zone and the second coverage zone; and

determining the traffic indicator based on the spectrum of signals, wherein the traffic indicator comprises a quantity of mobile devices in each coverage zone.

* * * * *