US008104089B1

(12) **United States Patent**
Guo et al.

(10) **Patent No.: US 8,104,089 B1**
(45) **Date of Patent: Jan. 24, 2012**

(54) **TRACKING MEMORY MAPPING TO PREVENT PACKERS FROM EVADING THE SCANNING OF DYNAMICALLY CREATED CODE**

(75) Inventors: **Fanglu Guo**, Los Angeles, CA (US); **Tzi-Cker Chiueh**, Culver City, CA (US)

(73) Assignee: **Symantec Corporation**, Mountain View, CA (US)

(*) Notice: Subject to any disclaimer, the term of this patent is extended or adjusted under 35 U.S.C. 154(b) by 955 days.

(21) Appl. No.: **11/967,565**

(22) Filed: **Dec. 31, 2007**

(51) **Int. Cl.**
G06F 12/14 (2006.01)
G06F 11/30 (2006.01)

(52) **U.S. Cl.** **726/24**; 726/23; 726/26; 713/188; 713/193

(58) **Field of Classification Search** 726/24
See application file for complete search history.

(56) **References Cited**

U.S. PATENT DOCUMENTS

7,296,274	B2 *	11/2007	Cohen et al.	719/315
7,836,504	B2	11/2010	Ray et al.	
2005/0172337	A1 *	8/2005	Bodorin et al.	726/22
2006/0174319	A1 *	8/2006	Kraemer et al.	726/1
2007/0106981	A1 *	5/2007	Bird	717/127
2008/0040710	A1 *	2/2008	Chiriac	717/136
2008/0229416	A1 *	9/2008	Stewart et al.	726/22
2009/0049550	A1 *	2/2009	Shevchenko	726/23

FOREIGN PATENT DOCUMENTS

WO WO 2007071999 A1 * 6/2007

OTHER PUBLICATIONS

Adrian Stepan, *Improving proactive detection of packed malware*, [online], 2006, retrieved from the URL:<http://www.virusbtn.com/virusbulletin/archive/2006/03/vb200603-pa...>.
Blackhat USA 2007, Black Hat USA 2007 Topics and Speakers, [online], 2007, retrieved from the URL:<http://www.blackhat.com/html/bh-usa-07-speakers.html#Qu...>.
Joe Stewart, *Unpacking with OllyBonE*, [online], Jan. 3, 2007, retrieved from the URL:<http://www.joestewart.org/ollybone/tutorial.html>.

* cited by examiner

Primary Examiner — Taghi Arani
Assistant Examiner — Mohammad Rahman
(74) *Attorney, Agent, or Firm* — Fenwick & West LLP

(57) **ABSTRACT**

To detect possible malicious code that is unpacked at runtime before it is executed, antivirus software requires that any dynamically created code be scanned before it can be executed by a host computer system. This requirement may be enforced by requiring memory pages to be either executable or writable, but not both. Before changing from writable but not executable to executable but not writable, the page is scanned for malicious code. To prevent packers from evading this scanning, a countermeasure tracks the memory mapping in the host system to enforce consistency in the protection settings for all memory spaces that are mapped to the same physical memory page.

18 Claims, 8 Drawing Sheets

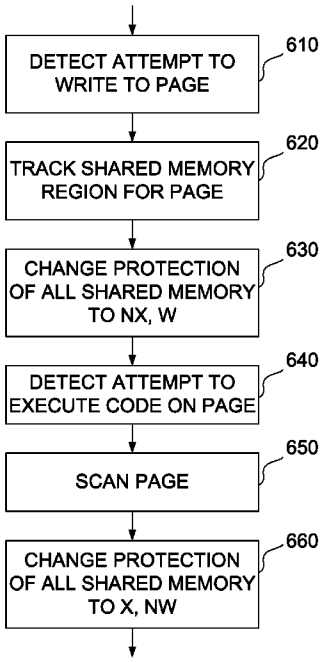

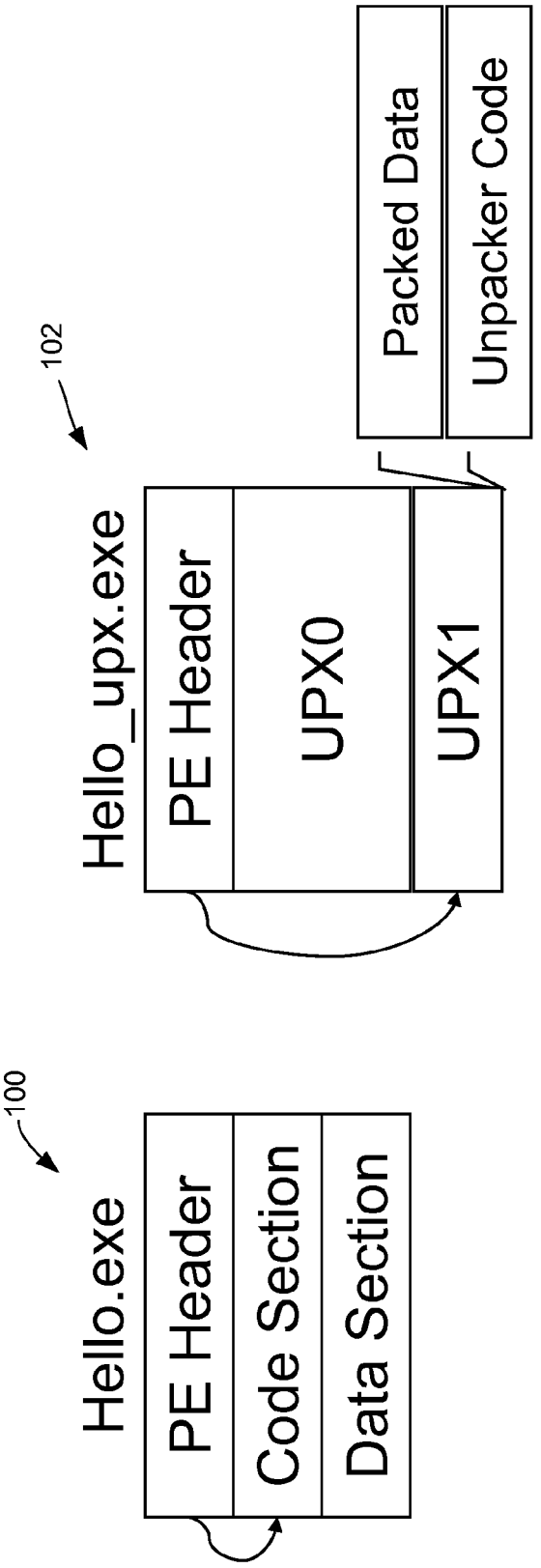
100
Hello.exe
PE Header
Code Section
Data Section
102
Hello_upx.exe
PE Header
UPX0
UPX1
Packed Data
Unpacker Code

FIGURE 1a

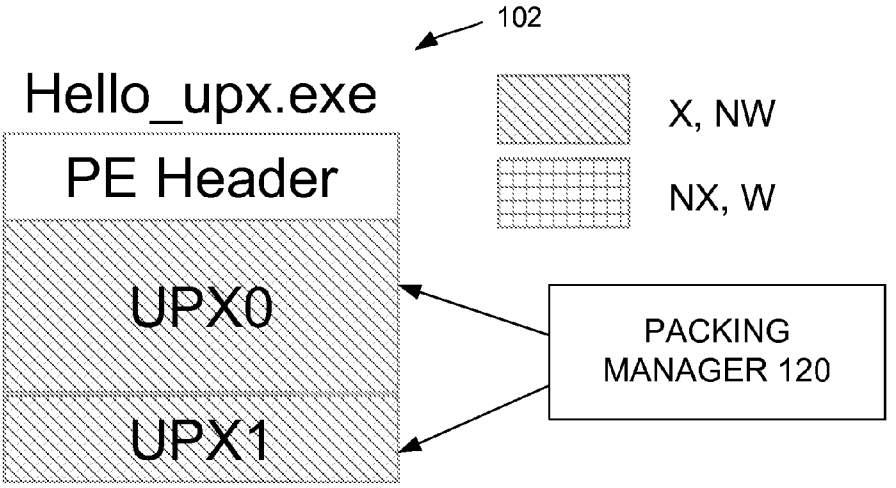

FIGURE 1b

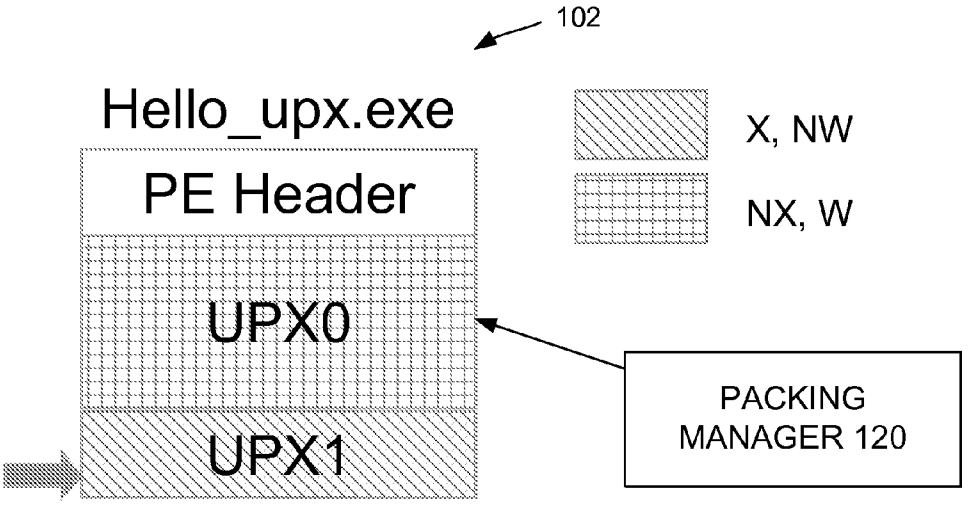

FIGURE 1c

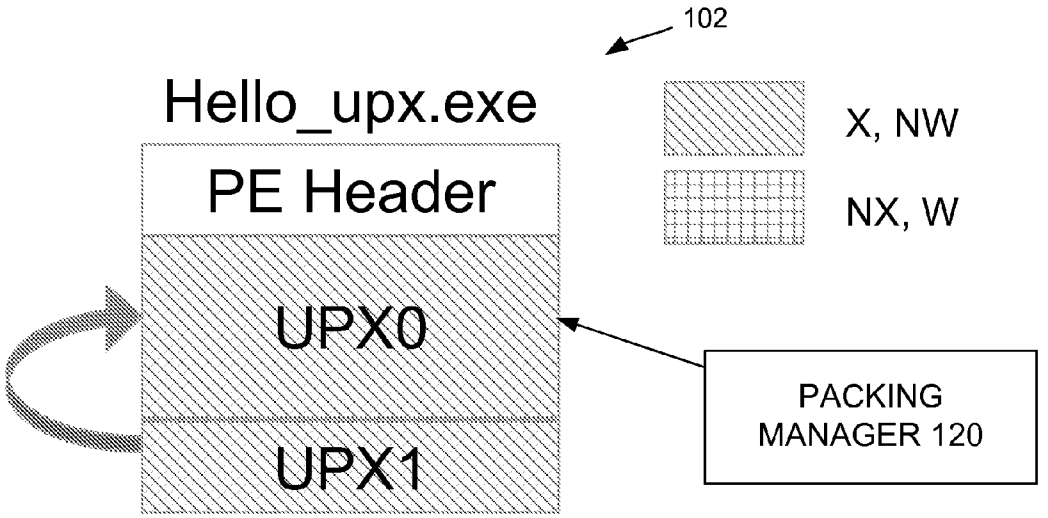
102
Hello_upx.exe
PE Header
UPX0
UPX1
X, NW
NX, W
PACKING
MANAGER 120

FIGURE 1d

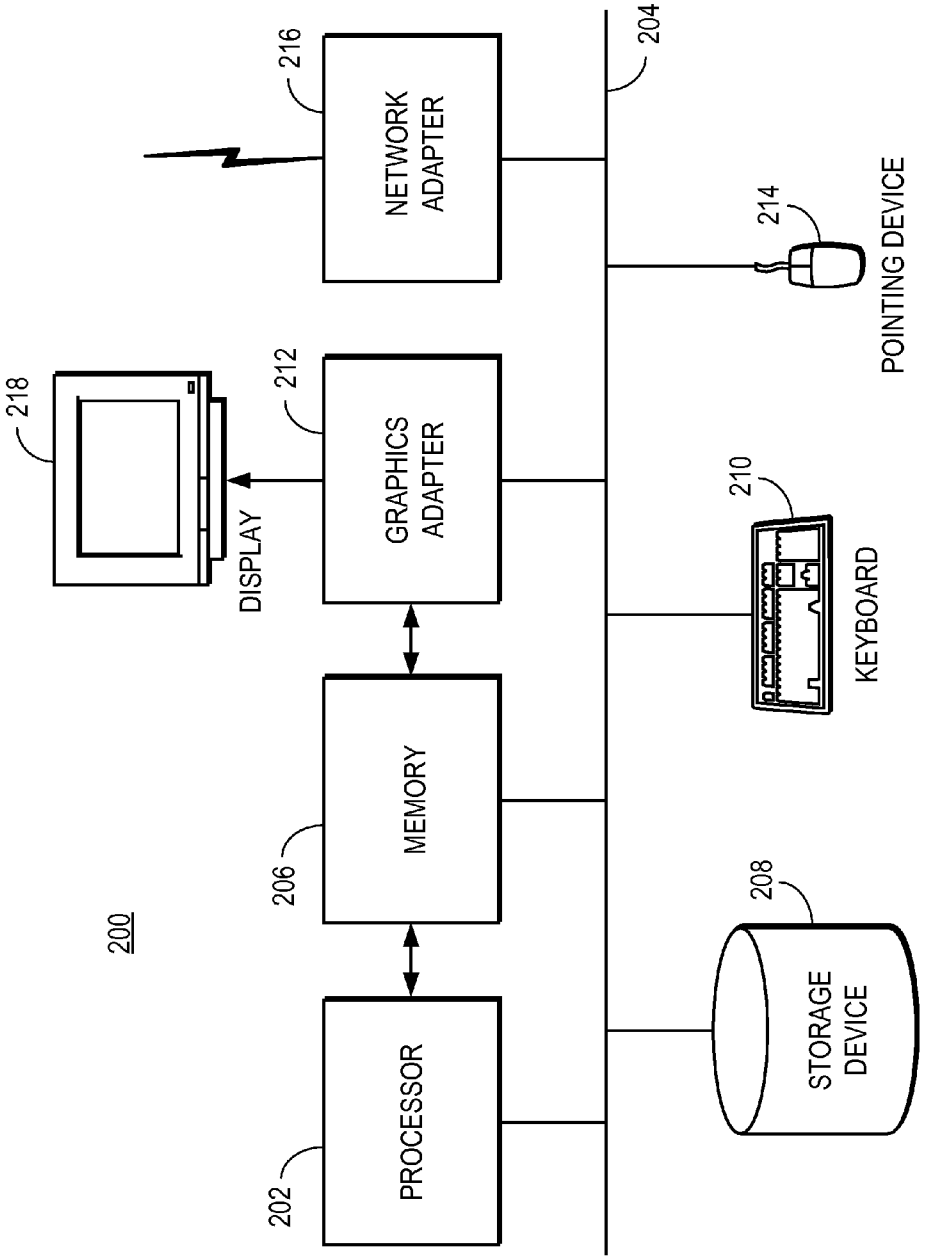
200
PROCESSOR
202
MEMORY
206
GRAPHICS ADAPTER
212
NETWORK ADAPTER
216
204
DISPLAY
218
STORAGE DEVICE
208
KEYBOARD
210
POINTING DEVICE
214

FIGURE 2

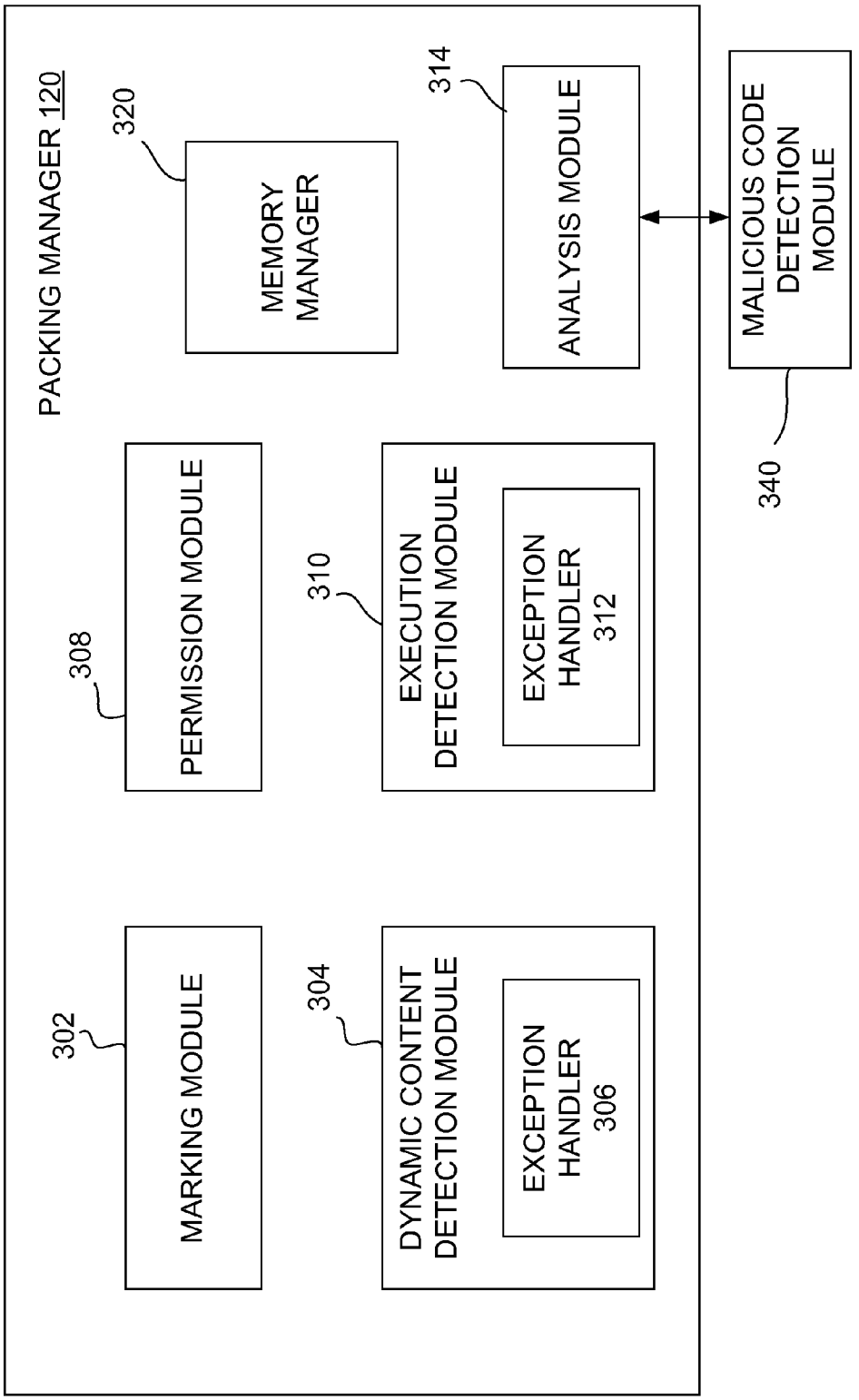
PACKING MANAGER 120
320
MEMORY MANAGER
314
ANALYSIS MODULE
MALICIOUS CODE DETECTION MODULE
340
308
PERMISSION MODULE
310
EXECUTION DETECTION MODULE
EXCEPTION HANDLER 312
302
MARKING MODULE
304
DYNAMIC CONTENT DETECTION MODULE
EXCEPTION HANDLER 306

FIGURE 3

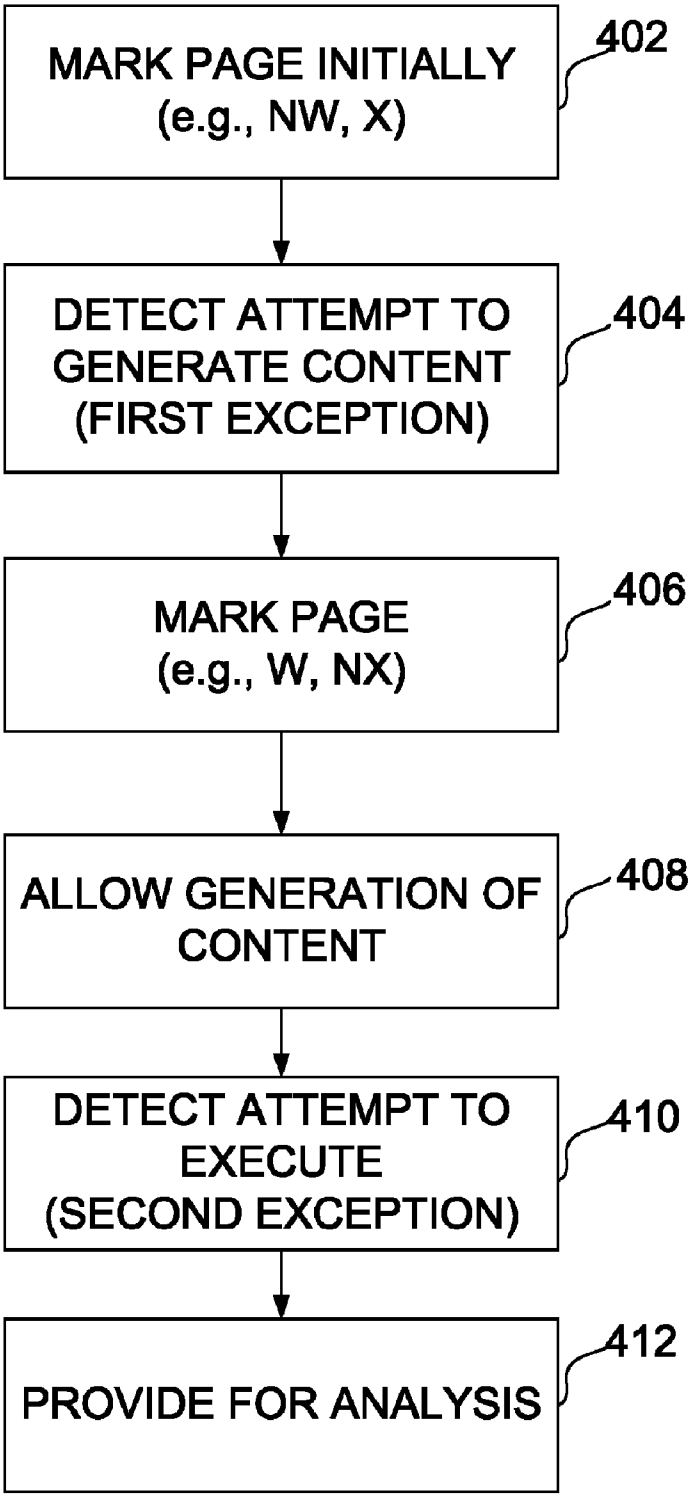
MARK PAGE INITIALLY
(e.g., NW, X)
402
DETECT ATTEMPT TO
GENERATE CONTENT
(FIRST EXCEPTION)
404
MARK PAGE
(e.g., W, NX)
406
ALLOW GENERATION OF
CONTENT
408
DETECT ATTEMPT TO
EXECUTE
(SECOND EXCEPTION)
410
PROVIDE FOR ANALYSIS
412

FIGURE 4

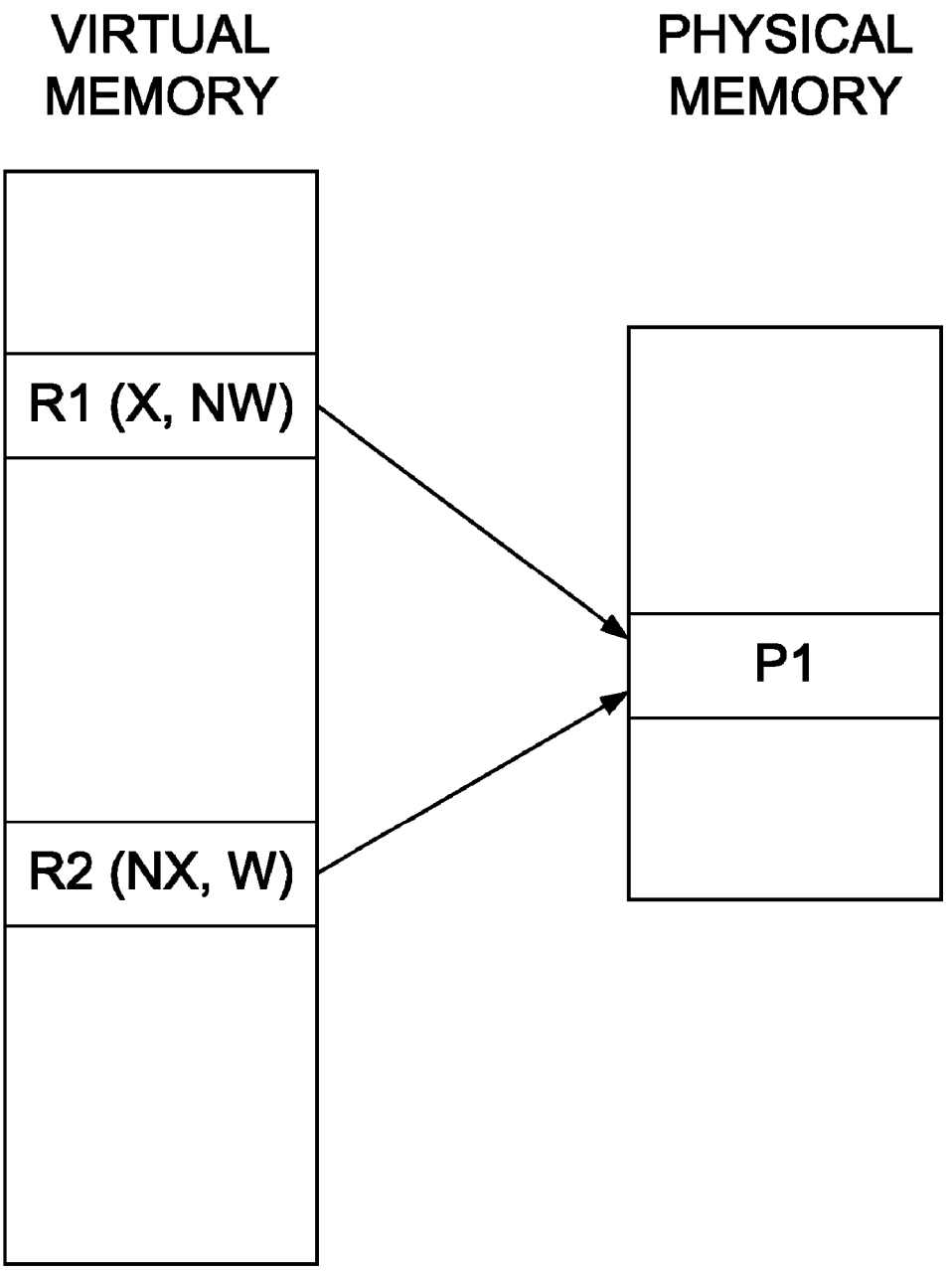

FIGURE 5

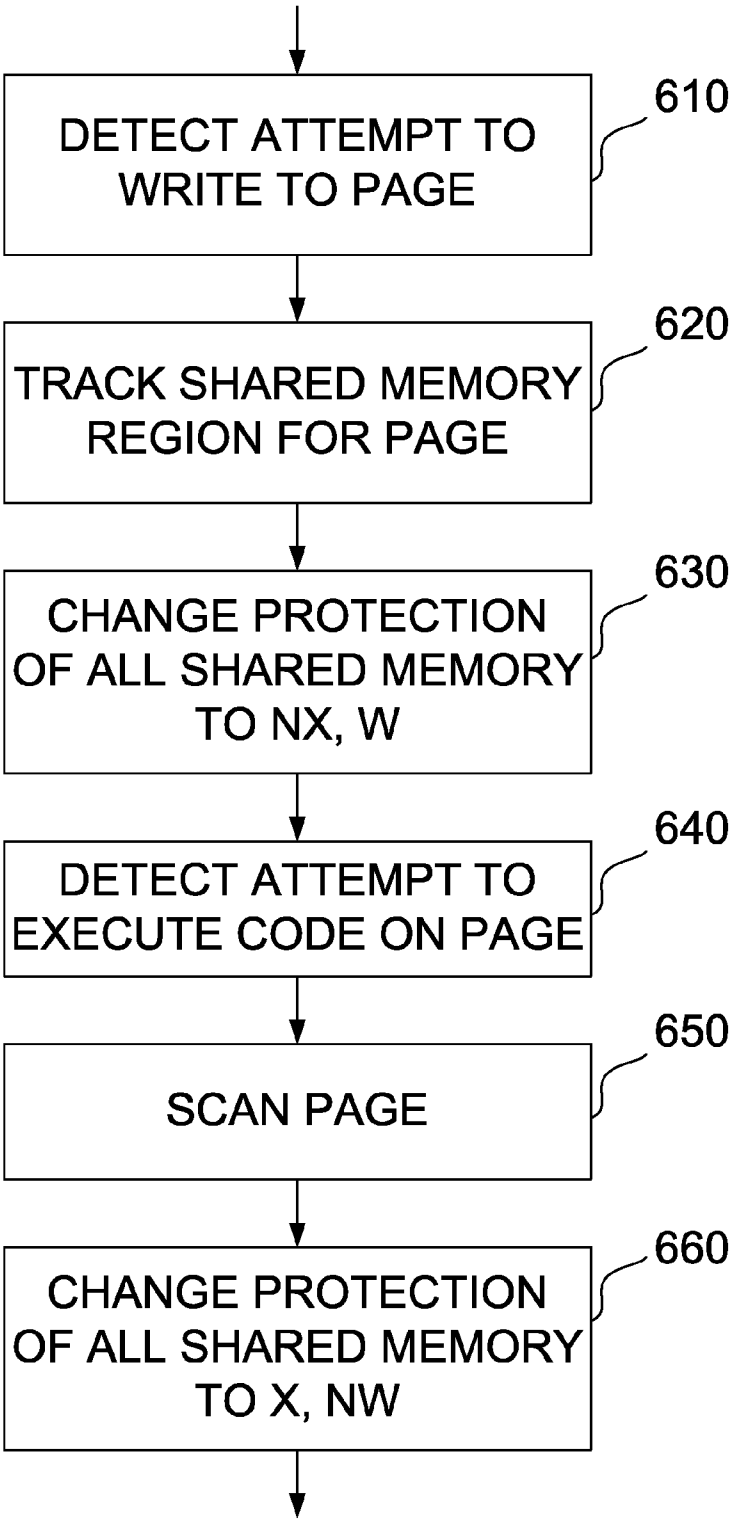
DETECT ATTEMPT TO WRITE TO PAGE
610
TRACK SHARED MEMORY REGION FOR PAGE
620
CHANGE PROTECTION OF ALL SHARED MEMORY TO NX, W
630
DETECT ATTEMPT TO EXECUTE CODE ON PAGE
640
SCAN PAGE
650
CHANGE PROTECTION OF ALL SHARED MEMORY TO X, NW
660

FIGURE 6

TRACKING MEMORY MAPPING TO PREVENT PACKERS FROM EVADING THE SCANNING OF DYNAMICALLY CREATED CODE

CROSS REFERENCE TO RELATED APPLICATIONS

This application is related to U.S. application Ser. No. 11/960,426, filed Dec. 19, 2007, which is incorporated by reference in its entirety.

BACKGROUND

This invention relates generally to antivirus software for detecting malicious code, and in particular to preventing packers from evading the scanning of their dynamically created malicious code.

Computer systems are continually threatened by a risk of attack from malicious computer code or malware, code that enters a computer without an authorized user's knowledge and/or without an authorized user's consent, such as a virus, a worm, or a Trojan horse. Antivirus prevention/detection software can be installed on computers in an attempt to prevent malicious code attacks and to detect the presence of malicious code, by e.g., using signature detection methods. However, as malware evolves, the antivirus software too has to evolve to keep up with the latest malware.

Signature-based malware detection methods currently face a serious problem with an antivirus detection evasion tool called a "packer." A packer is a tool that is used to take an existing piece of malware and hide or "pack" it to make it no longer detectable to most signature-based detection systems. A packer can change the byte-level appearance of a binary program without modifying its execution semantics. Because signatures used in anti-virus (AV) scanning engines are derived from the byte-level representations of malware samples, malware writers use packers to hide the malware program by changing its appearance. Even worse, malware writers can also apply different packers in different combinations to create a large number of variants of existing malware that can easily evade signature-based AV scanners.

Traditionally, AV companies have attempted to manage the packer problem by manually reverse-engineering popular packers and creating unpackers for them. Once an unpacker for a packer X is available, an AV scan engine can unpack binaries packed by X and can apply the standard scanning method on the unpacked malware. Unfortunately, there are a very large number of different packers; more than 1000 different packers are currently known. Thus, reverse-engineering each of these different packers is an impossible proposition because it is a slow and expensive process. AV companies can commonly deal with no more than 100 packers. Worst yet, packers are constantly evolving because the source code of some packers is available on the Internet for anyone to customize and tweak for evasion purposes. As a result, AV companies always lag behind the rate at which new packers are developed, and the detection rate of all AV engines on the market has fallen dramatically.

There are a number of shortcomings with each technique that has been used by AV companies to solve the packer problem. For example, one generic unpacking technique called "emulation" emulates each instruction of the unpacking code in a virtual system, but this emulation process can be very slow and requires large amounts of virtual memory, among other problems. Another generic unpacking technique called "dynamic translation" translates the program's code blocks to native code, which helps improve the speed of emulation, but this often fails to run correctly because it requires modification of the code and packers often check the integrity of the code. There are also tools for dealing with packers by manually marking potential address space as non-executable. Whenever the program wants to execute code in that address space, these tools can transfer control to a debugger for human being to take a look at it if the program is unpacked. However, these tools are not automated, are slow, intrusive, and require use of a debugger. Another method tracks memory write and memory execution by incrementing the code, but this requires modifying the code and thus also does not work for packers which check the integrity of the code. None of these methods provides an automated, fast, non-intrusive, and effective solution to this cross-the-industry problem of dealing with malware packed by one or more arbitrary packers.

SUMMARY

To detect malicious code that is dynamically created (i.e., created at runtime), e.g., by a packer, antivirus software may require dynamically created code to be scanned before it can be executed by a host computer system. This may be enforced, for example, by enforcing a mutual exclusion requirement so that a page of memory may be either executable or writable, but not both. When code on a particular page that is marked as not executable needs to be executed, the antivirus software first scans the page of memory of malicious code, and if no malicious code is found, the page is marked as executable but not writable. While this general technique of preventing dynamic code from being executed before it is scanned may catch simple packers, more sophisticated packers may employ evasion techniques to avoid detection. Embodiments of the invention anticipate some of these evasion techniques and apply countermeasures to render those evasion techniques ineffective.

To prevent packers from evading this scanning, in one embodiment of the invention, a countermeasure tracks the memory mapping in the host system to enforce consistency in the protection settings for all memory spaces that are mapped to the same physical memory page. In this way, an unpacker cannot use one memory space for writing unpacker code and another memory space for executing the code without triggering the scanning techniques described herein.

BRIEF DESCRIPTION OF THE DRAWINGS

FIG. **1***a* is a high-level block diagram illustrating an example of the components of a program and a packed program.

FIG. **1***b* is a high-level block diagram illustrating an example of the components a packed program illustrating changes to memory protection settings, in accordance with one embodiment of the invention.

FIG. **1***c* is a high-level block diagram illustrating an example of the components a packed program illustrating changes to memory protection settings, in accordance with one embodiment of the invention.

FIG. **1***d* is a high-level block diagram illustrating an example of the components a packed program illustrating changes to memory protection settings, in accordance with one embodiment of the invention.

FIG. **2** is a high-level block diagram illustrating a standard computer system **200** for use with an embodiment.

FIG. **3** is a high-level block diagram illustrating the functional modules within the packing manager **120**, in accordance with one embodiment of the invention.

FIG. **4** is a flowchart illustrating steps performed by the packing manager, in accordance with one embodiment of the invention.

FIG. **5** is a diagram of a memory mapping between a process address space and a physical memory in an example computing system.

FIG. **6** is a flow diagram of a process for conducting a countermeasure for tracking memory mapped files to prevent evasion of a scanning technique, in accordance with an embodiment of the invention.

The figures depict various embodiments of the present invention for purposes of illustration only. One skilled in the art will readily recognize from the following discussion that alternative embodiments of the structures and methods illustrated herein may be employed without departing from the principles of the invention described herein.

DETAILED DESCRIPTION

Scanning Dynamically Created Code

A "packer" is a program that can compress or encrypt an input executable (e.g. a binary file) into another executable that is different at the binary level. As an example of a typical packing process, a packer P reads in the byte sequence of the input binary O and compresses or encrypts this byte sequence into another byte sequence called O', and adds an unpacker routine U to O' to form the final packer output, P(O). When P(O) runs, the program's control first goes to the unpacker routine U. If AV scanning is performed on P(O) at this point, the scan will not detect the underlying malware program O as it is disguised by the packer. The unpacker routine U decompresses/decrypts O' and restores the original program O in memory. Then, control is transferred to the main entry point of O as if the unpacking process never took place. Because P(O) is substantially different from O, the byte-level signature for O is not applicable to P(O). The AV engine fails to detect P(O) as malware, even if it behaves the same as O. Once the unpacking occurs, the execution of malware O can occur without detection as any AV scan that might have occurred would have occurred upon initial execution of P(O) and so would have already missed the malware. Malware writers can pack a piece of malware O with different packers and generate different variants such as P**1**(O), P**2**(O), etc. In addition, they can apply packing multiple times to a malware O and generate such variants as P**1**(P**2**(O)), P**2**(P**1**(O)), and so on. By applying multi-layer packing, even with a small number of packers, malware writers can easily generate a large number of variants from the same malware. If an AV scanner can successfully unpack arbitrarily packed binaries, only one signature is needed per malware; otherwise it needs to create a signature per variant per malware.

FIG. **1***a* illustrates an executable program (Hello.exe **100**) and illustrates that executable packed by a common packer UPX (Hello_upx.exe **102**). The Hello.exe shows the standard PE header, code section, and data section that can be found in an executable program. The memory range of Hello.exe's **100** code and data sections is reserved as section UPX**0** in the packed version, Hello_upx.exe **102**. Data in Hello.exe's **100** code section and data section are compressed and stored in UPX**1** as packed data. Unpacker code is added in UPX**1** to restore Hello.exe's **100** code section and data section to UPX**0** from the packed data in UPX**1**. The entry point of Hello_upx.exe **102** is modified to point to the unpacker code, and so the first action will be to unpack the program and restore the original binary in memory. Control will then be transferred to the original binary. The original malware is completely unpacked before control is transferred to it. Unpacking and execution are not interleaved and code pages stay in plaintext form simultaneously. The malware's post-load address space image remains the same.

Returning again to the prior example, when a packed binary P(O) runs, its unpacker routine restores the original program being packed, O, in memory at some point in time. In brief summary, the system described here functions by accurately catching this moment and invoking the AV scanner at that point so that existing AV scanning technology can be applied to P(O) as effectively as to O. In addition, the system can catch this unpacking moment in a way that is independent of the packing algorithms used in packers so this approach can be applied to P(O) regardless of the underlying packing techniques used in P.

The packing manager system described here manages the packer problem using an automated method that allows existing AV scanning technology to be applied to detect known malware samples packed by one or more packers that are potentially proprietary. Because there is no obvious difference between an unpacker routine and a binary that is packed, detecting the end of unpacking is non-trivial, and being able to do so in a way independent of the particular packer used is even more challenging. Regardless of the packer used, the unpacker routine in a packed binary at some point creates the original program being packed at run time and transfers control to it. So, during the execution of a packed binary, the code pages associated with the original program must be dynamically generated and later on executed. By catching control transfers to dynamically written pages, the system described here can catch the moment when the original program is restored.

The detection of control transfers to dynamically written pages by the packing manager system can be performed in different ways. In one embodiment, to reduce the performance overhead associated with the detection of control transfers to dynamically written pages, the packing manager system leverages the virtual memory protection hardware in modern CPUs (such as X86) to track pages that are written and executed. A brief summary of how this embodiment can function is provided here with regard to FIGS. **1***b*, **1***c*, and **1***d*, as one example of the overall system. More specifically, before an executable binary is executed in this embodiment, the packing manager system **120** marks its memory pages as non-writable but executable. FIG. **1***b* illustrates this by showing Hello_upx.exe **102** from FIG. **1***a*, with its sections UPX**0** and UPX**1** marked by the system as non-writable (NW) but executable (X), as illustrating by the shading in FIG. **1***b*. When the unpacker starts restoring the original program, it will write to non-writable pages (marked NW by the packing manager) and will cause a write access violation exception for the first write to each such page. This is illustrated in FIG. **1***c* where the unpacker code of Hello_upx.exe **102** derives the original program from packed data and writes it to pages in UPX**0**. The virtual memory hardware automatically detects the write exception and the operating system delivers this exception to the user process. The packing manager **120** intercepts and handles each such exception by marking the associated page as writable but non-executable and resuming the execution so that the unpacker can continue restoring the original program. FIG. **1***c* illustrates this by showing UPX**0** of Hello_upx.exe **102** with different shading now that represents writable (W) but not executable (NX).

After the unpacker fully restores the original program, it transfers control to the entry-point (the first instruction) of the

original program. The virtual memory hardware detects an execution exception because that page is writable but not executable. The operating system again delivers this exception to the user process. The packing manager **120** catches this exception and calls AV scanner to scan the address space snapshot at this point. For example, the system can dump the process's address space image for an AV scanner to scan. If the AV scanner detects malware, the packing manager **120** terminates the process. If the AV scanner does not find any match based on a virus signature scan of the dumped image, the packing manager **120** changes the pages to executable and non-writable. The program can thus continue execution without problem. FIG. **1***d* illustrates this by showing that the shading of UPX**0** of Hello_upx.exe **102** has changed to now be executable (X) but not writable (NW). This embodiment of the packing manager **120** can be executed in hardware, software, or both.

In this embodiment, the packing manager **120** is generic because the way it tracks the code pages of the original programs does not require any packer-specific knowledge. Moreover, it is also fully automated because no human intervention is needed. Finally, it is efficient because page status tracking can be done transparently by virtual memory hardware, and thus does not incur any software overhead. However, in other implementations of the packing manager **120**, it does not rely on virtual memory hardware. For example, the packing manager **120** can instead run in an emulator that looks at each instruction to determine if any instruction has been modified. In each implementation, however, the packing manager **120** detects the control transfer to a dynamically generated page.

The packing manager system **120** can deal with multiple-layer packed binaries equally effectively without any modification. Since each layer of packer exhibits the same behavior, executing dynamically generated code, each layer will be unpacked in the reverse order of their packing sequence. If the latest unpacking round is not the last round, its output is an intermediate packed binary that needs to be unpacked. In this case, the program resumes and the packing manager **120** continues to track pages that are dynamically generated and executed. Finally the original program is restored and unpacking comes to the last round. The original program is scanned before execution, and will be prevented from executing if the AV scanner determines it to be malware.

As used herein, the term "AV scanner," "AV program," "AV engine," and the like can include any type of computer security or anti-malicious code prevention or detection software located on a client computer, server, or networked computer, including e.g., signature scanners, behavior blockers, intrusion detection scanners, etc. The term, "unpacking," as used here includes unpacking, unencrypting, descrambling, deobfuscating, etc. An "exception," as used herein is a signal generated when a program attempts to write to a non-writable page or to execute a non-executable page, or it can be a hardware interrupt, a software signal, etc.

FIG. **2** is a high-level block diagram illustrating a functional view of a typical computer system **200** for storing and executing the packing manager system, according to one embodiment of the present invention. This computer system **200** can act as a client computer **110**, as shown in FIG. **1**. However, one or more of the components of the computer system **200** may be missing or modified in the client computer **110**. Illustrated is a processor **202** coupled to a bus **204**. Also coupled to the bus **204** are a memory **206**, a storage device **208**, a keyboard **210**, a graphics adapter **212**, a pointing device **214**, and a network adapter **216**. A display **218** is coupled to the graphics adapter **212**.

The processor **202** may be any general-purpose processor such as an INTEL x86, SUN MICROSYSTEMS SPARC, or POWERPC compatible-CPU, or the processor **202** may also be a custom-built processor. The memory **206** may be, for example, firmware, read-only memory (ROM), non-volatile random access memory (NVRAM), and/or RAM, virtual memory, memory-mapped or disk-based memory storage, etc., and holds instructions and data used by the processor **202**. The storage device **208** is, in one embodiment, a hard disk drive but can also be any other device capable of storing data, such as a writeable compact disk (CD) or DVD, and/or a solid-state memory device. The pointing device **214** may be a mouse, track ball, or other type of pointing device, and is used in combination with the keyboard **210** to input data into the computer system **200**. The graphics adapter **212** displays images and other information on the display **218**. The network adapter **216** couples the client computer **110** with the Internet **112**.

As is known in the art, the computer system **200** is adapted to execute computer program modules for providing functionality described herein. In this description, the term "module" or "manager" refers to computer program logic for providing the specified functionality. A module/manager can be implemented in hardware, firmware, and/or software. Where the any of the modules/managers described herein are implemented as software, the module/manager can be implemented as a standalone program, but can also be implemented in other ways, for example as part of a larger program, as a plurality of separate programs, or as one or more statically or dynamically linked libraries. It will be understood that the modules/managers described herein represent one embodiment of the present invention. Certain embodiments may include other modules/managers. In addition, the embodiments may lack modules described herein and/or distribute the described functionality among the modules/managers in a different manner. Additionally, the functionalities attributed to more than one module/manager can be incorporated into a single module. In one embodiment of the present invention, the modules/managers are stored on the storage device **208**, loaded into the memory **206**, and executed by the processor **202**. Alternatively, hardware or software modules/managers may be stored elsewhere within the computer system **200**. Similarly, a computer program product comprising a computer-readable medium (e.g., a CD-ROM, a tape, a DVD, memory, flash memory, etc.) containing computer program code for performing functionalities described here is contemplated.

FIG. **3** is a high-level block diagram illustrating the functional modules within the packing manager **120**, according to one embodiment of the present invention. The packing manager **120**, in the embodiment illustrated in FIG. **3**, includes a marking module **302**, a dynamic content detection module **304** having an exception handler **306**, a permission module **308**, an execution detection module **310** having an exception handler **312**, an analysis module **314**, and a memory manager **320**. FIG. **3** also illustrates a malicious code detection module **340**, as described below. Those of skill in the art will recognize that other embodiments can have different and/or additional modules than those shown in FIG. **3** and the other figures. Likewise, the functionalities can be distributed among the modules in a manner different than described herein. When describing the embodiments of the invention below, the examples frequently focus on the virtual memory hardware embodiment as an example of how the packing manager **120** can function. However, throughout the specification, the examples used also apply to the other embodiments of the packing manager **120**, as previously described.

In some embodiments, the packing manager **120** logic is first injected into a process, and the packing manager state is initialized. This injection can occur in various ways. For example, the packing manager **120** logic can be implemented as a dynamic-link library (DLL). When the process is created, the packing manager DLL is injected into the process. There are several well-known technologies to achieve this goal. The advantage of this approach is that it is easy to make the code reliable and portable to different versions of operating systems. Another approach is to implement the packing manager **120** logic in an operating system kernel, such as WINDOWS® Kernel. Thus, any process will be automatically tracked by the kernel packing manager **120** code. The advantage of this approach is that the packing manager **120** can be stealthier. One disadvantage regarding the WINDOWS® Operating System, for example, is that it is hard to port to WINDOWS® for x64 platform because of the patchguard.

Once the packing manager **120** logic is injected, it can perform various processes. For example, the marking module **302** of the packing manager **120** can perform an initialization that includes first contacting the memory manager **320** to find the address space where the program or target process is loaded and recording the original protection setting of the memory pages in this address space. As used herein, the term "memory page" is a block of memory as defined by a memory manager, a memory management unit in a processor, a virtual memory management system, a virtual machine memory manager, or another hardware or software predefined region of memory. The memory manager can be implemented in hardware, software, or both. In some embodiments, the memory manager is virtual memory protection hardware, such as that present in modern CPUs (e.g., X86), which can be used to track pages that are written to and executed.

In some embodiments, the marking module **302** then initially marks these memory pages where the program is loaded as executable but not writable prior to any detection by the module **302** (as also illustrated in FIG. **1***b*). If the program is malware packed by a packer, it will first need to unpack the malware by writing it to one or more of the memory pages. However, because the marking module **302** initialized the memory pages to be non-writable, when the unpacker routine starts restoring the original program, it will write to the non-writable pages, as marked by the marking module **302**, and it will thus cause a write access violation exception for the first write to any such marked page. If the page(s) are already marked not writable, but executable, this marking by module **302** can be skipped.

The dynamic content detection module **304** of the packing manager **120**, for example, can detect an attempt by a program to dynamically generate content to a memory page, wherein the program is suspected to be unpacking malicious executable code to the memory page. The module **304** can perform the detection in various manners. In one embodiment, the module **304** includes an exception handler **306** that can intercept and handle a first exception generated by the memory manager **320** when the program attempts to dynamically generate content to the memory page set to be executable but not writable by the marking module **302**. When the write access violation described above occurs because the program wrote to a non-writable page, the exception handler **306** catches an exception generated by the memory manager **320** so the packing manager **120** can intercept and handle the exception.

The marking module **302** marks the memory page to which the program attempted to dynamically generate content, as detected by the module **304**. In one embodiment, the marking module **302** handles the exception generated by the exception handler **306** by doing this marking of the memory page. More specifically, in this embodiment, the marking module **302** handles the exception by marking the memory page to which the program attempted to write as writable but not executable. Thus, the program can continue its writing because the page is now marked writable again without the program even necessarily realizing that there was any sort of exception generated. If the program is packed malware, the unpacker can continue its unpacking of the original malware program. In some embodiments, the marking module **302** marks the memory page by tracking or recording the page to which the program attempted to dynamically generate content.

The permission module **308** allows the program to dynamically generate the content to the memory page until the program attempts to execute code stored on the memory page. As explained above, the marking module **302** switches each page to which the program is attempting to write from non-writable but executable to writable but not executable upon the first attempt by the program to write to that page. Once this occurs, the module **308** allows the program to continue its writing to the one or more memory pages. For the writeable, non-executable memory pages, no further action need by taken by the packing manager **120** until execution occurs because the module **308** will ensure that the program can continue to dynamically generate content for writeable, non-executable pages until the program makes an attempt at execution. Thus, the packing manager **120** does not need to interfere with or otherwise slow the dynamic generation of content by the program on the writeable, non-executable memory pages. The packing manager **120** further does not need to waste resources monitoring this dynamic generation of content since the memory pages to which the writing is occurring are marked non-executable. In this manner, the packing manager **120** has ensured that, whatever happens in the meantime, the program cannot execute dynamically generated code without the packing manager **120** first being notified. In some embodiments, if the program attempts to write to another memory page, and exception is again generated by the memory manager **320** since the page is still marked as non-writeable but executable (as marked initially).

The execution detection module **310** detects an attempt by the program to execute the code stored in the memory page, the detection occurring before the execution occurs. The module **310** can perform the detection in various manners. In one embodiment, the module **310** includes an exception handler **312** for intercepting and handling a second exception generated by the memory manager **320** upon detection of the attempt by the program to execute the code. If the program is packed malware, after the unpacker fully restores the original program, it will transfer control to the program's entry-point. However, when the program attempts to execute, this will cause an execution access violation exception inside the memory manager **320** because the pages are marked writable but not executable. The exception generated is caught by the exception handler **312**. Specifically, the page is marked non-executable because its content is dynamically generated, and the dynamic generation was detected originally by the detection module **304**, and then the page was marked as non-executable by the marking module **302**.

The exception handler **312** can work in the same manner as the exception handler **306**, and in some embodiments, they are both included in one exception handler. The exception handler can also be a standalone module. These exception handlers thus can enforce write and execution in a mutually exclusive manner so that any execution of dynamically gen-

erated code will be caught. The following is an example of pseudo code that might be implemented in the exception handlers **306**, **312**.

```
{
  if write exception
  change page to be writable but not executable
  if execution exception
  dump the memory image of the target process
  scan the dumped file
  if malware
    terminate the process
  else
    change the page to be executable
  if others
  pass the exception to the program
}
```

The analysis module **314** provides to a malicious code detection module **340** the memory page for analysis for the presence of malicious code. In providing the memory page, for example, the analysis module **314** can provide a descriptor such as the memory address location of the page or a pointer to the page, a dump or copy of the contents of the page, execute a callback function on the memory page from the malicious code detection module, an in-memory portable executable (PE) file, etc. For example, the analysis module **314** can present a file that is already in memory to module **340**, and since it is already in memory, there is no need to dump it out to disk for module **340** to read from disk to memory again. Thus, the file is presented in an efficient and convenient manner to module **340**.

The malicious code detection module **340** can be an AV scanner for scanning the program for the presence of malicious code. In FIG. **3**, the malicious code detection module **340** is shown as separate from the packing manager **120**, but it could also be included partially or entirely within the packing manager **120**. In some embodiments, at each execution access violation exception, the analysis module **314** dumps the process's address space image for an AV scanner to scan for malware. In some embodiments, the AV scanner uses standard virus signature detection methods known in the art to scan the program to determine if a known virus signature is contained in the program. If the AV scanner does not find any match in the dumped image, the program is permitted to continue its execution without further interruption. However, if the AV scanner/detection module **340** detects malware, then appropriate action can be taken to prevent this malware from executing and infecting or otherwise harming the computer. For example, the malware can be quarantined for further examination, the user can be notified that malware was detected, etc. In some embodiments, the module **314** provides only the one or more memory pages to which the program dynamically generated content and then attempted to execute.

In some embodiments, the program is packed by multiple layers of packers, and these can be different, arbitrary packers, some of which may be proprietary packers or packers that were not previously known or seen before by computer security companies (e.g., for which antivirus signatures are not currently available). For each layer of packing, the modules described above can repeat the steps. For example, a first layer of unpacking may only unpack a program that is still packed by one or more further layers of packers. Thus, when there is an attempt to execute this program that is still packed (e.g., control is first transferred to the pages whose content are dynamically generated), the analysis module **314** can provide these pages for scanning. Since the original program is still packed by one or more packers, the scanner may or may not detect that there is malware contained, depending on whether or not there is a signature available for that packer that was unpacked. If there is determined not to be malicious code in that layer that was unpacked, the unpacking process can continue, resulting in another layer being unpacked. Again, there is detection of the end of the unpacking, and before execution of the unpacked code occurs a scan can be performed. These steps performed by the modules above can be repeated until eventually the last layer of unpacking occurs, and the original program is unpacked. The packing manager **120** again detects the point in the unpacking process when the program attempts to execute the memory page with dynamically generated content. If this original program contains malicious code, the analysis of the memory page performed by the malicious code detection module will likely detect it because the memory page now contains unpacked malicious code, and thus the malicious code will be caught before execution and can be prevented from harming the computer.

Referring now to FIG. **4**, there is shown a flowchart illustrating the operation of the packing manager **120**, according to some embodiments of the present invention. Different embodiments of the packing manager **120** may perform the illustrated steps in different orders, omit certain steps, and/or perform additional steps not shown in FIG. **4**.

As shown in FIG. **4**, in some embodiments, the packing manager **120** initially marks **402** the memory page as executable but not writable. As explained above, the packing manager **120** can find the address space where the program or target process is loaded and can record the original protection setting of the memory pages in this address space. If the memory pages are initially set to executable and writable, the packing manager can change these protection settings by marking each of the memory pages as executable but not writable.

The packing manager **120** detects **404** an attempt by the program to dynamically generate content to a memory page. The packing manager **120** can perform its overall method on any program on a computer, but especially if program is suspected to be unpacking malicious executable code to the memory page. The packing manager **120** performs this detection **404**, in some embodiments, when a first exception generated. Specifically, an exception or interrupt can be generated when the program attempts to dynamically generate the content to the memory page since the page was previously set to be executable but not writable by the packing manager **120** (or was already initially set to be non-writable, in which case the packing manager **120** did not need to reset the page).

The packing manager **120** marks **406** the memory page to which the program attempted to dynamically generate content. In some embodiments, this marking occurs in response to the write access violation that occurs when the program attempts to write to the non-writable pages. As explained above, an exception can be generated by a memory manager, and the packing manager **120** intercepts and handles the exception. One way in which the packing manager **120** handles this exception is by marking **406** the memory page as writeable but not executable. Specifically, the packing manager **120** can switch the page that is currently marked as executable but not writeable to writeable but not executable. The packing manager **120** can thus allow **408** the program to dynamically generate the content to the memory page until the program attempts to execute code stored on the memory page. The program can now continue to write to the page without causing further write access violations since the page is now writeable. However, since the page was switched to non-executable, the program will not generate any further

access violations until it attempts to execute. If the program attempts to write to another page, steps **404**, **406**, and **408** can be repeated.

The packing manager **120** then detects **410** an attempt by the program to execute the code stored in the memory page. This detection occurs before the execution occurs, thus allowing the packing manager **120** to be notified when the program first tries to execute the dynamically generated content. The packing manager **120** performs this detection **410**, in some embodiments, when a second exception is generated by a memory manager upon detection of the attempt by the program to execute the code. The packing manager **120** can again intercept the exception and take action. The packing manager **120** provides **412** to a malicious code detection module the memory page for analysis for the presence of malicious code. For example, the packing manager **120** can dump the process's address space image for the malicious code detection module to scan or otherwise perform an analysis for malware (e.g., using standard virus signature detection methods known in the art). If the malicious code detection module does not find any match in the dumped image, the program is permitted to continue its execution without further interruption. However, if the malicious code detection module detects malicious code in the program, then appropriate action can be taken to prevent this malicious code from harming the computer.

As explained above, some programs may be packed by more than one layer of packers. In some cases, there may be multiple layers of arbitrary packers of different types, some or all of which may not have been previously known (e.g., no signatures available). In some cases, the same packer may be applied more than once. Steps **402**-**412** can be repeated for each layer of packer, as explained above. When the original program is finally unpacked, the packing manager **120** will detect the point in time between the end of unpacking and the execution of the original program. Thus, if this program contains malicious code, this malicious code can be detected when the program is provided **412** for analysis. In other words, the packing manager **120** can refuse to execute any dynamically generated code without scanning first. Thus, at the finish of each layer of unpacking, but before execution, a scan will occur. In some embodiments, the scan occurs immediately after unpacking is concluded. However, it is also contemplated that additional steps could occur after unpacking ends but before execution, so the scanning can occur after these steps but still before execution.

Countermeasures for Possible Evasion Techniques

Embodiments of the invention described above prevent a host system from executing code that has been created dynamically before that code has been scanned to protect the host system against potential malicious code. However, these embodiments may rely on processes in a host computer system such as changing memory protections and handling memory access and execution exceptions. A malicious code programmer may attempt to exploit these to evade the basic detection and scanning techniques described. For example, one feature used by an embodiment of the system is the enforcement of a mutual exclusion requirement, in which a memory page cannot be both writable and executable at the same time. This way, an unpacker cannot unpack malicious code and then pass control to that malicious code before the antivirus software has a chance to scan that dynamically created code.

To evade the detection of dynamically created code, however, an unpacker may attempt to use memory mapped files to map multiple areas in a process address space (i.e., virtual memory) to an area of the physical memory. FIG. **5** illustrates an example of this evasion technique, where virtual pages R**1** and R**2** are created in a process address space, and each of the virtual pages maps to a page P**1** of the physical memory. Using memory mapping, an unpacker can set one virtual (e.g., R**1**) to be executable but not writable, and another virtual page (e.g., R**2**) to be writable but not executable. The unpacker can then evade the techniques described herein by using virtual page R**2** to write dynamically created code to the memory page P**1** in the physical memory, and then use virtual page R**1** to execute the dynamically created (i.e., unpacked) code from memory page P**1**.

By using memory mapped files that have different protection settings (e.g., executable and/or writable) and that are mapped to the same memory page in the physical memory, the unpacker can avoid causing an execution exception to be generated when dynamically created code is executed. This evasion technique thus avoids the scanning that would normally be triggered when the execution exception is generated and intercepted by the packing manager **120**, as described above. In accordance with one embodiment of the invention, illustrated in FIG. **6**, a countermeasure is provided to prevent such an evasion tactic. The countermeasure involves tracking the shared memory region so that pages in the physical memory are treated consistently, regardless of how they are addressed (e.g., via memory mapped files). This countermeasure may be implemented as a modification to the basic detection and scanning technique described above in connection with FIG. **4**.

The countermeasure is triggered when multiple virtual memory address views are mapped to the same physical address space. Regardless of each individual virtual address view's protection setting, all of the virtual address views' protections are changed to be executable but not writable. For example, the memory protection of R**1** and R**2** in FIG. **5** would be changed to be executable but not writable once the countermeasure detects that they are mapped to the same physical range P**1**.

In one embodiment, the countermeasure is triggered when the packing manager **120** detects **610** an attempt to write to a memory page. This detection may be performed as described above in connection with step **404**, where a write exception is intercepted because the memory page (or virtual page) was initially set to be not writable. The attempt to write to the memory page may be made by addressing the memory page using a virtual page in process address space (e.g., either R**1** or R**2** in the example of FIG. **5**). Regardless of the addressing, the attempt indicates that the program may be adding dynamically created code to the particular memory page. Accordingly, the memory page of all the memory mapped files (e.g., both R**1** and R**2** in the example of FIG. **5**) must be made non-executable to enforce the execution and write mutual exclusion requirement.

To enforce this mutual exclusion consistently, regardless of how the memory page is addressed by the write instruction in the program, the packing manager **120** tracks **620** the shared memory region for the memory page. This allows the packing manager **120** to determine all of the virtual pages that map to the memory page. Tracking **620** may be performed in various ways depending on the type of host computer system. In a MICROSOFT® WINDOWS® system, for example, the MapViewOfFile(Ex) API function can be used to track the mapping of the virtual pages in the process address space to the memory pages in the physical memory. Once all of the virtual pages are determined for the particular memory page, the packing manager **120** changes **630** the page protection for each of these pages to be non-executable and writable. The

packing manager **120** then returns control to the program, which can then write to the memory page.

At a subsequent time, the packing manager **120** may detect **640** an attempt to execute code on the memory page. Again, this detection may be performed as described above in connection with step **410**, where an execute exception is intercepted because the memory page (or virtual page) was set to be non-executable in step **630**. The attempt to execute code on the memory page may be made by addressing the memory page (e.g., R**1** or R**2** in FIG. **5**). It does not matter how the memory page was addressed for the purposes of detecting and scanning dynamically created code, since all of the pages in the shared address space have been tracked **620** and changed **630** consistently to be non-executable. In this way, an unpacker cannot evade detection using memory mapped files.

In response to detecting **640** the attempt to execute code on the memory page, the packing manager **120** causes the memory page to be scanned **650** for malicious code that may have been unpacked and written to that memory page when it was set to be writable. The scanning may be performed as described above in connection with step **412**. If malicious code is found, the packing manager **120** may prevent execution of that code by keeping the page protection of the memory page to be non-executable. If no malicious code is found, the packing manager **120** can change **660** the page protection of the memory page and all of its associated virtual pages to be executable but not writable. The packing manager **120** then passes control back to the program and allows the code to continue execution.

SUMMARY

The foregoing description of the embodiments of the invention has been presented for the purpose of illustration; it is not intended to be exhaustive or to limit the invention to the precise forms disclosed. Persons skilled in the relevant art can appreciate that many modifications and variations are possible in light of the above disclosure.

Some portions of this description describe the embodiments of the invention in terms of algorithms and symbolic representations of operations on information. These algorithmic descriptions and representations are commonly used by those skilled in the data processing arts to convey the substance of their work effectively to others skilled in the art. These operations, while described functionally, computationally, or logically, are understood to be implemented by computer programs or equivalent electrical circuits, microcode, or the like. Furthermore, it has also proven convenient at times, to refer to these arrangements of operations as modules, without loss of generality. The described operations and their associated modules may be embodied in software, firmware, hardware, or any combinations thereof.

Any of the steps, operations, or processes described herein may be performed or implemented with one or more hardware or software modules, alone or in combination with other devices. In one embodiment, a software module is implemented with a computer program product comprising a computer-readable medium containing computer program code, which can be executed by a computer processor for performing any or all of the steps, operations, or processes described.

Embodiments of the invention may also relate to an apparatus for performing the operations herein. This apparatus may be specially constructed for the required purposes, and/or it may comprise a general-purpose computing device selectively activated or reconfigured by a computer program stored in the computer. Such a computer program may be stored in a tangible computer readable storage medium or any type of media suitable for storing electronic instructions, and coupled to a computer system bus. Furthermore, any computing systems referred to in the specification may include a single processor or may be architectures employing multiple processor designs for increased computing capability.

Embodiments of the invention may also relate to a computer data signal embodied in a carrier wave, where the computer data signal includes any embodiment of a computer program product or other data combination described herein. The computer data signal is a product that is presented in a tangible medium or carrier wave and modulated or otherwise encoded in the carrier wave, which is tangible, and transmitted according to any suitable transmission method.

Finally, the language used in the specification has been principally selected for readability and instructional purposes, and it may not have been selected to delineate or circumscribe the inventive subject matter. It is therefore intended that the scope of the invention be limited not by this detailed description, but rather by any claims that issue on an application based hereon. Accordingly, the disclosure of the embodiments of the invention is intended to be illustrative, but not limiting, of the scope of the invention, which is set forth in the following claims.

What is claimed is:

1. A computer program product for protecting a host computer system against dynamically unpacked malicious code, the computer program product comprising a non-transitory computer-readable storage medium containing executable computer program code for:

detecting an attempt by a program to unpack code by writing to a memory page on the host computer system that is set to be executable but not writable, wherein the attempt by the program to unpack the code is made by addressing the memory page using a first address;

intercepting an exception to allow the program to unpack the code by writing to the memory page;

tracking a shared memory region in the host computer system to determine a plurality of addresses mapped to the memory page responsive to the exception, the plurality of addresses including the first address and a second address distinct from the first address that both map to the memory page;

marking each of the plurality of addresses that maps to the memory page to be writable but non-executable thereby allowing the program to unpack the code to the memory page;

detecting an attempt by the program to execute the unpacked code on the memory page by addressing the memory page using the second address;

before executing the unpacked code on the memory page, scanning the memory page for malicious code; and

executing the unpacked code on the memory page if the scanning does not identify malicious code.

2. The computer program product of claim **1**, wherein detecting the attempt to execute the unpacked code on the memory page comprises intercepting a second exception generated by a memory manager when the program attempts to execute the unpacked code on the memory page, the memory page set to be writable but not executable.

3. The computer program product of claim **1**, the computer-readable medium further containing computer program code for:

keeping the memory page as being non-executable if the scanning identifies malicious code on the memory page.

4. The computer program product of claim **1**, the computer-readable medium further containing computer program code for:

declaring an existence of malicious code if the scanning identifies malicious code on the memory page.

5. The computer program product of claim **1**, wherein scanning the memory page for malicious code comprises analyzing the memory page using a set of known signatures for malicious code.

6. A computer-implemented method for protecting a host computer system against dynamically unpacked malicious code, the method comprising:

detecting an attempt by a program to unpack code by writing to a memory page on the host computer system that is set to be executable but not writable, wherein the attempt by the program to unpack the code is made by addressing the memory page using a first address;

intercepting an exception to allow the program to unpack the code by writing to the memory page;

tracking a shared memory region in the host computer system to determine a plurality of addresses mapped to the memory page responsive to the exception, the plurality of addresses including the first address and a second address distinct from the first address that both map to the memory page;

marking each of the plurality of addresses that maps to the memory page to be writable but non-executable thereby allowing the program unpack the code to the memory page;

detecting an attempt by the program to execute the unpacked code on the memory page, wherein the attempt by the program to execute the unpacked code is made by addressing the memory page using the second address;

before executing the unpacked code on the memory page, scanning the memory page for malicious code; and

executing the unpacked code on the memory page if the scanning does not identify malicious code.

7. The method of claim **6**, wherein detecting the attempt to execute the unpacked code on the memory page comprises intercepting a second exception generated by a memory manager when the program attempts to execute the unpacked code on the memory page, the memory page set to be writable but not executable.

8. The method of claim **6**, further comprising:

keeping the memory page as being non-executable if the scanning does identify malicious code on the memory page.

9. The method of claim **6**, further comprising:

declaring an existence of malicious code if the scanning does identify malicious code on the memory page.

10. The method of claim **6**, wherein scanning the memory page for malicious code comprises analyzing the memory page using a set of known signatures for malicious code.

11. A computer system for protecting against dynamically unpacked malicious code, the computer system comprising:

a computer processor; and

a non-transitory computer-readable storage medium storing executable instructions configured to execute on the computer processor, the instructions when executed by the computer processor configured to perform steps comprising:

detecting an attempt by a program to unpack code by writing to a memory page on the host computer system that is set to be executable but not writable, wherein the attempt by the program to unpack the code is made by addressing the memory page using a first address;

intercepting an exception to allow the program to unpack the code by writing to the memory page;

tracking a shared memory region in the host computer system to determine a plurality of addresses mapped to the memory page responsive to the exception, the plurality of addresses including the first address and a second address distinct from the first address that both map to the memory page;

marking each of the plurality of addresses that maps to the memory page to be writable but non-executable thereby allowing the program to unpack the code to the memory page;

detecting an attempt by the program to execute the unpacked code on the memory page, wherein the attempt by the program to execute the unpacked code is made by addressing the memory page using the second address;

before executing the unpacked code on the memory page, scanning the memory page for malicious code; and

executing the unpacked code on the memory page if the scanning does not identify malicious code.

12. The computer system of claim **11**, wherein detecting the attempt to execute the unpacked code on the memory page comprises intercepting a second exception generated by a memory manager when the program attempts to execute the unpacked code on the memory page, the memory page set to be writable but not executable.

13. The computer system of claim **11**, the instructions when executed by the computer processor configured to further perform steps comprising:

keeping the memory page as being non-executable if the scanning identifies malicious code on the memory page.

14. The computer system of claim **11**, the instructions when executed by the computer processor configured to further perform steps comprising:

declaring an existence of malicious code if the scanning identifies malicious code on the memory page.

15. The computer system of claim **11**, wherein scanning the memory page for malicious code comprises analyzing the memory page using a set of known signatures for malicious code.

16. The computer system of claim **11**, wherein the memory page comprises physical memory and the shared memory region comprises virtual memory.

17. The computer program product of claim **1**, wherein the memory page comprises physical memory and the shared memory region comprises virtual memory.

18. The method of **6**, wherein the memory page comprises physical memory and the shared memory region comprises virtual memory.

* * * * *