US010473310B2

(12) **United States Patent**
Carroll

(10) **Patent No.: US 10,473,310 B2**
(45) **Date of Patent: Nov. 12, 2019**

(54) **METHOD AND APPARATUS FOR ILLUMINATION OF DRILLING RIGS AND SURROUNDING LOCATIONS**

(71) Applicant: **Location Illuminator Technologies, LLC**, Maurice, LA (US)

(72) Inventor: **Charles Allen Carroll**, Maurice, LA (US)

(73) Assignee: **Location Illuminator Technologies, LLC**, Maurice, LA (US)

(*) Notice: Subject to any disclaimer, the term of this patent is extended or adjusted under 35 U.S.C. 154(b) by 0 days.

(21) Appl. No.: **15/861,313**

(22) Filed: **Jan. 3, 2018**

(65) **Prior Publication Data**

US 2018/0187873 A1 Jul. 5, 2018

Related U.S. Application Data

(60) Provisional application No. 62/442,023, filed on Jan. 4, 2017.

(51) **Int. Cl.**

F21V 21/28	(2006.01)
F21S 8/04	(2006.01)
E21B 41/00	(2006.01)
E21B 15/00	(2006.01)
F21V 19/00	(2006.01)
F21V 21/22	(2006.01)

(52) **U.S. Cl.**

CPC ***F21V 21/28*** (2013.01); ***E21B 15/00*** (2013.01); ***E21B 41/00*** (2013.01); ***F21S 8/046*** (2013.01); ***F21V 19/001*** (2013.01); *F21V 21/22* (2013.01)

(58) **Field of Classification Search**

None

See application file for complete search history.

(56) **References Cited**

U.S. PATENT DOCUMENTS

7,988,343	B2 *	8/2011	Palmisano, Jr.	F21V 17/007 362/424
8,172,438	B2 *	5/2012	Konop	B60P 3/18 362/192
8,734,163	B1 *	5/2014	Gordin	G09B 25/04 434/367
8,931,932	B2 *	1/2015	Lipscomb	F21V 31/03 362/362
2003/0137840	A1 *	7/2003	Citron	F21V 21/30 362/249.07
2005/0129464	A1 *	6/2005	Moncus	E21B 19/006 405/203
2008/0129543	A1 *	6/2008	Lee	G08G 1/0955 340/908
2008/0212329	A1 *	9/2008	Duguay	F21S 8/086 362/310

(Continued)

Primary Examiner — Elmito Breval

(74) *Attorney, Agent, or Firm* — Ted M. Anthony

(57) **ABSTRACT**

A lighting assembly can be quickly and efficiently mounted to a crown of a drilling rig derrick in order to provide wide-area illumination of the derrick and surrounding work location. An adjustable support frame member can be operationally attached to a hand rail of a derrick crown using fixed-length bracket members, adjustable-length bracket members and/or a combination(s) thereof. Lighting-emitting light source elements are adjustably attached to the support frame, and can be selectively aimed to direct light as desired.

8 Claims, 11 Drawing Sheets

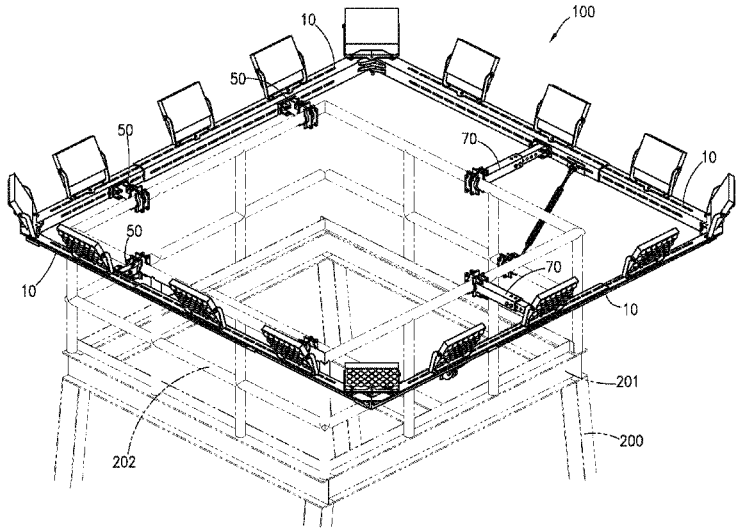

(56) **References Cited**

U.S. PATENT DOCUMENTS

2010/0264390	A1*	10/2010	Cerda	E02D 17/08 256/24
2010/0276558	A1*	11/2010	Faust	F24J 2/5205 248/222.14
2014/0117190	A1*	5/2014	Werner	E04C 3/09 248/346.03
2015/0153036	A1*	6/2015	Gowanlock	F21V 33/00 362/249.01
2015/0184840	A1*	7/2015	Gowanlock	F21V 33/00 362/249.1
2016/0059774	A1*	3/2016	Crandall	B60Q 1/323 280/164.1
2016/0109079	A1*	4/2016	McKinley	F02B 63/047 362/89

* cited by examiner

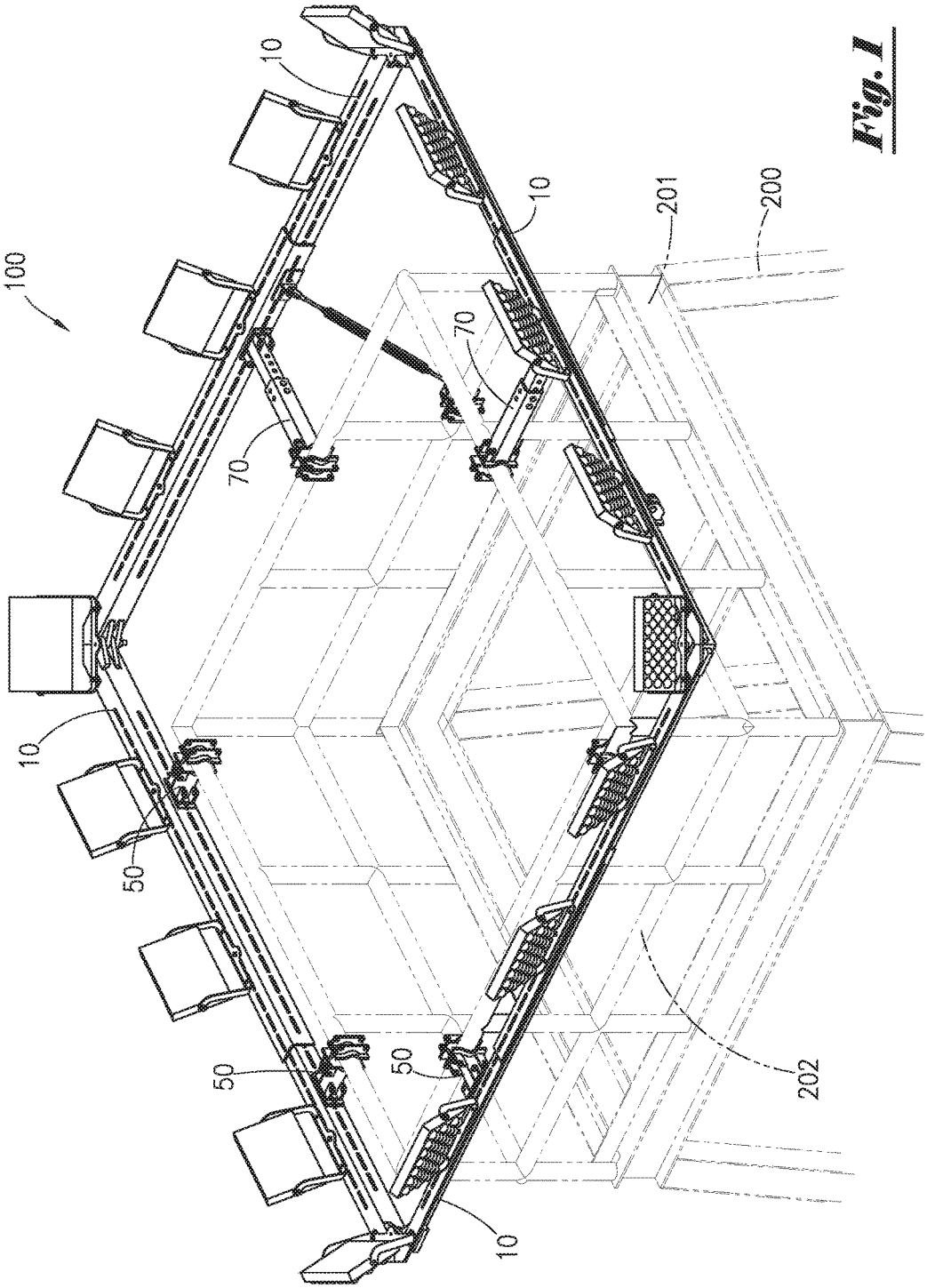

Fig. 1

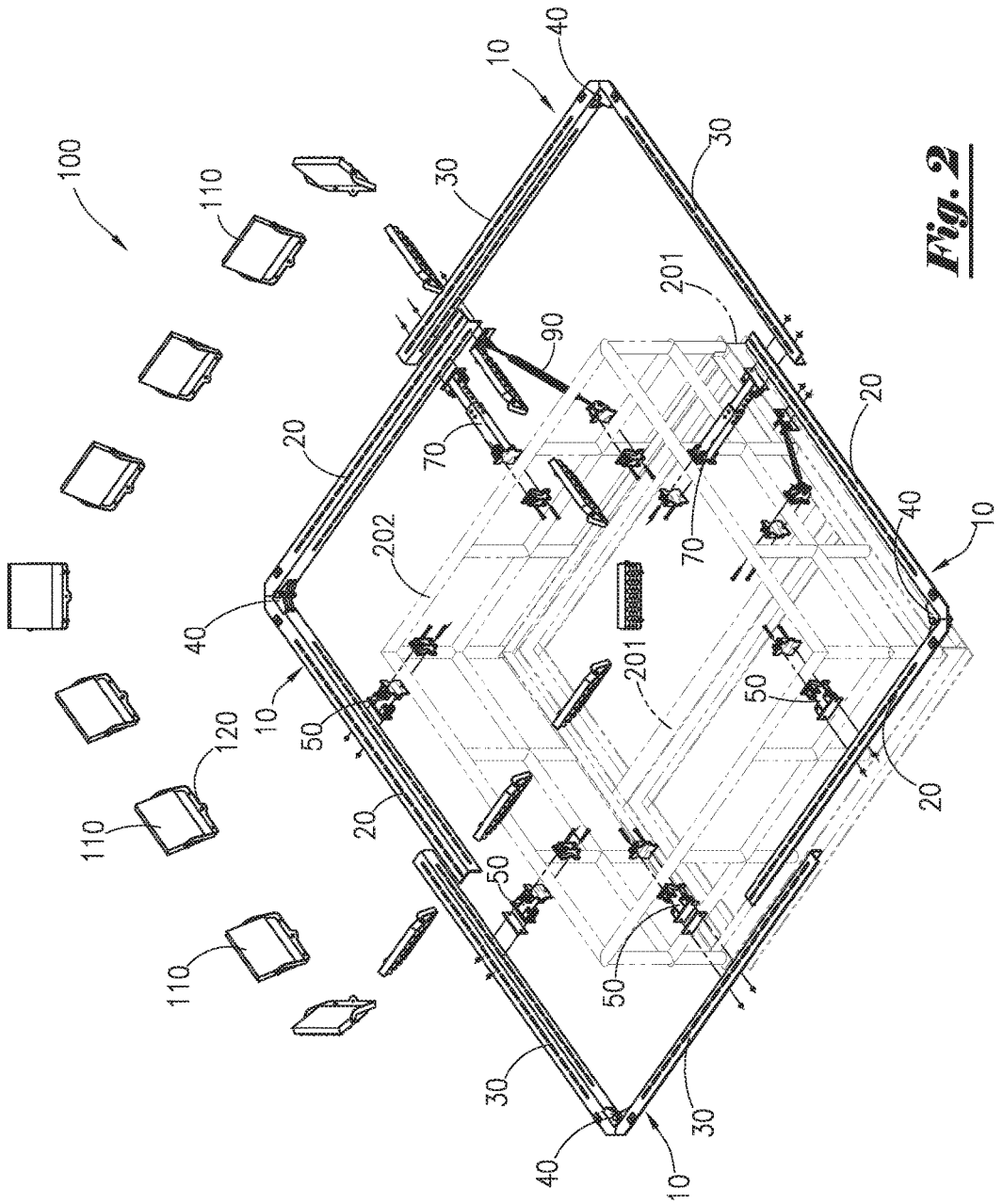

Fig. 2

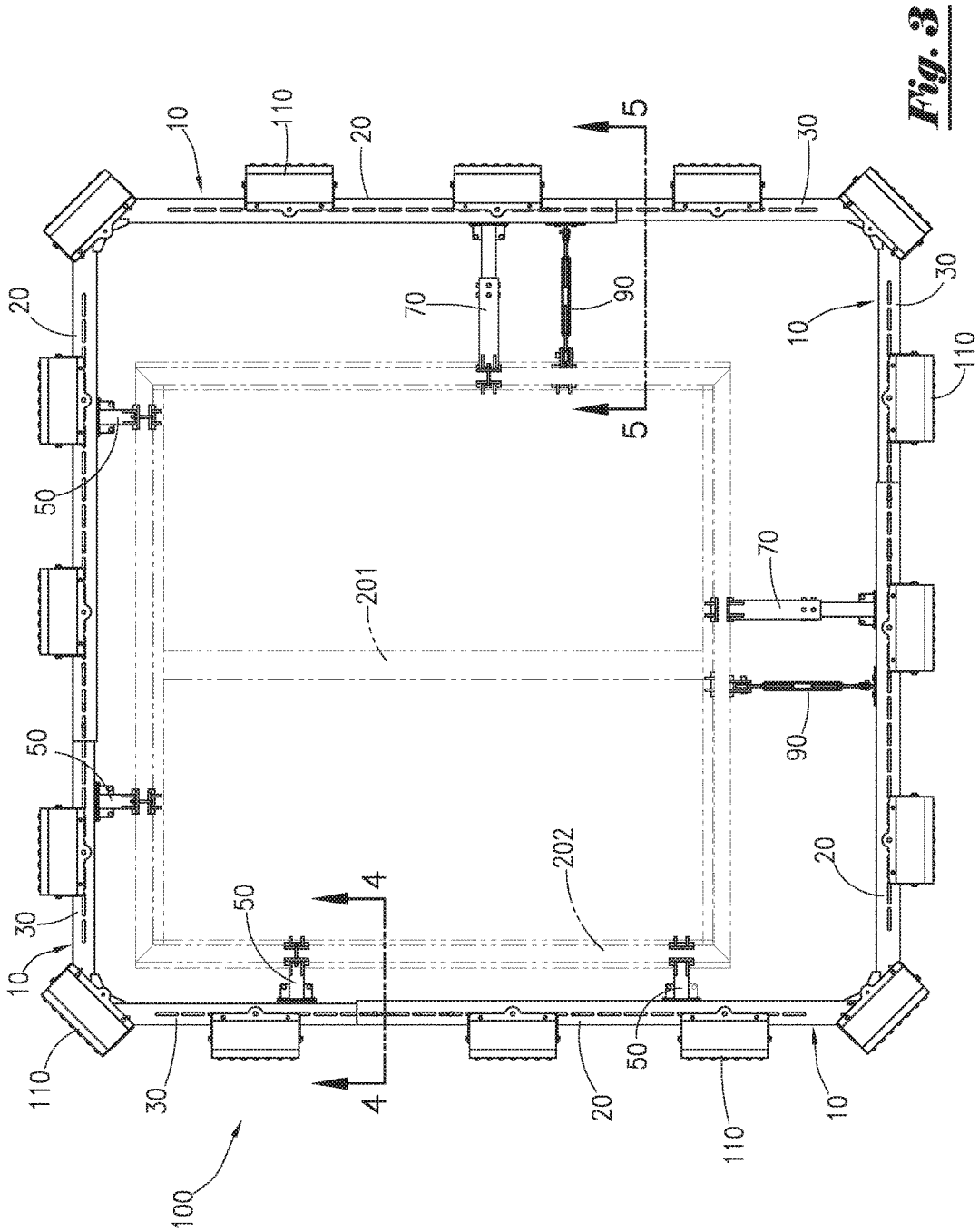

Fig. 3

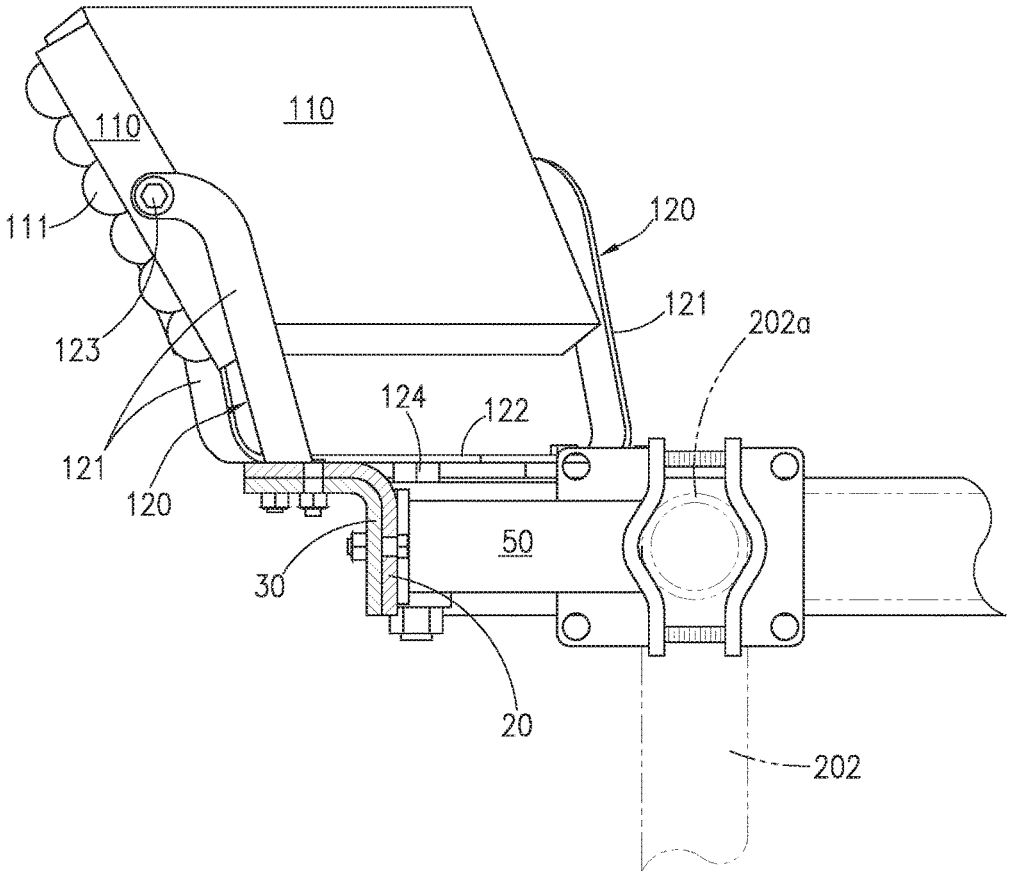

Fig. 4

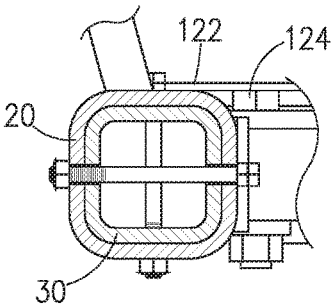

Fig. 4a

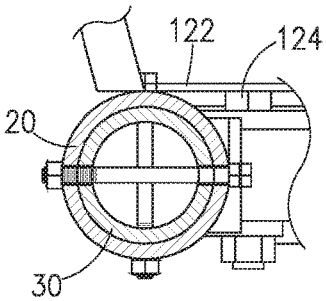

Fig. 4b

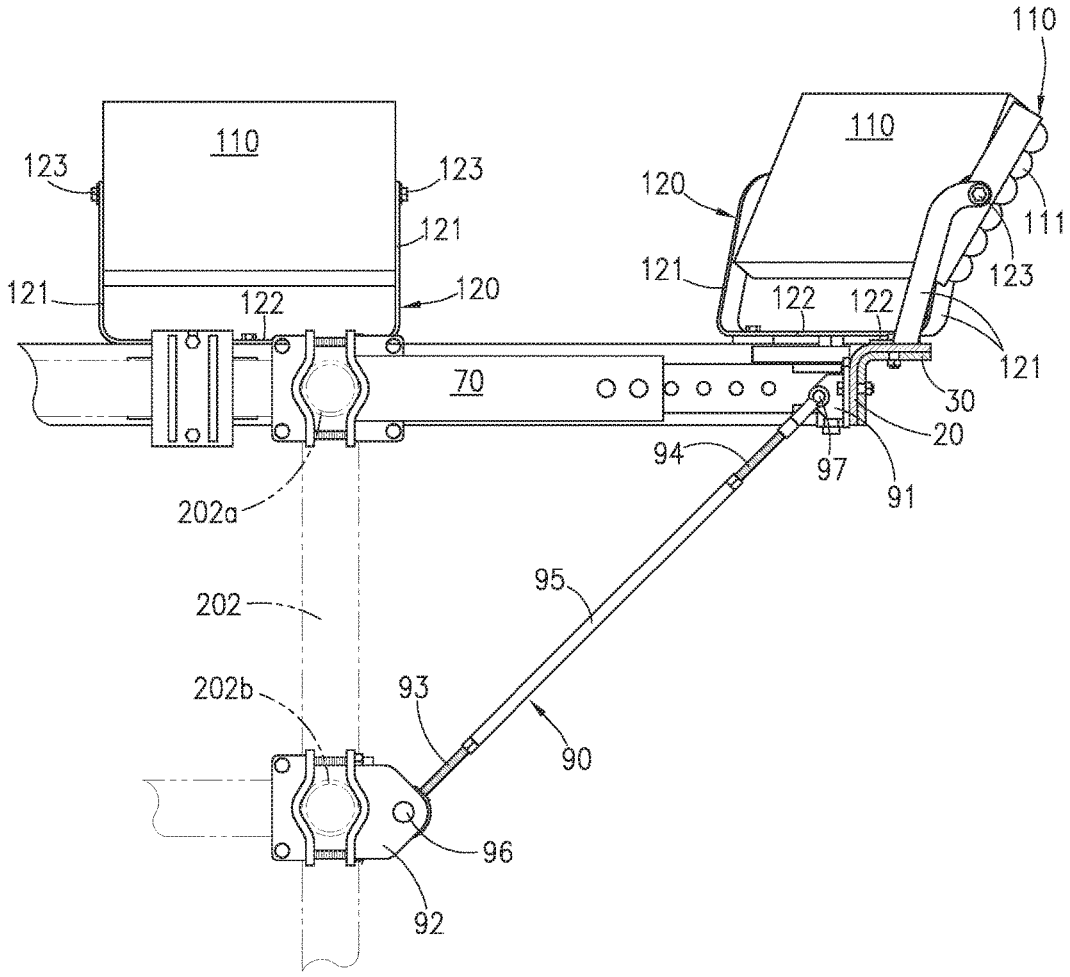
110
110
110
123
123
120
121
111
121
122
120
121
122
122
123
121
70
30
20
94
97
91
202a
95
202
202b
93
90
96
92

Fig. 5

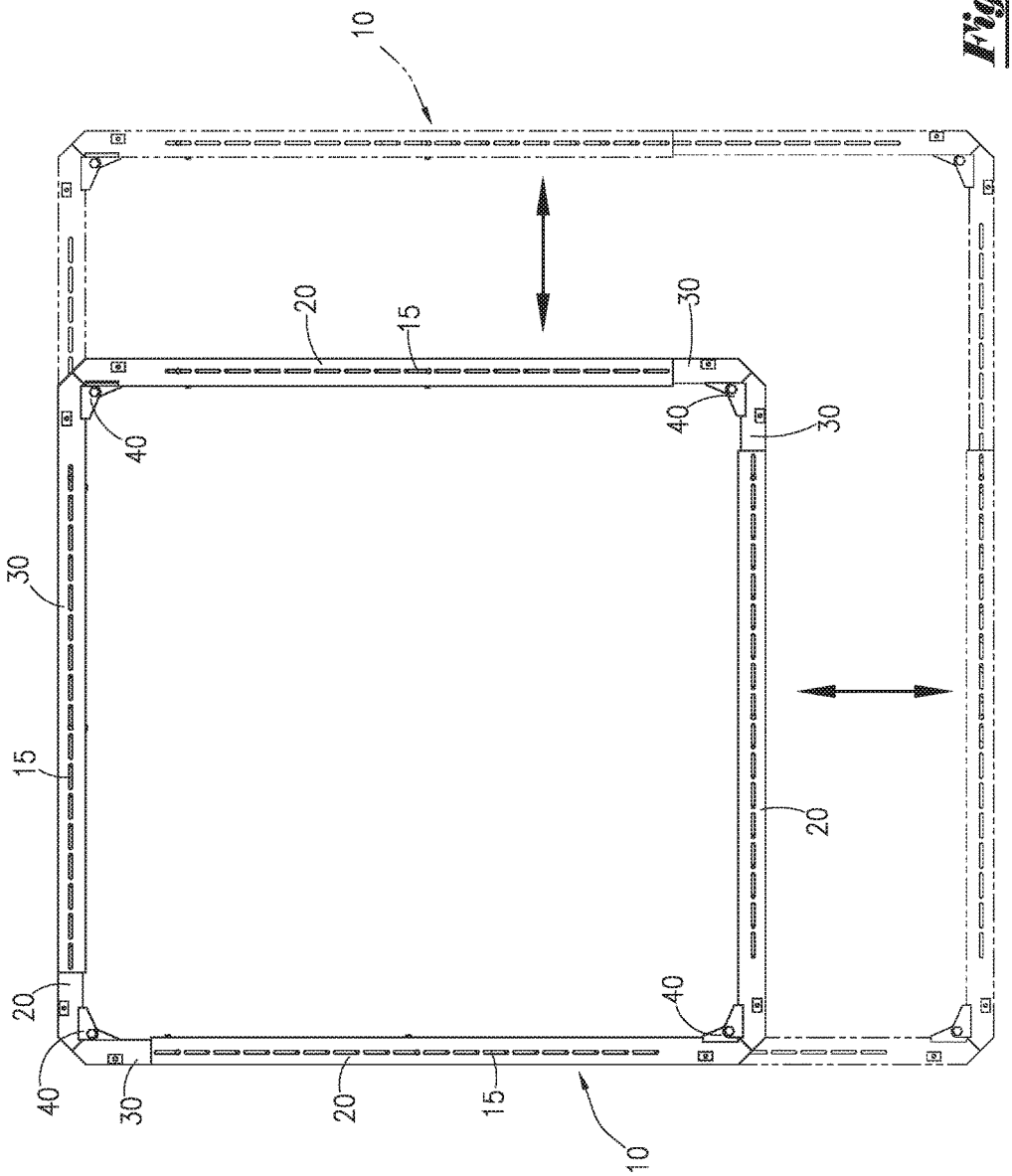

Fig.6

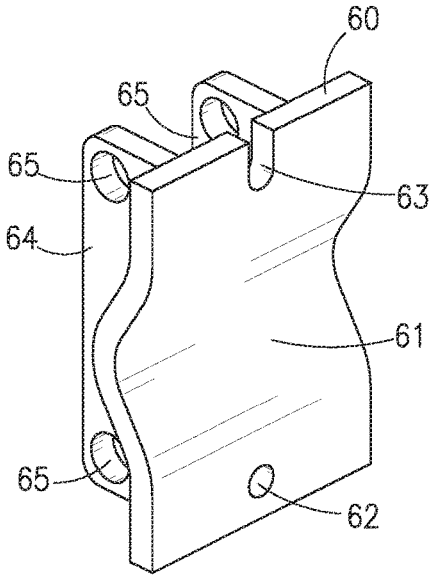

Fig. 7

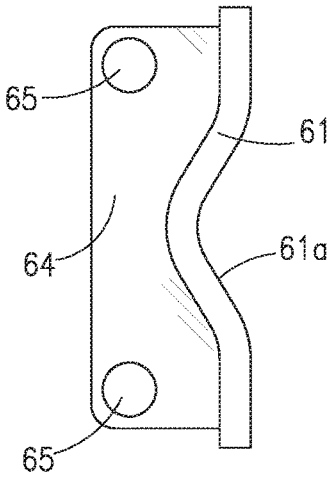

Fig. 8

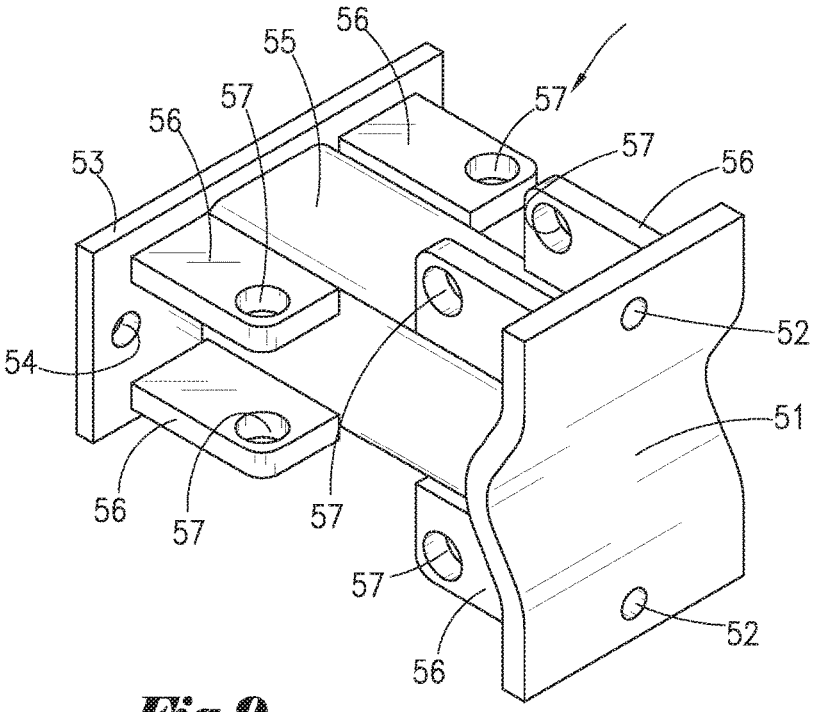

Fig.9

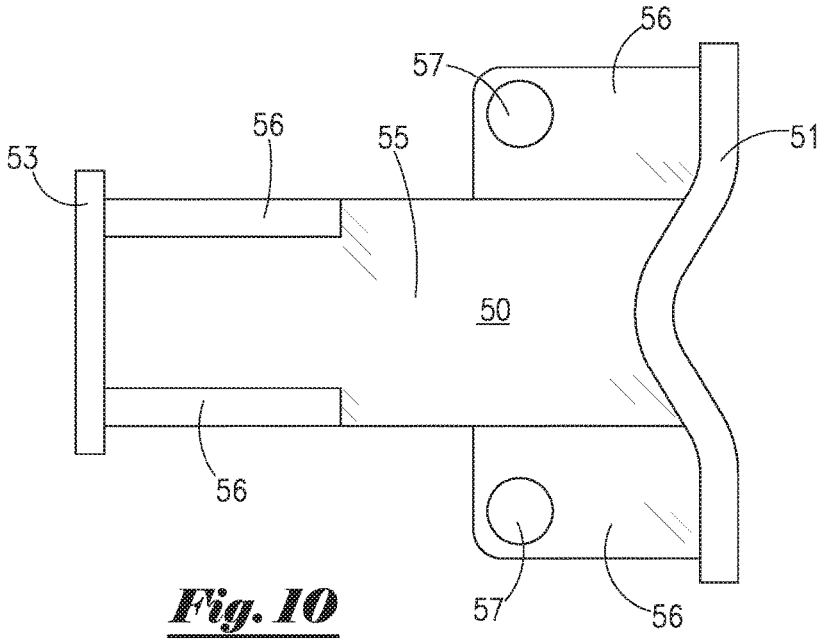

Fig. 10

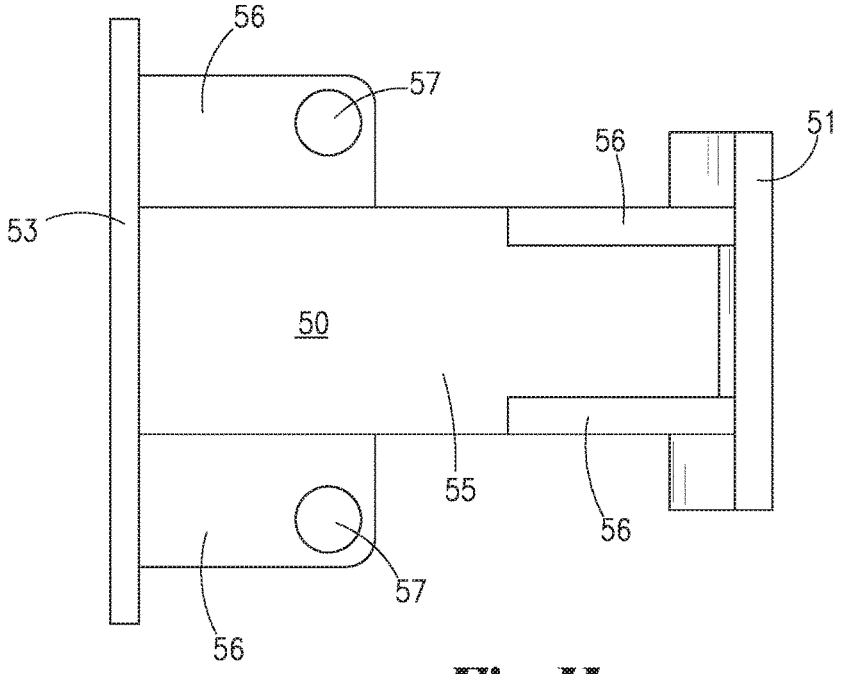

Fig. 11

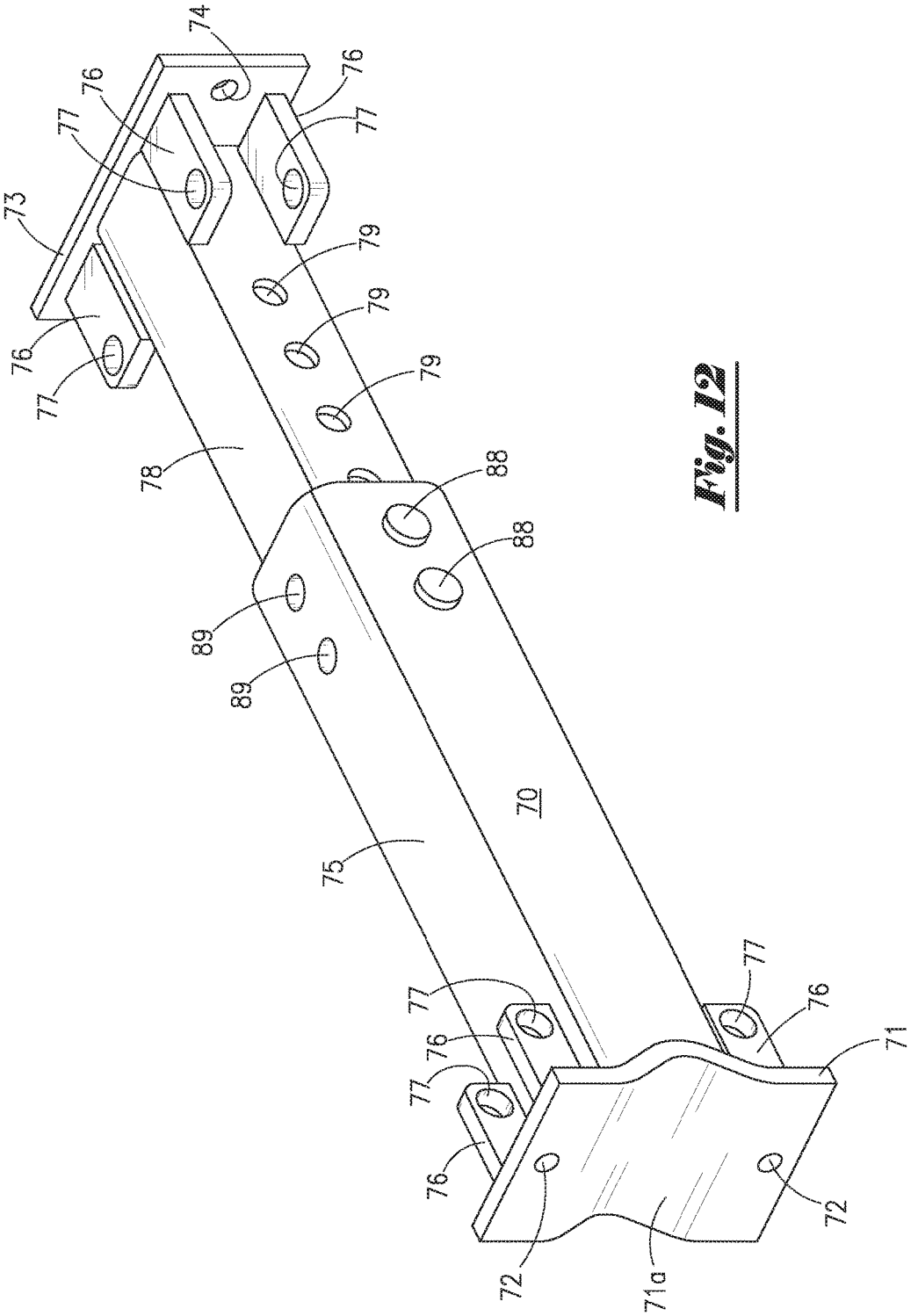

Fig. 12

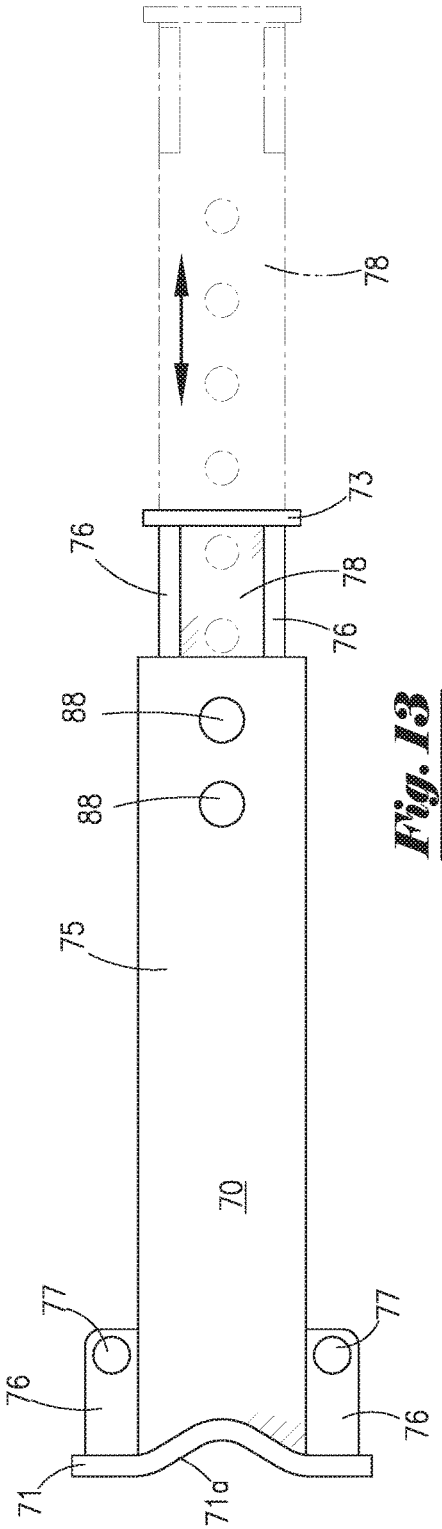
78
73
76
78
76
88
88
75
70
77
77
76
76
71
71a

Fig. 13

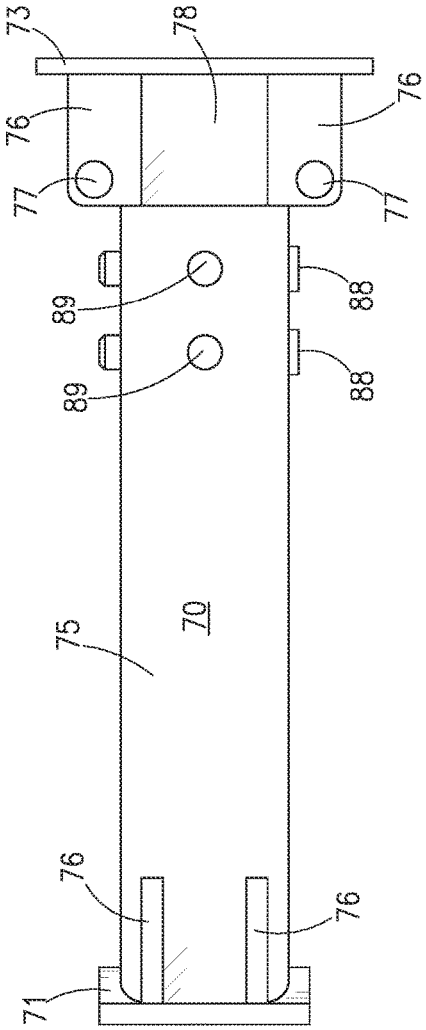
73
78
76
76
77
77
89
89
88
88
75
70
76
76
71

Fig. 14

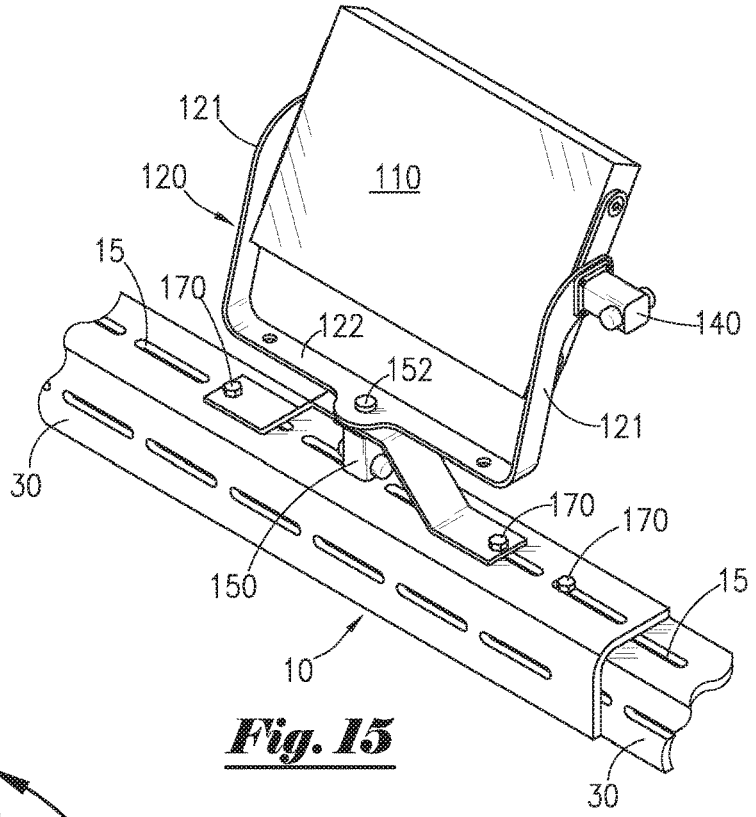

Fig. 15

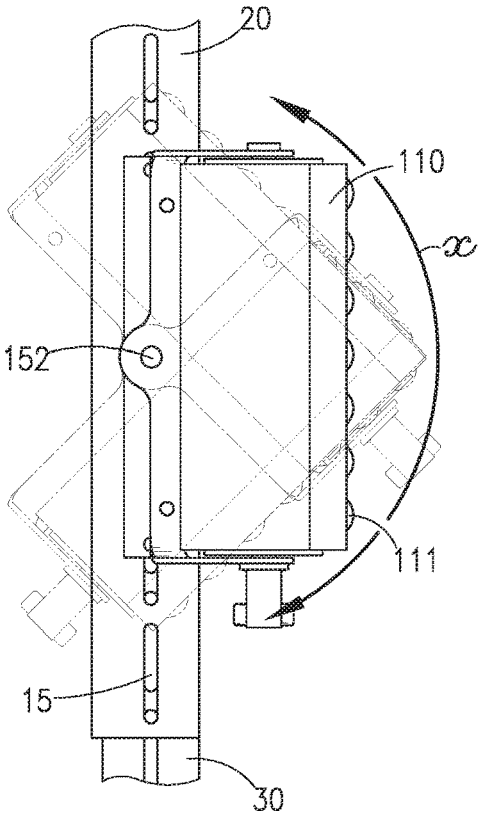

Fig. 16

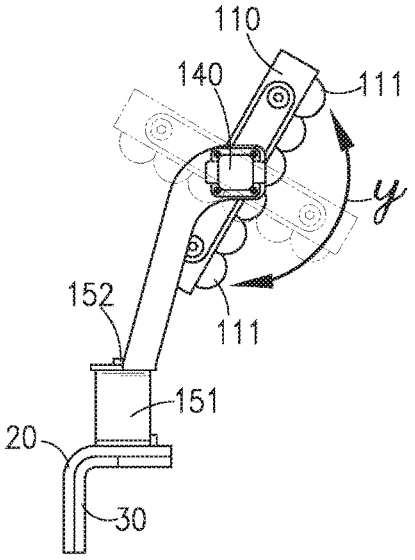

Fig. 17

METHOD AND APPARATUS FOR ILLUMINATION OF DRILLING RIGS AND SURROUNDING LOCATIONS

CROSS REFERENCES TO RELATED APPLICATION

Priority of U.S. Provisional Patent Application Ser. No. 62/442,023, filed Jan. 4, 2017, incorporated herein by reference, is hereby claimed.

STATEMENTS AS TO THE RIGHTS TO THE INVENTION MADE UNDER FEDERALLY SPONSORED RESEARCH AND DEVELOPMENT

NONE

BACKGROUND OF THE INVENTION

1. Field of the Invention

The present invention pertains to a lighting assembly for use in oil and gas and construction industries, and/or other applications, having a need for wide-area lighting and illumination. More particularly, the present invention pertains to a lighting assembly having an adjustable support frame assembly for attachably connecting said lighting assembly to a crown of a derrick of a drilling rig, thereby permitting illumination of a wide-area in and around said derrick with high quality light. More particularly still, the present invention pertains to a lighting assembly having number of beneficial advantages including, without limitation, ease, efficiency and safety of installation, use and removal, adaptability to different sizes and configurations of drilling rig derricks, and resistance to high winds and environmental influences.

2. Brief Description of the Prior Art

Oil and gas drilling operations are frequently conducted in remote and/or undeveloped areas with little or no surrounding development. In many cases, such locations also have little, if any, existing infrastructure. Such absence of surrounding development and existing infrastructure can result in a lack of proper lighting and illumination in and around a drilling rig and/or surrounding areas.

Conventional drilling rigs typically include a derrick or other elongate tower structure for supporting a hoist or other lifting apparatus. Typically, at least one lighting apparatus is disposed within said derrick and/or other ancillary structure on the drilling rig location. Such conventional lighting systems are typically not mounted at or near the upper extent of a conventional derrick due to the dissipation of light from such an elevated location. However, due to their positioning and quality, such conventional lighting systems typically illuminate only localized or relatively small areas, and lack the quality and intensity of light emission to sufficiently illuminate said entire drilling rig and surrounding areas.

As a result, there is a need for a lighting system that can illuminate an entire drilling rig or work area, while still being safe and efficient to install, use and disassemble when rig operations are complete.

SUMMARY OF THE INVENTION

In a preferred embodiment, the present invention comprises a high intensity lighting assembly for use in illuminating a wide area such as, for example, a drilling rig location and surrounding vicinity. The lighting assembly of the present invention comprises a lighting system and mounting support frame assembly that can be operatively attached to a drilling rig, ideally on or near a crown of said derrick. In a preferred embodiment, said mounting support frame assembly can be beneficially attached to a hand rail of a derrick crown. When so configured, the lighting assembly of the present invention can provide illumination of substantially all work areas in and around such derrick, such as, for example, a rig floor, mud pits, pipe racks, equipment staging areas and portable personnel buildings.

In a preferred embodiment, the lighting assembly of the present invention comprises an adjustable support frame assembly defining an inner gap or opening. Said support frame assembly can be manufactured from a relatively rigid and sturdy material such as steel, aluminum or composite material. Said support frame assembly further comprises a plurality of mounting bracket members attachable to each side of said support frame, thereby extending into said inner opening of said support frame assembly. Thus, said plurality of mounting bracket members can be used to mount and secure the support frame assembly to another object, such as, for example, a hand rail of a crown of a drilling rig derrick.

The lighting assembly of the present invention further comprises a plurality of light-emitting fixtures; said light-emitting fixtures can comprise light emitting diode (LED) lighting sources or other light-emitting devices having a high luminous efficacy. In a preferred embodiment, each of said light-emitting fixtures comprises a substantially planar LED light panel adjustably connected to said mounting frame. Each of said mounting frames is, in turn, attached to said mounting support frame assembly.

Said light-emitting fixtures can be selectively pointed or aimed in a substantially outward direction or other desired orientation relative to a drilling rig derrick crown. As such, said light-emitting fixtures can illuminate an entire area in and around said derrick and the surrounding location. As a result, the lighting assembly of the present invention provides for an easily attachable (and detachable) lighting system that can illuminate substantially all of a drilling rig or other work area.

Further, in an additional alternate embodiment, said support frame assembly can be mounted to said derrick crown (and, more particularly, a hand rail attached thereto) using at least one turnbuckle bracket. Each turnbuckle bracket comprise a plurality of arm extenders, wherein said arm extenders attachably connect said turnbuckle bracket to said support frame assembly.

BRIEF DESCRIPTION OF DRAWINGS/FIGURES

The foregoing summary, as well as any detailed description of the preferred embodiments, is better understood when read in conjunction with the drawings and figures contained herein. For the purpose of illustrating the invention, the drawings and figures show certain preferred embodiments. It is understood, however, that the invention is not limited to the specific methods and devices disclosed in such drawings or figures.

FIG. **1** depicts an overhead perspective view of a lighting assembly of the present invention deployed on a drilling rig derrick.

FIG. **2** depicts an exploded overhead perspective view of a lighting assembly of the present invention deployed on a drilling rig derrick.

FIG. **3** depicts an overhead view of a lighting assembly of the present invention deployed on a drilling rig derrick.

FIG. **4** depicts side sectional view of a lighting assembly of the present invention along line **4-4** of FIG. **3**.

FIG. **4***a* depicts a side sectional view of a first alternative embodiment lighting assembly of the present invention.

FIG. **4***b* depicts a side sectional view of a first alternative embodiment lighting assembly of the present invention.

FIG. **5** depicts side sectional view of a lighting assembly of the present invention along line **5-5** of FIG. **3**.

FIG. **6** depicts an overhead view a support frame assembly of the present invention in a partially collapsed and partially extended configuration.

FIG. **7** depicts a perspective view of a bracket plate member of the lighting assembly of the present invention.

FIG. **8** depicts a side view of a bracket plate member of the lighting assembly of the present invention.

FIG. **9** depicts a perspective view of a fixed mounting bracket assembly of the lighting assembly of the present invention.

FIG. **10** depicts a side view of a mounting bracket assembly of the lighting assembly of the present invention.

FIG. **11** depicts a side view of a fixed mounting bracket assembly of the lighting assembly of the present invention.

FIG. **12** depicts a perspective view of an alternative embodiment adjustable mounting bracket assembly of the lighting assembly of the present invention.

FIG. **13** depicts a side view of an alternative embodiment adjustable mounting bracket assembly of the lighting assembly of the present invention.

FIG. **14** depicts a side view of an alternative embodiment adjustable mounting bracket assembly of the lighting assembly of the present invention.

FIG. **15** depicts a rear perspective view of an alternative embodiment of the adjustable lighting assembly of the present invention.

FIG. **16** depicts an overhead view of an alternative embodiment of the adjustable lighting assembly of the present invention.

FIG. **17** depicts a side view of an alternative embodiment of the adjustable lighting assembly of the present invention.

DETAILED DESCRIPTION OF A PREFERRED EMBODIMENT

Referring to the drawings, FIG. **1** depicts an overhead perspective view of a lighting assembly **100** of the present invention deployed on a drilling rig derrick **200**. As depicted in FIG. **1**, drilling rig derrick **200** comprises a structural framework used to support a lifting apparatus and/or other components of a drilling rig. An upper section commonly referred to as a "crown" **201** is disposed at or near the top of said derrick **200**; on conventional drilling rigs, said crown **201** can support a crown block and/or sheave assembly (not pictured in FIG. **1**) used with a rig's hoisting system.

Still referring to FIG. **1**, a hand rail **202** is operationally attached to said crown **201**. Among other benefits, said hand rail **202** acts as a safety fence or barrier for personnel working on or around said crown **201** which, when deployed, is typically positioned at an elevated location of 300 feet or more above a drilling rig. As depicted in FIG. **1**, said hand rail **202** comprises a plurality of upwardly extending posts and substantially cylindrical tubular cross-members. However, it is to be observed that hand rail **202** can comprise posts and cross-members having different shapes or configurations such as, for example, square tubing, angle iron, flat members or the like.

In a preferred embodiment, the present invention comprises a lighting assembly for use in illuminating a wide area such as, for example, a drilling rig location and surrounding vicinity. The lighting assembly of the present invention comprises a lighting system and mounting support frame assembly that can be operatively attached to a drilling rig, ideally at or near a crown of said derrick. In a preferred embodiment, said mounting support frame assembly can be beneficially attached to a hand rail of a derrick crown. When so configured, the lighting assembly of the present invention can provide illumination of substantially all areas in and around such derrick, such as, for example, a rig floor, mud pits, pipe racks, equipment staging areas and portable personnel buildings.

In a preferred embodiment, lighting assembly **100** of the present invention comprises an adjustable support frame assembly constructed of a plurality of interlocking support frame members **10**. In the configuration depicted in FIG. **1**, said support frame members cooperate to define a substantially rectangular support frame assembly defining an inner gap or opening. Although a substantially rectangular configuration is preferred in most applications, it is to be observed that support frame members **10** can embody different shapes, and can cooperate to define a support frame assembly having a different (that is, non-rectangular) shape. In a preferred embodiment, said support frame assembly can be beneficially manufactured from a relatively rigid and robust material such as steel, aluminum or composite material.

Still referring to FIG. **1**, said support frame assembly formed by said support frame members **10** further comprises a plurality of mounting bracket assemblies **50** and **70**. Said mounting bracket assemblies **50** and **70** are operationally attached to said support frame assembly, and can be used to mount and secure the support frame assembly to another object, such as, for example, hand rail **202** on crown **201** of drilling rig derrick **200**.

FIG. **2** depicts an exploded overhead perspective view of lighting assembly **100** of the present invention deployed on a drilling rig derrick for use in illuminating a wide area such as, for example, a drilling rig location and surrounding vicinity. As depicted in FIG. **2**, hand rail **202** is operationally attached to crown **201** of derrick **200**, while a mounting support frame assembly can be operatively attached to said hand rail **202**.

In a preferred embodiment, lighting assembly **100** of the present invention comprises an adjustable support frame assembly constructed of a plurality of interlocking support frame members **10**. In the configuration depicted in FIG. **1**, each of said support frame members **10** comprise a first leg member **20** and second leg member **30** disposed at substantially a right angle (90-degrees) relative to each other. A corner member **40** is used to join said first leg member **20** and second leg member **30** of each support frame member **10**; in a preferred embodiment, said corner member **40** further comprises a hinge assembly, thereby permitting the size of the angle formed between said first leg member **20** and second leg member **30** to be selectively adjusted. When joined, said plurality of interlocking support frame members **10** cooperate to define a substantially rectangular support frame assembly.

As noted above, said support frame members **10** are manufactured from a relatively rigid and robust material such as steel, aluminum or composite material. In the

embodiment depicted in FIG. **2**, said first leg members **20** and second leg members **30** of said support frame members **10** comprise angle irons (i.e., structures having at least two sides oriented at a substantially perpendicular configuration relative to each other). However, it is to be observed that said support frame members **10** can have a different shape or configuration—such as, for example, square or cylindrical tubing—without departing from the scope of the present invention.

Lighting assembly **100** of the present invention further comprises a plurality of light-emitting light sources **110** disposed in spaced relationship around said support frame assembly formed by interlocking support frame members **10**. In a preferred embodiment, said light-emitting light sources **110** can comprise light emitting diode (LED) lighting sources or another light-emitting devices having a high luminous efficacy and wide-area light distribution.

In a preferred embodiment depicted in FIGS. **1** and **2**, said light-emitting light sources **110** each comprise a substantially planar and rectangular light panel adjustably connected to a mounting framework **120**. Each of said mounting frameworks **120** is, in turn, attached to a mounting support frame member **10** using a plurality of threaded bolts/nuts, fasteners or other temporary but robust attachment means. Further, said light-emitting light sources **110** are aimed or pointed in a substantially outward direction or orientation relative to a derrick crown **201**, thus, permitting said light sources **110** to collectively illuminate substantially the entire area in and around said derrick **200**, as well as a surrounding drilling rig and associated work location.

Still referring to FIG. **2**, said support frame assembly further comprises a plurality of mounting bracket assemblies **50** and **70**. Fixed mounting bracket assemblies **50** have a fixed length, while adjustable mounting bracket assemblies **70** have an adjustable length. Said mounting bracket assemblies **50** and **70** can be operationally attached to support frame members **10**, and can be used to mount and secure said cooperating, interlocking support frame members **10** to hand rail **202**. Additionally, optional turnbuckle bracket assemblies **90** further connect support frame members **10** to hand rail **202**; in many cases, said optional turnbuckle bracket assemblies **90** can be used to connect cooperating support frame members **10** to different (typically lower) cross-members of hand rail **202** than mounting bracket assemblies **50** and **70**.

FIG. **3** depicts an overhead view of lighting assembly **100** of the present invention deployed on hand rail **202** of crown **201** of a drilling rig derrick **200**. As depicted in FIG. **3**, a combination of fixed mounting bracket assemblies **50** and adjustable mounting bracket assemblies **70** are used to mount and secure said cooperating frame members **10** to hand rail **202**, resulting in greater stand-off distance between said frame members **10** and hand rail **202** in certain areas (where adjustable mounting bracket assemblies **70** are deployed), and less stand-off distance between said frame members **10** and hand rail **202** in other areas (where fixed mounting bracket assemblies **50** are deployed). It is to be observed that the configuration depicted in FIGS. **1** through **3** is for illustration purposes only, and lighting assembly **100** can be mounted using only fixed mounting bracket assemblies **50**, or adjustable mounting bracket assemblies **70**, without departing from the scope of the present invention.

FIG. **6** depicts an overhead view of an adjustable support frame assembly of a lighting assembly **100** of the present invention in a partially collapsed and partially extended configuration for comparison purposes. As discussed above, adjustable support frame assembly comprises a plurality of interlocking support frame members **10**. In the configuration depicted in FIG. **6**, each of said support frame members **10** comprise a first leg member **20** and second leg member **30** disposed at substantially a right angle (90-degrees) relative to each other. A corner member **40** is used to join each of said first leg members **20** to said second leg members **30**. When joined, said interlocking support frame members **10** cooperate to define a substantially rectangular support frame assembly; further, said interlocking support frame members **10** can be selectively extended to increase the length of the sides of said constructed support frame assembly, or collapsed to decrease the length of the sides of said constructed support frame assembly.

Still referring to FIG. **6**, in a preferred embodiment, a plurality of elongate slots or apertures **15** extend through each of said first leg members **20** and second leg members **30**, typically disposed in spaced relationship along substantially the entire length of said first leg members **20** and second leg members **30**. The longitudinal axes of said apertures **15** are oriented substantially parallel to the longitudinal axes of said first leg members **20** and second leg members **30** through which said apertures **15** extend. When a first leg member **20** of a first support frame member **10** is disposed near a second leg member **30** of an adjacent (separate) support frame member **10** in overlapping relationship, said elongate apertures **15** of said first and second leg members are substantially aligned with each other.

Threaded bolts/nuts or other fasteners can be installed within said aligned apertures **15** in order to secure said first and second leg members together, thereby operationally attaching multiple support frame members **10** together in interlocking relationship. Further, light sources **110** (not depicted in FIG. **6**) can be attached to said support frame members **10**. Said light sources can be selectively mounted at desired locations along support frame members **10** and secured in place using threaded bolts/nuts or other fasteners disposed within elongate slots **15**, thereby permitting selective placement of said light sources **110** around the perimeter of the support frame assembly formed by said interlocking support frame members **10**.

FIG. **4** depicts side sectional view of a portion of lighting assembly **100** of the present invention along line **4-4** of FIG. **3**. A first leg member **20** and second leg member **30** comprise angle irons and are joined together in overlapping relationship. Said first leg member **20** and second leg member **30** are mounted to a cross-member **202***a* of crown hand rail **202** using fixed mounting bracket assembly **50**. As depicted in FIG. **4**, said fixed mounting bracket assembly **50** is co-planar with said cross-member **202***a* of hand rail **202**, and extends in substantially perpendicular orientation from said cross-member **202***a*.

Light-emitting light source **110** comprises a panel having a plurality of light emitting diode (LED) lighting elements **111** having a high luminous efficacy. Said light-emitting light source **110** is adjustably connected to a mounting frame **120**; said mounting frame **120** generally comprises side mounting arms **121** and lower base member **122**. In a preferred embodiment, said light source **110** is pivotally mounted to said side mounting arms **121** using pivot pins **123**. Said mounting frame **120** is, in turn, attached to interlocked support frame leg members **20** and **30** using a plurality of threaded bolts/nuts, fasteners or other temporary but robust attachment means.

It is to be observed that said interlocking first leg member **20** and second leg member **30** can have a different shape or configuration without departing from the scope of the present invention. FIG. **4***a* depicts a side sectional view of a first

alternative embodiment lighting assembly **100** of the present invention wherein said first leg member **20** and second leg member **30** are constructed of square tubing, and wherein said second leg member **30** is telescopically received within an inner bore of said first leg member **20**. Similarly, FIG. **4***b* depicts a side sectional view of a second alternative embodiment lighting assembly **100** of the present invention, wherein said first leg member **20** and second leg member **30** are constructed of cylindrical tubing, and wherein said second leg member **30** is telescopically received within an inner bore of said first leg member **20**.

FIG. **5** depicts a side sectional view of a lighting assembly **100** of the present invention along line **5-5** of FIG. **3**. A first leg member **20** and second leg member **30** comprise angle irons and are joined together in overlapping relationship. Said first leg member **20** and second leg member **30** are mounted to a cross-member **202***a* of crown hand rail **202** using adjustable mounting bracket assembly **70**. As depicted in FIG. **5**, said adjustable mounting bracket assembly **70** is co-planar with said cross-member **202***a* of hand rail **202**, and extends in substantially perpendicular orientation from said cross-member **202***a*. The length of said adjustable mounting assembly **70**, and thus the stand-off distance between said interlocking first and second leg members (**20** and **30**), and said cross-member **202***a* of hand rail **202**, can be selectively increased or decreased as desired.

As depicted in FIG. **5**, light-emitting light source **110** comprises a panel having a plurality of light emitting diode (LED) lighting elements **111**. Said light-emitting light source **110** is adjustably connected to a mounting frame **120** comprising side mounting arms **121** and lower base member **122**. In a preferred embodiment, said light source **110** is pivotally mounted to said side mounting arms **121** using pivot pins **123**. Said mounting framework **120** is, in turn, attached to joined support frame leg members **20** and **30** using a plurality of threaded bolts/nuts, fasteners or other temporary but robust attachment means.

It is to be observed that said interlocking first leg member **20** and second leg member **30** can have a different shape or configuration without departing from the scope of the present invention. FIG. **4***a* depicts a side sectional view of a first alternative embodiment lighting assembly **100** of the present invention wherein said first leg member **20** and second leg member **30** are constructed of square tubing, wherein said second leg member **30** is telescopically received within an inner bore of said first leg member **20**. Similarly, FIG. **4***b* depicts a side sectional view of a second alternative embodiment lighting assembly **100** of the present invention, wherein said first leg member **20** and second leg member **30** are constructed of cylindrical tubing, and wherein said second leg member **30** is telescopically received within an inner bore of said first leg member **20**.

Still referring to FIG. **5**, optional turnbuckle bracket assembly **90** further connects first leg member **20** and second leg member **30** of support frame members **10** to hand rail **202**. As depicted in FIG. **5**, turnbuckle bracket assembly **90** can be used to connect said cooperating support frame members **10** to cross-member **202***b* of hand rail **202**, which is situated below hand rail cross-member **202***a*. In a preferred embodiment, said turnbuckle assembly **90** generally comprises lower threaded bolt **93** pivotally attached to mounting bracket **92** with pivot pin **96**, as well as upper threaded bolt **94** pivotally attached to mounting bracket **91** with pivot pin **97**. Threaded body member **95** is threadedly connected to said lower threaded bolt **93** and upper threaded bolt **94**. Tension forces across said turnbuckle assembly **90** can be selectively increased or decreased by rotating said threaded body member **95** in a desired direction. Said turnbuckle assembly **90** provides additional support for the attachment of lighting assembly **100** to hand rail **202**; said additional support provides added strength in the event of uneven or excessive loading on said lighting assembly **100** (such as from wind or other forces).

FIG. **7** depicts a perspective view of a bracket plate member **60** of lighting assembly **100** of the present invention, while FIG. **8** depicts a side view of said bracket plate member **60**. Referring to FIGS. **7** and **8**, bracket plate member **60** comprises contact face plate **61** having curved inner surface **61***a*; said curved inner surface **61***a* is beneficially shaped and sized to conform to the outer surface of a cross-member of a crown hand-rail (such as, for example, cross-member **202***a* depicted in FIG. **4**). Aperture **62** and slot **63** extend through said contact face plate **61**. Planar bracket plates **64** extend from said contact face plate **61**, while a plurality of transverse bores **65** extend through said planar bracket plates **64**.

FIG. **9** depicts a perspective view of a fixed-length mounting bracket assembly **50** of the lighting assembly **100** of the present invention. FIG. **10** depicts a side view of said fixed mounting bracket assembly **50**, while FIG. **11** depicts a side view of said mounting bracket assembly **50**. Referring to FIGS. **9** through **11**, mounting bracket assembly **50** comprises contact face plate **51** having curved inner surface **51***a*; said curved inner surface **51***a* is beneficially shaped and sized to conform to the outer surface of a cross-member of a crown hand-rail (such as, for example, cross-member **202***a* depicted in FIG. **4**). Apertures **52** extend through said contact face plate **51**. Planar bracket plates **56** extend from said contact face plate **51**, while a plurality of transverse bores **57** extend through said planar bracket plates **56**.

Mounting bracket assembly **50** further comprises mounting plate **53**; in a preferred embodiment, said mounting plate **53** has a substantially planar shape. Said planar shape is beneficially shaped and sized to conform to the outer surface of a support frame member **10** (such as depicted in FIG. **3**). Apertures **54** extend through said contact mounting plate **54**. Planar bracket plates **56** extend from said mounting plate **54**, while a plurality of transverse bores **57** extend through said planar bracket plates **56**.

Still referring to FIGS. **9** through **11**, central body member **55** extends between contact face plate **51** and mounting plate **53**. In a preferred embodiment, said central body member **53** has sufficient rigidity and strength to support lighting apparatus **100** of the present invention when attached to the hand rail of the crown of a drilling rig derrick, including when increased loading results from high winds or other environmental factors. Further, the length of said central body member **53** can be preselected based on a desired stand-off distance between a crown hand rail (such as hand rail **202** depicted in FIG. **3**) and support frame members of the present invention (such as support frame members **10** depicted in FIG. **3**).

FIG. **12** depicts a perspective view of adjustable mounting bracket assembly **70** of the lighting assembly **100** of the present invention. FIG. **13** depicts a side view of an adjustable mounting bracket assembly **70**, while FIG. **14** depicts a side view of said mounting bracket assembly **70**. Referring to FIGS. **12** through **14**, adjustable mounting bracket assembly **70** comprises contact face plate **71** having curved inner surface **71***a*; said curved inner surface **71***a* is beneficially shaped and sized to conform to the outer surface of a cross-member of a crown hand-rail (such as, for example, cross-member **202***a* depicted in FIG. **4**). Apertures **72** extend through said contact face plate **71**. Planar bracket plates **76**

extend from said contact face plate **71**, while a plurality of transverse bores **77** extend through said planar bracket plates **76**.

Adjustable mounting bracket assembly **70** further comprises mounting plate **73**; in a preferred embodiment, said mounting plate **73** has a substantially planar shape. Said planar shape is beneficially shaped and sized to conform to the outer surface of a support frame member **10** (such as depicted in FIG. **3**). Apertures **74** extend through said contact mounting plate **74**. Planar bracket plates **76** extend from said mounting plate **74**, while a plurality of transverse bores **77** extend through said planar bracket plates **76**.

Still referring to FIGS. **12** through **14**, central body member **75** extends from contact face plate **71**. In a preferred embodiment, said central body member **75** comprises a central longitudinal bore; elongate body extension member **78** is slidably disposed within said central bore of body member **75**, with mounting plate **73** disposed at its distal end. Said elongate body extension member **78** can be telescopically extended or retracted relative to body member **75**, in order to selectively adjust (i.e., increase or decrease) the distance between said contact face plate **71** and mounting plate **73**. A plurality of transverse apertures **89** extend through body member **75**, while a plurality of transverse apertures **79** similarly extend through body extension member **78**. When apertures **89** and **79** are aligned, pins **88** can be received within said aligned apertures **89** and **79** and secured in place.

Elongate body extension member **78** and body member **75** have sufficient rigidity and strength to support lighting apparatus **100** of the present invention when attached to the hand rail of the crown of a drilling rig derrick, including when increased loading results from high winds or other environmental factors. Further, the overall length of said adjustable mounting bracket **70**—that is, the distance from contact face plate **71** to mounting plate **73**—can be adjusted based on a desired stand-off distance between a crown hand rail (such as hand rail **202** depicted in FIG. **3**) and support frame members of the present invention (such as support frame members **10** depicted in FIG. **3**).

FIG. **15** depicts a rear perspective view of an alternative embodiment of the adjustable lighting assembly of the present invention. As previously discussed, light-emitting light source **110** comprises a panel having a plurality of light emitting diode (LED) lighting elements **111**. Said light-emitting light source **110** is adjustably connected to a mounting framework **120** comprising side mounting arms **121** and lower base member **122**. In the alternative embodiment depicted in FIG. **15**, said light source **110** is pivotally mounted to said side mounting arms **121** using servo motor **140**. Base **122** of mounting framework **120** is pivotally attached to drive shaft **152** of servo motor **150**. Base plate **151** is attached to joined support frame leg members **20** and **30** using a plurality of threaded fasteners **170**.

FIG. **16** depicts an overhead view of the alternative embodiment of the adjustable lighting assembly of the present invention depicted in FIG. **15**, while FIG. **17** depicts a side view of said alternative embodiment. Referring to FIG. **16**, actuation of servo motor **150** results in rotation of light source **110** about an axis passing through drive shaft **152**. In this manner, light source **110** can move about a rotation arc designated "x" in FIG. **16** which, in typical installation configurations, is side-to-side rotation about a substantially vertical axis. Referring to FIG. **17**, actuation of servo motor **140** results in rotation of light source **110** about an axis that is substantially perpendicular to drive shaft **152**. In this manner, light source **110** can move about a rotation arc designated "y" in FIG. **16** which, in typical installation configurations, is up-down rotation about a substantially horizontal axis.

In a preferred embodiment, servo motors **140** and **150** can be controlled from a remote location away from derrick crown using wired or wireless controller(s); said wireless controller(s) can comprise radio frequency controllers or other wireless controller technology well known to those having skill in the art. Such remote control permits selective aiming or orientation of light sources **110** to direct light or illumination to desired areas in an around a drilling rig derrick.

Referring to FIG. **3**, in operation support frame members **10** can be separately transported to a rig or other location. Said support frame members **10** can be joined in interlocking relationship; in the configuration depicted in FIG. **3**, said support frame members can comprise a substantially square or rectangular configuration defining an inner opening. Said square or rectangular configuration can be sized such that a crown **201** of a drilling rig derrick **200** can be received within said inner opening—that is, said support frame members **10** can substantially surround said crown of a drilling rig derrick.

A plurality of mounting brackets (either fixed-length brackets **50** or adjustable-length brackets **70**, or a combination thereof) can be attached and secured to cross-members of a hand rail **202** of a derrick crown **201**. Face plates **51** of mounting brackets **50** can be attached to said hand rail members using bracket plate members **60** and elongate threaded bolts. Similarly, face plates **71** of mounting brackets **70** can be attached to said hand rail members using bracket plate members **60** and elongate threaded bolts. Said mounting brackets (plates **53** or **73** thereof) are connected to support frame members **10**. At least one optional turnbuckle assembly **90** can extend from said hand rail **202** to said support frame member **10** in order to provide additional support.

Light-emitting light sources **110** each comprise a substantially planar and rectangular LED light panel adjustably connected to a mounting framework **120**. Each of said mounting frameworks **120** is, in turn, attached to a mounting support frame member **10** using a plurality of threaded bolts/nuts, fasteners or other temporary but robust attachment selectively positioned within elongate slots **15** (depicted in FIG. **6**). Further, said light-emitting light sources **110** are aimed or pointed in a substantially outward direction or orientation relative to a derrick crown **201**, thus, permitting said light sources **110** to collectively illuminate substantially the entire area in and around said derrick **200**, as well as a surrounding drilling rig and associated work location.

The above-described invention has a number of particular features that should preferably be employed in combination, although each is useful separately without departure from the scope of the invention. While the preferred embodiment of the present invention is shown and described herein, it will be understood that the invention may be embodied otherwise than herein specifically illustrated or described, and that certain changes in form and arrangement of parts and the specific manner of practicing the invention may be made within the underlying idea or principles of the invention.

What is claimed:

1. A lighting apparatus for illuminating a drilling rig and surrounding location comprising:

a) a support frame assembly defining a central opening;

b) a plurality of light sources disposed along said support frame assembly; and

c) a plurality of mounting brackets for operationally attaching said support frame assembly directly to a hand rail having an upper surface on a crown of a derrick, wherein said hand rail is disposed within said central opening of said support frame assembly, and said support frame assembly does not extend substantially above said upper surface of said hand rail; and

d) at least one turnbuckle bracket having a first end and a second end, wherein said first end is operationally attached to said support frame assembly and said second end is operationally attached to said hand rail below said upper surface of said hand rail.

2. The lighting apparatus of claim **1**, wherein said support frame assembly comprises a plurality of rigid members, wherein said rigid members are disposed in interlocking arrangement.

3. The lighting apparatus of claim **2**, wherein said rigid members comprise angle iron, square tubing or cylindrical tubing.

4. The lighting apparatus of claim **1**, wherein said plurality of mounting brackets comprises:

a) a face plate attached to a cross-member of said hand rail;

b) a mounting plate attached to said support frame; and

c) a substantially linear and rigid member having a fixed length extending between said face plate and said mounting plate.

5. The lighting apparatus of claim **1**, wherein at least one of said plurality of mounting brackets comprises:

a) a face plate attached to a cross-member of said hand rail;

b) a mounting plate attached to said support frame; and

c) a substantially linear and rigid member between said face plate and said mounting plate, wherein the length of said rigid member be selectively extended or retracted.

6. The lighting apparatus of claim **1**, wherein said light sources further comprise:

a) a mounting frame pivotally attached to said support frame assembly; and

b) a panel having a plurality of light emitting diodes, wherein said panel is pivotally attached to said mounting frame.

7. The lighting apparatus of claim **6**, further comprising:

a) at least one servo motor configured to rotate said panel relative to said mounting frame; and

b) at least one servo motor configured to rotate said mounting frame relative to said support frame assembly.

8. The lighting apparatus of claim **1**, wherein said servo motors are remotely controlled from a location away from said derrick crown.

* * * * *