US011050615B2

(12) **United States Patent**
Mathews et al.

(10) **Patent No.: US 11,050,615 B2**
(45) **Date of Patent: *Jun. 29, 2021**

(54) **APPARATUS AND METHOD FOR SEAMLESS COMMISSIONING OF WIRELESS DEVICES**

(71) Applicant: **GOOGLE LLC**, Mountain View, CA (US)

(72) Inventors: **Jeffrey P. Mathews**, Longmont, CO (US); **Lee R. Taylor**, Boulder, CO (US)

(73) Assignee: **Google LLC**, Mountain View, CA (US)

(*) Notice: Subject to any disclaimer, the term of this patent is extended or adjusted under 35 U.S.C. 154(b) by 0 days.

This patent is subject to a terminal disclaimer.

(21) Appl. No.: **16/708,189**

(22) Filed: **Dec. 9, 2019**

(65) **Prior Publication Data**

US 2020/0244522 A1 Jul. 30, 2020

Related U.S. Application Data

(63) Continuation of application No. 15/960,337, filed on Apr. 23, 2018, now Pat. No. 10,505,797, which is a (Continued)

(51) **Int. Cl.**
H04L 12/24 (2006.01)
H04W 76/10 (2018.01)
(Continued)

(52) **U.S. Cl.**
CPC ***H04L 41/0806*** (2013.01); ***H04B 10/116*** (2013.01); ***H04W 4/70*** (2018.02);
(Continued)

(58) **Field of Classification Search**
CPC H04W 84/18; H04W 4/005; H04W 4/008; H04W 84/12; H04W 4/70; H04W 4/80;
(Continued)

(56) **References Cited**

U.S. PATENT DOCUMENTS

4,049,973 A 9/1977 Lambert
4,393,342 A 7/1983 Matsuoka et al.
(Continued)

OTHER PUBLICATIONS

Kim et al., "A New Commissioning and Deployment Method for Wireless Sensor Networks", Oct. 11-16, 2009, IEEE, 2009 Third International Conference on Mobile Ubiquitous Computing, Systems, Services and Technologies, pp. 232-237, DOI: 10.1109/UBICOMM.2009.63 (Year: 2009).*
(Continued)

Primary Examiner — Paul H Masur
(74) *Attorney, Agent, or Firm* — Butzel.Long

(57) **ABSTRACT**

An electronic device includes a first processor; a first commissioning element to communicate with external devices using wireless communication and a first memory storing programs for commissioning a target device onto a communication network. The communication network has configuration data including a network identifier and a network key. The programs provide a user interface for commissioning the target device. The target device includes a second processor, a second wireless radio, and a second commissioning element to receive the network configuration data. The target device decodes the network configuration data to commission the target device onto the communication network. The electronic device sends the network configuration data to the target device and receives confirmation that the target device has successfully connected to the communication network. The electronic device displays the success in a user interface.

20 Claims, 6 Drawing Sheets

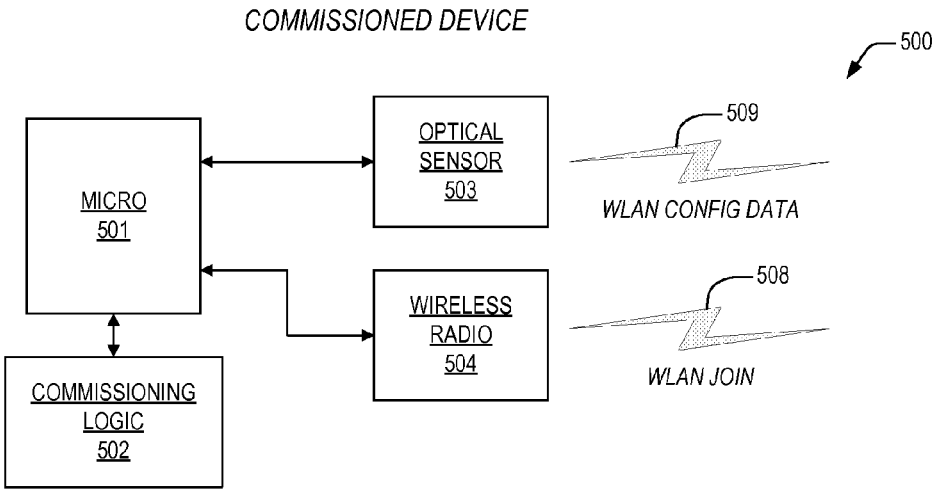

Related U.S. Application Data

continuation of application No. 15/452,654, filed on Mar. 7, 2017, now Pat. No. 9,998,325, which is a continuation of application No. 15/159,735, filed on May 19, 2016, now Pat. No. 9,591,690, which is a continuation of application No. 14/927,406, filed on Oct. 29, 2015, now Pat. No. 9,485,790, which is a continuation of application No. 13/839,828, filed on Mar. 15, 2013, now Pat. No. 9,198,204.

(60) Provisional application No. 61/622,620, filed on Apr. 11, 2012.

(51) **Int. Cl.**

H04W 4/80	(2018.01)
H04W 4/70	(2018.01)
H04W 84/18	(2009.01)
H04B 10/116	(2013.01)
H04W 84/12	(2009.01)

(52) **U.S. Cl.**
CPC ***H04W 4/80*** (2018.02); ***H04W 76/10*** (2018.02); ***H04W 84/18*** (2013.01); *H04W 84/12* (2013.01)

(58) **Field of Classification Search**
CPC H04W 76/10; H04L 41/0803; H04L 41/0806; H04B 10/116
See application file for complete search history.

(56) **References Cited**

U.S. PATENT DOCUMENTS

5,838,226	A	11/1998	Houggy
6,597,396	B1	7/2003	Quendt
7,260,597	B1	8/2007	Hofrichter et al.
7,352,930	B2	4/2008	Lowles
7,570,485	B2	8/2009	Krah
7,752,329	B1	7/2010	Meenan
7,830,258	B2	11/2010	McAllister
7,953,327	B2	5/2011	Pereira et al.
7,961,674	B2	6/2011	Jing et al.
7,965,983	B1	6/2011	Swan et al.
8,049,434	B2	11/2011	Crouse et al.
8,096,695	B2	1/2012	Ong
8,156,500	B2	4/2012	Helander
8,161,420	B2	4/2012	Ding
8,204,979	B2	6/2012	Vutharkar et al.
8,228,198	B2	7/2012	McAllister
8,239,928	B2	8/2012	Huang et al.
8,265,674	B2	9/2012	Choong et al.
8,279,158	B2	10/2012	Lowles et al.
8,295,990	B2	10/2012	Venkatakrishnan et al.
8,370,370	B2	2/2013	Huang et al.
8,406,819	B2	3/2013	Steer et al.
8,407,347	B2	3/2013	Zhang et al.
8,409,001	B2	4/2013	Chang
8,471,500	B2	6/2013	Fletcher et al.
8,478,450	B2	7/2013	Lu et al.
8,508,465	B2	8/2013	Broga et al.
8,519,844	B2	8/2013	Richey et al.
8,543,688	B1	9/2013	Ramamurthy
8,576,276	B2	11/2013	Bar-zeev et al.
8,577,378	B2	11/2013	Nagaraja et al.
8,606,645	B1	12/2013	Applefeld
8,613,070	B1	12/2013	Borzycki et al.
8,653,760	B1	2/2014	Pearce et al.
8,688,392	B2	4/2014	Tam et al.
8,823,795	B1	9/2014	Scalisi et al.
8,843,995	B2	9/2014	Buckley et al.
8,942,694	B2	1/2015	Woo
9,009,805	B1	4/2015	Kirkby et al.
9,207,659	B1	12/2015	Sam I
9,325,516	B2	4/2016	Pera et al.
9,326,126	B2	4/2016	Yang
9,401,901	B2	7/2016	Huang et al.
9,412,266	B2	8/2016	Chen et al.
9,419,871	B2	8/2016	Foley et al.
9,462,624	B2	10/2016	Logue
9,479,504	B2	10/2016	Bae et al.
9,488,994	B2	11/2016	Zywicki et al.
9,528,861	B1	12/2016	Haupt et al.
9,547,980	B2	1/2017	Chen et al.
9,554,061	B1	1/2017	Proctor, Jr.
9,800,429	B2	10/2017	Crayford et al.
9,948,685	B2	4/2018	Na et al.
10,262,210	B2	4/2019	Kirkby et al.
2001/0016492	A1	8/2001	Igarashi
2002/0016639	A1	2/2002	Smith et al.
2002/0178385	A1	11/2002	Dent et al.
2003/0061284	A1	3/2003	Mandarino et al.
2003/0067394	A1	4/2003	Tsui
2003/0169728	A1	9/2003	Choi
2004/0083393	A1	4/2004	Jordan et al.
2004/0243257	A1	12/2004	Theimer
2005/0041686	A1	2/2005	Roy et al.
2005/0281277	A1	12/2005	Killian
2006/0109988	A1	5/2006	Metcalf
2006/0174102	A1	8/2006	Smith et al.
2006/0259183	A1	11/2006	Hayes et al.
2007/0014303	A1	1/2007	Schulz et al.
2007/0105542	A1	5/2007	Friedman
2007/0250592	A1	10/2007	Reckamp et al.
2007/0294335	A1	12/2007	Gershom
2008/0037444	A1	2/2008	Chhabra
2008/0066093	A1	3/2008	Igoe et al.
2008/0089300	A1	4/2008	Yee
2008/0122606	A1	5/2008	Bradley
2008/0168523	A1	7/2008	Ansari et al.
2008/0219672	A1	9/2008	Tam et al.
2008/0277486	A1	11/2008	Seem et al.
2008/0278100	A1	11/2008	Hwang
2009/0033485	A1	2/2009	Naeve et al.
2009/0070681	A1	3/2009	Dawes et al.
2009/0080896	A1	3/2009	Pereira et al.
2009/0244097	A1	10/2009	Estevez
2010/0068997	A1	3/2010	Dunko
2010/0083356	A1	4/2010	Steckley et al.
2010/0130166	A1	5/2010	Tsuria et al.
2010/0138007	A1	6/2010	Clark et al.
2010/0141153	A1	6/2010	Recker et al.
2010/0150348	A1	6/2010	Fairbanks et al.
2010/0189096	A1	7/2010	Flynn
2010/0192212	A1	7/2010	Raleigh
2010/0246825	A1	9/2010	Baras et al.
2010/0248707	A1	9/2010	Hoffner et al.
2010/0283579	A1	11/2010	Kraus et al.
2010/0283584	A1	11/2010	McAllister
2011/0046798	A1	2/2011	Imes et al.
2011/0107364	A1	5/2011	Lajoie et al.
2011/0121654	A1	5/2011	Recker et al.
2011/0172844	A1	7/2011	Choong et al.
2011/0199004	A1	8/2011	Henig et al.
2011/0202151	A1	8/2011	Covaro et al.
2011/0225373	A1	9/2011	Ito et al.
2011/0299412	A1	12/2011	Diab
2011/0302634	A1	12/2011	Karaoguz
2012/0011567	A1	1/2012	Cronk et al.
2012/0045060	A1	2/2012	Maestrini et al.
2012/0049765	A1	3/2012	Lu et al.
2012/0082062	A1	4/2012	McCormack
2012/0144469	A1	6/2012	Ainslie et al.
2012/0167063	A1	6/2012	Detwiler et al.
2012/0204243	A1	8/2012	Wynn et al.
2012/0216296	A1	8/2012	Kidron
2012/0239936	A1	9/2012	Holtmanns et al.
2013/0026947	A1	1/2013	Economy et al.
2013/0041516	A1	2/2013	Rockenfeller et al.
2013/0064132	A1	3/2013	Low et al.
2013/0073705	A1	3/2013	Hester
2013/0076491	A1	3/2013	Brandsma et al.
2013/0086665	A1	4/2013	Filippi et al.
2013/0124855	A1	5/2013	Varadarajan et al.

(56) **References Cited**

U.S. PATENT DOCUMENTS

2013/0132008	A1	5/2013	Borean
2013/0191755	A1	7/2013	Balog et al.
2013/0198786	A1	8/2013	Cook et al.
2013/0223279	A1*	8/2013	Tinnakornsrisuphap H04W 12/04 370/254
2013/0227656	A1	8/2013	Holtmanns et al.
2013/0236183	A1	9/2013	Chao et al.
2013/0268357	A1	10/2013	Heath
2013/0276140	A1	10/2013	Coffing et al.
2013/0340050	A1	12/2013	Harrison
2014/0007222	A1	1/2014	Qureshi et al.
2014/0068705	A1	3/2014	Chambers et al.
2014/0068789	A1	3/2014	Watts et al.
2014/0099933	A1	4/2014	Yerrabommanahalli et al.
2014/0129006	A1	5/2014	Chen et al.
2014/0137188	A1	5/2014	Bartholomay et al.
2014/0157370	A1	6/2014	Plattner et al.
2014/0164758	A1	6/2014	Ramamurthy
2014/0164776	A1	6/2014	Hook et al.
2014/0173692	A1	6/2014	Srinivasan et al.
2014/0189359	A1	7/2014	Marien et al.
2014/0189808	A1	7/2014	Mahaffey et al.
2014/0245411	A1	8/2014	Meng et al.
2014/0245461	A1	8/2014	O'Neill et al.
2014/0248852	A1	9/2014	Raleigh et al.
2014/0266600	A1	9/2014	Alberth, Jr. et al.
2014/0270801	A1	9/2014	Sleator
2014/0273963	A1	9/2014	Su et al.
2014/0281497	A1	9/2014	Medvinsky et al.
2014/0282570	A1	9/2014	Prasanna
2014/0282877	A1	9/2014	Mahaffey et al.
2014/0310509	A1	10/2014	Potlapally et al.
2014/0310510	A1	10/2014	Potlapally et al.
2015/0015369	A1	1/2015	Lamb
2015/0043377	A1	2/2015	Cholas et al.
2015/0070585	A1	3/2015	Sharif-Ahmadi
2015/0071052	A1	3/2015	Hershberg et al.
2015/0126153	A1	5/2015	Spitz et al.
2015/0160634	A1	6/2015	Smith et al.
2015/0177292	A1	6/2015	Silveira Filho et al.
2015/0195100	A1	7/2015	Imes et al.
2015/0215297	A1	7/2015	Rathod et al.
2015/0220993	A1	8/2015	Bente
2015/0249855	A1	9/2015	Dewa et al.
2015/0282216	A1	10/2015	Reshef et al.
2016/0044032	A1	2/2016	Kim et al.
2016/0089457	A1	3/2016	Liao et al.
2016/0091217	A1	3/2016	Verberkt
2016/0132031	A1	5/2016	Kozura et al.
2016/0142263	A1	5/2016	Erdmann et al.
2016/0191264	A1	6/2016	Kim et al.
2016/0248629	A1	8/2016	Erdmann
2016/0370208	A1	12/2016	Patel et al.
2016/0380945	A1	12/2016	Wood et al.
2016/0381500	A1	12/2016	Larson
2017/0223808	A1	8/2017	Barna
2017/0285893	A1	10/2017	Shim et al.
2018/0077778	A1	3/2018	Vangeel

OTHER PUBLICATIONS

Detailed Technical Specification of Security for Heterogeneous Access, May 31, 2002, 161 pgs, www.isrc.rhul.ac.uk/shaman/docs/d09v1.pdf.

Google Inc., International Search Report and Written Opinion, PCT/US2015/053291, dated Feb. 5, 2016, 18 pgs.

Google Inc., International Search Report and Written Opinion, PCT/US2015/060405, dated Feb. 25, 2016, 9 pgs.

Goadrich, Mark H., and Michael P. Rogers. "Smart smartphone development: iOS versus Android." In Proceedings of the 42nd ACM technical symposium on Computer science education, pp. 607-612. ACM, 2011.

Manashty, Ali Reza, Amir Rajabzadeh, and Zahra Forootan Jahromi. "A Scenario-Based Mobile Application for Robot-Assisted Smart Digital Homes." arXiv preprint arXiv:1009.5398 (2010).

Armac, Ibrahim, and Daniel Retkowitz. "Simulation of smart environments." In IEEE International Conference on Pervasive Services, pp. 257-266. IEEE, 2007.

Ramlee, Ridza Azri, Man Hong Leong, Ranjit Singh A. Sarban Singh, Mohd Muzafar Ismail, Mohd Azlishah Othman, Hamzah Asyrani Sulaiman, Mohamad Harris Misran, Meor Said, and Maizatul Alice. "Bluetooth remote home automation system using android application." (2013): 1-5.

Van Nguyen, Tarn, Jin Gook Kim, and Deokjai Choi. "ISS: the interactive smart home simulator." In Advanced Communication Technology, 2009. ICACT 2009. 11th International Conference on, vol. 3, pp. 1828-1833. IEEE, 2009.

Rajabzadeh, Amir, Ali Reza Manashty, and Zahra Forootan Jahromi. "A Mobile Application for Smart House Remote Control System." arXiv preprint arXiv:1009.5557 (2010).

Gavalas, Damianos, and Daphne Economou. "Development platforms for mobile applications: Status and trends." IEEE software 28, No. 1 (2011): 77-86.

Y. Zatout, "Using wireless technologies for healthcare monitoring at home: A survey," 2012 IEEE 14th International Conference on e-Health Networking, Applications and Services (Healthcom), Beijing, 2012, pp. 383-386. URL: http://ieeexplore.ieee.org/stamp/stamp.jsp?tp=&arnumber=6379443&isnumber=6379371.

"INSTEON Compared" www.insteon.com/pdf/insteoncompared.pdf version.2 2013.

"Thread Group Information Event" https://www.threadgroup.org/Portals/O/documents/events/ThreadIntro.pdf; Sep 30, 2014.

Google Inc., International Preliminary Report on Patentability, PCT/US2015/060405, dated May 16, 2017, 7 pgs.

Google Inc., International Preliminary Report on Patentability, PCT/US2015/053291, dated Apr. 4, 2017, 14 pgs.

* cited by examiner

FIG. 1 (Prior Art)

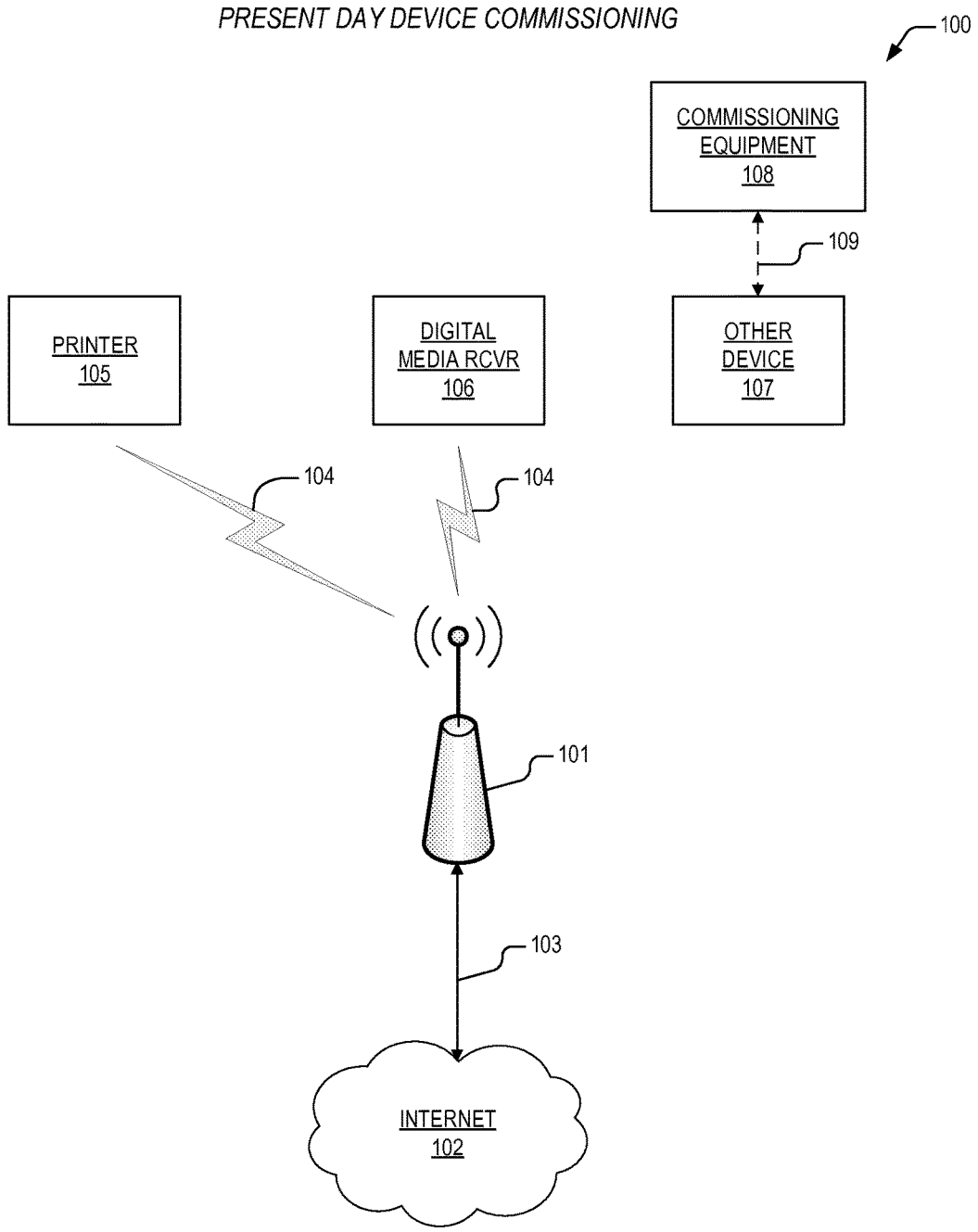

FIG. 2 (Prior Art)

PRESENT DAY DEVICE COMMISSIONING MECHANISMS

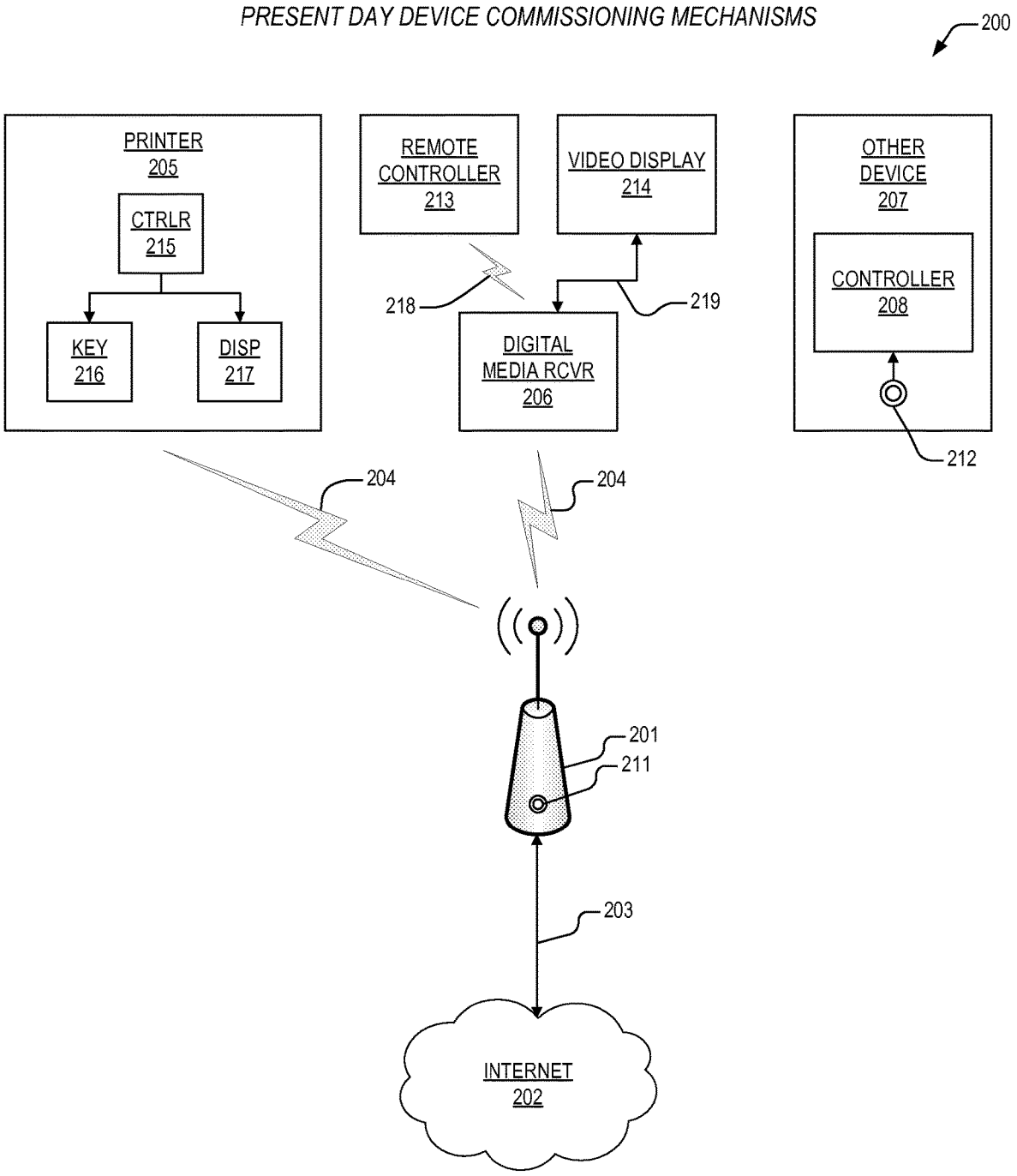

FIG. 3

EXEMPLARY SEAMLESS DEVICE COMMISSIONING TECHNIQUE

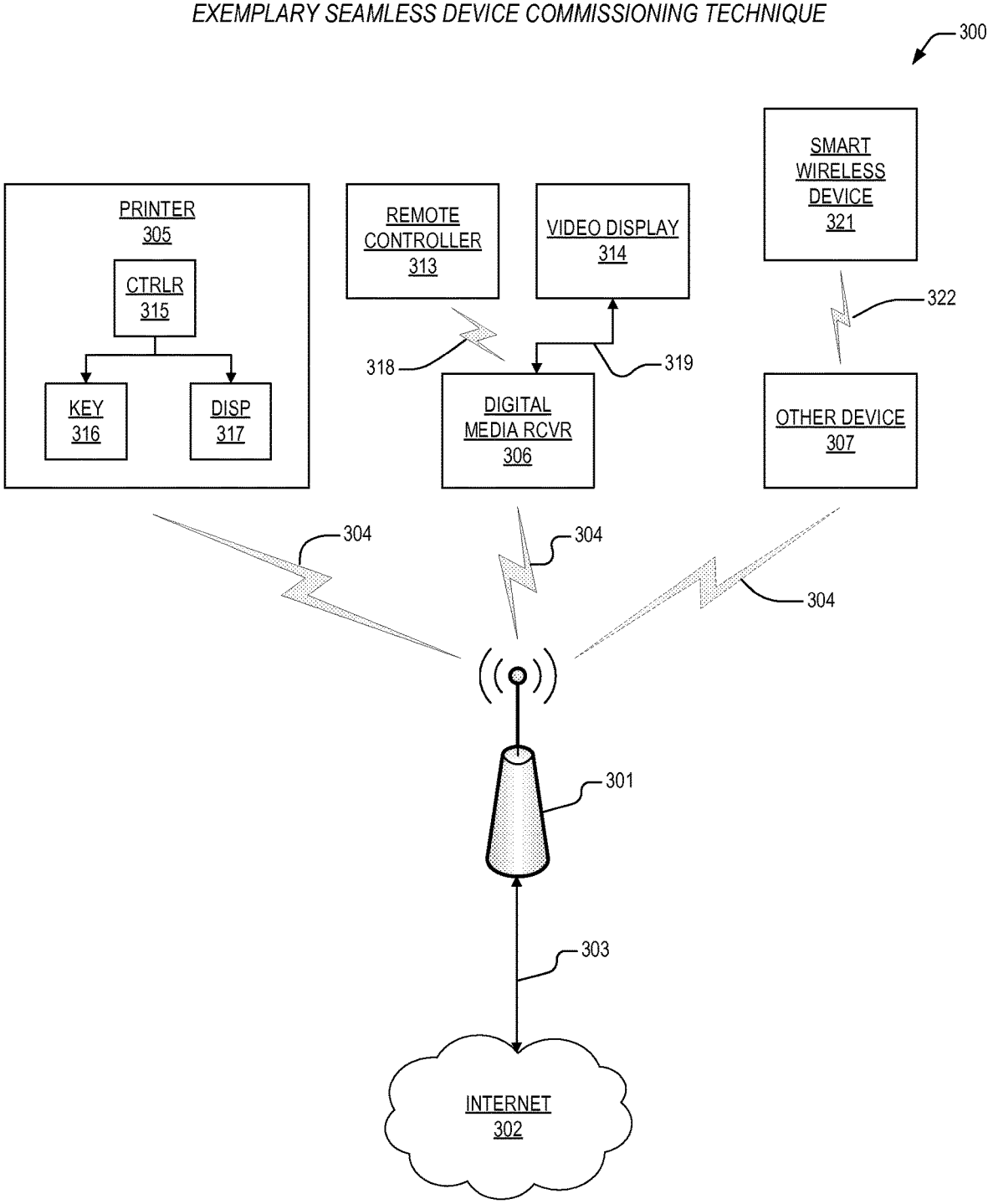

FIG. 4

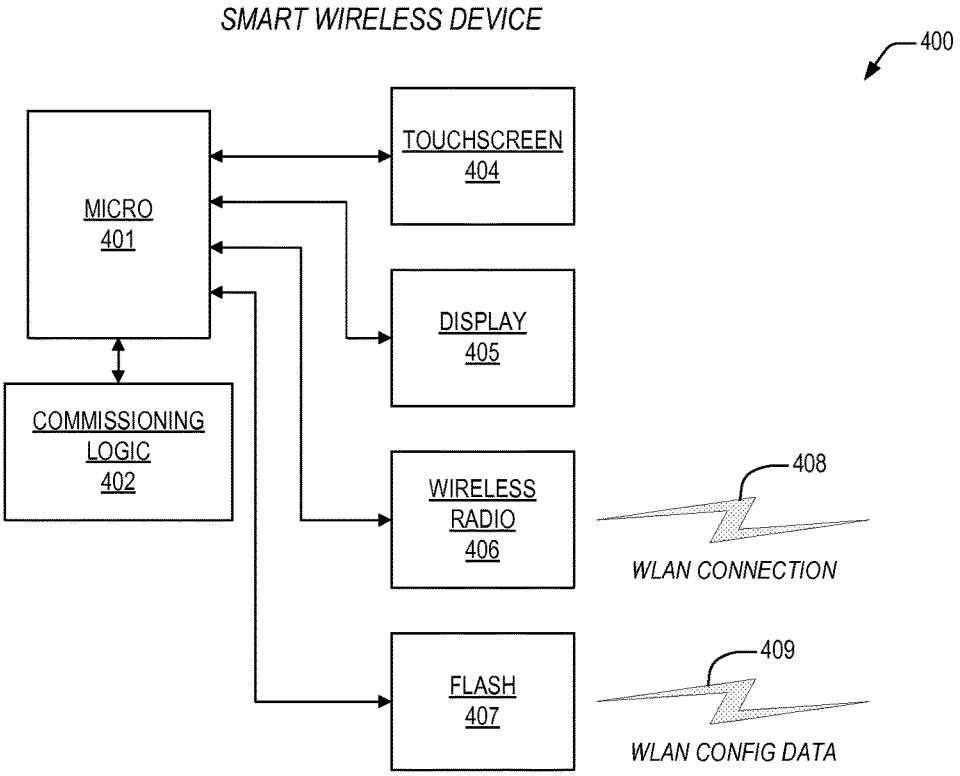
SMART WIRELESS DEVICE
400
MICRO
401
TOUCHSCREEN
404
DISPLAY
405
COMMISSIONING
LOGIC
402
WIRELESS
RADIO
406
408
WLAN CONNECTION
FLASH
407
409
WLAN CONFIG DATA

FIG. 5

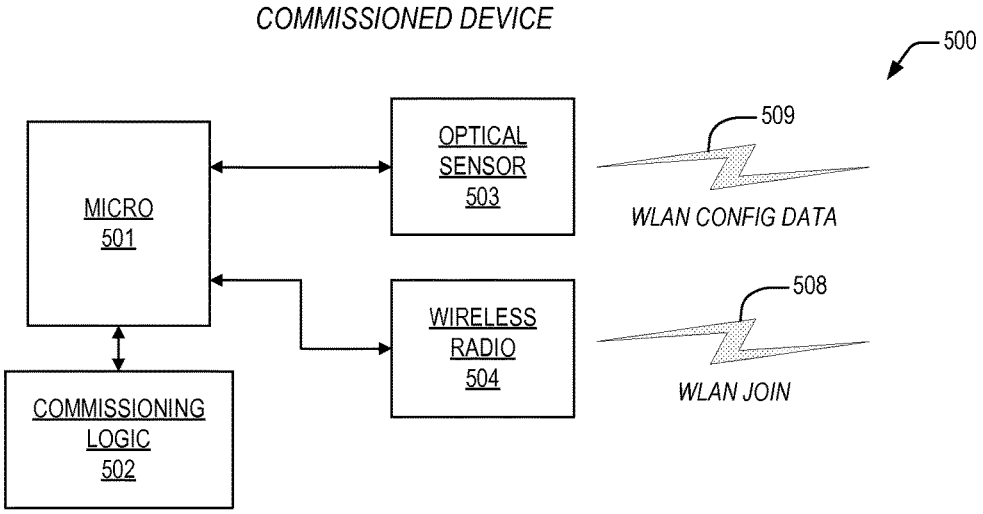
COMMISSIONED DEVICE
500
MICRO
501
OPTICAL
SENSOR
503
509
WLAN CONFIG DATA
WIRELESS
RADIO
504
508
WLAN JOIN
COMMISSIONING
LOGIC
502

FIG. 6

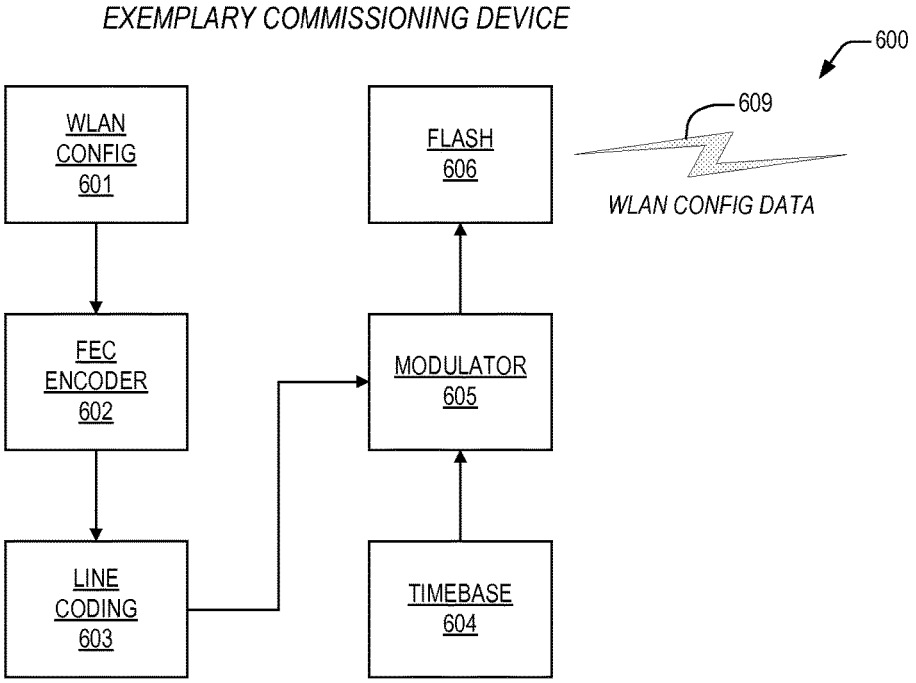
EXEMPLARY COMMISSIONING DEVICE
600
WLAN CONFIG 601
FLASH 606
609
WLAN CONFIG DATA
FEC ENCODER 602
MODULATOR 605
LINE CODING 603
TIMEBASE 604

FIG. 7

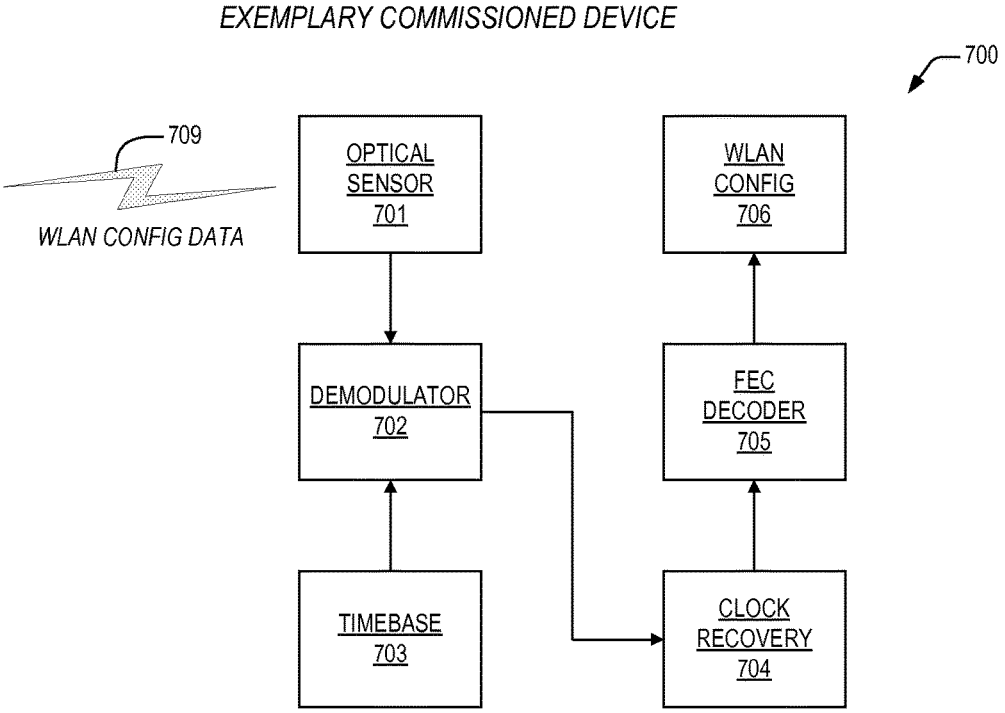
EXEMPLARY COMMISSIONED DEVICE
700
709
WLAN CONFIG DATA
OPTICAL SENSOR 701
WLAN CONFIG 706
DEMODULATOR 702
FEC DECODER 705
TIMEBASE 703
CLOCK RECOVERY 704

FIG. 8

EXEMPLARY COMMISSIONED DEVICE

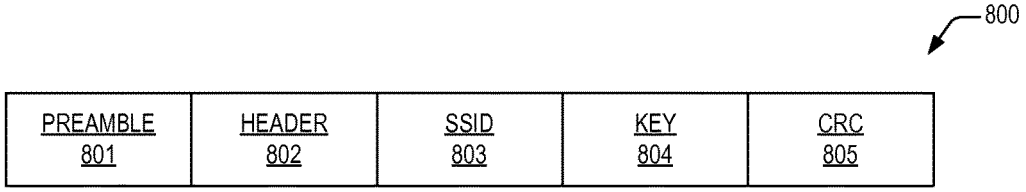

APPARATUS AND METHOD FOR SEAMLESS COMMISSIONING OF WIRELESS DEVICES

CROSS-REFERENCE TO RELATED APPLICATIONS

This application is a continuation of and claims priority to U.S. Utility patent application Ser. No. 15/960,337, filed Apr. 23, 2018, titled "Apparatus and Method for Seamless Commissioning of Wireless Devices," which is a continuation of and claims priority to U.S. Utility patent application Ser. No. 15/452,654, filed Mar. 7, 2017, issued as U.S. Pat. No. 9,998,325 on Jun. 12, 2018, titled "Apparatus and Method for Seamless Commissioning of Wireless Devices," which is a continuation of and claims priority to U.S. Utility patent application Ser. No. 15/159,735, filed May 19, 2016, issued as U.S. Pat. No. 9,591,690 on Mar. 7, 2017, titled "Apparatus and Method for Seamless Commissioning of Wireless Devices," which is a continuation of and claims priority to U.S. Utility patent application Ser. No. 14/927,406, filed Oct. 29, 2015, issued as U.S. Pat. No. 9,485,790 on Nov. 1, 2016, titled "Apparatus and Method for Seamless Commissioning of Wireless Devices," which is a continuation of and claims priority to U.S. Utility patent application Ser. No. 13/839,828, filed Mar. 15, 2013, issued as U.S. Pat. No. 9,198,204 on Nov. 24, 2015, titled "Apparatus and Method for Seamless Commissioning of Wireless Devices," which claims priority to and the benefit of U.S. Provisional Application No. 61/622,620, filed on Apr. 11, 2012, titled "Apparatus and Method for Seamless Commissioning of Wireless Devices." The content of each of the above applications is herein incorporated by reference in its entirety.

TECHNICAL FIELD

This invention relates in general to the field of electronic device commissioning, and more particularly to an apparatus and method for seamless commissioning of electronic devices onto wireless local area networks (WLANs).

BACKGROUND

It is almost incredible to realize the number of electronic devices that exist today, and even more so when one considers the exponentially increasing number of those devices that are configured for wireless network integration. On the business front, laptop computers, smart phones, and tablet computers abound. On the personal front, home automation is crossing thresholds which have heretofore been untouched. Today's average consumer has access to the Internet via a high speed connection and most probably has a wireless network in their home. Attached to that wireless network are home computers, digital readers, wireless printers, and some form of wireless entertainment equipment, such as streaming media players and the like.

On top of this, everyday appliances such as door locks, thermostats, garage door openers, outlets, and light switches are now being configured for wireless operation. Both businesses and homes frequently are equipped with alarm systems that function wirelessly. The list continues to grow.

But as one skilled in the art will appreciate, wireless electronic devices do not merely connect themselves to the nearest wireless network. Rather, they must be "commissioned" onto a desired network. That is, the particular devices must be provided with configuration data to enable them to join the desired wireless network so that they can

function according to specification by utilizing the communication properties of the network.

Yet, at this point in time, virtually every electronic device is different in the manner in which they are commissioned onto a wireless network. Some devices require a sequence of switch actuations that are coordinated with similar actuations on a controller device. Other devices have rudimentary keypads whereby a user enters the configuration information, often in cryptic and unintelligible form. Still other devices have keypads and displays that allow for data entry that is somewhat more user friendly. Yet more devices utilize other coupled devices (e.g., televisions and special remote controls) to enter network names and passwords. And as a result, the average user of these wireless devices must either be very smart, or they require assistance from someone who is knowledgeable.

Accordingly, what is needed is a technique for commissioning a wireless device onto a wireless network that the average consumer can employ without undue distress.

In addition, what is needed is a mechanism for commissioning wireless devices that utilizes common, user friendly steps and equipment.

SUMMARY

The present invention, among other applications, is directed to solving the above-noted problems and addresses other problems, disadvantages, and limitations of the prior art. The present invention provides a superior technique for commissioning one or more electronic devices onto an existing wireless local area network. In one embodiment an apparatus is provided for commissioning a target device onto a wireless local area network (WLAN). The apparatus includes a smart wireless device. The smart wireless device has commissioning logic and a transducer. The commissioning logic is configured to format and direct transmission of one or more WLAN configuration packets that convey WLAN configuration data. The transducer is coupled to the commissioning logic, and is configured to transmit the one or more WLAN configuration packets over the transmission path to the target device, wherein the transducer is an existing component of the smart wireless device.

One aspect of the present invention contemplates an apparatus for wireless local area network (WLAN) device commissioning. The apparatus has a smart wireless device and a target device. The smart wireless device includes first commissioning logic and a first transducer. The first commissioning logic is configured to format and direct transmission of one or more WLAN configuration packets. The first transducer is coupled to the first commissioning logic, and is configured to transmit the one or more WLAN configuration packets over the transmission path, where the first transducer is an existing component of the smart wireless device. The target device includes a second transducer, second commissioning logic, and a wireless radio. The second transducer is configured to receive the one or more WLAN configuration packets. The second commissioning logic is coupled to the second transducer, and is configured to decode and process the one or more WLAN configuration packets to recover WLAN configuration data. The wireless radio is operatively coupled to the commissioning logic, and is configured to employ the WLAN configuration data to enable the target device to join a WLAN.

Another aspect of the present invention comprehends a method for wireless local area network (WLAN) device commissioning. The method includes: executing a first

application on a smart wireless device to format and direct transmission of one or more WLAN packets; via a first transducer of the smart wireless device, transmitting the one or more WLAN configuration packets over a transmission path, where the first transducer is an existing component of the smart wireless device; via a second transducer disposed within a target device, receiving the one or more WLAN configuration packets; executing a second application on the target device to decode and process the one or more WLAN configuration packets to recover WLAN configuration data; and via a wireless radio disposed within the target device, employing the WLAN configuration data to enable the target device to join a WLAN.

BRIEF DESCRIPTION OF THE DRAWINGS

These and other objects, features, and advantages of the present invention will become better understood with regard to the following description, and accompanying drawings where:

FIG. **1** is a block diagram illustrating a present day device commissioning technique;

FIG. **2** is a block diagram depicting present day commissioning mechanisms such as might be employed in the technique of FIG. **1**;

FIG. **3** is a block diagram featuring an exemplary seamless device commissioning technique according to the present invention;

FIG. **4** is a block diagram showing a smart wireless commissioning device according to the present invention;

FIG. **5** is a block diagram illustrating a commissioned device according to the present invention;

FIG. **6** is a block diagram detailing features of an exemplary commissioning device according to the present invention;

FIG. **7** is a block diagram showing details of an exemplary commissioned device according to the present invention; and

FIG. **8** is a block diagram illustrating an exemplary commissioning packet according to the present invention.

DETAILED DESCRIPTION

Exemplary and illustrative embodiments of the invention are described below. In the interest of clarity, not all features of an actual implementation are described in this specification, for those skilled in the art will appreciate that in the development of any such actual embodiment, numerous implementation specific decisions are made to achieve specific goals, such as compliance with system-related and business related constraints, which vary from one implementation to another. Furthermore, it will be appreciated that such a development effort might be complex and time-consuming, but would nevertheless be a routine undertaking for those of ordinary skill in the art having the benefit of this disclosure. Various modifications to the preferred embodiment will be apparent to those skilled in the art, and the general principles defined herein may be applied to other embodiments. Therefore, the present invention is not intended to be limited to the particular embodiments shown and described herein, but is to be accorded the widest scope consistent with the principles and novel features herein disclosed.

The present invention will now be described with reference to the attached figures. Various structures, systems, and devices are schematically depicted in the drawings for purposes of explanation only and so as to not obscure the present invention with details that are well known to those skilled in the art. Nevertheless, the attached drawings are included to describe and explain illustrative examples of the present invention. The words and phrases used herein should be understood and interpreted to have a meaning consistent with the understanding of those words and phrases by those skilled in the relevant art. No special definition of a term or phrase (i.e., a definition that is different from the ordinary and customary meaning as understood by those skilled in the art) is intended to be implied by consistent usage of the term or phrase herein. To the extent that a term or phrase is intended to have a special meaning (i.e., a meaning other than that understood by skilled artisans) such a special definition will be expressly set forth in the specification in a definitional manner that directly and unequivocally provides the special definition for the term or phrase.

In view of the above background discussion on device commissioning and associated techniques employed within present day systems for commissioning a wireless device into a wireless network, a discussion of the limitations of these present day mechanisms will now be discussed with reference to FIGS. **1-2**. Following this, a discussion of the present invention will be presented with reference to FIGS. **3-8**. The present invention overcomes limitations of present day device commissioning techniques by providing apparatus and methods that enable devices to be commissioned into a wireless network without requiring special purpose commissioning hardware, administrative access to network equipment, the creation of ad hoc networks, or compromises to operational security.

Turning to FIG. **1**, a block diagram **100** is presented illustrating a present day device commissioning technique. The diagram **100** depicts a wireless local area network (WLAN) access point **101** that controls access to and communications over a WLAN **104**. As one skilled in the art will appreciate, the access point **101** may also be referred to as a Wi-Fi access point **101**, a Wi-Fi router **101**, a Wi-Fi gateway **101**, a Wi-Fi hub **101**, and the like which refer to a controller **101** that allows electronic devices **105-107** to exchange data wirelessly over a wireless network **104**. Often, the network **104** utilizes protocols based on the Institute of Electrical and Electronics Engineers' (IEEE) 802.11 standards, however, such references are not intended to limit protocols of the network **104** to 802.11, but rather reference is made to the well known 802.11 standards in order to teach aspects of the present invention.

The WLAN access point **101** is coupled via bus **103** to the Internet in any of number of well known ways to include digital subscriber line (DSL), cable, and wireless radio link. As such, the access point **101** enables the devices **105-107** to communicate with each other, and also to other devices (not shown) over the Internet **102**.

The diagram **100** shows a printer **105** and a digital media receiver **106** (e.g., APPLETV®, ROKU®, DIRECTV®) that are coupled to the access point **101** via the WLAN **104**. The diagram additionally shows an other device **107** that is not yet coupled to the access point **101** via the WLAN **104**, and which requires commissioning into the WLAN **104**. As one skilled in the art will appreciate, the other device **107** may comprise, but is not limited to a personal computer, a video game console, a smartphone, a tablet computer, an alarm console, a streaming media player, network attached storage, and any number of other Wi-Fi enabled appliances (e.g., outlets, lights, locks, sensors, etc.). Although reference is made to "Wi-Fi enabled appliances," the present inventors noted that applications of the present invention extend beyond commonly construed "Wi-Fi" protocols (i.e., IEEE

802.11 protocols) to comprehend any wireless protocol, as will be discussed in further detail below. For purposes of the present disclosure, "commissioning" is construed to mean configuration of the other device **107** and the system **100** as a whole such that the other device **107** is enabled to function properly over the WLAN **104** including, if required, access to the Internet **102**.

As one skilled in the art will appreciate, there are a number of varying techniques that may be employed to commission present day devices onto a WLAN **104**. Some of these techniques require operator intervention, some require the use of special purpose commissioning equipment **108**, and some require the creation of temporary (or ad hoc) wireless networks **109**. And the present inventors have noted that as wireless device usage proliferates in the office and the home, this cornucopia of commissioning techniques poses challenges to those in the art, because each individual technique is limited with regard to one system attribute or another. A more detailed discussion of the limitations associated with present day commissioning techniques will now be presented with reference to FIG. **2**.

FIG. **2** is a block diagram **200** depicting present day commissioning mechanisms such as might be employed in the technique of FIG. **1**. The diagram **200** depicts a WLAN access point **201** that is coupled to the Internet **202** via a bus **203**, and which controls access to a wireless LAN **204**. Operationally, the access point **201** functions substantially like the access point **101** of FIG. **1**. A printer **205** is coupled to the access point **201** via the WLAN **204**. The printer **205** has a controller **215** that is coupled to a keyboard **216** and display **217**. The diagram **200** also shows a digital media receiver **206** that is coupled to the access point **201** via the WLAN **204**. The receiver **206** is also coupled to a remote controller **213** via a radio wave bus **218**, and to a video display **214** (e.g., a television) via bus **219**. The diagram **200** additionally depicts an other device **207** that requires commissioning onto the WLAN **204**. The other device **207** includes a controller **208** that is coupled to a pushbutton switch **212**.

The particular elements shown in FIG. **2** are well known to those in the art and are selected to illustrate limitations associated with some of the most prevalently employed present day commissioning techniques. For example, one well known commissioning technique utilizes coordinated activation of pushbutton switches to initiate the exchange of configuration data so that, say, the other device **207** can join the WLAN **204**. Accordingly, a commissioning pushbutton switch **211** is shown on the access point **201**, which functions in this scenario as a system controller for the other device **207**. Thus, a technician is required to perform a time synchronized actuation of the pushbutton switches **211**, **212** on both the access point and the other device **207** and by doing so, the access point **201** begins transmission of packets that include configuration data, thus enabling the other device **207** to subsequently join the WLAN **204**. Transmission of this configuration data is typically accomplished utilizing the same radio transceivers (not shown) as are required for interoperability over the WLAN **204** itself. But the present inventors have observed that this "pushbutton" commissioning technique is disadvantageous because physical and/or administrative access to the access point **201** is required in order to accomplish commissioning of the other device **207**, and in office and other scenarios where security concerns are paramount, such access may not be easily obtained.

Another well known present day commissioning technique provides for the direct entry of device configuration data utilizing integral or directly coupled controls and displays. For instance, consider a scenario under which an operator may commission the printer **205** onto the WLAN **204** by performing a series of data entry steps via the keypad **216** and display **217**. The operator may select from a menu of WLAN types and then the printer **205** will monitor for available networks of that type, thus allowing the operator to select from a menu of available networks. The operator may then be required to enter secure access information (e.g., passwords, etc.) to enable the printer to join the WLAN.

Or consider a more intelligent commissioning technique where, say, the digital media receiver **206** possesses the capabilities to determine the appropriate WLAN **204** to join, and all that is needed is for the operator to enter a personal identification number (PIN) via the remote controller **213** and verify configuration setup via the video display **214**.

The above commissioning techniques may be categorized in general as Wi-Fi protected setup techniques, and are well known to those in the art. Other techniques also include the use of near-field communications and the use of a direct connection such as Universal Serial Bus (USB). In more extreme cases, a device to be commissioned (e.g., the other device **207**), may create a temporary network and require the operator to configure a computing device (not shown) to join the temporary network. Then, the computing device is subsequently used to issue commands and configuration data to the devices, thus allowing it to join the intended WLAN **204**.

Alternatively, the device to be commissioned may be required to monitor for specially formatted probes or beacon request messages in order to decode network configuration data therefrom. Such a scenario could be employed utilizing the pushbutton method discussed above.

The present inventors note that, as one skilled in the art will appreciate, virtually all of the above noted commissioning techniques require physical and/or administrative access to either the access point **201** or to special commissioning equipment which, as is alluded to above, may not be easily obtained. It is also noted that commissioning techniques that involve the use of PINS and/or the direct entry of configuration data present the opportunity for tampering and or breech of security through the compromise of trusted data. It is furthermore noted that the creation of near-field communications and ad hoc networks requires dedicated equipment for such purposes. And moreover, all of the techniques discussed above present challenges to those other than a skilled technician. A typical operator may not be skilled in the entry of network configuration data or configuration of special commissioning equipment. In addition, for those techniques that temporarily open a network in order to commission as device, such an action is both observable and sniffable, thus providing a pathway for exploitation of the compromised parameter that allow unauthorized users and devices to join the network at a later time. Consequently, the wide range of complex commissioning techniques are challenging those in the art to develop more user-friendly, secure, and effective mechanisms for device commissioning than have heretofore been provided. More specifically, with the exponential increase in the deployment of wireless devices in the marketplace, those in the art are motivated to provide commissioning techniques that a typical user can perform without problems.

The present invention overcomes the above noted limitations, and others, by providing an apparatus and method for seamless device commissioning which, in one embodiment, leverages the ubiquitous nature and use of so-called

"smart" wireless devices in the home and office. The present invention will now be discussed with reference to FIGS. **3-8**.

Turning to FIG. **3**, a block diagram **300** is presented featuring an exemplary seamless device commissioning technique according to the present invention. The diagram. The diagram **300** depicts a wireless local area network (WLAN) access point **301** that controls access to and communications over a WLAN **304**. Like the access point **101** of FIG. **1**, the access point **301** according to the present invention allows electronic devices **305-307** to exchange data wirelessly over the wireless network **304** once the devices **305-307** are commissioned onto the WLAN **304**. In one embodiment, the network **304** utilizes protocols based on the Institute of Electrical and Electronics Engineers' (IEEE) 802.11 standards, however, such references are not intended to limit protocols of the network **304** to 802.11, but rather reference is made to the well known 802.11 standards in order to teach aspects of the present invention.

The WLAN access point **301** is coupled via bus **303** to the Internet in any of a number of well-known ways to include digital subscriber line (DSL), cable, and wireless radio link. As such, the access point **301** enables the devices **305-307** to communicate with each other, and also to other devices (not shown) over the Internet **302**.

The diagram **300** shows a printer **305** and a digital media receiver **306** (e.g., APPLETV®, ROKU®, DIRECTV®) that are coupled to the access point **301** via the WLAN **304**. The diagram additionally shows another device **307** that is not yet coupled to the access point **301** via the WLAN **304**, and which requires commissioning into the WLAN **104**. As one skilled in the art will appreciate, the other device **307** may comprise, but is not limited to a personal computer, a video game console, a smartphone, a tablet computer, an alarm console, a streaming media player, network attached storage, and any number of other Wi-Fi enabled appliances (e.g., outlets, lights, locks, sensors, etc.).

Like the printer **205** of FIG. **2**, the printer **305** of FIG. **3** includes a controller **315** that is coupled to a keyboard **316** and a display **317**, which are employed according to one of the present day methods described above to commission the printer **305** onto the WLAN **304**. And like the receiver **206** of FIG. **2**, the receiver **306** of FIG. **3** is coupled to a remote controller **313** via bus **318** and a video display **314** via bus **319**, which are employed according to one of the present day methods described above to commission the receiver **306** onto the WLAN **304**.

However, in contrast to present day commissioning techniques, the technique according to the present invention utilizes a smart wireless device **321** to commission the other device **307** according to the present invention onto the WLAN **304** by utilizing existing mechanisms (i.e., transmitting elements (not shown)) on the smart wireless device **321** to transmit configuration information over a transmission path **322** to the other device **307**, thus enabling the other device **307** to join the WLAN. The other device **307** is configured to include receiving elements (not shown) that correspond to the transmitting elements and transmission path **322**, thus enabling the other device **307** to receive and process the configuration information. It is a feature of the present invention to employ a smart wireless device **321** and to utilize existing elements within the smart wireless device **321** to transmit the configuration information to the other device such as an internal microcomputer, memory, a camera flash, backlit display, touchscreen or keyboard, and the like. Advantageously then, commissioning can be affected without a requirement for special commissioning equipment or special user skills.

In one embodiment, the smart wireless device **321** comprises a smart cellular telephone such as, but not limited to, an IPHONE® or ANDROID® phone. In another embodiment, the smart wireless device **321** comprises a tablet computer such as, but not limited to, an IPAD® or an ANDROID® tablet. Other embodiments of the smart wireless device **321** are contemplated which are capable of providing the functions and mechanisms discussed below.

In one embodiment, the smart wireless device **321** utilizes a side band, proximity based, communication channel **322** that is established between the smart wireless device **321** and the other device **307** to be commissioned onto the WLAN **304**. The transmitting and receiving elements perform the functions and operations as discussed above. The transmitting and receiving elements comprise logic, circuits, devices, or program instructions executed by a microprocessor or other processing unit, or a combination of logic, circuits, devices, or program instructions executing on a microprocessor of other processing unit, or equivalent elements that are employed to execute the functions and operations according to the present invention as disclosed herein. The elements employed to accomplish these operations and functions within the transmitting and receiving elements may be shared with other circuits, program instructions, etc., that are employed to perform other functions and/or operations within the transmitting and receiving elements. In one embodiment, the smart device **321** constructs a commissioning message that includes WLAN configuration data. The message is transmitted by the smart device **321** to the other device **307** via the transmitting elements and the message is received by the other device **307** via the receiving elements. In one embodiment, the WLAN configuration data comprises the name of the WLAN, security mode, and any required security passphrase. Other embodiments contemplate additional or different configuration data as is appropriate for commissioning the other device **307**.

In operation, the other device **307** extracts the WLAN configuration data from the received configuration message and employs the configuration data in order to join the WLAN **304**.

In one embodiment, the transmitting elements comprise an existing camera flash and the receiving elements comprise an optical sensor. Another embodiment contemplates utilization of a display backlight that transmits optical signals to an optical sensor. A further embodiment comprehends the use of infrared transmission and receiving elements. Still another embodiment utilizes an acoustic speaker and microphone to transfer the configuration data via sound. Yet another embodiment utilizes BLUETOOTH® or substantially similar radio transmissions to transfer the configuration data. Further embodiments utilize near field communications (NFC) or mechanical vibration/accelerometer transmission.

Alternative embodiments of the transmitting elements may use disparate radio frequencies such as, but not limited to, 433 Megahertz (MHz), 868 MHz, 900 MHz, 2.4 Gigahertz (GHz), or 5.2 GHz. These embodiments may use radio modulation techniques such as, but not limited to, frequency shift keying (FSK), phase shift keying (PSK), on-off keying (OOK), and quadrature amplitude modulation (QAM). These embodiments may use radio frequency (RF) communication standards such as, but not limited to, near field communication (NFC), RF identification (ID), BLUETOOTH LOW ENERGY®, Zigbee®, radio frequency for consumer electronics (RF4CE®), Z-Wave®, or other proprietary standards.

Referring now to FIG. **4**, a block diagram is presented showing a smart wireless commissioning device **400** according to the present invention. The smart device **400** is configured to format and transmit WLAN configuration data to a corresponding device to be commissioned according to the present invention by utilizing an optical transmission path. The smart device **400** comprises a microcomputer **401** (e.g., microprocessor, central processing unit, processor, microcontroller, and etc.) that is coupled to commissioning logic **402**. The microcomputer is also coupled to an existing touchscreen **404**, a display **405**, a wireless radio **406**, and a camera flash **407**. In one embodiment, the camera flash **407** is employed as a transmitter to convey configuration data to the device to be commissioned.

Operationally, the microcontroller **401** includes processing circuits that are employed to format and configure WLAN configuration packets which are optically transmitted by the camera flash **407** by modulating the flash **407** on and off to transmit the packets according to any well known communication protocol or via a proprietary protocol. The commissioning logic **402** includes program instructions that direct the microcontroller **401** to format and transmit the WLAN configuration packets to the device to be commissioned. In one embodiment, the commissioning logic **402** comprises an existing memory element (e.g., random access memory (RAM), read-only memory (ROM), electrically programmable ROM (EPROM), flash memory) within the device **400**. In this embodiment, the commissioning logic **402** may be external to the microcontroller **401** or internal to the microcontroller **401**. An alternative embodiment comprehends stand-alone commissioning logic **402** (e.g., circuits and/or program instructions) that operates to transmit the commissioning packets independent from operation of other device functions provided for by the microcontroller **401**.

The touchscreen **404** and display **405** are employed to initiate execution of the program instructions by the microcontroller via, in one embodiment, launching a commissioning application on the smart wireless device **400**. Additionally, the display **405** may be employed to provide status and/or commissioned device information. The WLAN configuration data is optically transmitted by the flash **407** over an optical transmission patch **409** to the device to be commissioned. The wireless radio **406** may be employed via a WLAN **408** to communicate with a WLAN access point (not shown) or to the commissioned device following commissioning.

In lieu of using the camera flash **407**, an alternative embodiment of the smartphone commissioning device **400** employs a backlight function of the display **405** as the transmitter portion of the transmitting element, where the backlight is modulated on and off as described above. Other embodiments for optically transmitting the commissioning message are contemplated such as intensity modulation (e.g., brightness) and/or modulation of the color of the backlight.

Operationally, the remaining elements of the smart wireless device **400** work according to control provided by the commissioning logic **402** (or the commissioning logic **401** in conjunction with the microcontroller **401**) to cause the camera flash **407** to transmit the commissioning packets to the device to be commissioned, thereby allowing it to join the WLAN **408**. In one embodiment, after the commissioned device has joined the WLAN **408**, the wireless radio **406** is employed to optionally receive commissioning confirmation data from and/or to transmit supplemental configuration data to the commissioned device via the WLAN connection **408**.

As is appropriate for the chosen transmitting element and receiving element, a variety of well-known communication protocols, error correcting codes, line coding, and/or modulation techniques may be used to send the messages from the transmitter to the receiver in a reliable manner according to the present invention.

Now turning to FIG. **5**, a block diagram is presented illustrating a commissioned device **500** according to the present invention. The commissioned device **500** may be commissioned onto a WLAN by the smart wireless device **400** of FIG. **4**. The commissioned device **500** comprises a microcontroller **501** that is coupled to commissioning logic **502**. The microcontroller **501** is also coupled to an optical sensor **503** and to a wireless radio **504**. In the embodiment shown, the optical sensor **503** is employed as a transducer to receive WLAN configuration data from the wireless smart device **400** of FIG. **4** over an optical transmission link **509**.

Operationally, the microcontroller **501** includes processing circuits that are employed to decode and process WLAN configuration packets which are optically received by the optical sensor **503** over the transmission link **509**. The commissioning logic **502** includes program instructions that direct the microcontroller **501** to decode and process the WLAN configuration packets. In one embodiment, the commissioning logic **502** comprises an existing memory element within the device **500**. In this embodiment, the commissioning logic **502** may be external to the microcontroller **501** or internal to the microcontroller **501**. An alternative embodiment comprehends stand-alone commissioning logic **502** (e.g., circuits and/or program instructions) that operates to receive the commissioning packets independent from operation of other device functions provided for by the microcontroller **501**.

In one embodiment, after the commissioned device has joined the WLAN **508**, the wireless radio **506** is employed to optionally transmit commissioning confirmation data to and/or to receive supplemental configuration data from the smart wireless device and to communicate with the access point and other devices on the WLAN connection **508** as required.

Referring to FIG. **6**, a block diagram is presented detailing features of an exemplary commissioning device **600** according to the present invention, such as the smart wireless device **400** of FIG. **4**. The device **600** includes WLAN configuration data **601** that is provided to a forward error correction (FEC) encoder **602**. Encoded configuration data is generated by the encoder **602** and is provided to a line coding element **603**. One embodiment contemplates a Manchester encoder **603**. The line coding element **603** removes any direct current (DC) component from the configuration packets and allows transmission thereof to be self-clocking. Line coded configuration data is thus provided to a modulator **605**. The modulator **605** is also coupled to a timebase **604**. The modulator **605** combines the line coded data with timebase data to enables one or more corresponding optical messages to be serially transmitted. Modulated configuration data is thus provided by the modulator **605** to a flash **606**, which transmits the WLAN configuration packets over an optical transmission patch **609**. Elements **601-605** may be implemented by a combination of elements within the microcontroller **401** and commissioning logic **402** of FIG. **4**.

Now referring to FIG. **7**, a block diagram is presented showing details of an exemplary commissioned device **700** according to the present invention, such as the commissioned device **500** of FIG. **5**. The commissioned device **700** includes an optical sensor **701** that is employed as a transducer to receive WLAN configuration data packets which

are transmitted over an optical channel **709** by a commissioning device according to the present invention. The received bit stream is provided by the sensor **701** to a demodulator **702** that is also coupled to a timebase **703**. The demodulator **702** may employ accurate timebase data to sample the transmission at a higher rate than the original timebase **604** used by the modulator **605** of FIG. **6**. The output of the demodulator **702** is then sent to clock recovery **704**. The clock recovery utilizes the line coding added by the transmitter to discover the original timebase used by the modulator **605**. The clock recovery **704** then discards any extra samples and removes the line coding. The output of clock recovery **704** is then sent to an FEC decoder **705** which corrects any errors found in the transmission and recovers one or more commissioning messages. The commissioning messages provide the WLAN configuration data **706**, which is used by the product to join the WLAN. Elements **702-706** may be implemented by a combination of elements within the microcontroller **501** and commissioning logic **502** of FIG. **5**.

Referring now to FIG. **8**, a block diagram is presented illustrating an exemplary commissioning packet **800** according to the present invention. The packet **800** includes a preamble field **801**, a header field **802**, a service set identifier (SSID) field **803**, a key field **804**, and a cyclic redundancy check (CRC) field **805**. Operationally, the preamble **801** may be a 16-bit stream of repeating zeros and ones that allow a receiver according to the present invention to asynchronously synchronize with a transmitter according to the present invention. The header **802** may comprise two bytes, the first of which may be employed as a start frame delimiter and the second of which identifies a message type. The SSID **803** identifies the wireless network service set, and the key field **804** may comprise the network key. The CRC **805** is the result of a 16-bit CRC over the SSID **803** and key **804** fields using the polynomial X/\16+X/\2+X/\5+1.

Although the present invention and its objects, features, and advantages have been described in detail, other embodiments are encompassed by the invention as well. For example, some embodiments may require that the device to be commissioned be placed into a commissioning mode to receive the commissioning messages. Other embodiments may accept the commissioning messages concurrent with other operations of the commissioned device.

Some embodiments may transmit the WLAN configuration data in a single commissioning message, while other embodiments employ multiple commissioning messages to communicate the configuration data.

Some embodiments of the present invention may transmit other information in addition to WLAN configuration data. In one such embodiment, the commissioning device sends its own Internet protocol (IP) address, proxy, and gateway configuration to the device to be commissioned. Once the device to be commissioned has successfully joined the WLAN, then the device proceeds to contact the commissioning device via the WLAN to indicate success and to optionally communicate additional configuration data as is described above.

In some embodiments, the commissioned device provides a visual or audio indication to the user about the status of the commissioning process. In one embodiment, the commissioned device may illuminate an indicator (e.g., light emitting diode (LED)) to indicate progress, success, or failure of the commissioning. In another embodiment, the commissioned device may use a speaker to provide an audio indication of the commissioning status.

One embodiment of the present invention includes a configuration mode where the commissioned device communicates back to the smart wireless device via optical or audio transmission. The smart wireless device may observe this communication with existing hardware, such as a built-in camera for reception of the optical transmission, or a microphone for reception of the audio transmission. This type of communication may be used to alert the smart wireless device (and operator) of success or failure conditions.

In other embodiments, the commissioning device may be informed of the WLAN configuration data in a variety of ways. In one embodiment, it may derive the WLAN configuration data from its own active connection to the WLAN. In another embodiment, WLAN configuration data may be entered by the user directly into the commissioning device via the touchscreen and/or keyboard. Another embodiment contemplates automatic derivation of the WLAN configuration data by contact with a server or via some other record of the configuration data. Combinations of the above noted embodiments are also comprehended for determination of the configuration data by the commissioning device.

Further embodiments contemplate usage of desktop and laptop computers as commissioning devices, where their display screens, backlights, speakers, microphones, and the like are employed for visual communication of commissioning messages.

Advantageously, a commissioned device according to the present does not require its own user interface, but rather the commissioning device's existing display and/or touchscreen may be utilized to input commissioning data and to output commissioning results.

In addition, from an operator perspective, configuration data is sent from the commissioning device to the product device in a single step rather than a complex series of single data entry actions.

Furthermore, since a smart wireless device is employed as a commissioning device, it already possesses the ability to automatically discover WLAN configuration, thus simplifying user experience.

Portions of the present invention and corresponding detailed description are presented in terms of software, or algorithms and symbolic representations of operations on data bits within a computer memory. These descriptions and representations are the ones by which those of ordinary skill in the art effectively convey the substance of their work to others of ordinary skill in the art. An algorithm, as the term is used here, and as it is used generally, is conceived to be a self-consistent sequence of steps leading to a desired result. The steps are those requiring physical manipulations of physical quantities. Usually, though not necessarily, these quantities take the form of optical, electrical, or magnetic signals capable of being stored, transferred, combined, compared, and otherwise manipulated. It has proven convenient at times, principally for reasons of common usage, to refer to these signals as bits, values, elements, symbols, characters, terms, numbers, or the like.

It should be borne in mind, however, that all of these and similar terms are to be associated with the appropriate physical quantities and are merely convenient labels applied to these quantities. Unless specifically stated otherwise, or as is apparent from the discussion, terms such as "processing" or "computing" or "calculating" or "determining" or "displaying" or the like, refer to the action and processes of a computer system, a microprocessor, a central processing unit, or similar electronic computing device, that manipulates and transforms data represented as physical, electronic

quantities within the computer system's registers and memories into other data similarly represented as physical quantities within the computer system memories or registers or other such information storage, transmission or display devices.

Note also that the software implemented aspects of the invention are typically encoded on some form of program storage medium or implemented over some type of transmission medium. The program storage medium may be electronic (e.g., read only memory, flash read only memory, electrically programmable read only memory), random access memory magnetic (e.g., a floppy disk or a hard drive) or optical (e.g., a compact disk read only memory, or "CD ROM"), and may be read only or random access. Similarly, the transmission medium may be metal traces, twisted wire pairs, coaxial cable, optical fiber, or some other suitable transmission medium known to the art. The invention is not limited by these aspects of any given implementation.

The particular embodiments disclosed above are illustrative only, and those skilled in the art will appreciate that they can readily use the disclosed conception and specific embodiments as a basis for designing or modifying other structures for carrying out the same purposes of the present invention, and that various changes, substitutions and alterations can be made herein without departing from the scope of the invention as set forth by the appended claims.

What is claimed is:

1. A method for commissioning a target device onto a communication network, comprising:

at the target device including a microprocessor, a wireless radio, and commissioning logic:

receiving a request to initiate a commissioning process with the target device;

establishing a short-range signal transmission path with a wireless device independently of the communication network;

in response to receiving the request, receiving one or more network configuration packets from the wireless device via the short-range signal transmission path, wherein the one or more network configuration packets convey network configuration data associated with the communication network according to a predetermined data format, the network configuration data including at least a security passphrase for accessing the communication network;

executing an application on the target device to decode and process the one or more network configuration packets and recover the network configuration data; and

after receiving the network configuration packets, employing via the wireless radio the network configuration data conveyed in the one or more network configuration packets to enable the target device to join the communication network.

2. The method of claim **1**, wherein the wireless device is selected from a group consisting of a smartphone and a tablet computer.

3. The method of claim **1**, wherein information received via the short-range signal transmission path is received at a first wireless radio of the target device, and the first wireless radio employs at least one of a plurality of radio modulation techniques including frequency shift keying (FSK), phase shift keying (PSK), on-off keying (OOK), and quadrature amplitude modulation (QAM).

4. The method of claim **1**, wherein the short-range signal transmission path is associated with a communication channel based on a proprietary RF communication standard.

5. The method of claim **1**, wherein the short-range signal transmission path is associated with a communication channel based on one of Bluetooth communication, radio frequency identification (RFID), Zigbee, radio frequency for consumer electronics (RF4CE), Z-Wave, and near field communication.

6. The method of claim **1**, further comprising:

contacting the wireless device via the communication network to indicate that the target device has successfully entered the communication network.

7. The method of claim **6**, further comprising:

after contacting the wireless device, continuing the commission process, including receiving, via the communication network, device configuration data from the wireless device.

8. The method of claim **7**, wherein the device configuration data including at least one of an Internet Protocol address, proxy, and gateway configuration.

9. The method of claim **1**, further comprising:

generating one of a visual indication and an audio indication to a user about a status of the commissioning process.

10. The method of claim **1**, further comprising an application that includes a sequence of program instructions directed towards commissioning the target device onto the communication network.

11. A target device, comprising:

a microprocessor;

a wireless radio;

a commissioning logic; and

a memory storing programs for execution by the target device, the programs further including instructions for:

receiving a request to initiate a commissioning process with the target device;

establishing a short-range signal transmission path with a wireless device independently of a communication network;

in response to receiving the request, receiving one or more network configuration packets from the wireless device via the short-range signal transmission path, wherein the one or more network configuration packets convey network configuration data associated with the communication network according to a predetermined data format, the network configuration data including at least a security passphrase for accessing the communication network;

executing an application on the target device to decode and process the one or more network configuration packets and recover the network configuration data; and

after receiving the network configuration packets, employing via the wireless radio the network configuration data conveyed in the one or more network configuration packets to enable the target device to join the communication network.

12. The target device of claim **11**, further comprising an application that includes a sequence of program instructions directed towards commissioning the target device onto the communication network.

13. The target device of claim **11**, wherein the short-range signal transmission path includes an audio signal transmission path, and audio signals are modulated to transmit the one or more network configuration packets over the audio signal transmission path to an audio sensor of the target device.

14. The target device of claim **11**, wherein the short-range signal transmission path includes a visual signal transmis-

sion path, and visual signals are modulated to transmit the one or more network configuration packets over the visual signal transmission path to an optical sensor of the target device.

15. The target device of claim **11**, wherein the communication network includes a wireless local area network (WLAN).

16. A non-transitory computer readable storage medium storing one or more programs configured for execution by a target device for commissioning the target device onto a communication network, the target device including a microprocessor, a wireless radio, and commissioning logic, the one or more programs comprising instructions for:

receiving a request to initiate a commissioning process with the target device;

establishing a short-range signal transmission path with a wireless device independently of the communication network;

in response to receiving the request, receiving one or more network configuration packets from the wireless device via the short-range signal transmission path, wherein the one or more network configuration packets convey network configuration data associated with the communication network according to a predetermined data format, the network configuration data including at least a security passphrase for accessing the communication network;

executing an application on the target device to decode and process the one or more network configuration packets and recover the network configuration data; and

after receiving the network configuration packets, employing via the wireless radio the network configuration data conveyed in the one or more network configuration packets to enable the target device to join the communication network.

17. The non-transitory computer readable storage medium of claim **16**, wherein the one or more programs further comprise instructions for:

generating one of a visual indication and an audio indication to a user about a status of the commissioning process.

18. The non-transitory computer readable storage medium of claim **16**, further comprising an application that includes a sequence of program instructions directed towards commissioning the target device onto the communication network.

19. The non-transitory computer readable storage medium of claim **16**, wherein the one or more programs further comprise instructions for:

contacting the wireless device via the communication network to indicate that the target device has successfully entered the communication network.

20. The non-transitory computer readable storage medium of claim **19**, wherein the one or more programs further comprise instructions for:

after contacting the wireless device, continuing the commission process, including receiving, via the communication network, device configuration data from the wireless device.

* * * * *