UNITED STATES PATENT AND TRADEMARK OFFICE

BEFORE THE PATENT TRIAL AND APPEAL BOARD

SONOS, INC.,

Petitioner,

v.

GOOGLE LLC,

Patent Owner.

U.S. Patent No. 11,050,615

Case No. IPR2023-00806

DECLARATION OF DOUGLAS C. SCHMIDT, Ph.D.

TABLE OF CONTENTS

I. INTRODUCTION 5

II. EDUCATION BACKGROUND, PROFESSIONAL EXPERIENCE, AND OTHER QUALIFICATIONS 5

III. ASSIGNMENT AND MATERIALS CONSIDERED 11

IV. UNDERSTANDING OF THE LAW 12

V. LEVEL OF SKILL IN THE ART 16

VI. THE '615 PATENT 18

A. Effective Filing Date 18

B. Overview 18

C. Prosecution History 24

D. Claims 26

VII. CLAIM CONSTRUCTION 33

VIII. UNPATENTABILITY ANALYSIS 34

A. Overview of the Prior Art 34

1. Roberts 34

2. Asokan 36

3. Suumäki 38

B. Ground 1: Claims 1-3, 5-12, and 15-19 Are Obvious Over Roberts and Asokan 40

1. Claim-By-Claim Analysis 41

a. Claims 1, 11, and 16 41

b. Claim 2 65

c. Claim 3 66

d. Claim 5 68

Sonos Ex 1003, p. 2
Sonos v. Google, IPR2023-00806

e. Claim 6 69
f. Claim 7 71
g. Claim 8 75
h. Claim 9 76
i. Claim 10 78
j. Claim 12 78
k. Claim 15 78
l. Claim 17 79
m. Claim 18 79
n. Claim 19 79
2. Motivation to Combine 79
C. Ground 2: Claims 1-3, 5-12, and 15-19 Are Obvious Over Suumäki 85
1. Claim-by-Claim Analysis 85
a. Claims 1, 11, and 16 85
b. Claim 2 108
c. Claim 3 110
d. Claim 5 113
e. Claim 6 113
f. Claim 7 116
g. Claim 8 117
h. Claim 9 118
i. Claim 10 119
j. Claim 12 119
k. Claim 15 119
l. Claim 17 120
m. Claim 18 120

Sonos Ex 1003, p. 3
Sonos v. Google, IPR2023-00806

n. Claim 19 120
2. Motivation to Combine 120
D. Secondary Considerations of Non-Obviousness 122

Sonos Ex 1003, p. 4
Sonos v. Google, IPR2023-00806

I, Douglas C. Schmidt, Ph.D., declare as follows:

I. INTRODUCTION

1. I have been retained Sonos, Inc. ("Sonos") as an independent expert consultant in this proceeding before the United States Patent and Trademark Office ("PTO"). I am not an employee of Sonos or any affiliate or subsidiary of Sonos.

2. I have been asked to consider whether certain references teach or suggest the features recited in certain claims of U.S. Patent No. 11,050,615, which I refer to herein as the '615 patent.

3. My opinions and the bases for my opinions are set forth below.

4. I am being compensated at my ordinary and customary rate of $550 per hour for my work, plus reimbursement for any reasonable expenses. My compensation is based solely on the amount of time that I devote to activity related to this case and is in no way contingent on the nature of my findings, the presentation of my findings in testimony, or the outcome of this or any other proceeding. I have no other financial interest in this proceeding.

II. EDUCATION BACKGROUND, PROFESSIONAL EXPERIENCE, AND OTHER QUALIFICATIONS

5. My curriculum vitae ("CV") is attached hereto as Attachment A and provides an accurate identification of my background and experience.

6. I am the Cornelius Vanderbilt Professor of Engineering in the Department of Electrical Engineering and Computer Science at Vanderbilt

University in Nashville, TN, where I also serve as the Associate Provost for Research Development and Technologies and the co-Director of the Data Science Institute. My research spans a broad range of software systems, including distributed object computing, middleware platforms, real-time operating systems, and distributed real-time and embedded systems. I became a Full Professor with tenure at Vanderbilt University in January 2003.

7. I received my Doctor of Philosophy (Ph.D.) degree in Computer Science from the University of California (UC) Irvine in Irvine, CA in 1994. I also earned a Master's Degree in Computer Science from UC Irvine in 1990, as well as a Bachelor's Degree in Sociology in 1984 and Master's Degree in Sociology in 1986 from the College of William and Mary in Williamsburg, VA. I first started programming in 1983 when I was an undergraduate student taking statistics courses. From 1985 through 1994 I learned how to program in Pascal, C, C++, Ada, Prolog, and Lisp, both at the College of William and Mary and at UC Irvine.

8. I have been a full-time university professor since 1994. I was previously a tenured professor at the University of California, Irvine in the Electrical and Computer Engineering department, from 2000 to 2003, and before that at Washington University in St. Louis, MO in the Computer Science and Engineering department and the Mallinckrodt Institute of Radiology, from 1994 to 1999. In addition, I served as the Chief Technology Officer and Deputy Director for the

Software Engineering Institute (SEI) at Carnegie Mellon University from 2010 to 2012, where I led the SEI's research, development, and operational efforts related to software engineering and cyber-security.

9. For the past three decades, my research has focused on distributed real-time and embedded (DRE) systems, which has yielded the ACE, Java ACE, TAO, and CIAO middleware frameworks. The millions of lines of object-oriented code in these frameworks provide layers of infrastructure and distribution middleware that simplify the development of concurrent and networked software apps and services. These middleware frameworks constitute some of the most successful examples of software research and development (R&D) ever transitioned from research to industry, being widely used by thousands of companies and agencies worldwide in many domains, including national defense and homeland security, datacom/telecom, financial services, healthcare, and online gaming.

10. My research on DRE systems has been funded by various organizations, including both federal agencies, such as DARPA, NSF, NASA, NIH, the U.S. Air Force, and the U.S. Navy, as well as leading companies, such as Northrup Grumman, Raytheon, Lockheed-Martin, Boeing, McDonnell-Douglas, General Electric, Siemens Medical Engineering, and Kodak Health Imaging Systems. I have also received other honors and awards, including election to professional organizations, engagements for invited talks, and the 2015 Award for

Excellence in Teaching from the Vanderbilt University Department of Electrical Engineering.

11. Besides my academic and research experience, from 2010 to 2014 I served as a member of the United States Air Force Scientific Advisory Board (SAB), where I was the Vice Chair of the SAB's Cyber Situational Awareness study, which conducted a comprehensive review of the U.S. Air Force's tactics, techniques, and procedures related to secure network-centric mission operations. I have also served on the Advisory Board for the U.S. Naval Air Systems Command (NavAir) Future Airborne Capability Environment (FACE) and was a co-lead of a task force on "Published Open Interfaces and Standards" for the U.S. Navy's Open Systems Architecture initiative.

12. For over 30 years, I have conducted and supervised many research projects involving a wide range of software-related topics, including patterns, optimization techniques, and empirical analyses of communication protocol stacks, web servers, and object-oriented middleware frameworks for distributed real-time embedded systems and mobile-/web-based cloud computing applications. I have published 650+ scholarly articles and technical papers, and I am the co-author/editor of 10+ books or book-length manuscripts on various topics, including software architecture, network programming, object-oriented frameworks, distributed and

real-time systems, open-source middleware platforms, and web-/mobile-based cloud computing applications.

13. My work has been cited 36,500+ times across a comprehensive spectrum of high-impact publications, and my current h-index[1] score is 86, which reveals the significant impact of my publications on scholarly literature in the field of computer science. I have also supervised the research of more than 40 Ph.D. and Master's graduate students to date. Together with conducting and publishing my own research, I have served on the editorial board of many journals, including publications by IEEE and the ACM, and I have been a guest editor of many special issue journals based on my research expertise.

14. On top of my research experience, I have decades of hands-on programming experience with a variety of different programming languages. I began programming with C in 1985 and have programmed with object-oriented languages since 1986, when I began to program with C++. I have programmed with Java and other related object-oriented languages since the mid-1990s and early 2000s. Starting in 1991, while at the University of California Irvine, I led the development of one of the first C++ object-oriented frameworks for concurrent and

[1] The h-index is a popular measure of scholarly productivity. The definition of the index is that a scholar with an index of h has published h papers each of which has been cited in other papers at least h times. Thus, the h-index reflects both the number of publications and the number of citations per publication.

networked middleware and applications (ACE). Starting in 1996, I developed one of the first Java object-oriented frameworks for concurrent and networked middleware and applications (Java ACE).

15. Since 1990, I have taught more than 2,000 students in dozens of face-to-face courses on network programming to both undergraduate and graduate students at UC Irvine, Washington University St. Louis, and Vanderbilt University. Since 2013, I have taught mobile cloud computing to more than 400,000 students in online courses, including Massive Open Online Courses (MOOCs) on the Coursera platform, which have focused on technologies like mobile app programming with Android, Java, and JavaScript, as well as programming cloud computing platforms using various web services frameworks, such as Spring and Node.js.

16. Together with my regular course offerings, over the past 30 years I have also taught 600+ short-courses and tutorials on many subjects, including: software design patterns, object-oriented and functional programming; systems programming and network programming for UNIX and Windows; multi-threading and synchronization; concurrent and parallel programming; and various courses on distributed systems, real-time and embedded systems, TCP/IP, web apps and services, compiler construction, algorithms, and data structures.

III. ASSIGNMENT AND MATERIALS CONSIDERED

17. I have been asked to provide analysis and explain the subject matter of the ’615 patent, including the state of the art when the ’615 patent application was filed. I have also been asked to consider, analyze, and explain certain prior art to the ’615 patent including how that art relates to the challenged claims of the ’615 patent and to provide my opinions regarding whether that art invalidates the claimed subject matter.

18. The opinions expressed in this declaration are not exhaustive of opinions I may offer in the future regarding the unpatentability of the claims of the ’615 patent. Therefore, the fact that I do not address a particular point should not be understood to indicate an agreement on my part that any claim complies with the requirements of any applicable patent or other rule.

19. I reserve the right to amend and supplement this declaration in light of additional evidence, arguments, or testimony presented during this IPR or related proceedings on the ’615 patent.

20. In forming the opinions set forth in this declaration, I have considered and relied upon my education, knowledge of the relevant field, knowledge of scientific and engineering principles, and my experience. I have also reviewed and considered the ’615 patent (Exhibit 1001), its prosecution history (Exhibit 1002), and the following additional materials:

Exhibit	Description
1004	U.S. Patent No. 7,616,594 to Roberts et al.
1005	U.S. Patent No. 9,288,228 to Suumäki
1006	U.S. 2006/0251256 A1 to Asokan et al.
1007	Excerpt from Microsoft Computer Dictionary, 5th Ed. (2002)
1008	NFC Forum, NFC Data Exchange Format (NDEF), Technical Specification, NDEF 1.0 (July 24, 2006)
1009	U.S. Patent No. 7,738,494 to Takayama
1010	U.S. Patent No. 7,948,925 to Miyabayashi et al.
1011	U.S. Pub. 2013/0010018 A1 to Economy
1012	ISO/IEC 18092 Standard (April 1, 2004)
1013	U.S. Patent No. 8,975,752 to Chow et al.
1014	File History of U.S. App. No. 13/839,828
1015	File History of U.S. App. No. 14/927,406
1017	googl to Eisenhut et al.
1018	U.S. Patent No. 7,747,751 to Chen
1019	Specification of the Bluetooth System, Ver. 4.0 (June 30, 2010)
1020	NFC Forum, Connection Handover Technical Specification (July 7, 2010)
1021	NFC Forum, Logical Link Control Protocol (Dec. 11, 2009)

IV. UNDERSTANDING OF THE LAW

21. I am not an attorney, but have been instructed in and applied the law as described in this section.

22. I understand that the first step in comparing an asserted claim to the prior art is for the claim to be properly construed. I address how a person of ordinary skill in the art (POSITA) would have understood the claims of the alleged invention in Section VII below.

23. I have been further instructed and understand that a patent claim is unpatentable and invalid as obvious if the subject matter of the claim as a whole would have been obvious to a POSITA of the claimed subject matter as of the time of the invention at issue. I understand that when assessing the obviousness of claimed subject matter, the following factors are evaluated: (1) the scope and content of the prior art; (2) the difference or differences between each claim of the patent and the prior art; and (3) the level of ordinary skill in the art at the time the patent was filed.

24. I understand that claimed subject matter may be obvious in view of more than one item of prior art. I understand, however, that it is not enough to show simply that all the limitations of the claimed subject matter are spread throughout the prior art. Instead, for claimed subject matter to be obvious over multiple references, there must be some reason or motivation for a POSITA to combine the prior art references to arrive at the claimed subject matter.

25. I have been informed that, in seeking to determine whether an invention that is a combination of known elements would have been obvious to a POSITA at

the time of the invention, one must consider the references in their entirety to ascertain whether the disclosures in those references render the combination obvious to such a person.

26. I have been informed and understand that, while not required, the prior art references themselves may provide a teaching, suggestion, motivation, or reason to combine, but other times the motivation linking two or more prior art references is common sense to a POSITA at the time of the invention.

27. I understand that a particular combination may be proven obvious by showing that it was obvious to try the combination. I have been informed that, if a technique has been used to improve one device, and a POSITA would recognize that it would improve similar devices in the same way, using the technique is obvious unless its actual application is beyond his or her skill.

28. I further understand that an obviousness analysis recognizes that market demand, rather than scientific literature, often drives innovation, and that a motivation to combine references also may be supplied by the direction of the marketplace. For example, when there is a design need or market pressure to solve a problem and there are a finite number of identified, predictable solutions, a POSITA has good reason to pursue the known options within his or her technical grasp because the result is likely the product not of innovation but of ordinary skill and common sense.

29. I have been informed that the combination of familiar elements according to known methods is likely to be obvious when it does no more than yield predictable results. Thus, where all of the elements of a claim are used in substantially the same manner, in devices in the same field of endeavor, the claim is likely obvious.

30. Additionally, I understand that a patent is likely to be invalid for obviousness if a POSITA can implement a predictable variation or if there existed at the time of the invention a known problem for which there was an obvious solution encompassed by the patent's claims. Therefore, when a work is available in one field of endeavor, design incentives and other market forces can prompt variations of it, either in the same field or a different one.

31. I further understand that combining embodiments related to each other in a single prior art reference would not ordinarily require a leap of inventiveness.

32. I also understand that a POSITA must have had a reasonable expectation of success when combining references for claimed subject matter to be obvious.

33. I have been informed and I understand that factors referred to as "objective indicia of non-obviousness" or "secondary considerations" are also to be considered when assessing obviousness when such evidence is available. I understand that these factors can include: (1) commercial success; (2) long-felt but

unresolved needs; (3) copying of the invention by others in the field; (4) initial expressions of disbelief by experts in the field; (5) failure of others to solve the problem the claimed subject matter solved; and (6) unexpected results.

34. I also understand that evidence of objective indicia of non-obviousness must be commensurate in scope with the claimed subject matter. I further understand that there must be a relationship, sometimes referred to as a "nexus," between any such secondary indicia and the claimed invention.

35. Finally, I have been informed that one cannot use hindsight to determine that an invention was obvious.

36. I provide my opinions in this declaration based on the guidelines set forth above.

V. LEVEL OF SKILL IN THE ART

37. I have been informed and understand that the level of ordinary skill in the relevant art at the time of the invention is relevant to inquiries such as the meaning of claim terms, the meaning of disclosures found in the prior art, and the reasons a POSITA may have for combining references.

38. I have been informed and understand that factors that may be considered in determining the level of ordinary skill include: (1) the education of the inventor; (2) the type of problems encountered in the art; (3) prior art solutions to those problems; (4) rapidity with which innovations are made; (5) sophistication of

the technology; and (6) education level of active workers in the relevant field. I have been further informed and understand that a person of ordinary skill in the art (POSITA) is also a person of ordinary creativity.

39. In my opinion, a POSITA in the technology field of the ’615 patent would have had a degree in computer engineering, computer science, or a similar discipline, along with 2 years of professional experience in the fields of networking and network-based systems or applications, or an equivalent level of skill, knowledge, and experience. This POSITA would be aware of and generally knowledgeable about how devices were provisioned onto wireless networks, along with standards applicable to well-known methods for communication such as Wifi, Bluetooth, and NFC available at the time the ’615 patent was filed.

40. In view of my educational background (*e.g.* a Ph.D. in Computer Science obtained in 1994) and decades of computer programming and web-based application design experience, as discussed in Section II, I was a person of more than the ordinary level of skill in the art as of April 2012. In forming my opinion, I have drawn on my academic background and professional experiences. My opinions herein, however, were formed taking into account the perspective of an ordinarily skilled artisan.

VI. THE ’615 PATENT

A. Effective Filing Date

41. I understand that the application leading to the ’615 patent was filed on December 9, 2019.

42. Based on my review of the ’615 patent, I note that it also makes reference back through a chain of continuation applications to a March 15, 2013 non-provisional application filing and an April 11, 2012 provisional application filing.

43. For purposes of this declaration, I have been instructed to use April 11, 2012 as the effective filing date of the ’615 patent. My opinions in this declaration were formed from the perspective of a POSITA as of April 11, 2012, including both the knowledge of a POSITA at that time as well as how a POSITA would have understood the prior art.

B. Overview

44. The ’615 patent explains that it relates to “an apparatus and method for seamless commissioning of electronic devices onto wireless local area networks (WLANs).” (Ex. 1001, 1:37-40.)

45. The patent begins by explaining that in the prior art, “[a]s one skilled in the art will appreciate, wireless electronic devices do not merely connect themselves to the nearest wireless network.” (*Id.*, 1:62-64.) “Rather, they must be ‘commissioned’ onto a desired network” (*i.e.*, “provided with configuration data to enable them to join”). (*Id.*, 1:65-2:2.)

46. The ’615 patent goes on to explain that “at this point in time, virtually every electronic device is different in the manner in which they are commissioned onto a wireless network….” (*Id.*, 2:3-5.)

47. The patent continues to discuss what it perceives as issues with prior art approaches to device commissioning.

48. For instance, the ’615 patent states that in the prior art, the commissioning process can entail a complicated “sequence of switch actuations,” “rudimentary keypads” that require entry of “configuration information, often in cryptic and unintelligible form,” or separate “coupled device[s]” like “remote controls” that are used “to enter network names and passwords.” (*Id.*, 2:5-14.)

49. According to the ’615 patent, “virtually all of the” other prior art “commissioning techniques” “require physical or administrative access to either the access point … or to special commissioning equipment which … may not be easily obtained.” (*Id.*, 6:35-39.)

50. The ’615 patent explains that this need for complicated procedures, administrative access, or special equipment is problematic because it requires users to “either be very smart” or seek “assistance from someone who is knowledgeable.” (*Id.*, 2:13-16.)

51. After discussing what it considered to the available art relating to network commissioning, the ’615 patent goes on to detail its own purportedly

"superior technique for commissioning one or more electronic devices onto an existing wireless network" that "an average consumer can employ without undue distress." (*Id.*, 2:17-19, 29-33.)

52. In this regard, the patent employs a "smart wireless device" with a "transducer" that can transmit "WLAN configuration packets" to a "target device" to allow that device to "join a WLAN." (*Id.*, 2:43-64.)

53. Figure 3, which I have reproduced below for reference, shows an "access point 301 that controls access to and communication" to a "WLAN 304" (i.e., a typical wireless local area network). (*Id.*, 7:3-8.)

54. As shown in the figure, "another device 307 … is not yet coupled to the access point via the WLAN 304, and … requires commissioning…." (*Id.*, 7:28-30.)

55. Multiple devices are already connected to this WLAN. This includes a "printer 305 and a digital media receiver 306" are "coupled to the access point 301 via the WLAN 304." (*Id.*, 7:25-27.) A "smart wireless device 321" is also part of the network and can be used to "commission the other device 307" by "transmit[ting] configuration information over a transmission path 322" to that device. (*Id.*, 7:49-55.)

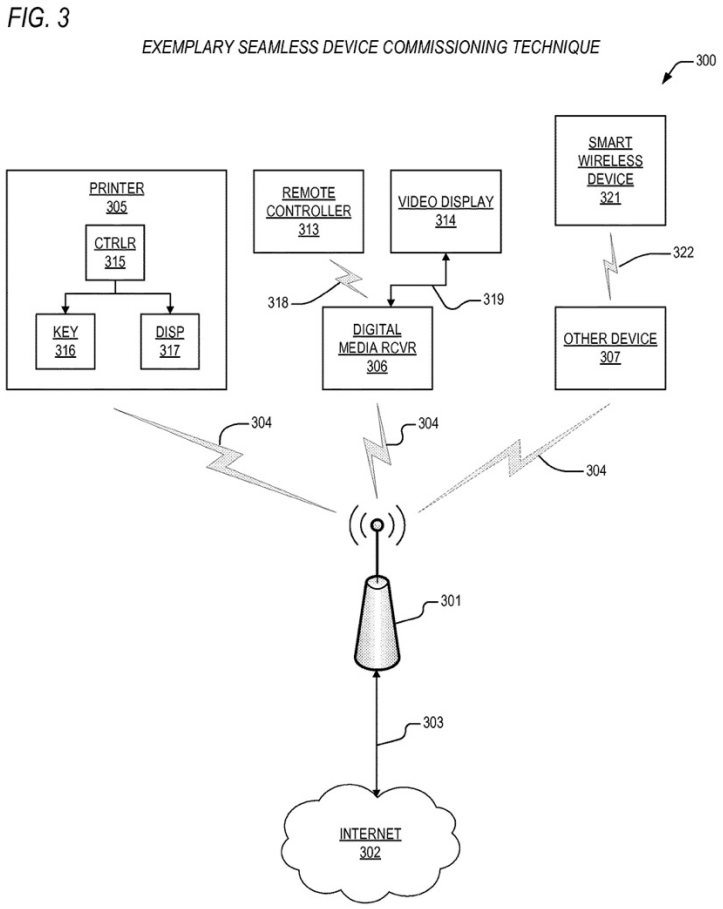

(*Id.*, Fig. 3.)

56. The "smart wireless device" can be a "smart cellular telephone" or "tablet computer." (*Id.*, 8:1-8.)

57. Figure 4, also reproduced below for reference, provides a high-level depiction of one such device.

58. As shown in the figure, the device includes a "microcomputer 401" "coupled to commissioning logic 402" and a "touchscreen 404" / "display 405." (*Id.*, 9:7-10.)

59. The device has a "wireless radio 406" that allows it to participate in and communicate via the "WLAN 408." (*Id.*, 9:10-15, 44-47.)

60. The '615 patent explains that "the smart wireless device 321" also "utilizes a side band, proximity based, communication channel 322 that is established between the smart wireless device 321 and the other device 307 to be commissioned onto the WLAN 304." (*Id.*, 8:9-13.)

61. The patent goes on to identify numerous acceptable means of engaging in such a "side band" communication. This can be a "camera flash," light emitted by the "display backlight," or a transmitter that utilizes "BLUETOOTH®[,]" "near field communications (NFC)[,]" "mechanical vibration/accelerometer transmission[,]" "RF identification (ID), … Zigbee®, radio frequency for consumer electronics (RF4CE®), Z-Wave®, or other proprietary standards." (*Id.*, 8:42-67.) Regardless of its form, the "transmitting element" can employ "well-known communication protocols, error correcting codes, line coding, and/or modulation techniques." (*Id.*, 10:1-6.)

62. In the example of Figure 4, the "smart wireless device" uses "camera flash 407" to "convey configuration data" 409 "to the device to be commissioned." (*Id.*, 9:13-15.)

FIG. 4

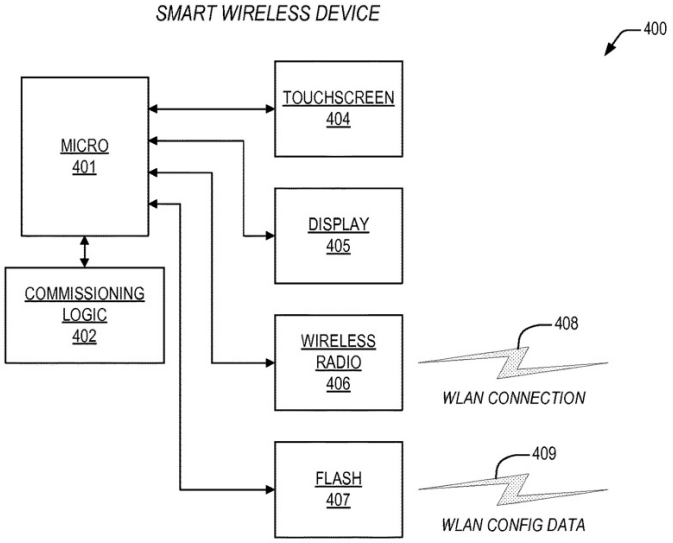

(*Id.*, Fig. 4.)

63. While "additional or different configuration data" can also be employed, in one embodiment "the WLAN configuration data comprises the name of the WLAN, security mode, and any required security passphrase." (*Id.*, 8:32-37.)

64. Figure 5, also reproduced below, provides a high-level depiction of the other device 307 to be "commissioned" onto the existing WLAN by the smart wireless device. (*Id.*, 10:7-11.)

65. As shown, this device also has a "microcontroller 501" and "wireless radio 504." (*Id.*, 10:11-14.)

66. It includes a "receiving element[]" allowing it to receive the configuration data transmitted by the smart device 321. (*Id.*, 7:55-59.) In figure 5 this is an "optical sensor 503" that is able to receive the "WLAN configuration data"

transmitted by the smart device's flash over "optical transmission link 509." (*Id.*, 10:13-17.)

FIG. 5

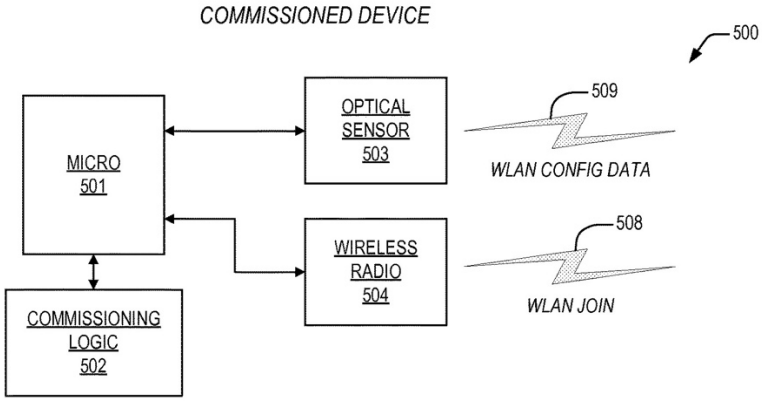

(*Id.*, Fig. 5.)

67. The 615 patent explains that "[i]n operation, the other device 307 extracts the WLAN configuration data from the received configuration message and employs the configuration data in order to join the WLAN 304." (*Id.*, 8:38-41.)

68. In some embodiments in the patent, further "supplemental configuration data … as required" can be relayed to the target device later. (*See id.*, 10:34-40.)

C. Prosecution History

69. As noted above, I have reviewed the '615 patent's prosecution history.

70. During prosecution, the claims were subject to a double patenting rejection over U.S. Patent Nos. 9,485,790 and 9,198,204. (*See* Ex. 1002, pp. 88-93.)

71. While the claims were not rejected over these references, the Examiner discussed U.S. Apps. 2013/0026947 to Economy et al. (which I will refer to as "Ecomony") and 2013/0223279 to Tinnakornsrisuphap et al. (which I will refer to as "Tinnakornsrisuphap"). (*Id.*, p. 93.)

72. In earlier applications to which the'615 patent claims priority, the applicant had argued that Economy does not teach a "target device" with a "microcontroller or instructions" to "'decode and process WLAN configuration packets' as claimed." (Ex. 1014, pp. 174-175.) Economy is is directed to a system for adding a light dimmer switch—and not a computer, laptop, tablet, or the like—to a network. (*See id.*)

73. Further, the applicant also argued that while Economy does transmit network configuration data to the dimmer switch to be add to a network, it does not employ "WLAN configuration packets … received at the first wireless radio." (Ex. 1015, pp. 145-146.)

74. The Examiner appeared to agree with applicant's characterization of Economy, explaining that the reference teaches only a "wireless control device" that "exchanges information with [a] dimmer switch in order for the dimmer switch to connect with [a] wireless router." (Ex. 1002, p. 93.)

75. With respect to the other reference identified by the Examiner—Tinnakornsrisuphap—the Examiner stated that the reference does "teach[] the use

of a mobile device," "a smart appliance" with a processor, "and a WLAN access point…." (*Id.*, p. 94.)

76. But, the Examiner characterized "the structure of the dimmer switch of Economy and the smart appliance of Tinnakornsrisuphap" as "fundamentally different" such that it would not have been obvious to employ the "smart appliances" of Tinnakornsrisuphap in Economy's network information exchange method. (*Id.*)

77. The '615 patent's claims were allowed after a terminal disclaimer was filed. (*See id.*, pp. 168-174.).

D. Claims

78. For reference, claims 1-3, 5-12, and 15-19 of the '615 patent are reproduced below:

> **1.** A method for commissioning a target device onto a communication network, comprising:
>
> at the target device including a microprocessor, a wireless radio, and commissioning logic:
>
> receiving a request to initiate a commissioning process with the target device;
>
> establishing a short-range signal transmission path with a wireless device independently of the communication network;
>
> in response to receiving the request, receiving one or more network configuration packets from the

wireless device via the short-range signal transmission path, wherein the one or more network configuration packets convey network configuration data associated with the communication network according to a predetermined data format, the network configuration data including at least a security passphrase for accessing the communication network;

executing an application on the target device to decode and process the one or more network configuration packets and recover the network configuration data; and

after receiving the network configuration packets, employing via the wireless radio the network configuration data conveyed in the one or more network configuration packets to enable the target device to join the communication network.

2. The method of claim **1**, wherein the wireless device is selected from a group consisting of a smartphone and a tablet computer.

3. The method of claim **1**, wherein information received via the short-range signal transmission path is received at a first wireless radio of the target device, and

Sonos Ex 1003, p. 27
Sonos v. Google, IPR2023-00806

the first wireless radio employs at least one of a plurality of radio modulation techniques including frequency shift keying (FSK), phase shift keying (PSK), on-off keying (OOK), and quadrature amplitude modulation (QAM).

5. The method of claim **1**, wherein the short-range signal transmission path is associated with a communication channel based on one of Bluetooth communication, radio frequency identification (RFID), Zigbee, radio frequency for consumer electronics (RF4CE), Z-Wave, and near field communication.

6. The method of claim **1**, further comprising:

contacting the wireless device via the communication network to indicate that the target device has successfully entered the communication network.

7. The method of claim **6**, further comprising:

after contacting the wireless device, continuing the commission process, including receiving, via the communication network, device configuration data from the wireless device.

8. The method of claim **7**, wherein the device configuration data including at least one of an Internet Protocol address, proxy, and gateway configuration.

9. The method of claim **1**, further comprising:

Sonos Ex 1003, p. 28
Sonos v. Google, IPR2023-00806

generating one of a visual indication and an audio indication to a user about a status of the commissioning process.

10. The method of claim **1**, further comprising an application that includes a sequence of program instructions directed towards commissioning the target device onto the communication network.

11. A target device, comprising:

a microprocessor;

a wireless radio;

a commissioning logic; and

a memory storing programs for execution by the target device, the programs further including instructions for:

receiving a request to initiate a commissioning process with the target device;

establishing a short-range signal transmission path with a wireless device independently of a communication network;

in response to receiving the request, receiving one or more network configuration packets from the wireless device via the short-range signal transmission path, wherein the one or more network configuration packets convey network

configuration data associated with the communication network according to a predetermined data format, the network configuration data including at least a security passphrase for accessing the communication network;

executing an application on the target device to decode and process the one or more network configuration packets and recover the network configuration data; and

after receiving the network configuration packets, employing via the wireless radio the network configuration data conveyed in the one or more network configuration packets to enable the target device to join the communication network.

12. The target device of claim **11**, further comprising an application that includes a sequence of program instructions directed towards commissioning the target device onto the communication network.

15. The target device of claim **11**, wherein the communication network includes a wireless local area network (WLAN).

16. A non-transitory computer readable storage medium storing one or more programs configured for

Sonos Ex 1003, p. 30
Sonos v. Google, IPR2023-00806

execution by a target device for commissioning the target device onto a communication network, the target device including a microprocessor, a wireless radio, and commissioning logic, the one or more programs comprising instructions for:

receiving a request to initiate a commissioning process with the target device;

establishing a short-range signal transmission path with a wireless device independently of the communication network;

in response to receiving the request, receiving one or more network configuration packets from the wireless device via the short-range signal transmission path, wherein the one or more network configuration packets convey network configuration data associated with the communication network according to a predetermined data format, the network configuration data including at least a security passphrase for accessing the communication network;

executing an application on the target device to decode and process the one or more network configuration packets and recover the network configuration data; and

Sonos Ex 1003, p. 31
Sonos v. Google, IPR2023-00806

after receiving the network configuration packets, employing via the wireless radio the network configuration data conveyed in the one or more network configuration packets to enable the target device to join the communication network.

17. The non-transitory computer readable storage medium of claim **16**, wherein the one or more programs further comprise instructions for:

generating one of a visual indication and an audio indication to a user about a status of the commissioning process.

18. The non-transitory computer readable storage medium of claim **16**, further comprising an application that includes a sequence of program instructions directed towards commissioning the target device onto the communication network.

19. The non-transitory computer readable storage medium of claim **16**, wherein the one or more programs further comprise instructions for:

contacting the wireless device via the communication network to indicate that the target device has successfully entered the communication network.

Sonos Ex 1003, p. 32
Sonos v. Google, IPR2023-00806

VII. CLAIM CONSTRUCTION

79. I am not a legal expert or an attorney and offer no opinions on the law. I understand that claim construction is a matter of law. However, I have been informed by counsel of the legal standards that apply to claim construction in an *inter partes* review, and I have applied them in forming my opinions. I understand that during an *inter partes* review, the same claim construction standard used in federal district court is applied when addressing the meaning of claim terms.

80. I have been informed that the words of a claim are generally given the ordinary and customary meaning that the term or phrase would have to POSITA at the time of the invention in view of the surrounding claim language, the specification and the file history (collectively, the "intrinsic evidence" or "intrinsic record").

81. I also understand that courts may consider extrinsic evidence, such as expert and inventor testimony, dictionaries, and learned treatises (collectively, the "extrinsic evidence" or the "extrinsic record"), but that such extrinsic evidence should be given less weight than the intrinsic evidence.

82. In my opinion, the terms of the '615 patent's claims do not require further construction and can be afforded their plain and ordinary meaning for purposes of the analysis of the prior art that I am conducting in this declaration.

VIII. UNPATENTABILITY ANALYSIS

83. For the reasons I explain in greater detail below, it is my opinion that as of the effective filing date of the ’615 patent, a POSITA would have considered claims 1-3, 5-12, and 15-19 of the ’615 patent to be unpatentable as obvious over the prior art discussed in this declaration.

A. Overview of the Prior Art

84. The following paragraphs provide an overview of the main prior art references I discuss throughout this declaration.

1. Roberts

85. Roberts indicates on its face that it issued November 10, 2009. (*See* Ex. 1004, Cover.) In view of this date of issuance, which is more than a year before the ’615 patent’s April 2012 filing, I understand that Roberts is prior art under § 102(b).

86. Roberts is not cited by the ’615 patent and was not considered during prosecution. (*See generally* Exs. 1001, 1002.)

87. Roberts explains that it relates to a system for “establishing communication with a wireless network.” (Ex. 1004, 1:12-14.)

88. According to Roberts, before joining such a network, a “device needs Wi-Fi specific settings, such as a service set identifier (SSID), a cryptographic key, and operating channels.” (*Id.*, 1:29-32.)

89. Roberts explains, however, that existing methods for "[c]onfiguring a device" are "difficult" to use. (*Id.*, 1:26-29.)

90. Roberts identifies a number of reasons for this. For instance, a user must often "manually enter the configuration in the device, which can be a very confusing process." (*Id.*, 1:32-35.)

91. Roberts goes on to propose a system and method meant to address the limitations of prior art network configuring methods that is more user friendly.

92. In this regard, Roberts teaches a system in which a new "enrollee device" is automatically provided with the "necessary configuration settings" needed to join an existing wireless network by a "registrar" device that "is already connected to the network." (Ex. 1004, 1:47-55.)

93. Figure 5, reproduced below, provides an overview of Roberts's system and method:

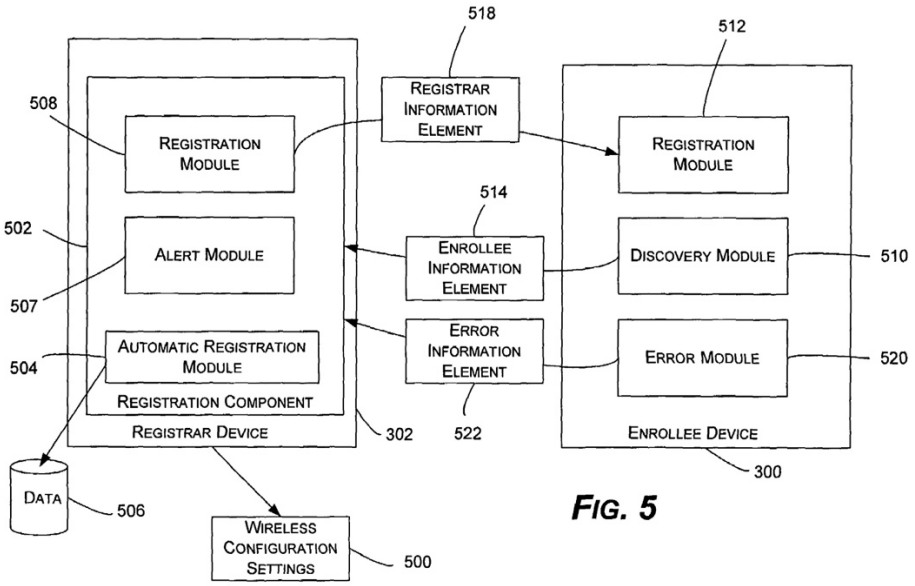

FIG. 5

(*Id.*, Fig. 5.)

94. The process begins on an "enrollee device 300" seeking to join an existing message. A user imitates the process causing the device to transmit an "enrollee information element 514." (*Id.*, 5:44-53.)

95. In response, a communication channel is established between the enrollee device and a "registrar device 302" that is already part of the wireless network. (*Id.*, 2:6-10; 7:43-52; 9:17-20, 42-45; 11:18-21, 33-40, 62-65; 12:1-6.; Figs. 5, 6.) The registrar transmits an "registrar information element 518" back to the enrollee over this channel. (*See id.*) Either an "in band" or "out of band" communication channel such as Bluetooth can be employed. (*Id.*, Abstract; 1:66-2:19; 6:26-28; 7:43-52.)

96. The "element 518" transmitted by the registrar to the enrollee over the out of band channel includes the network configuration information—including the network SSID and key—the enrollee device needs to join the network. (*See id.*, 7:30-42; Fig. 8.)

2. Asokan

97. Asokan indicates on its face that it published November 9, 2006. (Ex. 1006, Cover.) In view of this date of publication, which is more than a year before the '615 patent's April 2012 filing, I understand that Asokan is prior art under §

102(b). Asokan is not cited by the ’615 patent and was not considered during prosecution. (*See generally* Exs. 1001, 1002.)

98. Asokan teaches “[m]ethods and systems for managing access to a wireless local area network” by new or guest devices. (Ex. 1006, Abstract; ¶ [0002].)

99. Asokan explains that rather than using the same in-band method of communication employed by the existing wireless network to transmit configuration information to a new device, where possible its system “utilizes an out-of-band channel … to communicate authentication key and network address information to” that device. (*Id.*, ¶ [0010].)

100. According to Asokan, this out-of-band channel can be based on “NFC, short range wireless communication, infrared, Bluetooth, UWB, WiFi, RFID, USB memory stick, etc.” (*Id.*)

101. Asokan explains that using an out-of-band channel to transmit network commissioning information (as opposed to the wireless network itself) allows for “simpler and more efficient wireless network setup and administration” and “provides for an increase to security and usability….” (*Id.*, ¶¶ [0008], [0010], [0025]; Abstract.)

3. Suumäki

102. Suumäki indicates on its face that it was filed August 5, 2011. (*See* Ex. 1005, Cover.) In view of this date of filing, which is before the '615 patent's own April 2012 date of filing, I understand that Suumäki is § 102(e) art to the '615 patent.

103. Suumäki is not cited by the '615 patent and was not considered during prosecution. (*See generally* Exs. 1001, 1002.)

104. Suumäki teaches a system and method for network "setup … using an out-of-band carrier" such as "near-field communication" (also referred to as "NFC") (Ex. 1005, 1:9-11, 52-51; *see also id.*, 2:7-10.)

105. According to Suumäki, because NFC is used, a new device can be commissioned with network settings with only a "simple wave or touch." (*Id.*, 1:65-2:3.)

106. In one example, Suumäki discusses an existing "IEEE 802.11 in-band" "WLAN network" that includes a "device A" and a "hub device AP/GO" such as "an access point device (AP) in an infrastructure network…." (*Id.*, 7:28-35; *see also id.*, 20:65-21:3.)

107. A "device B" seeks to join this network. (*See id.*, 7:20-8:9.)

108. To commission device B with the required network credentials, "the user of device A" "touch[es] the NFC transponder of device A to the NFC

transponder of device B in order to initiate a short-range carrier transport switch procedure with device B." (*Id.*, 21:37-44.)

109. This is shown in Figure 1D, which is reproduced below:

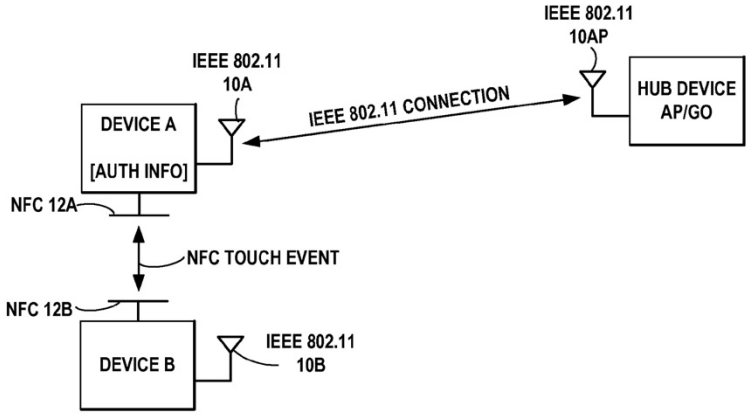

(*Id.*, Fig. 1D.)

110. Upon creation of an NFC link between the devices, "authentication information 25 and connection information, such as the MAC address 26 of the hub device AP/GO" is then transmitted from device A to device B. (*Id.*, 21:52-59.)

111. When it receives this NFC transmission from device A over the previously created NFC communication link, device B extracts the network authentication and connection from the transmission and uses it to communicate with the hub over the wireless network to complete the network configuration process. (*See id.*, 22:1-13; *see also id.*, 27:17-21; Fig. 1G.)

112. So, in sum, Suumäki's system allows a new device to be "automatically connect[ed] to the hub device AP/GO" managing an existing IEEE 802.11 wireless

network "and acquire credentials for network access, without requiring the user to type in a PIN number." (*Id.*, 21:32-37.)

B. Ground 1: Claims 1-3, 5-12, and 15-19 Are Obvious Over Roberts and Asokan

113. In my opinion, a POSITA would have considered Roberts and Asokan to be within the scope of the prior art and highly relevant to the patentability of the '615 patent's claims.

114. In my opinion, moreover, when viewed and considered in light of the knowledge possessed by a POSITA, Roberts and Asokan together disclose all the limitations of and render claims 1-3, 5-12, and 15-19 of the '615 patent obvious.

115. In addition, not only would a POSITA have been motived to combine and collectively consider the teachings of these references to arrive at the subject matter claimed by the '615 patent, but they would have had a reasonable expectation of success when doing so.

116. As I will explain in greater detail below, Roberts itself teaches what the '615 patent's claim require: it is directed to and discloses a system and method for communicating network configuration information from an existing device on a wireless network to a new device that seeks to join the network. While Roberts does not explicitly reference certain well-known hardware components, like a wireless radio, its description establishes that these components would have obviously been present in its devices. Further, Roberts teaches that a side-band communication

channel (like Bluetooth) can be employed when transmitting network configuration information from one device to another. To the extent a POSITA would have required additional motivation beyond what Roberts itself already provides to employ Bluetooth, this is supplied by Asokan. Asokan explains that an out-of-band communication channel (instead of the Wi-Fi network itself) should be used where possible when transmitting configuration information to improve security, enable better control over guest access, and achieve other benefits.

1. Claim-By-Claim Analysis

a. Claims 1, 11, and 16

117. Claims 1, 11, and 16 are all independent.

118. While they use slightly different language, these claims embrace the same subject matter. In fact, the only difference is that claim 1 is directed to a "method." Claim 11 is directed to a "target device." And, claim 16 is directed to "non-transitory computer readable storage medium."

119. Because of their similarity, I will address claims 1, 11, and 16 together in the paragraphs below.

Sonos Ex 1003, p. 41
Sonos v. Google, IPR2023-00806

[1-p] "1. A method for commissioning a target device onto a communication network, comprising:"

[11-p] "11. A target device, comprising:"

[16-p] "16. A non-transitory computer readable storage medium storing one or more programs configured for execution by a target device for commissioning the target device onto a communication network,"

120. In my opinion, and to the extent the preambles of claims 1, 11, and 16 are limiting, this is all taught by Roberts.

121. Roberts explains that it relates to a system that operates to "establish[] communication" between a device and "a wireless network." (Ex. 1004, 1:12-14.)

122. More particular, in Roberts's system, "[a] wireless device that desires to be connected to a wireless network" (Roberts refers to this as "an 'enrollee' device") "is … provide[d] … with necessary configuration settings" "by a device that is already connected to the network" (Roberts refers this as "a 'registrar' device"). (*Id.*, 1:47-55.)

123. Roberts explains that stored programs or instructions—located on both the new device that seeks to join the network and the existing device already on the network—are executed to control this process and facilitate the addition of the enrollee device to the network. (*Id.*, 3:15-16, 57-60.) Thus, in my opinion, Roberts teaches a ***"non-transitory computer readable storage medium"*** with network commissioning ***"programs"*** that can be ***"execut[ed]."***

124. Figure 1—reproduced below—shows one such "network 11" that allows "several computers 10" to "communicat[e] with one another." (*Id.*, 3:34-40.)

125. Roberts explains that the network may be an 802.11-based "Wi-Fi Network." (*Id.*, 1:27-29, 60-65.) Similarly, Roberts explains that its system applies to "IEEE 802.11 technology." (*Id.*, 9:8-9.) At the time the '615 patent was filed, I note that 802.11 networks were well-known and in routine use.

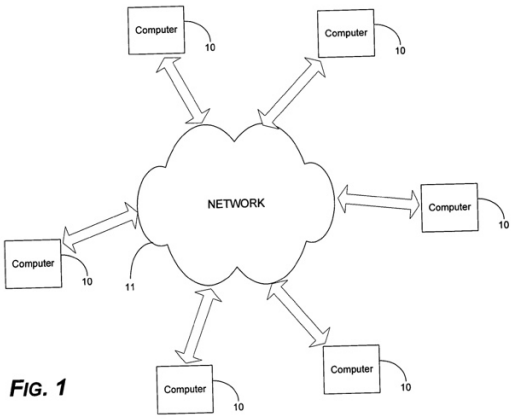

(*Id.*, Fig. 1.)

126. Again, Roberts shows numerous computers 10 communicating over a Wi-Fi network. A "registrar device 308" like a desktop computer is an example of one such "computer 10." (*Id.*, 4:51-57.) This registrar device is already part of a "wireless network 304" managed by "access point 306" and thus can send network configuration information to other devices. (*Id.*)

127. Another "computer 10," such as a "notebook computer 300" seeks to join this existing network. Because the notebook is not yet part of the network (it

needs to be commissioned with network settings first), Roberts refers to it as an "enrollee device." (*Id.*, 4:54-52.)

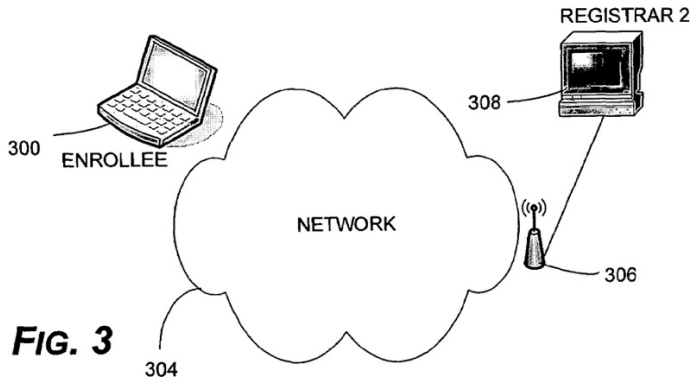

(*Id.*, Fig. 3.)

128. In my opinion, networks 11 and 304, which can both be standard 802.11 wireless networks managed by an access point, are examples of the claimed ***"communications network."***

129. Further, in my opinion, the new enrollee device like notebook 300 that seeks to join this existing wireless network is the claimed ***"target device."***

[1-1] "at the target device including a microprocessor, a wireless radio, and commissioning logic:"

[11-1] "a microprocessor; a wireless radio; a commissioning logic; and a memory storing programs for execution by the target device, the programs further including instructions for:"

[16-1] "the target device including a microprocessor, a wireless radio, and commissioning logic, the one or more programs comprising instructions for:"

130. In my opinion, Roberts teaches these limitations.

131. According to Roberts, Fig. 2, which I have reproduced below, provides an "example of a basic configuration for a computer 10." (Ex. 1004, 3:54-56.)

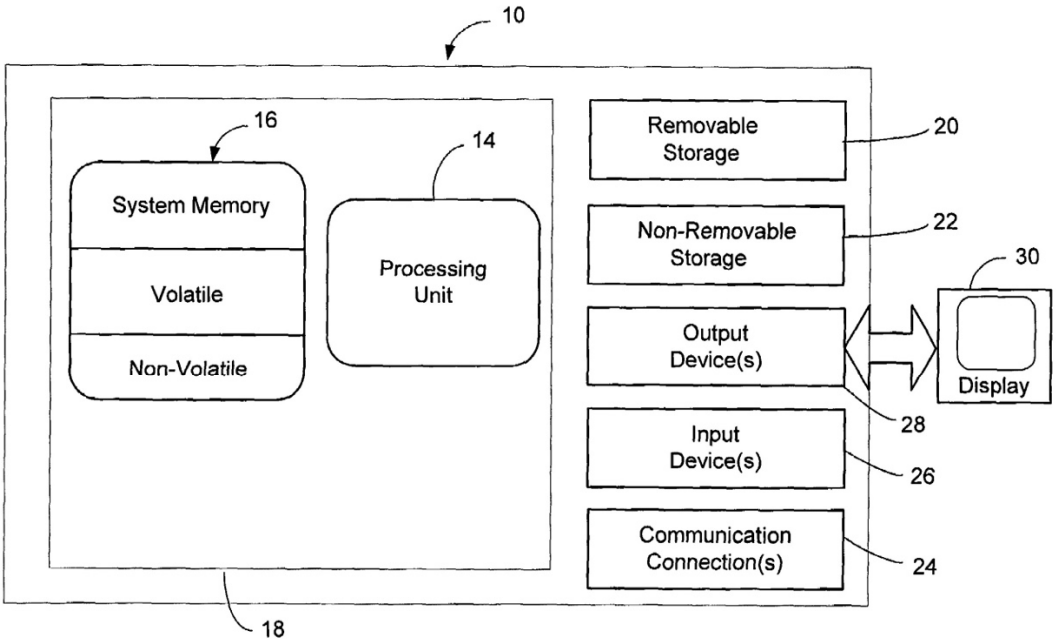

FIG. 2

(*Id.*, Fig. 2.)

132. Again, as I have explained ,the generic computer 10 shown in this figure can be either a "registrar device" (an existing device on Roberts's network) or an "enrollee device" (a device seeking to join the network). (*Id.*, 4:51-54.)

133. Thus, Figure 2 depicts and provides an example of the structure of Roberts's ***"target device"*** (the enrollee device like notebook 300 seeking to join the existing wireless network.)

134. Roberts explains that this device "typically includes at least one processing unit 14." (*Id.*, 3:54-58.)

135. Further, according to Roberts, the device also includes "memory 16" that can store "instructions" or "programs" that may be executed by the processing unit "to carry out tasks in accordance with various embodiments of the invention" such as the provision of configuration information. (*Id.*, 3:15-16, 3:57-60.)

136. Because of this, in my opinion, Roberts's "enrollee device" include both the claimed ***"microprocessor"*** (the processing unit 14) and ***"commissioning logic"*** with ***"programs"*** or ***"instructions"*** (the memory that stores the instructions and programs needed to engage in Roberts's commissioning process).

137. Next, while I recognize that Roberts does not use the term ***"wireless radio,"*** in my opinion a POSITA would have recognized that this component is inherently, or at least obviously present given Roberts's other teachings.

138. In particular, Roberts's devices can join and communicate over a "wireless" or "Wi-Fi network." (*Id.*, 1:27-29, 56-65; 3:41-46; 9:8-10.)

139. Devices that are able to communicate over a wireless network do so using a wireless radio. Put another way, a wireless radio is the hardware component that permits a device to engage in wireless communication. Thus, in my opinion, given that Roberts teaches devices that engage in Wi-Fi communication, a POSITA would have understood that those devices obviously include a ***"wireless radio"*** to engage in this communication.

140. Other portions of Robert confirm that this component is present. Indeed, a POSITA would have understood that this component must in fact be present for Roberts to operate in the way it describes.

141. In particular, Roberts explains that each device on its network includes "communication connection(s) 24 that allow the device to communicate with other devices." (*Id.*, 4:18-20.)

142. According to Roberts, this connection enables transmission and receipt of "a modulated data signal such as a carrier wave or other transport mechanism" over a "wireless network" via "RF" or other "wireless" means. (*Id.*, 4:21-32.)

143. These are all functions performed by standard, well-known wireless radios and their associated hardware.

144. The wireless radio permits a device to transmit (and receive) radio waves at particular frequencies for purposes of communicating.

145. Thus, not only does Roberts' reference to Wi-Fi network communication establish that its devices include a wireless radio, but its further discussion of its devices' ability to transmit and receive modulated data signals via RF confirms the presence of this component.

[1-2], [11-2], [16-2] "receiving a request to initiate a commissioning process with the target device;"

146. In my opinion, this is taught by Roberts.

147. Before discussing how Roberts teaches this limitation, I will briefly summarize how, in my opinion, it would be understood by a POSITA.

148. In particular, like all the limitations of claims 1, 11, and 16, each of which refers to steps performed by or functionality of a "target device," this step is one that is performed by or at the "target device."

149. But, the claim does not specify or limit how the "request to initiate" is received by the claimed device.

150. There is no requirement in the claims that the request be received via any particular manner of communication, or from any particular entity. Moreover, the claims allow the "request" to be "receiv[ed]" before a "short-range signal transmission path" is created. This, in my opinion, servers to further confirm that the claimed "request" does not need to originate from another device, let alone the claimed "wireless device." Because the "request" can be "receiv[ed]" first, the "target device" does not yet necessarily even have a path by which to communicate with the "wireless device" when the request is received. In such circumstances, the "request" cannot come from the "wireless device" and instead must be received, for example, via user input at the "target device."

151. Further, based on my review, no such limitation is imposed by the specification either. Instead, the '615 patent is open to and contemplates a variety of different ways to initiate commissioning.

152. For instance, the patent explains that "pushbutton switches" are one such example way to "initiate the exchange of configuration data." (Ex. 1001, 5:43-47.) Similarly, a "touchscreen … and display" can be used to "initiate execution of … program instructions" for commissioning. (*Id.*, 9:36-37.)

153. In such circumstances, the claimed "request to initiate" is the receipt of a pushbutton or touchscreen input at the target device that indicates that the user desires to begin the commissioning process. In my opinion, this is not the limit of the '615 patent's claims. Other analogous types of requests—including but not limited to other forms of user input at the target device—also fall within the claim scope.

154. In my opinion, Robert teaches what this limitation requires. Roberts discusses multiple ways by which a device user can initiate the network commissioning process for a new enrollee device.

155. For instance, according to Roberts, the process for "configuring" a new enrollee device can begin when "the power for the enrollee device 300 is turned on." (Ex. 1004, 5:44-48.)

156. Then, either "automatically" or after the device "user … initiate[s] the sequence," the "enrollee device 300 broadcasts information about itself and its capabilities" in the form of an "enrollee information element 514." (*Id.*, 5:48-53.)

157. Thus, here, Roberts contemplates at least two different inputs that correspond to the claimed ***"request to initiate a commissioning process."***

158. First, the user can initiate the process and trigger the transmission of element 514 by simply turning on the enrollee device. In such circumstances, the power on constitutes the "request to initiate." The instruction to power on is received at the enrollee device (Roberts' "target device") and results in initiation of the network commissioning process.

159. Second, Roberts explains that a separate user input can be provided at the enrollee device to initiate the sequence and trigger element 514 transmission. In such circumstances, the separate input received at the enrollee device (Roberts' "target device") that starts the network commissioning process would be the claimed "request to initiate."

160. In both cases, this "request" is ***"receiv[ed]"*** by the "target device."

161. More specifically, as I have explained, the enrollee device receives either (1) the power on input at the enrollee device from the user (which can automatically trigger the process) or (2) the separate user input at the enrollee device requesting initiation (which can also trigger the process).

162. Again, as I have noted, the '615 patent itself similarly explains that user activation of a switch or touchscreen can "initiate" a commissioning process. (*See* Ex. 1001, 5:43-47, 9:36-37.) Thus, Roberts teaches the same types of "request[s] to

initiate" a network commissioning process as the '615 patent itself. Even if this limitation did require that the claimed "request" come from the "wireless device," Roberts also renders this obvious. As I have explained, Roberts can set up a Bluetooth connection with the registrar device for purposes of receiving network configuration information. (Ex. 1004, 2:6-10.) As part of the Bluetooth connection setup process, "LMP_host_connection_req" and "LMP_accepted" messages are exchanged. (Ex. 1019, pp. 474, 628-629, 1131-1133.) Thus, Roberts' enrollee device will receive an "accepted" message from the registrar before engaging in further Bluetooth communications. This message is also the claimed "request": it allows the later request for and transmission of configuration information over Bluetooth to occur.

[1-3], [11-3], [16-3] "establishing a short-range signal transmission path with a wireless device independently of the communication network;"

163. In my opinion, this is rendered obvious by Roberts. While Roberts itself already teaches use of side-band channels such as Bluetooth when transmitting network information, if a separate motivation to use such a channel beyond what Roberts itself already provides is needed, this motivation is supplied by Asokan.

164. In Roberts's system, a new or enrollee device seeking to join an existing wireless network communicates with a "registrar" "device that is already connected to the network." (Ex. 1004, 1:52-55; *see also id.*, Abstract (discussing

communication with "registrar devices"); Fig. 5 (showing communication between an "enrollee device" and "registrar device").)

165. In my opinion, because the registrar is a device already on the wireless network to be joined, and because the registrar is responsible for sending network configuration data to the enrollee, it is the claimed ***"wireless device."***

166. The device will have the same type of hardware components as the enrollee device, including a wireless radio as I discuss above. Per Roberts, each of its devices—including both the enrollee and the registrar—have a structure like that of "computer 10" in Fig. 2. (*Id.*, 3:54-56.) Further, as I have explained, Roberts' network can be standard Wi-Fi network. (*See id.*, 1:27-29, 60-65; 9:8-9.)

167. Roberts also explains that as part of its process for configuring the enrollee device, a "connection" between the "enrollee" and "registrar" is created to facilitate the communication of "configuration information." (*Id.*, 2:6-10.)

168. More particularly, "the enrollee device … sets up control channels for communication." (*Id.*, 9:17-20.)

169. As part of this, a "probe request" is sent by an enrollee that "carr[ies] … capability information needed to establish direct communication between two wireless devices." (*Id.*, 9:42-45.)

170. Roberts also explains that the communication channel set up between the enrollee and registrar can be "a temporary direct data connection." (*Id.*; 7:43-52.)

171. In this regard, a dedicated "L2 data port" "control channel" is "open[ed] for only setup traffic" between the enrollee and registrar. (*Id.*, 11:18-21.) Similarly Roberts explains that "L2 data port" from the enrollee to the registrar is "opened for setup exchange." (*Id.*, 11:33-40, 62-65; 12:1-6.)

172. According to Roberts, employing this temporary direct connection "de-couples" the "setup exchange from the specific wireless technology" used by the network. (*Id.*, 11:19-22.)

173. Roberts also explains that either "in band" or "out of band" communication can be employed. (Ex. 1004, Abstract; 1:66-2:19; 6:26-28; 7:43-52.)

174. According to Roberts, one example of such "out of band" communication incudes "a Bluetooth™ connection." (*Id.*, 2:6-10.)

175. In my opinion, a separate out of band communication channel between the enrollee and registrar device—for example, a direct Bluetooth connection—is an example of the claimed ***"short-range signal transmission path"*** that is ***"independent[] of the communication network."***

176. Bluetooth is a short-range communication method, with a range of about 30 feet. Wi-Fi range is approximately 150 feet. Cellular communication range is on the order of 25 miles. Further, use of out of band Bluetooth (or another similar method of connection) is separate from and thus independent of the wireless network itself.

177. Because Roberts teaches both (1) use of out-of-band communication channels such as Bluetooth to transmit network information, and (2) the setting up of a separate, de-coupled channel of communication, in my opinion it teaches what this limitation requires.

178. Roberts does allow for the use of either in-band and out-of-band communication when commissioning a device. Regardless, because Roberts already references use of an out-of-band communication channel among a limited set of options, a POSITA would have considered use of such a channel and would have been motivated to employ this channel when implementing Roberts.

179. If, however, a separate motivation to employ Roberts' out-of-band channel instead of one of Roberts' other options would have been needed (again, it is my opinion that this would not have been required as Roberts already teaches the use of Bluetooth), this motivation is supplied by other art.

180. In particular, a POSITA would have considered it particularly obvious and would have been motivated to employ an out-of-band communication method in view of Asokan's teachings.

181. Asokan relates to "[m]ethods and systems for managing access to a wireless local area network." (Ex. 1006, Abstract; ¶ [0002].)

182. Asokan's system allows for the addition of a new device to an existing "high speed wireless LAN" (local area network). (*Id.*, ¶ [0023].) Asokan explains that this network can employ the 802.11 standard. (*See id.*, ¶ [0003].) Thus, like Roberts, Asokan teaches standard Wi-Fi networks.

183. Asokan explains that its system preferably employs "an out-of-band channel … to communicate authentication key and network address information to a …device" to be added to the network, "and utilizes [the] in-band channel" (*i.e.*, the wireless LAN) "to establish communications with the" device. (*Id.*, ¶ [0010].)

184. Further according to Asokan, this out-of-band channel can be based on "NFC, short range wireless communication, infrared, Bluetooth, UWB, WiFi, RFID, USB memory stick, etc." (*Id.*)

185. According to Asokan, use of this type "out-of-band channel" during network commissioning provides various benefits, including "increase[d]… security and usability." (*Id.*, ¶ [0010]; *see also* Abstract; ¶ [0025]; *see also infra* Section VIII.A.B.)

186. This, in my opinion, would have motivated a POSITA to employ an out-of-band communication method such as Bluetooth (rather than the WLAN network itself) when implementing Roberts' system for transmitting network configuration data.

[1-4], [11-4], [16-4] "in response to receiving the request, receiving one or more network configuration packets from the wireless device via the short-range signal transmission path, wherein the one or more network configuration packets convey network configuration data associated with the communication network according to a predetermined data format, the network configuration data including at least a security passphrase for accessing the communication network;"

187. In my opinion, this is taught by Roberts.

188. Again, in Roberts, the network configuration process can begin automatically when an enrollee device is powered on or when initiated by the device user via a separate user input. (*See* Ex. 1004, 5:44-53.)

189. Once the request to initiate is received from the user, the enrollee device transmits an "enrollee information element 514." (*Id.*, 5:48-50; Fig. 6.) According to Roberts, this transmitted "element 514" is then received by a "registrar" device. (*See id.*, 7:11-12.) Likewise, Roberts explains that the element 514 may be "directly" received by a registrar from the enrollee. (*Id.*, 7:25-29 (explaining that).)

190. Receipt of the information element 514 then causes the "registrar" to "provide[] … configuration information to the enrollee." (*Id.*, 7:31-33; *see also* 1:66-2:2 ("The information element is directly received" by "one or more potential

registrar devices. One of the registrar devices then provides the configuration information to the enrollee.”).)

191. Roberts explains that configuration information transmitted by the registrar can be sent to the enrollee “via the same channel through which the enrollee information element 514 was broadcast.” (*Id.*, 7:43-52.)

192. Again, as I have explained, in Roberts, the channel used to communicate network configuration information can include an “out of band” communication connection such as a “Bluetooth™ connection.” (*Id.*, 2:6-10; *see also id.*, Abstract; 6:23-27; 7:43-52.)

193. As I discuss above, a POSITA would have considered it obvious and would have been motivated to employ this type of connection not only because Roberts itself teaches it, but also because Asokan explains that an out-of-band channel should preferably be used for this purpose. (*See supra* discussion of limit [1-3].)

194. Next, Roberts explains that its system can transmit network configuration messages as “data packet[s].” (Ex. 1004, 12:28-29.)

195. In fact, Roberts repeatedly references the use of packets (or similarly frames) during the process of network configuration. For example, “media specific data frames” are employed during setup.” (*Id.*, 11:65-67.) Likewise, according to Roberts, “[t]he registrar device … transmits and receives setup frames … as L4/L3

packets." (*Id.*, 12:7-11.) And, "the 802.11 stack encapsulates the setup message from a registrar device … in an 802.11 data packet" for transmission to an "enrollee device." (*Id.*, 12:64-13:11).

196. Moreover, Roberts explains that the network configuration packets its system transmits can include various information fields, including a header and address "to ensure that the targeted enrollee device … directly receives the packet." (*Id.*, 13:2-11.)

197. In my opinion, because Roberts employs packets to facilitate commissioning, and because these packets have fixed formats with various required fields determined in advance (such as header and address fields), Roberts teaches the use of packets with a ***"predetermined data format"*** as claimed.

198. In my opinion, even if Roberts did not itself already teach the use of packets with predefined or predetermined formats, a POSITA would still have considered it obvious that packets of this type would be employed when transmitting messages back and forth between an enrollee and registrar, including when transmitting network configuration data.

199. As I have explained, in Roberts the enrollee and registrar can communicate via a "Bluetooth™ connection" during the network commissioning process. (*Id.*, 2:6-10.)

200. Bluetooth, as a POSITA would have recognized, employs a standardized "packet" format when transmitting messages. (*See, e.g.*, Ex. 1017, 2:15-17; 4:57-58; 5:59-61; Fig. 3.) Indeed, the Bluetooth standard itself sets forth a standardized "packet format" for use in Bluetooth transmissions. (*See, e.g.*, Ex. 1019 at pp. 459-460; *see also id.*, p. 125 ("Data is transmitted between Bluetooth devices in packets….").) This standardized packet includes a transaction ID (or "TID"), an "opcode," and then the message payload. (*Id.* at p. 214.) Further the packets can have a "fixed size." (*Id.*, p. 148.)

201. Again, the packet structure is standardized, determined, and fixed in advance and thus, in my opinion, has a ***"predetermined data format"*** as the '615 patent's claims require.

202. A POSITA would have understood Roberts to employ this standardized packet format, as all Bluetooth devices do, when engaging in Bluetooth communications for purposes of transmitting network configuration information.

203. Roberts also explains the type of network information that should be present in the packets it transmits.

204. In particular, Figure 8 of Roberts—which I have reproduced below—shows an example of the configuration information that can be conveyed to an enrollee in the packetized "registrar information element 518." (Ex. 1004, 7:30-35.)

205. As shown, the information includes the "wireless network name" and "encryption information … such as an encryption key" for the network. (*Id.*, 7:35-42.) Consistent with this, Roberts explains that "a Wi-Fi device needs … a service set identifier (SSID)" and "a cryptographic key" to "connect to a Wi-Fi network." (*Id.*, 1:29-32.) Thus, a POSITA would have understood that the network's SSID and key would be included as part of the transmitted packet.

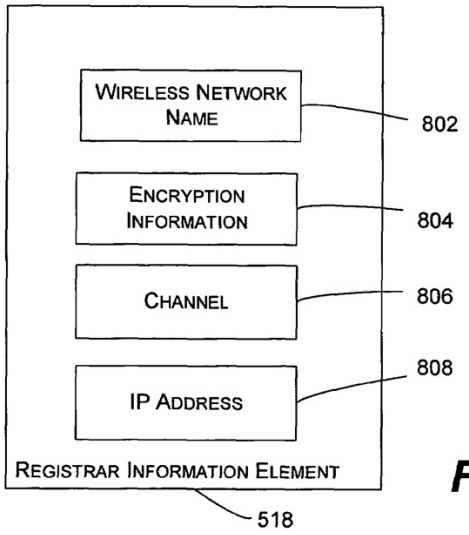

FIG. 8

(*Id.*, Fig. 8.)

206. Figures 5 and 6—which are reproduced and annotated below—show transmission of a packetized information element 518 from the registrar device to the enrollee device:

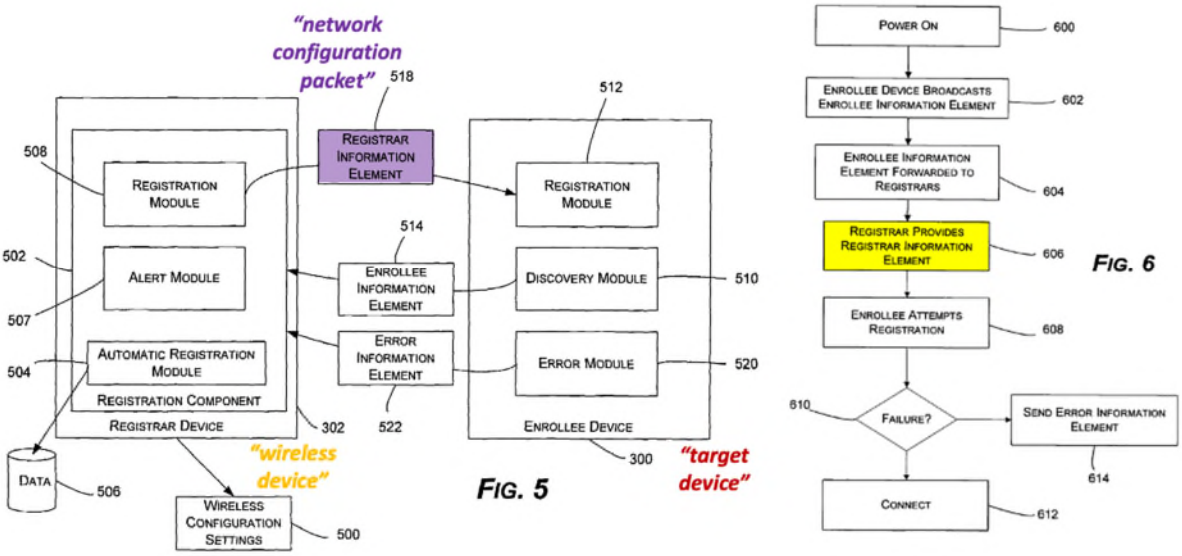

(*Id.*, Figs. 5, 6.)

207. Thus, in my opinion, in Roberts a ***"wireless device"*** (the registrar device) sends a ***"network configuration packet"*** (the packetized registrar information element 518) over ***"the short-range transmission path"*** (the Bluetooth or other out-of-band communication path) to a ***"target device"*** (the new enrollee device).

208. Again, the transmitted packet is in a ***"predetermined data format"*** (it can be a standardized data packet with a header, address, and other information) and includes at least a ***"security passphrase"*** (the network key).

[1-5], [11-5], [16-5] "executing an application on the target device to decode and process the one or more network configuration packets and recover the network configuration data; and"

209. This, in my opinion, is taught by Roberts.

210. According to Roberts, the process for configuring a new device for network access "may be implemented by programs that are executed" on the enrollee and registrar devices. (Ex. 1004, 3:15-16.) Similarly, Roberts explains that "a routine may be run to provide the device with necessary configuration settings" (*id.*, 1:47-52) and that each device "executes instructions to carry out tasks" required for network configuration (*id.*, 3:58-60.)

211. In my opinion, a POSITA would have understood that these programs, routines, or executed instructions would perform the "steps for discovering and configuring an enrollee device" shown in Figure 6. (*See id.*, 5:44-47.)

212. Thus, in my opinion, in Roberts the ***"target device"*** (the enrollee device seeking to join an existing Wi-Fi network) ***"execut[es] an application"*** (the programs, routines, or executed instructions) as required.

213. Further, Roberts explains that upon receipt of a packetized registrar information element 518, an enrollee extracts and uses "the configuration information within" the element for purposes of joining a network. (*Id.*, 8:39-43; Fig. 6.)

214. More particularly, the enrollee "receives the packet," "strips off the … header" and then "locally consumes the received packet" to facilitate completion of the network configuration process. (*Id.*, 13:16-24.)

215. Packets complying with other standards—such as Bluetooth—would be similarly processed upon receipt.

216. In particular, as I have explained, Bluetooth transmits data in the form of "packets" between devices. (*See, e.g.*, Ex. 1019, p. 125.) And, Bluetooth devices employ a "link controller" that is "responsible for the encoding and decoding of Bluetooth packets" that are to be sent and/or are received. (*Id.*, p. 143.)

217. Because the transmitted packetized element 518 is processed and information is extracted to configure the enrollee, in Roberts "***the target device"*** (the enrollee) ***"decode[s] and process[es]"*** packets for purposes of ***"recover[ing] the network configuration data"*** they contain.

[1-6], [11-6], [16-6] "after receiving the network configuration packets, employing via the wireless radio the network configuration data conveyed in the one or more network configuration packets to enable the target device to join the communication network."

218. In my opinion, this is taught by Roberts.

219. Roberts explains that its system operates to "provision[] a wireless network device with information needed to connect to a wireless network." (Ex. 1004, 4:38-42; *see also id.*, Abstract; 1:46-55.)

220. As part of this process, upon receipt of a "registrar information element 518"—which, as I explain above, can be a packet received over an out-of-band channel such as Bluetooth—an enrollee device "attempts registration with the

wireless network using the configuration information within the … element 518." (*Id.*, 8:39-45.)

221. This is shown below in Figure 6 of Roberts, which I have reproduced and highlighted below:

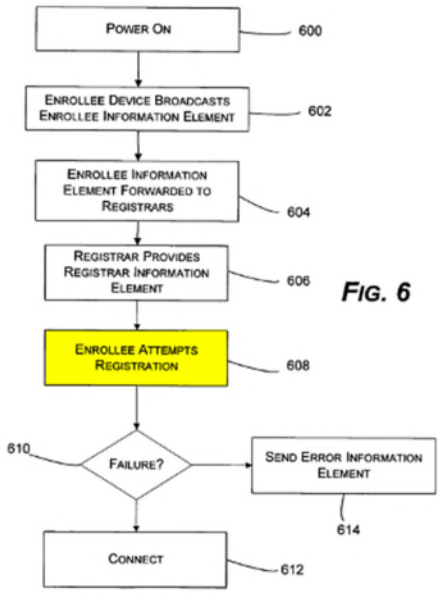

(*Id.*, Fig. 6 (annotated).)

222. If this process is successful, "Roberts explains that the enrollee device connects to the wireless network" (shown in step 612 in Fig. 6 above) for purposes of communication with other networked devices. (*Id.*, 8:43-46.) In other words, "[i]f the setup succeeds, … [t]hen the enrollee device … configures the 802.11 stack with an 802.11 profile and credentials to connect the enrollee device … as a member of the 802.11 network domain. The 802.11 stack uses the configured profile and credentials to connect to the 802.11 network domain." (*Id.*, 13:51-57.)

b. Claim 2

"2. The method of claim 1, wherein the wireless device is selected from a group consisting of a smartphone and a tablet computer."

223. As I explain above, Roberts (either alone or when considered in view of Asokan's teachings) renders claim 1 obvious.

224. In my opinion, the additional limitation required by this claim is also taught by Roberts.

225. Roberts explains that various different "computer[s]" can be connected to its network and serve as a registrar. (Ex. 1004, 3:21-29.)

226. According to Roberts, these "computers" with which its system can be used include "any device that electronically executes one or more programs" such as "personal computers (PCs), hand-held devices, multi-processor systems, microprocessor-based programmable consumer electronics, network PCs, minicomputers, mainframe computers, consumer electronics having a microprocessor or microcontroller, routers, gateways, hubs, or other electronic devices." (*Id.*)

227. Roberts does not specifically mention a ***"smartphone"*** or ***"tablet computer."*** Regardless, in my opinion, a POSITA would have considered use of these types of devices with its system to be highly obvious.

228. At the time the ’615 patent was filed, smartphones and tablets were well-known and in routine use. (*See, e.g.*, Ex. 1006, ¶ [0023] (known “[w]ireless devices” can include, among other things, “smart phones”).)

229. In view of their proliferation and widespread use, along with Roberts’s own disclosure that its teachings apply to and can be used with “hand-held devices” and various other computers, in my opinion a POSITA would have understood that Roberts’s registrar device could obviously be either a “smartphone” or “tablet computer.” There is no meaningful difference between such a device and those referenced in the passages from Roberts’ I quote above. And, a POSITA would have understood that a smartphone and tablet—just like the other devices discussed in Roberts—needs network configuration information before it can join an existing Wi-Fi network and thus benefits from Roberts’ system in the same way as any other device.

c. Claim 3

“3. The method of claim 1, wherein information received via the short-range signal transmission path is received at a first wireless radio of the target device, and the first wireless radio employs at least one of a plurality of radio modulation techniques including frequency shift keying (FSK), phase shift keying (PSK), on-off keying (OOK), and quadrature amplitude modulation (QAM).”

230. As I explain above, Roberts (either alone or when considered in view of Asokan’s teachings) renders claim 1 obvious.

231. In my opinion, the additional limitation of this claim is taught by Roberts and Asokan.

232. In particular, Roberts explains that its enrollee device—which is its ***"target device"***—may include various "communication connection(s) 24 that allow" it "to communicate with other devices." (Ex. 1004, 4:18-20.) This can include "out of band communications." (*Id.*, 2:6-10, 7:46-52, 10:8-9.)

233. Similarly, Asokan teaches that a device to be added to a network can employ hardware that communicates via such an "out-of-band channel." (Ex. 1006, ¶ [0010].)

234. In my opinion, this hardware that allows for communication via an out-of-band channel such as Bluetooth is the claimed "***first wireless radio of the target device."***

235. Moreover, Roberts explains that when adding new "enrollee" device to an existing network, a "connection" with a "registrar" is created to facilitate the communication of "configuration information." (Ex. 1004, 2:6-10; 7:43-52.) When Bluetooth is employed, this connection will be a Bluetooth connection.

236. Again, as I have explained, while Roberts itself already teaches the use of Bluetooth, Asokan confirms that an "out-of-band channel" should be used when communicating network configuration information.

237. Thus, Roberts and Asokan teach communications hardware, such as Bluetooth hardware, that allows ***"information"*** to be ***"received via the short-range signal transmission path."***

238. Next, both Roberts and Asokan explain that the out-of-band channel used to transmit network information can be a Bluetooth channel. (Ex. 1004, 2:6-10; Ex. 1006, ¶ [0010].)

239. In my opinion, a POSITA would have recognized that Bluetooth employs the types of modulation techniques this claim requires, including at least ***"frequency shift keying (FSK)"*** or ***"phase shift keying (PSK)."*** For instance, the Bluetooth standard discusses the use of "Gaussian Frequency Shift Keying" and both "quanternary" and "8-ary phase shift keying." (Ex. 1019, pp. 283, 286.)

240. The claimed modulation techniques are not specific or unique to the '615 patent. Instead, the '615 patent itself recognizes that they simply those used by "well-known communication protocols." (Ex. 1001, 10:1-6.)

241. Again, standardized Bluetooth transmissions employ either FSK or PSK modulation. (*See, e.g.*, Ex. 1017, 1:24-37; Ex. 1019, pp. 283, 286.)

d. Claim 5

"5. The method of claim 1, wherein the short-range signal transmission path is associated with a communication channel based on one of Bluetooth communication,

radio frequency identification (RFID), Zigbee, radio frequency for consumer electronics (RF4CE), Z-Wave, and near field communication."

242. As I explain above, Roberts (either alone or when considered in view of Asokan's teachings) renders claim 1 obvious

243. In my opinion, the additional limitation of this claim is rendered obvious by Roberts and Asokan.

244. Roberts explains that an "out of band" "connection," including a "Bluetooth" connection, can be used to transmit configuration information to an enrollee. (Ex. 1004, Abstract, 2:6-10, 6:23-27, 7:43-52.)

245. Asokan similarly teaches that an out-of-band channel such as Bluetooth can—and preferably is when possible—used for this purpose. (Ex. 1006, ¶ [0010].)

e. Claim 6

"6. The method of claim 1, further comprising: contacting the wireless device via the communication network to indicate that the target device has successfully entered the communication network."

246. As I explain above, Roberts (either alone or when considered in view of Asokan's teachings) renders claim 1 obvious.

247. In my opinion, the additional limitation of this claim is rendered obvious by Roberts and Asokan.

248. Roberts explains that if enrollee device "setup succeeds," then that device "deletes the L2 data port" it previously used to communicate with the registrar and reconfigures its "802.11 stack with an 802.11 profile and credentials to connect

the enrollee device … as a member of the 802.11 network domain." (Ex. 1004, 13:51-57.)

249. After this, the matching "L2 data port" "[o]n a registrar device" is also deleted. (*Id.*, 13:58-62.)

250. As can be seen, Roberts references a multi-step process: (i) the enrollee device joins the wireless network, (ii) the enrollee device closes the port used during network configuration information transmission, and finally (iii) the registrar device closes its matching port.

251. Because the enrollee deletes the L2 data port it used for setup upon joining a network, a POSITA would understand that any further messages or notifications sent to the registrar following port closure would be transmitted over the wireless network itself. This would include a notification sent by the enrollee to the registrar informing the registrar that enrollee setup was successful such that the registrar can delete its own matching L2 port. As explained above, per Roberts, this occurs after the enrollee has already joined the wireless network.

252. Roberts transmission of messages over the wireless network is also evidenced by other portions of Roberts's disclosure. For instance, Roberts explains that its system operates to "give[] system wide visibility into setup progress." (*Id.*, 11:32-33.)

253. In my opinion, a POSITA would have understood (or at least considered it obvious), that this would have included messages indicating that an enrollee device successfully joined a network as originally requested.

254. Again, as Roberts teaches that the communication channel used for configuration information transmission is shut down when the network is successfully joined, this type of message would also be transmitted via the wireless network itself.

f. Claim 7

"7. The method of claim 6, further comprising: after contacting the wireless device, continuing the commission process, including receiving, via the communication network, device configuration data from the wireless device."

255. As I explain above, Roberts and Asokan render claim 7 obvious.

256. In my opinion, the additional limitation of this claim is obvious in view of Roberts and Asokan.

257. As shown in Figure 4, which is reproduced below, Asokan teaches that a network configuration process employing an out-of-band channel can employ multiple steps:

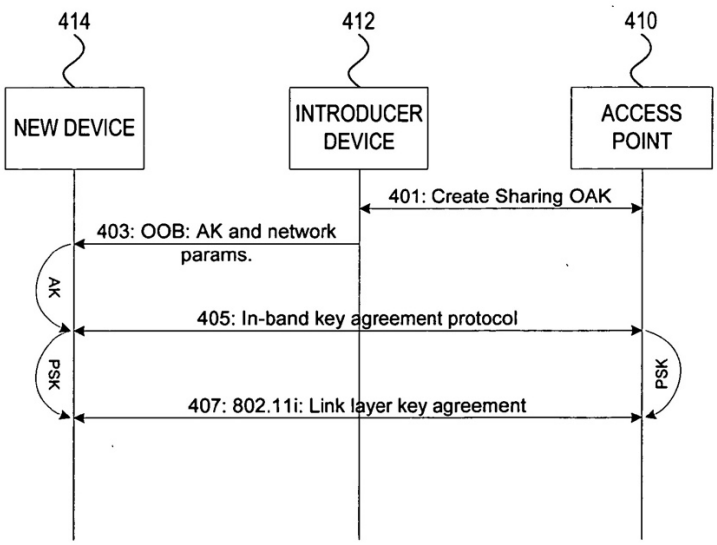

FIG. 4

(Ex. 1006, Fig. 4.)

258. As shown, a "new device 414" first receives a network "authentication key" (or "AK") and network parameters such as the "address of the AP" and the network "SSID" "via an out of band channel" from an "introducer device 412." (*Id.*, ¶ [0026].)

259. According to Asokan, "the introducer can be the AP itself." (*Id.*, ¶ [0005].)

260. Then, to complete the process, the "new device 414" uses the AK and network parameters to initiate further back-and-forth in-band communication over the 802.11-based WLAN with the "access point 410." (*Id.*, ¶¶ [0026]-[0027]; Fig. 4.) Similarly, Asokan explains that the "AK" is used to "authenticate" the new device and ensure it is permitted to communicate with the network. (*Id.*, ¶¶ [0011]-

[0013], [0052].) The "AK can be a "derived PSK," a "random passphrase," or other value. (*Id.*, ¶ [0057].)

261. The further communications permitted (and received at the device joining the network) after confirmation of the previously provided AK can entail transmission of a formal network "key for the new device" (also called a "PSK") and receipt of "link layer key agreement" communications. (*Id.*, ¶¶ [0026]-[0027]; Fig. 4; *see also* ¶ [0003] (explaining that WLAN networks are "protected with a … Pre-Shared Key (PSK)").)

262. Asokan explains that use of this multi-step procedure where an AK is transmitted first followed by a device specific PSK—instead of a more simplistic procedure where a generic network PSK is provided directly to the new device—allows for enhanced control over guest access. (*See id.*, ¶ [0010].)

263. In my opinion, these further in-band communications are the claimed ***"contin[ation of] the commission process"*** that entails ***"receiving, via the communication network, device configuration data from the wireless device."***

264. More particularly, the claimed "network configuration data" with a "security passphrase" required by claim 1 (*i.e.*, the network parameters and the AK Asokan originally transmits) are first received via the out-of-band channel.

265. Then, the further "device configuration data" required by claim 7 (the link layer communications and PSK that are transmitted after AK confirmation) are transmitted and received via WiFi.

266. This limitation is also, in my opinion, obvious for other reasons.

267. For instance, when the '615 patent was filed, "current technology normally uses DHCP (Dynamic Host Configuration Protocol) to implement high-efficiency dynamic IP address allocation." (Ex. 1018, 1:52-54.)

268. In a system employing DHCP, the network managing hub or "server automatically provides the client with an IP address and other Internet parameters." (*Id.*, 1:60-61.)

269. Moreover, the network hub/server not only engages in initial device registration, but also "[r]e-registration" when a client attempts to "re-register on the network" it has already joined. (*Id.*, 2:36-40.) This can entail providing the client with a "new IP address" if necessary. (*Id.*, 2:40-50.)

270. Again, in the prior art, the network's access point or hub can be the entity that transmits configuration information to a new client device. (*See, e.g.*, Ex. 1006, ¶ [0005].)

271. A POSITA would have understood that this device would also be (or at least could obviously be) the network's DHCP server responsible for client device IP address assignment, management, and re-assignment.

272. These IP address assignment messages are transmitted from the hub device to client devices via the wireless network itself.

273. The DHCP messages transmitting IP address information from the access point / hub to the client device—and in particular the re-registration messages transmitted after the client already joined the network—also constitute the claimed ***"device configuration data."*** They include network configuration information (assigned IP addresses) and are sent over the wireless network.

g. Claim 8

"8. The method of claim 7, wherein the device configuration data including at least one of an Internet Protocol address, proxy, and gateway configuration."

274. As I explain above, Roberts and Asokan render claim 7 obvious

275. In my opinion, the additional limitation required by this claim is taught by Roberts and Asokan.

276. In Roberts, the "registrar information element 518," transmitted to a new device as multiple packets, can include an "IP address 808." (Ex. 1004, 7:33-42.)

277. Further, in Asokan, initial out-of-band communications include only an AK, the address of the access point, and the SSID. (*See* Ex. 1006, ¶ [0026]; Fig. 4.) Because of this, and as I explain in greater detail when discussing claim 7 above, any other needed network configuration data are sent later over the wireless network

itself. (*See id.*) Such later transmissions over the wireless network would obviously include the IP address Roberts's system transmits.

278. Moreover, as explained above, a POSITA would also have understood that the network access point would transmit DHCP messages including IP address assignment information.

h. Claim 9

"9. The method of claim 1, further comprising: generating one of a visual indication and an audio indication to a user about a status of the commissioning process."

279. As I explain above, Roberts (either alone or when considered in view of Asokan's teachings) renders claim 1 obvious

280. In my opinion, the additional limitation required by this claim is taught by Roberts.

281. Roberts explains that displays can be provided to a user on both the enrollee and registrar device to provide the user with status information as part of its network configuration process. For instance, an "alert" can be "provided at a registrar device … upon receipt of an enrollee information element 514." (Ex. 1004, 8:13-15.)

282. As shown below in Figure 10 from Roberts, this can be a "bubble message 1000" that "indicates that an enrollee device … is requesting configuration information." (*Id.*, 8:25-30.)

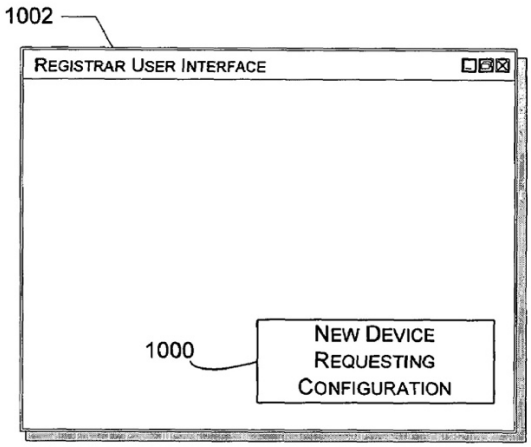

FIG. 10

(*Id.*, Fig. 10.)

283. The user may be required to "click or otherwise select the bubble" for the network configuration process to proceed. (*Id.*, 8:30-32; *see also* Figs. 9, 11; 8:34-38 (explaining that the enrollee device may display a PIN the user needs for the process to continue).)

284. Because the message alerts the user of the registrar device that the commissioning process has begun and requires user input to continue, it provides an ***"indication"*** regarding the ***"status of the commissioning process"*** as this particular claim limitation required.

i. Claim 10

"10. The method of claim 1, further comprising an application that includes a sequence of program instructions directed towards commissioning the target device onto the communication network."

285. In my opinion, this is taught by Roberts for the same reasons I discussed above for limitation [1-1]: Roberts employs a "program" or "instructions" executed on each enrollee device to perform network configuration.

j. Claim 12

"12. The target device of claim 11, further comprising an application that includes a sequence of program instructions directed towards commissioning the target device onto the communication network."

286. In my opinion, this is taught by Roberts for the same reasons I discussed above for claim 10.

k. Claim 15

"15. The target device of claim 11, wherein the communication network includes a wireless local area network (WLAN)."

287. As I explain above, Roberts (either alone or when considered in view of Asokan's teachings) renders claim 11 obvious

288. In my opinion, the additional limitation required by this claim is taught by Roberts.

289. In particular, in Roberts, the network joined by the enrollee can be an 802.11-based "Wi-Fi Network." (Ex. 1004, 1:27-29, 60-65; *see also id.*, 9:8-9.)

l. Claim 17

"17. The non-transitory computer readable storage medium of claim 16, wherein the one or more programs further comprise instructions for: generating one of a visual indication and an audio indication to a user about a status of the commissioning process."

290. In my opinion, this is taught by Roberts for the same reasons I discussed for claim 9.

m. Claim 18

"18. The non-transitory computer readable storage medium of claim 16, further comprising an application that includes a sequence of program instructions directed towards commissioning the target device onto the communication network."

291. In my opinion, this is taught by Roberts for the same reasons I discussed for claim 10.

n. Claim 19

"19. The non-transitory computer readable storage medium of claim 16, wherein the one or more programs further comprise instructions for: contacting the wireless device via the communication network to indicate that the target device has successfully entered the communication network."

292. In my opinion, this is taught by Roberts for the same reasons I discussed for claim 6.

2. Motivation to Combine

293. Again, as I have explained, Roberts itself teaches the use of an out-of-band channel such as Bluetooth to communicate network configuration information. Given that this teaching is already present, a POSITA would already have been motivated to employ Bluetooth when implementing Roberts.

294. If, however, additional motivation to use Bluetooth instead of a different communication method like the wireless network itself is for some reason required, Asokan provides this motivation.

295. In my opinion, a POSITA would have considered it obvious and would have been motivated to combine the teachings of Roberts and Asokan.

296. Asokan explains that employing only an "in-band" communication channel (i.e., the wireless network itself) when commissioning a new network device and providing it with required configuration information "present[s] a variety of problems." (Ex. 1006, ¶ [0006].)

297. For instance, it creates the "possibility of accidentally pairing with an unintended device and the threat of a man-in-the-middle attack." (*Id.*)

298. Further, "guest access is cumbersome…, and no device-to-device delegation of access rights is possible." (*Id.*)

299. Asokan then goes on to explain that its system overcomes these issues while at the same time providing a "simpler and more efficient wireless network setup and administration." (Ex. 1006, ¶ [0008].

300. In particular, "[t]he ability to use out-of-band where possible provides for an increase to security and usability…." (*Id.*, ¶ [0010]; *see also* Abstract; ¶ [0025].)

301. In my opinion, this would have provided a POSITA with a strong motivation employ a separate, out-of-band communication channel (like Bluetooth) when implementing Roberts's system.

302. Doing so would have simplified the configuration process and rendered it more user friendly.

303. For example, some systems that employ the wireless network communication for purposes of sending configuration information. In these systems, the user of the registrar device is often required to cause the device to leave the existing network and join a new, ad hoc wireless network for purposes of relaying network information to another device. This is often a confusing, not user-friendly, and disruptive process. The registrar device may at least temporarily lose access to the Internet. And, the need to switch could result in connection difficulties based on the device's settings.

304. These problems are avoided when using an out-of-band channel like Bluetooth is used. By using an out-of-band channel, the registrar device would be able to remain connected to the wireless network throughout the process.

305. Because less back-and-forth network switching would be required, a POSITA would have considered use of an out-of-band channel to result in a system that is more user friendly and easier to work with.

Sonos Ex 1003, p. 81
Sonos v. Google, IPR2023-00806

306. Next, a POSITA would also have been motivated to applying Asokan's teachings and implement Roberts such that it employs an out-of-band communication channel during network configuration because doing so would have improved the security of Roberts.

307. For instance, Bluetooth has a much shorter range than standard wireless transmissions. While a wireless network has a transmission range on the order of 100 feet, Bluetooth is limited to approximately 10 feet.

308. Thus, by using an out-of-band channel like Bluetooth instead of the wireless network itself, the transmission range of the network setup communications would be substantially reduced.

309. A POSITA would have understood that this shorter transmission range would have improved security by reducing the chance that network setup communications would be either inadvertently or intentionally intercepted by devices other than that the user seeks to add to the network. This would be particularly beneficial in a user's home. By using Bluetooth for network commissioning, the user would be able to better ensure that the commissioning messages do not travel outside the home where they could be intercepted by other parties.

310. A POSITA also would have recognized that Asokan's system also provides other benefits.

311. For example, Asokan explains that its system allows for "easy management of guest access." (Ex. 1006, ¶ [0010].)

312. To accomplish this, Asokan transmits different types of authentication keys to new devices. (*See id.*, ¶ [0028].) The access point can then revoke access to devices authenticated using a particular type of key, such as a "guest" key. (*See id.*)

313. A POSITA would have understood that this also would have improved Roberts.

314. Following Asokan, Roberts's network access point would be able to distinguish guest devices from other devices that are a permanent part of the network. Rather than transmitting the same key to all devices, specific keys could be sent to certain devices (like guest devices), to allow network access to be revoked at a later time. Guest network access could then be readily managed.

315. Next, as I have explained, Roberts already itself contemplates the use of out-of-band communication channels during new device commissioning. (*E.g.*, Ex. 1004, Abstract; 1:66-2:19; 6:26-28; 7:43-52.)

316. A POSITA would have considered the use of Asokan's other teachings with Roberts to be nothing more than a routine design choice. This includes Asokan's use of a multi-step configuration process.

317. I understand that when a patent simply arranges old elements with each performing the same function it had been known to perform and yields no more than one would expect from such an arrangement, the combination is obvious..

318. In my opinion, this is all the combination of Roberts and Asokan does here.

319. A POSITA would understand that the combined system would continue to operate as intended by allowing for the configuration of new devices seeking to join a network.

320. Further, it would provide the benefits of both Roberts and Asokan. In particular, network configuration would still occur at least in part via an out-of-band communication channel. But, now, additional security and guest management capabilities would be provided.

321. In my opinion, a POSITA would also have had a reasonable expectation of success when combining Roberts and Asokan.

322. Showing this, both Roberts and Asokan relate to methods and systems for managing access to a wireless network. (*E.g.*, Ex. 1004, 2:1-3; Ex. 1006, ¶ [0002].)

323. Further, both Roberts and Asokan discuss the use of out-of-band communication channels such as Bluetooth during network configuration. (*See, e.g.*, Ex. 1004, 1:66-2:19; 6:26-28; 7:43-52; Ex. 1006, ¶¶ [0010], [0026].)

324. In my opinion, this similarity in purpose and design would have given a POSITA every reason to believe that the references' teachings can be successfully combined.

C. Ground 2: Claims 1-3, 5-12, and 15-19 Are Obvious Over Suumäki

325. In my opinion, a POSITA would have considered Suumäki to be within the scope of the prior art and highly relevant to the patentability of the '615 patent's claims.

326. In my opinion, moreover, when viewed and considered in light of the knowledge possessed by a POSITA, Suumäki discloses all the limitations of and render claims 1-3, 5-12, and 15-19 of the '615 patent obvious.

327. In addition, not only would a POSITA have been motived to combine and collectively consider the teachings Suumäki to arrive at the subject matter claimed by the '615 patent, but they would have had a reasonable expectation of success when doing so.

1. Claim-by-Claim Analysis

a. Claims 1, 11, and 16

328. Again, claims 1, 11, and 16 are all independent. As I did when discussing Roberts and Asokan, I will address these claims together in the paragraphs below.

[1-p] "1. A method for commissioning a target device onto a communication network, comprising:"

[11-p] "11. A target device, comprising:"

[16-p] "16. A non-transitory computer readable storage medium storing one or more programs configured for execution by a target device for commissioning the target device onto a communication network,"

329. To the extent limiting, in my opinion this is all taught by Suumäki.

330. In particular, Suumäki relates to "wireless communication, and more particularly to connection setup … using an out-of-band carrier." (Ex. 1005, 1:9-11; *see also id.*, 2:7-10.)

331. Suumäki also references a variety of "wireless communication technologies," including an "IEEE 802.11 wireless local area network (WLAN)…." (*Id.*, 1:39-51.) Similarly, it explains that the employed "in-band communication connection parameters" can be "based on … IEEE 802.11 WLAN." (*Id.*, 3:32-40.)

332. Further, stored program logic or instructions are executed to control the network configuration process. (*Id.*, 24:43-49.) Thus, Suumäki employs ***"non-transitory computer readable storage medium storing one or more programs configured for execution."***

333. Figure 1B—which I have reproduced below—is an "example network diagram" where a "device A is shown as having joined a WLAN network by having formed an IEEE 802.11 in-band short-range carrier communication connection with

the hub device AP/GO," which can be "an access point device (AP) in an infrastructure network…." (*Id.*, 7:28-35; *see also id.*, 20:65-21:3.)

334. In my opinion, this WLAN network managed by the hub device is the claimed ***"communications network."***

335. Next, Suumäki's system and method is meant to commission other another device—"device B"—onto this existing network. (*See id.*, 7:20-8:9.)

336. "Device B" is an example of the claimed ***"target device."***

337. This is shown in the annotated version of Figure 1B below (note that to save space, I have removed the figure number):

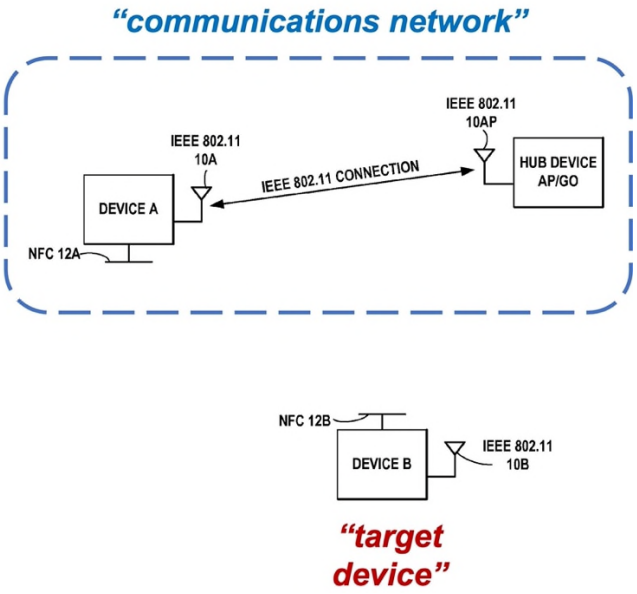

(Ex. 1005, Fig. 1B (annotated).)

[1-1] "at the target device including a microprocessor, a wireless radio, and commissioning logic:"

[11-1] "a microprocessor; a wireless radio; a commissioning logic; and a memory storing programs for execution by the target device, the programs further including instructions for:"

[16-1] "the target device including a microprocessor, a wireless radio, and commissioning logic, the one or more programs comprising instructions for:"

338. In my opinion, Suumäki teaches these similar limitations.

339. Suumäki explains that "device A" and "device B" in Figure 1B may be a "cellular telephone, PDA, laptop computer, and the like." (Ex. 1005, 20:50-64; 23:34-36.)

340. According to Suumäki, "FIG. 2" provides a "functional block diagram of device A and device B…." (*Id.*, 8:16-20; 23:22-23.)

341. As shown in this figure, which is reproduced below for reference, each device includes a "processor 20 that includes a dual core or multi-core central processing unit (CPU_1 and CPU_2)…." (*Id.*, 23:36-41.) This is the claimed ***"microprocessor."***

342. Next, each device also includes "one or more in-band short-range carrier transceivers, for example the in-band short range transceiver … 10B … that use[s] the IEEE 802.11 protocol." (*Id.*, 23:26-30.) This component "provide[s] the medium access control and radio for IEEE 802.11 WLAN communications." (*Id.*, 23:47-50.) This, in my opinion, is the claimed ***"wireless radio."***

343. Further, the devices include "a random access memory (RAM)," "a read only memory (ROM)," or another type of memory. (*Id.*, 23:39-41, 44-47.). According to Suumäki, regardless of its form, this memory includes "program logic stored … in the form of sequences of instructions, which, when executed in the CPU, carry out" Suumäki's connection setup method. (*Id.*, 24:43-49.) This is the claimed ***"commissioning logic."***

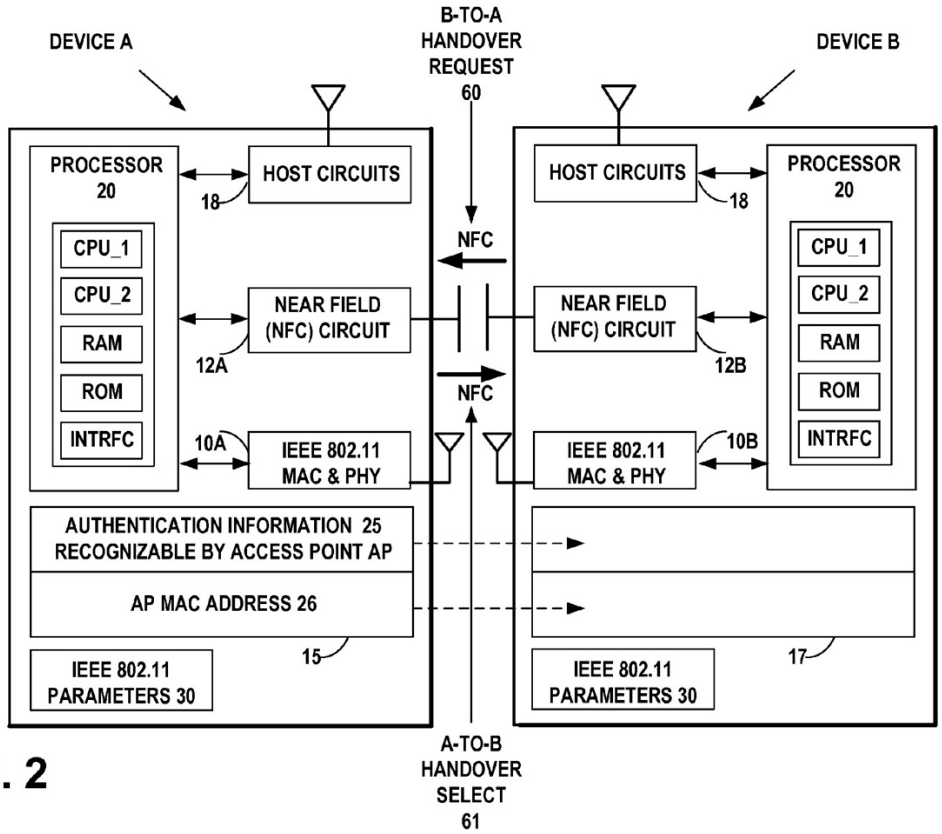

FIG. 2

(*Id.*, Fig. 2.)

[1-2], [11-2], [16-2] "receiving a request to initiate a commissioning process with the target device;"

344. Suumäki teaches that its system allows a "user … to have device B" (Suumäki's ***"target device"***) "to obtain network access through the hub device AP/GO and join the existing infrastructure network…." (Ex. 1005, 25:2-6.) In other words, "[t]he user of device A would like include device B in the WLAN network by having it automatically connect to the hub device AP/GO and acquire credentials for network access, without requiring the user to type in a PIN number." (*Id.*, 21:32-37.)

345. According to Suumäki, "[d]evice B may use the NFC Forum Connection Handover protocol to request from device A … information to enable device B to obtain network access through the hub device AP/GO." (*Id.*, 25:7-10.)

346. To allow for this, both device A and B are "equipped with an out-of-band NFC transceiver … using the Near Field Communication (NFC) protocol." (*Id.*, 23:22-25.)

347. Because the devices include NFC transceivers, "the user of device A" can "touch[] the NFC transponder of device A to the NFC transponder of device B in order to initiate a short-range carrier transport switch procedure with device B." (*Id.*, 21:37-44.)

348. Upon occurrence of this "NFC touch event," "device B send[s] an NFC handover request 60 … to device A…." (*Id.*, 21:45-50.) This "request 60"

constitutes a "request for information to enable device B to obtain network access through the hub device AP/GO." (*Id.*, 21:49-51; *see also* Fig. 1D-1E (depicting an "NFC TOUCH EVENT" and transmission of "NFC HANDOVER REQUEST 60" between devices A and B.)

349. In sum, Suumäki's system allows a user of a ***"target device"*** to ***"initiate"*** a wireless network ***"commissioning process"*** by performing an NFC touch event. This request is ***"received"*** at the target device because the user must physically perform an NFC touch event with that device to initiate the commissioning process.

350. As explained, in the '615 patent, user activation of a switch or touchscreen can similarly "initiate" a commissioning process. (See Ex. 1001, 5:43-47, 9:36-37.)

351. Further, user performance of an NFC touch changes the state of Suumäki's device B for purposes of activating the configuration procedure.

352. In particular, as explained in the NFC specification referenced by and incorporated into Suumäki (Ex. 1005, 19:3-35), when a NFC touch is performed, a handover selection procedure can be performed. Here, a "Handover Requester" (Suumäki's device B) is "the device that initiates the handover operation" while the "Handover Selector" (Suumäki's device A) is "the device that is initially passive and that responds to the Handover Requester." (Ex. 1020, p. 9.) Performance of an

"NFC touch" event "allows [these] two devices to" "exchange" messages and then later "data." (*Id.*) Further, as part of this process, messages are received from Suumäki's "wireless device" (the existing device on the network). As I have explained, Suumäki employs standardized NFC-transmissions. (See Ex. 1005, 19:20-48.) When engaging in such transmissions, a connection protocol is followed before exchange of handover request and select messages. (Ex. 1021 at 35-36.) Pursuant to this protocol, the initiating device sending a "CONNECT PDU" message and the touched device responding with a "CC PDU" message if the connection is accepted. (Id. at 19-20, 35-36.) These messages are exchanged as part of the NFC connection set-up process and before transmission of handover request and select messages. In my opinion, the "PDU" message received at Suumäki's device B (either message can be received depending on whether the device is the initiator) also constitutes a "request" as claimed because it is a necessary prerequisite to the later request for and transmission of network information via the handover request/select messages.

[1-3], [11-3], [16-3] "establishing a short-range signal transmission path with a wireless device independently of the communication network;"

353. This, in my opinion, is taught by Suumäki.

354. Again, Suumäki explains that both device A (an existing device on the network shown in Figure 1B) and device B (a device to be added to the network)

include "in-band short range transceiver[s] … that use of the IEEE 802.11 protocol." (Ex. 1005, 23:26-30.)

355. Suumäki's device A—which is already part of the wireless network—is an example of the claimed ***"wireless device."***

356. Further, in Suumäki, both devices A and B also include "out-of-band NFC transceiver[s]." (*Id.*, 23:23-25.) According to Suumäki, this allows device A to "transmit[s] NFC wireless out-of-band short-range carrier communication signals for providing an NFC out-of-band short range carrier communication connection with device B" after the occurrence of an "NFC touch" event. (*Id.*, 21:31-44.)

357. "Communication between two NFC-compatible devices occurs when they are brought within close proximity of each other. A simple wave or touch can establish an NFC connection…." (*Id.*, 18:67-19:3; *see also id.*, Figs. 1E-1F (depicting the passing of information back and forth between device A and device B over the touch-created NFC connection).)

358. In other words, "[w]hen the user brings the two NFC equipped devices A and B into close proximity, … they may establish an NFC communication link…." (*Id.*, 24:65-25:1.)

359. Suumäki also explains that the NFC-based communication link initiated by touching device A to device B is "out-of-band from the point of view of the in-band IEEE 802.11 protocol" used by the existing network. (*Id.*, 23:30-32.)

360. Moreover, Suumäki explains that NFC communication is an example of a "short-range communication technolog[y]." (*Id.*, 1:39-55.) This is because "NFC-compatible devices" are only able to communicate "when they are brought within close proximity of each other." (*Id.*, 1:62-65.)

361. Thus, because it is short-range and requires close physical proximity, the NFC communication link created by Suumäki between device A and device B for purposes of allowing device B to join another, existing network is the claimed ***"short-range signal transmission path."***

362. Further, because the NFC communication channel created between devices A and B is not the wireless network itself, it is ***"independent[] of the communication network"*** as the claims require.

363. This path is shown in the below annotated version of Figure 1D:

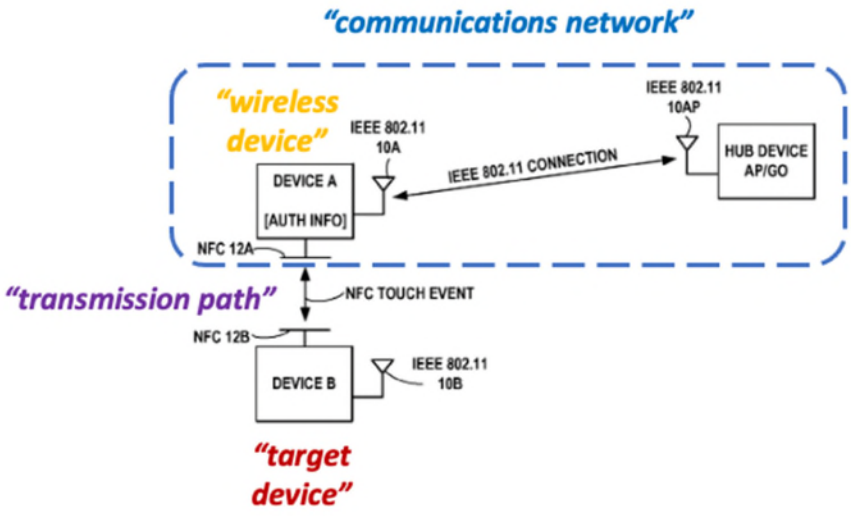

(*Id.*, Fig. 1D (annotated).)

[1-4], [11-4], [16-4] "in response to receiving the request, receiving one or more network configuration packets from the wireless device via the short-range signal transmission path, wherein the one or more network configuration packets convey network configuration data associated with the communication network according to a predetermined data format, the network configuration data including at least a security passphrase for accessing the communication network;"

364. This, in my opinion, is taught by Suumäki.

365. Suumäki explains that the purpose of its system and method is to "enable connection setup … using" an "out-of-band carrier." (Ex. 1005, 2:7-9.)

366. To accomplish this, Suumäki allows device B to be "automatically connect[ed] to the hub device AP/GO" managing an existing IEEE 802.11 wireless network "and acquire credentials for network access, without requiring the user to type in a PIN number." (*Id.*, 21:32-37.) In other words, Suumäki's system "enable[s] device B to obtain network access through the hub device AP/GO and join the existing infrastructure network…." (*Id.*, 25:2-6.)

367. To transmit these network credentials, Suumäki explains that after performance of an NFC touch event, the associated formation of an NFC communications link, and the transmission of a "NFC handover request 60" from device B to device A, device A responds to device B with a "handover response select message 61" that includes "authentication information 25 and connection information, such as the MAC address 26 of the hub device AP/GO, to carry out a connection setup between device B and the hub device AP/GO." (*Id.*, 21:52-59.)

368. "FIG. 3B"—which I have reproduced below for reference—"is one example embodiment of an NFC handover select message 61" sent by device A (Suumäki's ***"wireless device"***) to device B (Suumäki's ***"target device"***). (*Id.*, 25:60-61.)

FIG. 3B

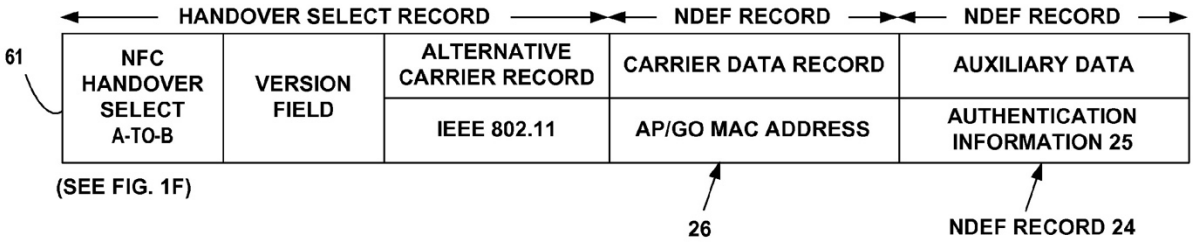

(*Id.*, Fig. 3B.)

369. According to Suumäki, this message transmitted over the NFC link is in the form of an "NDEF message" comprised of a number of "NDEF record[s]." (*See id.*, 25:34-42, 60-64; *see also id.*, 20:24-25 ("A NDEF message is constructed of a number of NDEF records").

370. Moreover, the message is formatted in accordance with the "NFC Data Exchange Format (NDEF) specification," which "defines a common data format for NFC devices to exchange application or service specific data." (*Id.*, 20:20-24.)

371. In addition to detailing its format, Suumäki also discusses content of message 61 at length.

372. For instance, the message includes "authentication information 25" such as "a random number of a value based on public key encryption" that is

"recognizable by the hub device" and "serve[s] as proof" that device B properly requested network access. (*See id.*, 21:60-67; *see also id.*, 26:3-11.) According to Suumäki, various other types of authentication information can be included in the message, including "temporary network keys" that are "valid only [for] certain time[s]." (*Id.*, 24:64-25:24.)

373. Suumäki also includes other examples of the "authentication information 25 carried in the NDEF record of the NFC handover select message 61." (*Id.*, 26:12-16.)

374. The message's authentication information can includes the "SSID of [the] network" to be joined, the "Network type," the "MAC address of the AP/GO," the network "[c]hannel," the network's "[s]upported WPS methods," and "other AP/GO device identity information." (*Id.*, 26:17-46.) Likewise, the message can include "MAC address of the AP/GO, Network Name, Channel etc." (*Id.*, 29:62-64.)

375. The message can also include further "connectivity settings." (*Id.*, 25:64-67.) For instance, the message sent from device A to device B includes "in-band communication connection parameters for enabling" device B "to join the wireless network and authentication information recognizable by … an access point." (*Id.*, 28:35-42.)

376. In yet another example, Suumäki explains that the "NFC [h]andover [s]elect [m]essage" can be a "configuration record that" "includes credentials, such

as network index, SSID, authentication type, encryption type, [and] network key… (Ex. 1005, 20:13-19.) Likewise, Suumäki explains that the "NFC handover select message sent from device A to device B … provide[s] connectively settings and the authentication information recognizable by the hub device AP/GO." (*Id.*, 8:27-29; *see also id.*, 19:55-62 ("The wireless LAN parameters and credentials information provided inside a WPS Record includes the IEEE 802.11 Service Set Identifier (SSID), authentication and encryption type deployed by the wireless network, the secret network key that a wireless station needs to authenticate with the network.")

377. The handover select message transmitted from device A to device B in Suumäki is analogous to that transmitted in the '615 patent's own example.

378. In particular, the '615 patent explains that "an exemplary commissioning packet … includes a preamble field…, a header field…, a service set identifier (SSID) field…, a key field…, and a cyclic redundancy check (CRC) field…." (Ex. 1001, 11:22-27.)

379. Suumäki explains that including this information in the message 61 allows device B to communicate with the hub for purposes of obtaining network access. (*See id.*, 22:10-35.)

380. In summary, in Suumäki the message 61 sent by device A to device B "***convey[s] network configuration data associated with the communication network.***" As explained above, the message can relay at least the network's SSID,

channel, hub MAC address, and employed WPS method to device B. The message can also include the network authentication type, encryption type, and key. All of these are examples of "network configuration data" for Suumäki's wireless network.

381. The message also employs a ***"predetermined data format."*** As explained, message 61 is formatted as an NFC-standard based NDEF message comprised of NDEF records.

382. Moreover, the message includes ***"at least a security passphrase for accessing the communication network."*** This includes a random number or public key encryption recognizable by the hub, a temporary network key, or even in certain of Suumäk's embodiments, the permanent network key itself.

383. Suumäki does not explicitly refer to the NFC-based messages its system transmits as ***"packets."***

384. Regardless, in my opinion a POSITA would nonetheless consider it obvious that the messages would have been in this form.

385. As I have explained, the network configuration data Suumäki transmits from device A to device B over an NFC communication link in a NDEF "handover response select message 61." (*See* Ex. 1005, 21:52-59.)

386. Further, Suumäki explains that this messasge 61 is formed from a series of "NDEF record[s]" surrounded by "begin and end markers." (*Id.*, 20:24-31; 25:34-

42, 60-64; *see also id.*, Fig. 3B (showing message 61 as including multiple "NDEF record[s]").

387. In my opinion, a POSITA would understand the term "packet" to refer simply to "[a] unit of information transmitted as a whole from one device to another on a network." (Ex. 1007, p. 385.)

388. This is what the NDEF records are. Each such record includes a unit of information that when combined, form a complete message.

389. For instance, in Figure 3B of Suumäki, one NDEF record includes the "AP/GO MAC address" and the next record includes the "authentication information 25." (*See* Ex. 1005, Fig. 3B.) The records together collectively include the set of configuration information needed by device B to communicate with the wireless network.

390. Further, I note that Suumäki "incorporate[s] … by reference" "[t]he NFC Data Exchange Format (NDEF) specification," which "defines common data format for NFC devices to exchange application or service specific data." (*Id.*, 20:20-24.)

391. While I understand that this incorporation makes the specification part of Suumäki, even if this were not the case, in my opinion the specification would be part of the background knowledge of a POSITA would and inform a POSITA's

understanding of Suumäki's teachings. A POSITA would have been aware of the specification and would have interpreted Suumäki in view of the specification.

392. This NDEF specification "defines a message encapsulation format to exchange information, e.g. between" two NFC devices. (Ex. 1008 at 1.) "NDEF is a lightweight, binary message format that can be used to encapsulate one or more application-defined payloads of arbitrary type and size into a single message construct." (*Id.*)

393. Like Suumäki, the specification explains that an "NDEF message contains one or more NDEF records." (*Id.* at 5.) The specification also includes a depiction of an "NDEF [m]essage with a [s]et of [r]ecords." (*Id.* at 8.)

394. Each record employs a "common format." (*Id.*at 14.) The record starts with flags, such as a "Message Begin" flag to indicate the "start of an NDEF message," a "Message End" flag to indicate the "end of an NDEF message," or a "Chunk Flag" indicating that the record is part of a chunk (*i.e.*, a portion of a larger piece of data). (*Id.* at 8-9, 14.) Then, the record includes fields indicating the record length, type, identification, and payload. (*See id.* at 15-18.)

395. The below figure provides an example of this format:

Sonos Ex 1003, p. 101
Sonos v. Google, IPR2023-00806

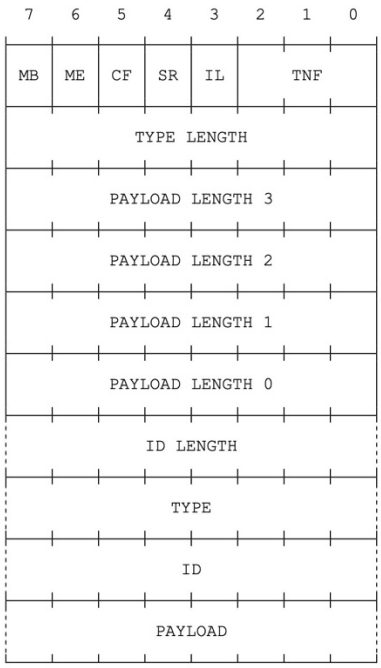

Figure 3. NDEF Record Layout

(*Id.* at 14.)

396. In my opinion, this is no different than the ’615 patent’s example “packet.”

397. The ’615 patent’s packet, like the NDEF record from the NDEF specification shown above, includes various “fields.” This including a “header” that “may be employed as a start frame deliver” and identifies the “message type,” along with various other pieces of information and the message data. (*See* Ex. 1001, 11:22-37; Fig. 8.) The NDEF record similarly includes an identifying header, other identifying information, and message data.

398. Other prior art confirms that the messages transmitted between NFC devices would be considered by a POSITA to be a “packet.”

399. For instance, one reference explains that "[a] packet in … NFC communication has a unit called an NDEF record…." (Ex. 1010, 11:60-65.) Another reference discussing "near field communication" "packets" at length. (Ex. 1009, Abstract.)

[1-5], [11-5], [16-5] "executing an application on the target device to decode and process the one or more network configuration packets and recover the network configuration data; and"

400. This, in my opinion, is taught by Suumäki.

401. Suumäki explains that "[a]lso included in the memory of device A and device B are programmed instructions of the NFC Connection Handover protocol. … The programmed instructions may be implements as software…." (Ex. 1005, 24:33-38.).

402. This "NFC Connection Handover program" "carr[ies] out the functions of the disclosed embodiments" "when executed in the CPU." (*Id.*, 24:45-49.) In other words, "wireless device B" includes "computer code instructions" that can be "executed" to perform Suumäki's network joining process. (*Id.*, 28:51-59.)

403. Because Suumäki's devices include programs and code that is executed for purposes of allowing a device to be network configured, Suumäki ***"execut[es] an application on the target device"*** as required.

404. Suumäki also explains that upon receipt of message 61, the "NFC Connection Handover program" running on device B uses the "connection

parameters" in the message "to setup an IEEE 802.11 in-band short-range carrier communication connection with the hub device…." (*Id.*, 22:1-13.) Thus, "[a]fter the NFC touch procedure, device B possesses the authentication information 25 recognizable by the hub device AP/GO, in its input/output buffer 17…." (*Id.*, 27:17-21).

405. Because the parameters are extracted and used by device B for purposes of setting up a network connection, in my opinion, a POSITA would have understood that Suumäki ***"decode[s] and process[es] the one or more network configuration packets and recover the network configuration data"*** as required.

406. The NDEF specification confirms that a NDEF handover select message is "decode[d]" and "process[ed]" upon receipt.

407. In particular, the specification explains that after a "NDEF message is transmitted across an NFC link to another" device, it is "parsed" by an "NDEF parser" on the device that "deconstructs the NDEF message and hands the payloads to a … user application." (Ex. 1008 at 7.)

408. In my opinion, a POSITA would have understood that Suumäki operates in the same way.

409. Upon receipt of message 61 at device B, the application running on device B will parse the message, extract the network configuration information it contains, and use that information to establish a connection with the network hub.

This process, in my opinion, constitutes "decod[ing]" and "process[ing]" as this limitation requires.

[1-6], [11-6], [16-6] "after receiving the network configuration packets, employing via the wireless radio the network configuration data conveyed in the one or more network configuration packets to enable the target device to join the communication network."

410. This, in my opinion, is taught by Suumäki.

411. In Suumäki, device B includes "one or more in-band short-range carrier transceivers" that allow it to engage in "IEEE 802.11 WLAN communications." (Ex. 1005, 23:26-30, 47-50.)

412. When device B receives a NFC handover select message 61, it decodes and processes that message, extracts the network authentication and connection information it contains, and then uses that information "to setup an IEEE 802.11 in-band short-range carrier communication connection with the hub device" using the device's in-band transceiver. (*Id.*, 22:1-13; *see also id.*, 27:17-21.)

413. This is shown by, for example, Figure 1G of Suumäki. Here, "device B" uses its "IEEE 802.11" transceiver to wirelessly communicate with "hub device AP/GO":

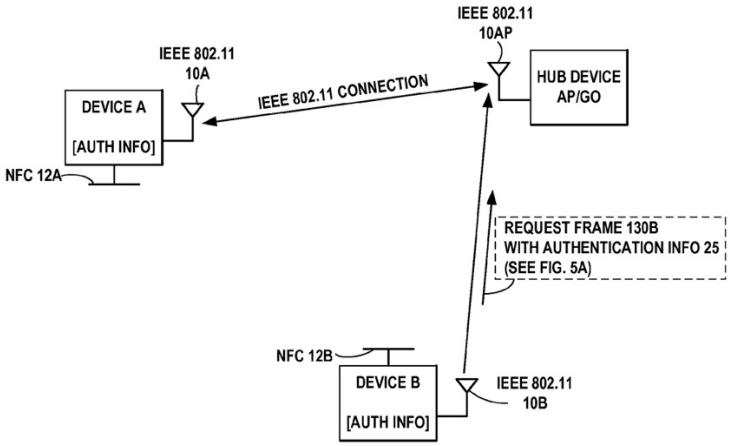

(*Id.*, Fig. 1G.)

414. Again, the purpose of this in-band communication is to enable the connection of device B to the existing IEEE 802.11 network and "acquire credentials for network access, without requiring the user to type in a PIN number." (*Id.*, 21:32-37; *see also id.*, 27:51-54.)

415. As part of this process, "authentication information" in the message 61 is relayed to the hub using the in-band transceiver as "proof that the device B did, in fact engage in an NFC touch with device A." (*Id.*, 21:60-67.)

416. Figure 7, reproduced below, provides an overview of Suumäki's complete process:

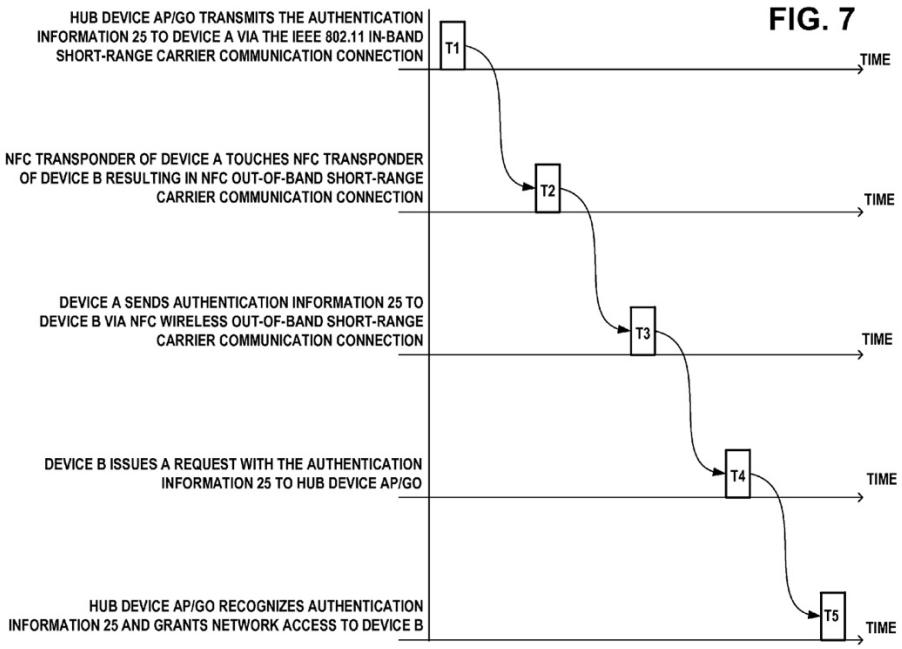

(*Id.*, Fig. 7.)

417. As this figure shows, after receiving "authentication information 25" from device A over the NFC "communication connection," device B "issues a request with the information 25 to hub device AP/GO." (*Id.*)

418. Then, if the "hub device … recognizes" the "authentication information 25," it "grants network access to device B" in a final step. (*Id.*) In other words, after communicating with and relaying "authentication information 25" to the hub, device B is provided with "network credentials for the network." (*Id.*, 22:21-38.) This in turn finally allows device B to be "connected to the network with its new configuration" such that it can "communicate with device A over the network, through the hub device." (*Id.*, 22:39-45.)

419. The successful addition of device B to the existing wireless network is shown in Figure 1I, which is reproduced below:

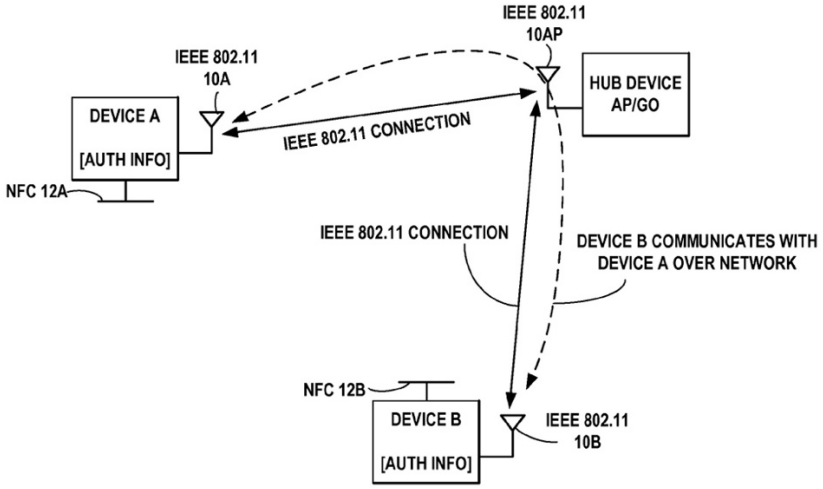

FIG. 1I

(*Id.*, Fig. 1I.)

420. SO, in sum and as I have explained above, device B in Suumäki uses the ***"network configuration data"*** it received over the NFC communication channel (the message 61) to engage in ***"wireless"*** communication (the communication with the hub device AP/GO) for purposes of ***"enabl[ing] the target device"*** (again, device B) ***"to join the communication network"*** (completing the process of obtaining the required network credentials for device B so as to allow it to fully participate in the existing wireless network).

b. Claim 2

"2. The method of claim 1, wherein the wireless device is selected from a group consisting of a smartphone and a tablet computer."

421. As I explain above, Suumäki renders claim 1 obvious.

422. In my opinion, Suumäki also teaches this claim's additional limitation.

423. According to Suumäki, device A (which is Suumäki's ***"wireless device"***) can be a "cellular telephone, PDA, laptop computer," "palmtop computer," "and the like." (Ex. 1005, 20:51-54, 23:32-36.)

424. At the time the '615 patent was filed, a POSITA would have recognized and known that both smartphones and tablet computers were well known and in routine use. Further, smartphones and tablet computers woud have been considered examples of the "telephone[s]" and "PDA[s]" Suumäki references.

425. For instance, references available at the time the '615 patent was filed explain that "device[s] capable of performing wireless communications"—including both 802.11 and NFC-based communications—include "a smart phone …, a personal computer, a laptop, a wireless-capable media device …" and "a tablet device." (Ex. 1011, ¶¶ [0031], [0041].)

426. Given that smartphones and tablets were known and in routine use, in my opinion a POSITA would have immediately recognized and considered it highly obvious that Suumäki's reference to telephones, PDAs, laptops, and palmtops extends to also embraces such devices.

427. Moreover, a POSITA would have recognized that Suumäki's system is applicable and can be used with smartphones and tablets when those devices seek to

join an existing wireless network, just as it can with the other types of devices Suumäki mentions.

c. Claim 3

"3. The method of claim 1, wherein information received via the short-range signal transmission path is received at a first wireless radio of the target device, and the first wireless radio employs at least one of a plurality of radio modulation techniques including frequency shift keying (FSK), phase shift keying (PSK), on-off keying (OOK), and quadrature amplitude modulation (QAM)."

428. As I explain above, Suumäki renders claim 1 obvious.

429. In my opinion, Suumäki also teaches this claim's additional limitation.

430. Suumäki explains that its device B (its ***"target device"***) is "equipped with an out-of-band NFC transceiver … using the Near Field Communication (NFC) protocol." (Ex. 1005, 23:22-25; *see also* Fig. 1 (showing device B with both an IEEE 802.11 transceiver 10B and a NFC transceiver 12B)*;* Fig. 2 (similar).)

431. In my opinion, this NFC transceiver is the claimed "***first wireless radio of the target device."*** The NFC transceiver allows device B to engage in short-range NFC communication with another device.

432. As I explained in greater detail when discussing claim 1, Suumäki also explains that upon occurrence of an NFC touch event between devices A and B, an "NFC communication link" is created allowing for the transmission of information back and forth between devices A and B. (Ex. 1005, 24:65-25:1; *see also id.*, 18:67-19:3; 21:31-44; Fig. 1D.)

433. Thus, Suumäki's NFC transceiver allows ***"information"*** to be ***"received via the short-range signal transmission path."*** Device A sends information (including network configuration information) to device B over the created NFC link.

434. Next, Suumäki also explains that "[t]he ISO/IEC 18092 standard specifies modulation schemes, codings, transfer speeds and frame format" employed during NFC communication. (Ex. 1005, 19:39-45.)

435. This standard is later incorporated by reference by Suumäki. (*See id.*, 33:58-61.)

436. The ISO/IEC 18092 standard explains that NFC devices employ various "modulation schemes" when communicating. (Ex. 1012 at 6.)

437. In particular, both a sending and receiving device "shall use the modulation principle of ASK 100% of the RF operating field to create a 'Pulse'…." (*Id.* at 7.)

438. In my opinion, a POSITA would consider this reference to ASK modulation to embrace ***"on-off keying (OOK),"*** one of the permitted modulation techniques identified by this claim.

439. ASK, or amplitude-shift keying, modulation is a form of signal amplitude modulation. When this form of modulation is employed, digital data (*i.e.*, a series of 0s and 1s) is represented via variations in the amplitude of a transmitted

carrier wave. One wave amplitude represents a 0, while another amplitude can represent a 1.

440. There are multiple ways to engage in ASK modulation. OOK, or on-off keying, modulation is one such way. In the OOK version of ASK modulation, the transmitted carrier wave simply varies between an on and off state (with one state representing a 0 and the other state referencing a 1).

441. Put another way, "[t]he simplest form of ASK for binary data communication is on-off keying (OOK), where a value of '1' is represented by the presence of a carrier, and a value of '0' is represented by its absence, or vice versa." (Ex. 1013, 10:38-40.)

442. Thus, by teaching ASK modulation, Suumäki also teaches the use of the simplest form of ASK modulation: OOK modulation.

443. In my opinion, even if Suumäki had not incorporated the ISO/IEC 18092 standard, a POSITA would have considered it highly obvious to employ it.

444. Not only does Suumäki explains that this standard sets forth a "protocol" for "data exchange," but it also notes that its use is "required for data collision control." (Ex. 1005, 19:43-48.)

445. In my opinion, this would have provided a strong motivation for the use of the standard when implementing Suumäki's system and method. In fact, a POSITA would have considered use of the standard necessary to ensure that devices

using Suumäki's methods are able to properly communicate with other NFC-enabled devices.

d. Claim 5

"5. The method of claim 1, wherein the short-range signal transmission path is associated with a communication channel based on one of Bluetooth communication, radio frequency identification (RFID), Zigbee, radio frequency for consumer electronics (RF4CE), Z-Wave, and near field communication."

446. As I explain above, Suumäki renders claim 1 obvious.

447. In my opinion, Suumäki also teaches this claim's additional limitation.

448. In particular, Suumäki explains that the "wireless out-of-band carrier" used to transmit network connection information from device A to device B "is one of Near Field Communication" or "Radio Frequency Identification." (Ex. 1005, 3:27-31; *see also id.*, 21:40-44 ("NFC wireless out-of-band short-range carrier communication signals" are used "for providing an NFC out-of-band short-range carrier communication connection with device B").)

e. Claim 6

"6. The method of claim 1, further comprising: contacting the wireless device via the communication network to indicate that the target device has successfully entered the communication network."

449. As I explain above, Suumäki renders claim 1 obvious.

450. In my opinion, Suumäki also teaches this claim's additional limitation.

451. Suumäki does include an example where device A sends network configuration information to device B.

452. However, it also teaches that "[d]evice A, device B, and hub device AP/GO may have the same or similar components." (Ex. 1005, 24:63-64.)

453. Thus, in "example embodiments of the invention, hub device AP/GO may also be equipped with an out-of-band NFC transceiver and an implementation supporting the Near Field Communication (NFC) protocol." (*Id.*, 24:39-42.)

454. Because the hub device itself includes NFC capabilities, in my opinion a POSITA would have understood that the process of adding device B to an existing network could be initiated by performing a touch event between device B and the hub.

455. Indeed, Suumäki itself explains that "the user" may "bring[] the NFC radio on the device close to an access point (AP) … to allow near field communication." (*Id.*, 19:15-19.)

456. When an NFC touch is performed between device B and the hub, it is the hub—and not device A—that would use the created NFC communication link to transmit the "NFC handover select message 61" including communications and authentication information to device B.

457. This message would be transmitted in the same way and would include the same types of information I discuss above in connection with claim 1.

458. After performance of this NFC touch and transmission of the message 61, "[d]evice B issues a request frame" and sends to the "hub device AP/GO in a Wi-Fi Protected Setup procedure." (Ex. 1005, 27:22-25; *see also id.*, 22:14-20.)

459. Per Suumäki, this frame is transmitted wirelessly and employs an IEEE 802.11 standard format. (*See id.*, 27:55-59; *see also id.*, 13:16-48 ("Wi-Fi Protected Setup" employs "in-band … messages").)

460. It also includes "the authentication information 25 recognizable by the hub device" that "serve[s] as proof that the device B did, in fact engage in an NFC touch…." (*Id.*, 27:25-30, 34-36.)

461. In such circumstances, device B is "***contacting the wireless device.***" Again, where the hub replaces device A, this contact will occur with the same hub with which device B originally engaged in NFC communication.

462. Further, because B sends back the authentication information it previously received from the hub, it "***indicate[s] that***" it ***"has successfully entered the communication network."***

463. Moreover, Suumäki also explains that other ***"indicat[ions]"*** are sent from its enrollee to its hub. For example, the "Enrollee" device can transmit a "WSC_Done message" once it processes any received network credentials. (Ex. 1005, 14:59-64.)

f. Claim 7

"7. The method of claim 6, further comprising: after contacting the wireless device, continuing the commission process, including receiving, via the communication network, device configuration data from the wireless device."

464. As I explain above, Suumäki renders claim 6 obvious.

465. In my opinion, Suumäki also teaches this claim's additional limitation.

466. Again, as I explained above above in connection with claim 6, a POSITA would have recognized that hub device AP/GO could also include an NFC transceiver allowing it to transmit configuration information to device B upon performance of an NFC touch thus making it the claimed ***"wireless device."***

467. Moreover, after performance of an NFC touch event and the hub is contacted by device B and "recognize[s] the authentication information," "hub device AP/GO will grant network access to device B." (Ex. 1005, 27:34-40.)

468. This entails "exchang[ing]" further in-band 802.11 messages "to provision device B with network credentials 28 for the network." (*Id.*, 27:35-46.)

469. "Fig. 5B illustrates an example … frame … sent by the hub device AP/GO to the device B with the … information elements …. used to assemble credentials 28 in device B." (*Id.*, 28:9-19; Fig. 5B.)

470. In my opinion, these received credentials are the claimed "***device configuration data."*** Device B (the "target device") has already contacted the hub (the "wireless device") via NFC and received an initial communication with network

configuration information via the NFC channel. This allows device B to subsequently engage in additional communication with the hub via the wireless network itself so as to receive further network configuration information from the hub (the claimed "device configuration data").

g. Claim 8

"8. The method of claim 7, wherein the device configuration data including at least one of an Internet Protocol address, proxy, and gateway configuration."

471. As I explain above, Suumäki renders claim 7 obvious.

472. In my opinion, Suumäki also teaches this claim's additional limitation.

473. As shown in Figure 5B of Suumäki, the frame sent from the hub to device B to complete the network commissioning process includes a "source address" 534, "destination address" 535, and various other network information (Ex. 1005, Fig. 5B; 15:48-16:18.)

474. In my opinion, a POSITA would have understood that this address information includes the information the claim here requires, including an IP address, a proxy, or a gateway configuration.

475. For example, Suumäki explains that "client identity information" can be in the form of an "IP address." (*Id.*, 26:41-42.) T

476. hus, a POSITA would have understood that either the address or other network information present in the messages transmitted to device B would include an assigned IP address for device B.

h. Claim 9

"9. The method of claim 1, further comprising: generating one of a visual indication and an audio indication to a user about a status of the commissioning process."

477. As I explain above, Suumäki renders claim 1 obvious.

478. In my opinion, Suumäki also teaches this claim's additional limitation.

479. Suumäki indicates that each of its devices can include a "display," "speaker," or other output device. (Ex. 1005, 23:33-45.)

480. Further, Suumäki explains that once it performs an NFC touch event and has been authenticated by the hub, "device B" will be "connected to the network with its new configuration and may communicate with device A over the network, through the hub device AP/GO." (*Id.*, 22:39-45.)

481. Suumäki also teaches that its system recognizes, and keeps track, of connection failures. For instance, a "EAP-Failure message" may be sent to a device in the event it is unable to successfully complete the steps needed to join a network. (*Id.*, 15:5-12; *see also id.*, 18:38-49.)

482. In my opinion, given that Suumäki's devices include displays, and given that Suumäki's system operates to connect a new device to an existing network and is able to detect connection failures, a POSITA would have understood that various status messages would have obviously been provided to a device user via the display.

483. This would have included, for instance, a status message indicating that the new connection process was successful. This would have been indicated via a status icon or some other means on the device's display.

484. This would have also included a displayed to the user that there is no network connection because the configuration process failed.

i. Claim 10

"10. The method of claim 1, further comprising an application that includes a sequence of program instructions directed towards commissioning the target device onto the communication network."

485. This is taught by Suumäki for the same reasons I discussed for limitation [1-1]: Suumäki employs "program logic" and executed "instructions" to carry out its connection setup method.

j. Claim 12

"12. The target device of claim 11, further comprising an application that includes a sequence of program instructions directed towards commissioning the target device onto the communication network."

486. This is taught by Suumäki for the same reasons discussed for claim 10.

k. Claim 15

"15. The target device of claim 11, wherein the communication network includes a wireless local area network (WLAN)."

487. As I explain above, Suumäki renders claim 11 obvious.

488. In my opinion, Suumäki also teaches this claim's additional limitation.

489. The network joined by the new device in Suumäki can be an "IEEE 802.11 wireless local area network (WLAN)…." (Ex. 1005, 1:39-51; *see also id.*, 3:32-40.)

l. Claim 17

"17. The non-transitory computer readable storage medium of claim 16, wherein the one or more programs further comprise instructions for: generating one of a visual indication and an audio indication to a user about a status of the commissioning process."

490. This is taught by Suumäki for the same reasons discussed for claim 9.

m. Claim 18

"18. The non-transitory computer readable storage medium of claim 16, further comprising an application that includes a sequence of program instructions directed towards commissioning the target device onto the communication network."

491. This is taught by Suumäki for the same reasons discussed for claim 10.

n. Claim 19

"19. The non-transitory computer readable storage medium of claim 16, wherein the one or more programs further comprise instructions for: contacting the wireless device via the communication network to indicate that the target device has successfully entered the communication network."

492. This is taught by Suumäki for the same reasons discussed for claim 6.

2. Motivation to Combine

493. The above discussion of Suumäki refers, in some cases, to different embodiments.

494. In my opinion, a POSITA would have been motivated to use these embodiments together and would have expected to succeed when doing so.

495. Showing this, Suumäki itself explains that its system has broad applicability and can be used in many different circumstances.

496. For instance, Suumäki explains that its system allows for the use of many different communication methods. (Ex. 1005: 3:27-50.)

497. It also explains that its network commissioning functionality that can be alternatively implemented in either hardware or software. (*E.g.*, *id.*, 24:43-58.)

498. Further Suumäki explains that its system allows for the transmission of various different types of network information from one device to another. (*Id.*, 3:20-21, 25:60-46, 29:62-30:24.)

499. Given this expressed flexibility, a POSITA would have understood that Suumäki's examples are not meant to be limiting and can be modified or combined with other parts of Suumäki.

500. Further, Suumäki also cites to and incorporates by reference several communication standards. (*See, e.g.*, Ex. 1005, 20:20-22 (incorporating Ex. 1008); Ex. 1005, 19:24-26, 33:58-61 (incorporating Ex. 1012).)

501. In my opinion, to the extent it is determined that these standards were not properly incorporated into Suumäki's specification, a POSITA would nonetheless have been motivated and considered it obvious to use them.

502. Showing this, Suumäki itself repeatedly references and contemplates the use of the standards. (*See, e.g.*, Ex. 1005, 19:32-35 (noting that the "NFC

Forum" has "defined" aspects of the NFC data transmission format in an "NDEF" specification); 19:39-48 (explaining that the ISO/IEC 18092 standard "defines" various aspects of NFC communication).)

503. Moreover, the standards relate to, among other things, the operation of NFC devices. (*See generally* Exs. 1008, 1012.)

504. As I have explained, Suumäki employs NFC to transmit network configuration information. (*See* Ex. 1005, 3:27-31.)

505. Because Suumäki teaches that NFC should be used when implementing its system, a POSITA would have of course recognized that use of available NFC standards would ensure that Suumäki's system is compatible and can be used with the types of NFC hardware present in commercially available devices.

D. Secondary Considerations of Non-Obviousness

506. Based on my review of the '615 patent's prosecution history, I note that no secondary considerations of non-obviousness were identified in connection with the patent's claims.

507. I am not separately aware of any evidence of commercial success, skepticism, failure of others, industry praise, unexpected results, or the like. Instead, as discussed above, it is my opinion that the subject matter embraced by the '615 patent's claims was known in the art and would have been expected to function as a working system and method for commissioning network devices.

I declare that all statements made herein of my own knowledge are true and that all statements made on information and belief are believed to be true, and further that these statements were made with the knowledge that willfully false statements and the like so made are punishable by fine or imprisonment, or both, under Section 1101 of Title 18 of the United States Code.

Date: April 5th, 2023

Location: Nashville, TN

Signature: Douglas C. Schmidt

DOUGLAS C. SCHMIDT, Ph.D.

ATTACHMENT A

Sonos Ex 1003, p. 124
Sonos v. Google, IPR2023-00806

Dr. Douglas Craig Schmidt

Cornelius Vanderbilt Professor of Engineering
Department of Electrical Engineering & Computer Science
Vanderbilt University
Nashville, TN 37203

douglas.c.schmidt@vanderbilt.edu
(TEL) 615-294-9573
(FAX) 615-343-7440
(WEB) www.dre.vanderbilt.edu/∼schmidt/

Educational Background

- **Ph.D. Computer Science**, summer 1994, University of California, Irvine
  Dissertation: "An Object-Oriented Framework for Experimenting with Alternative Process Architectures for Parallelizing Communication Subsystems."
  Co-advisors: Dr. Tatsuya Suda and Dr. Richard W. Selby.
- **M.S. Computer Science**, summer 1990, University of California, Irvine, specializing in software engineering.
- **M.A. Sociology**, summer 1986, College of William and Mary, Williamsburg, Virginia
  Thesis: "A Statistical Analysis of University Resource Allocation Policies."
  Advisor: Dr. Michael A. Faia.
- **B.A. Sociology**, summer 1984, College of William and Mary, Williamsburg, Virginia.

Professional Experience

1. **7/1/18 – present: Associate Provost of Research Development and Technologies**
   Develop cohesive and sustainable information technology (IT) services to advance research and scholarship across Vanderbilt's ten schools and colleges; develop scalable storage and processing solutions by leveraging on-campus and cloud data storage services, as well as creating big data research cores and core-related services; and implement NIST 800-171 compliant IT services.
2. **8/1/18 – present: Co-Director of the Vanderbilt Data Science Institute**
   Facilitate highly innovative research and education initiatives that build on Vanderbilt University's current strengths, promote new collaborations, and establish a cohesive institutional framework that embraces Vanderbilt's diverse campus, while establishing the university as a leader in data science research and education.
3. **2/17 – present: Cornelius Vanderbilt Professor of Engineering**
   Received an endowed chair in recognition of my scholarship, intellect, and leadership in the field of computer science and computer engineering.
4. **1/03 – present: Full Professor with tenure**
   Conducting research on patterns, optimizations, and experimental analysis of advanced generative software techniques that facilitate the development of distributed real-time and embedded middleware and model driven architectures running over high-speed networks and interconnects in the Department of Electrical Engineering and Computer Science at Vanderbilt University.
5. **02/16 – 7/31/18: Associate Chair of Electrical Engineering and Computer Science**
   Provide intellectual leadership within the EECS department. Coordinate with EECS Chair to assist in EE, CS, and CompE curriculum development and course staffing. Assist the faculty in building industry and federal programs for EECS. Assist the Chair in mentoring junior EECS faculty. Assist the EECS Chair in improving the ranking of the EECS programs. Assist the Chair in increasing the quality and number of undergraduate and graduate student applications to the EECS programs.
6. **12/04 – 1/16: Associate Chair of Computer Science and Engineering**
   Provide intellectual leadership within the CS program. Coordinate with EECS Chair to assist in CS and CompE (CS&E) curriculum development and course staffing. Assist the faculty in building industry and federal programs centered in CS&E and IT for EECS. Assist the Chair in mentoring

junior CS&E faculty. Assist the EECS Chair in improving the ranking of the CS&E programs. Assist the Chair in increasing the quality and number of undergraduate and graduate student applications to the CS&E programs.

7. **4/13 – 2/18: Member of the Board of Directors at Real-Time Innovations (RTI)**.
   Work with the CEO and other members of the Board of Directors of RTI to help assess company technical and business strategy.
8. **1/12 – present: Visiting Scientist at the Software Engineering Institute**
   Assist the SEI Director's Office in formulating the SEI's technology strategy for R&D projects and external relationships by aligning the expertise of the SEI technical staff to identify and respond to the needs of sponsors, customers, and partners and help the SEI shape future innovations in complex software-reliant systems.
9. **7/11 – 7/13: Adjunct Professor of Software Engineering** in the Institute for Software Research in the School of Computer Science at Carnegie Mellon University.
10. **9/10 – 12/11: Deputy Director and Chief Technology Officer at the Software Engineering Institute (SEI)**
    Lead the formulation of the SEI's technology strategy for R&D projects and external relationships by aligning the expertise of the SEI technical staff to identify and respond to the needs of sponsors, customers, and partners and help the SEI shape future innovations in complex software-reliant systems.
11. **07/05 – 8/10: Visiting Scientist at the Software Engineering Institute**
    Assisted Linda Northrop and the Ultra-Large-Scale (ULS) Systems team to define the challenge problems, promising technology areas, and research roadmaps for the national R&D effort on building the software-reliant systems of the future that are likely to have billions of lines of code. This activity is defining a broad, multi-disciplinary research agenda for developing ULS systems of the future.
12. **06/09 – 8/10: Chief Technology Officer for Zircon Computing**
    Assisted in the strategic direction of Zircon Computing technology development in the areas of adaptive distributed computing middleware for high-performance and real-time applications. Help to formulate the technology strategy for open-source middleware platforms, R&D partnerships, and external relationships.
13. **6/07 – 8/07: Visiting Professor at Trinity College Dublin**
    Worked with Professor Vinny Cahill and the Distributed Systems Group at Trinity College on topics pertaining to service-oriented architectures and autonomic computing.
14. **10/06 – 5/09: Chief Technology Officer for PrismTechnologies**
    Assisted in the strategic direction of PrismTechnologies technology development in the areas of open-source middleware platforms and model-driven tools. Help to formulate the technology strategy for open-source middleware platforms and model-driven tools, R&D partnerships, and external relationships.
15. **3/02 – 12/02: Program Manager**
    Led the National effort on middleware as a Program Manager for over $60 million dollars of funding at the DARPA Information Exploitation Office (IXO). Programs include Program Composition for Embedded Systems (PCES) and National Experimentation Platform for Hybrid and Embedded Systems (NEPHEST).
16. **9/01 – 3/02: Deputy Director**
    Served as the Deputy Director for the DARPA Information Technology Office (ITO), helping set and guide the National IT research and development agenda and manage programs on autonomous systems, network-centric command and control systems, combat systems, real-time avionics systems, distributed real-time and embedded systems, and augmented cognition for the U.S. Department of Defense.
17. **6/00 – 3/02: Program Manager**
    Led the National effort on middleware as a Program Manager for over $60 million dollars of funding at the DARPA Information Technology Office (ITO). Programs included the Program Composition for Embedded Systems (PCES).

18. **6/01 – 6/02: Co-chair for the Software Design and Productivity (SDP) Coordinating Group**
The SDP Coordinating Group formulates the multi-agency research agenda in fundamental software design for the Federal government's Networking and Information Technology Research and Development (NITR&D) Program, which is the collaborative IT research effort of the major Federal science and technology agencies.

19. **8/99 – 2002: Associate Professor with tenure**
Conducted research on patterns, implementation, and experimental analysis of object-oriented techniques that facilitate the development of high-performance, distributed real-time and embedded computing systems on parallel processing platforms running over high-speed networks and embedded system interconnects in the Department of Computer Engineering at the University of California, Irvine.

20. **6/99 – 8/99: Associate Professor with tenure**
Conducted research on patterns, implementation, and experimental analysis of object-oriented techniques that facilitate the development of high-performance, distributed real-time and embedded computing systems on parallel processing platforms running over high-speed networks and embedded system interconnects in the Department of Computer Science and the Department of Radiology at Washington University in St. Louis.

21. **6/98 – 6/99: Associate Professor without tenure (early promotion)**
Conducted research on patterns, implementation, and experimental analysis of object-oriented techniques that facilitate the development of high-performance, distributed real-time and embedded computing systems on parallel processing platforms running over high-speed networks and embedded system interconnects in the Department of Computer Science and the Department of Radiology at Washington University in St. Louis.

22. **8/94 – 6/98: Assistant Professor**
Conducted research on object-oriented patterns and techniques for developing highly extensible, high-performance communication frameworks in the Department of Computer Science and the Department of Radiology at Washington University in St. Louis.

23. **3/91 – 8/94: Research Assistant**
Developed object-oriented frameworks for multi-processor-based communication subsystems with Professor Tatsuya Suda at the University of California, Irvine.

24. **6/90 – 11/90: Member of the Technical Staff**
Worked as a software engineer for Independence Technologies, which was one of the largest suppliers of enterprise-level TUXEDO systems, providers of professional services, and developers of management and connectivity software to support OLTP environments.

25. **8/88 – 3/91: Research Assistant**
Devised measurement-guided software development techniques for large-scale software systems with Professor Richard Selby at the University of California, Irvine.

26. **6/88 – 8/88: Research Assistant**
Studied the impact of computing on end-users in forty U.S. city governments with Dr. John King and the URBIS project at the Public Policy Research Organization, University of California, Irvine.

27. **Summer of 87: Technical Intern**
Worked with Dr. Peter G. W. Keen at the International Center for Information Technology, Washington D.C. on various projects, including software productivity, videotex, and smartcards.

28. **9/86 – 5/88: Teaching Assistant**
Developed programming assignments, grading tools, and led recitation sessions for a number of undergraduate Computer Science courses at the University of California, Irvine.

29. **Summer of 86: Statistical Programmer**
Programmed SPSS and SAS applications for the "Justice Delayed" project under the direction of Dr. Gene Flango at the National Center for State Courts, Williamsburg, Virginia.

30. **1/85 – 8/86: Research Assistant**
Examined university resource allocation policies via statistical analysis under the direction of Dr. Michael Faia at the College of William and Mary, Williamsburg, Virginia.

Publications

In Print

- **Refereed Journal Publications**

J125 Scott Eisele, Aron Laszka, Douglas C. Schmidt, and Abhishek Dubey, "The Role of Blockchains in Multi-Stakeholder Transactive Energy Systems," the journal *Frontiers in Blockchain: Emerging Technologies and Blockchain in Action: Applications in Supply Chain Management and Energy*, to appear 2021.

J124 Peng Zhang, Chris Downs, Nguyen Thanh Uyen Le, Cory Martin, Paul Shoemaker, Clay Wittwer, Luke Mills, Liam Kelly, Stuart Lackey, Douglas C. Schmidt, Jules White, "Towards Patient-centered Stewardship of Research Data and Research Participant Recruitment with Blockchain Technology," the *Frontiers in Blockchain special selection on Non-Financial Blockchain*, 2020, volume 3, pps. 1-32.

J123 Yao Pan, Fangzhou Sun, Jules White, Douglas C. Schmidt, Jacob Staples, Lee Krause, and Zhongwei Teng, "Detecting Web Attacks with End-to-End Deep Learning," the Springer *Journal of Internet Services and Applications*, 2019, volume 10, number 16, pps. 1-22.

J122 Shelagh Mulvaney, Lori Laffel, Korey Hood, Cindy Lybarger, Sarah Vaala, and Douglas C. Schmidt, "A Mobile App Identifies Momentary Psychosocial and Contextual Factors Related to Mealtime Self-Management in Adolescents with Type 1 Diabetes," Journal of the American Medical Informatics Association, Oxford University Press, 2019, Volume 26, Number 12, pps. 1627-1631.

J121 Maria E. Powell, Marcelino Rodriguez Cancio, David Young, William Nock, Beshoy Abdelmessih, Amy Zeller, Irvin Perez Morales, Peng Zhang, C Gaelyn Garrett, Douglas Schmidt, Jules White, and Alexander Gelbard, "Decoding Phonation with Artificial Intelligence (DEP AI): Proof of Concept," the *Laryngoscope Investigative Otolaryngology* journal, Wiley-Blackwell, Volume 4, Issue 3, 2019, pps. 328-334.

J120 Alex Roehrs, Cristiano Andre da Costa, Rodrigo da Rosa Righi, Valter Ferreira da Silva, Jose Roberto Goldim, and Douglas C. Schmidt, "Analyzing the Performance of a Blockchain-based Personal Health Record Implementation," the *Journal of Biomedical Informatics*, Elsevier, volume 92, 2019.

J119 Peng Zhang, Breck Stodghill, Cory Pitt, Cavan Briody, Douglas C. Schmidt, Jules White, Alan Pitt, and Kelly Aldrich, "OpTrak: Tracking Opioid Prescriptions via Distributed Ledger Technology," the *International Journal of Information Systems and Social Change (IJISSC)*, Special Issue On: Blockchain Technology: Platforms, Tools, and Use Cases, IGI Global, Volume 10, Number 2, 2019.

J118 Peng Zhang, Jules White, Douglas C. Schmidt, Gunther Lenz, S. Trent Rosenbloom, "FHIR-Chain: Applying Blockchain to Securely and Scalably Share Clinical Data," the Elsevier *Computational and Structural Biotechnology Journal* – Blockchain and Distributed Ledger Technologies in Biology, Medicine, and eHealth Special Issue, Volume 16, July 2018, pp 267–278.

J117 Shelagh A Mulvaney, Sarah Vaala, Korey K Hood, Cindy Lybarger, Rachel Carroll, Laura Williams, Douglas C Schmidt, Kevin Johnson, Mary S Dietrich, and Lori Laffel, "Mobile Momentary Assessment and Bio-Behavioral Feedback for Adolescents with Type 1 Diabetes: Feasibility, Engagement Patterns, and Relation with Blood Glucose Monitoring," ¡EM¿Journal of Diabetes Technology and Therapeutics¡/EM¿, Vol 20, No. 7, July 2018, pp 465–474.

J116 Subhav Pradhan, Abhishek Dubey, Shweta Khare, Saideep Nannapaneni, Aniruddha Gokhale, Sankaran Mahadevan, Douglas C Schmidt, Martin Lehofer, "CHARIOT: A Holistic, Goal Driven Orchestration Solution for Resilient IoT Applications," the ACM Transactions on Cyber-Physical Systems, Vol 2, No. 3, July 2018, pp 1-37.

J115 Hull PC, Emerson JS, Quirk ME, Canedo JR, Jones JL, Vylegzhanina V, Schmidt D, Mulvaney S, Beech B, Husaini BH, "A Smartphone App for Families With Preschool-Aged Children in a Public Nutrition Program: Prototype Development and Beta-Testing," *Journal of Medical Internet Research (JMIR): mHealth and uHealth*, Vol 5, No. 8, August, 2017, pp 1–19.

J114 Yao Pan, Jules White, Douglas C. Schmidt, Ahmed Elhabashy, Logan Sturm, Jaime Camelio, and Christopher Williams, "Taxonomies for Reasoning About Cyber-physical Attacks in IoT-based Manufacturing Systems," Special Issue on Advances and Applications in the Internet of

Things, edited by Vicente Garcia Diaz, International Journal of Interactive Multimedia and Artificial Intelligence, volume 4, number 3, 2017, pp. 45-54.

J113 Gordon Blair, Douglas C. Schmidt, and Chantal Taconet, "Middleware for Internet Distribution in the Context of Cloud Computing and the Internet of Things," Springer Journal Annals of Telecommunications, April 2016, Volume 71, Issue 3, pp. 87-92.

J112 Yu Sun, Jules White, Sean Eade, and Douglas C. Schmidt, "ROAR: A QoS-Oriented Modeling Framework for Automated Cloud Resource Allocation and Optimization", the Journal of Systems and Software, Elsevier, volume 116, issue C, June 2016 pp. 146.161.

J111 Nick Guertin, Brian Womble, Paul Bruhns, Douglas C. Schmidt, Adam Porter, and Bill Antypas, "Management Strategies for Software Infrastructure in Large-Scale Cyber-Physical Systems for the US Navy," Cutter IT Journal, Vol. 28, No. 5, May 2015, pp. 14-18.

J110 Jules White, Josi A. Galindo, Tripti Saxena, Brian Dougherty, David Benavides, Douglas C. Schmidt, "Evolving Feature Model Configurations in Software Product Lines," Journal of Systems and Software, Volume 87, 2014, pp. 119-136.

J109 Akram Hakiri, Aniruddha S. Gokhale, Pascal Berthou, Douglas C. Schmidt, Thierry Gayraud, Software-Defined Networking: Challenges and Research Opportunities for the Future Internet," Journal of Computer Networks, Volume 75, 2014, pp. 453-471.

J108 Hamilton Turner, Brian Dougherty, Jules White, Jonathan Preston, Russell Kegley, Douglas C. Schmidt, and Aniruddha Gokhale, "DRE System Performance Optimization with the SMACK Cache Efficiency Metric," Elsevier Journal of Systems and Software, Volume 98, 2014, pp. 25-43.

J107 Akram Hakiri, Pascal Berthoua, Aniruddha Gokhale, Douglas C. Schmidt, Gayraud Thierry, "Supporting SIP-based Data Distribution Service End-to-End QoS in WANs," the Elsevier Journal of Systems and Software, Volume 95, September 2014, pp. 100-121.

J106 Jules White, Douglas C. Schmidt, and Mani Golparvar-Fard, "Applications of Augmented Reality," IEEE Proceedings Special issue on Applications of Augmented Reality, Vol 102, No. 2., February 2014, pp. 120-123.

J105 Nickolas H. Guertin, Paul Bruhns, Douglas C. Schmidt, and Adam Porter, "Experiences Using Online War Games to Improve the Business of Naval Systems Acquisition," Cutter Journal of Information Technology Management, Vol. 27, No. 5, May 2014, pp 13-18.

J104 Michael McLendon, Bill Scherlis, and Douglas C. Schmidt, "Addressing Software Sustainment Challenges for the DoD," STSC CrossTalk, The Journal of Defense Software Engineering special issue on Legacy Systems Software, January, volume 27, number 1, 2014, pp. 27-32.

J103 Akram Hakiri, Pascal Berthoua, Aniruddha Gokhale, Douglas C. Schmidt, Gayraud Thierry, "Supporting End-to-end Scalability and Real-time Event Dissemination in the OMG Data Distribution Service over Wide Area Networks," Elsevier Journal of Systems and Software, volume 86, number 10, October, 2013, pp. 2574-2593.

J102 William Otte, Aniruddha Gokhale, and Douglas C. Schmidt, "Efficient and Deterministic Application Deployment in Component-based, Enterprise Distributed, Real-time, and Embedded Systems," Elsevier Journal of Information and Software Technology, Vol. 55, No. 2, Feb 2013, 475-488.

J101 Dr. Douglas Schmidt, Anita Carleton, Erin Harper, Mary Ann Lapham, Ipek Ozkaya, and Linda Parker Gates, 'What Will It Take to Achieve Agility-at-Scale?", Cutter IT Journal, edited by Hillel Glazer, November 2012, pp. 34-39.

J100 Brian Dougherty, Jules White, and Douglas C. Schmidt, "Model-driven Auto-scaling of Green Cloud Computing Infrastructure," the Elsevier International Journal of Future Generation Computing Systems, Special Issue on Green Computing Systems, Volume 28, Number 2, February, 2012 Pages 371-378.

J99 Joe Hoffert, Douglas C. Schmidt, and Aniruddha Gokhale, "Evaluating Timeliness and Accuracy Trade-offs of Supervised Machine Learning for Adapting Enterprise DRE Systems in Dynamic Environments," the International Journal of Computational Intelligence Systems, Volume 4, Number 5, September-October 2011, pp. 806-816.

J98 James Hill, Pooja Varshneya, and Douglas C. Schmidt, "Evaluating Distributed Real-time and Embedded System Test Correctness using System Execution Traces," Central European Journal of Computer Science, Volume 1, Number 2, August 2011, pp. 167-184.

J97 Brian Dougherty, Jules White, and Douglas C. Schmidt, "Automated Software and Hardware Evolution Analysis for Distributed Real-time and Embedded Systems," the Central European Journal of Computer Science, Volume 1, Number 1, July 2011, pp. 36-57.

J96 James Hill, Hunt Sutherland, Paul Stodinger, Thomas Silveria, Douglas C. Schmidt, John Slaby, and Nikita Visnevski, "OASIS: An Architecture for Dynamic Instrumentation of Enterprise Distributed Real-time and Embedded Systems," the International Journal of Computer Systems Science and Engineering, Special Issue on Real-time Systems, Volume 26, Number 6, November 2011, pp. 413-430.

J95 Jules White, Brian Dougherty, Chris Thompson, Douglas C. Schmidt, "ScatterD: Spatial Deployment Optimization with Hybrid Heuristic/Evolutionary Algorithms," ACM Transactions on Autonomous and Adaptive Systems Special Issue on Spatial Computing, Volume 6 Issue 3, September 2011, 18:1-8:25.

J94 Jules White, Chris Thompson, Hamilton Turner, Brian Dougherty, and Douglas C. Schmidt, WreckWatch: Automatic Traffic Accident Detection and Notification with Smartphones, Journal of Mobile Networks and Applications, Volume 16 Issue 3, July 2011, Pages 285-303.

J93 Jules White, Brian Dougherty, Richard Schantz, Douglas C. Schmidt, Adam Porter, and Angelo Corsaro, "R&D Challenges and Solutions for Highly Complex Distributed Systems: a Middleware Perspective," the Springer Journal of Internet Services and Applications special issue on the Future of Middleware, Volume 2, Number 3, December 2011, pp. 1-8.

J92 Joe Hoffert, Aniruddha Gokhale, and Douglas C. Schmidt, "Autonomic Adaptation of Publish/Subscribe Middleware in Dynamic Environments," the International Journal of Adaptive, Resilient and Autonomic Systems (IJARAS), 2(4), 1-24, October-December 2011, pp. 1-24.

J91 Joe Loyall, Matt Gillen, Aaron Paulos, Larry Bunch, Marco Carvalho, James Edmondson, Douglas C. Schmidt, Andrew Martignoni, and Asher Sinclair, "Dynamic Policy-Driven Quality of Service in Service-Oriented Information Management Systems," Wiley journal on Software: Practice and Experience, December 2011, volume 41, number 12, pp. 1459-1489.

J90 Michael Stal, Douglas C. Schmidt, and Will Otte, "Efficiently and Transparently Automating Scalable On-demand Activation and Deactivation of Services with the Activator Pattern," Software: Practice and Experience, special issue on Pattern Languages: Addressing Challenges, Edited by Mohamed Fayad and Shivanshu Singh, volume 41, number 10, October 2011, Wiley and Sons, pp. 1-16.

J89 Brian Dougherty, Jules White, Douglas C. Schmidt, Russell Kegley, and Jonathan Preston, "Deployment Optimization for Embedded Flight Avionics Systems," STSC CrossTalk, The Journal of Defense Software Engineering, November/December, volume 24, number 6, 2011, pp. 1-8.

J88 Brian Dougherty, Daniel Guymon, Douglas C. Schmidt, and Jules White, "Overcoming Cellular Connectivity Limitations with M2Blue Autonomic Distributed Data Caching," Autonomic Computing for Computer Society of India Magazine, CSI Communications, August 2011, pp. 12-15.

J87 Friedhelm Wolf, Jaiganesh Balasubramanian, Sumant Tambe, Aniruddha Gokhale, and Douglas C. Schmidt, Supporting Component-based Failover Units in Middleware for Distributed Real-time and Embedded Systems, the Elsevier Journal of System Architectures (JSA): Embedded Systems Design, Special Issue on Real-time and Embedded Systems, May, 2011 pp. 597-613.

J86 Jules White, David Benavides, Douglas C. Schmidt, Pablo Trinidad, Antonio Ruiz-Cortes, Brian Doughtery, "Automated Diagnosis of Feature Model Configurations," The Journal of Systems and Software, Special Issue on Software Product-lines, Volume 83, Issue 7, July, 2010, pp. 1094-1107.

J85 Jules White, Brian Doughtery, and Douglas C. Schmidt, "ASCENT: An Algorithmic Technique for Designing Hardware and Software in Tandem, IEEE Transactions on Software Engineering Special Issue on Search-based Software Engineering, November/December 2010 (vol. 36 no. 6), pp. 838-851.

J84 Joe Hoffert, Daniel Mack, and Douglas Schmidt, "Integrating Machine Learning Techniques to Adapt Protocols for QoS-enabled Distributed Real-time and Embedded Publish/Subscribe Middleware," International Journal of Network Protocols and Algorithms (NPA): Special Issue

on Data Dissemination for Large-scale Complex Critical Infrastructures, Volume 2, Number 3, 2010, pp. 37-69.

J83 James Hill, James Edmondson, Aniruddha Gokhale, and Douglas C. Schmidt, "Tools for Continuously Evaluating Distributed System Qualities," IEEE Software, July/August, 2010, Volume 27, Number 4, pp. 65-71.

J82 James Edmondson and Douglas C. Schmidt, Multi-Agent Distributed Adaptive Resource Allocation (MADARA), International Journal of Communication Networks and Distributed Systems (IJCNDS), Special Issue on: Grid Computing, Edited by Michal Wozniak and Krzysztof Walkowiak, Volume 5, Number 3, 2010, pp. 229-245.

J81 Jules White, Christin Groba, Sibohan Clarke, Brian Dougherty, Chris Thompson, and Douglas C. Schmidt, "R&D Challenges and Solutions for Mobile Cyber-Physical Applications and Supporting Internet Services," the Springer Journal of Internet Services and Applications, Volume 1, Number 1, 2010, pp. 45-56.

J80 Jules White, Jeff Gray, and Douglas C. Schmidt, "Constraint-based Model Weaving," Transactions on Aspect-Oriented Software Development, Special Issue on Aspects and Model Driven Engineering, eds. Robert France and Jean-Marc Jezequel, pp. 153-190, Volume 5560, Number 6, 2009.

J79 Jules White, Harrison Strowd, and Douglas C. Schmidt, "Creating Self-healing Service Compositions with Feature Modeling and Microrebooting," the International Journal of Business Process Integration and Management (IJBPIM), Special issue on Model-Driven Service-Oriented Architectures, Inderscience Publishers, pp. 35-46, Volume 4, Number 1, 2009.

J78 Nishanth Shankaran, John Kinnebrew, Xenofon Koutsoukos, Chenyang Lu, Douglas C. Schmidt, and Gautam Biswas, "An Integrated Planning and Adaptive Resource Management Architecture for Distributed Real-time Embedded Systems," IEEE Transactions on Computers, Special Issue on Autonomic Network Computing, Special Issue on Autonomic Network Computing, volume 58, number 11, pp. 1485-1498, November 2009.

J77 Jules White, Brian Doughtery, and Douglas C. Schmidt, "Selecting Highly Optimal Architectural Feature Sets with Filtered Cartesian Flattening," the Journal of Software and Systems, Special Issue on Design Decisions and Design Rationale in Software Architecture, Volume 82, Issue 8, pp. 1268-1284, August 2009.

J76 Jules White, James, Hill, Sumant Tambe, Jeff Gray, Aniruddha Gokhale, and Douglas C. Schmidt "Improving Domain-specific Language Reuse through Software Product-line Configuration Techniques, IEEE Software Special Issue: Domain-Specific Languages and Modeling, vol. 26, no. 4, pp. 47-53, July/August 2009.

J75 Jules White and Douglas C. Schmidt, "Automating Deployment Planning with an Aspect Weaver," IET Software Journal Special Issue on Domain-specific Aspect Languages, Volume 3, Issue 3 , p. 167-183, June 2009.

J74 Shanshan Jiang, Yuan Xue, and Douglas C. Schmidt, "Minimum Disruption Service Composition and Recovery in Mobile Ad Hoc Networks, Elsevier Computer Networks Journal, Special Issue on Autonomic and Self-Organizing Systems, Volume 53, Issue 10, Pages 1649-1665, 2009.

J73 Nishanth Shankaran, Douglas C. Schmidt, Xenofon D. Koutsoukos, Yingming Chen, and Chenyang Lu, "Design and Performance Evaluation of an Adaptive Resource Management Framework for Distributed Real-time and Embedded Systems," EURASIP Journal on Embedded Systems (EURASIP JES): Special issue on Operating System Support for Embedded Real-Time Applications, Edited by Alfons Crespo, Ismael Ripoll, Michael Gonzalez Harbour, and Giuseppe Lipari, 2008, Pgs. 47-66.

J72 Aniruddha Gokhale, Krishnakumar Balasubramanian, Jaiganesh Balasubramanian, Arvind Krishna, and George T. Edwards, Gan Deng, Emre Turkay, Jeffrey Parsons, and Douglas C. Schmidt, Model Driven Middleware: A New Paradigm for Deploying and Provisioning Distributed Real-time and Embedded Applications, Elsevier Journal of Science of Computer Programming: Special Issue on Foundations and Applications of Model Driven Architecture (MDA), Edited by Mehmet Aksit, Volume 73, Issue 1, 1 September 2008, Pgs. 39-58.

J71 Nishanth Shankaran, Xenofon Koutsoukos, Chenyang Lu, Douglas C. Schmidt, and Yuan Xue, "Hierarchical Control of Multiple Resources in Distributed Real-time and Embedded Systems," the Springer Real-time Systems Journal, Volume 39, Numbers 1-3, August, 2008, pgs. 237-282.

J70 Douglas C. Schmidt, Angelo Corsaro, and Hans Van'T Hag, "Addressing the Challenges of Tactical Information Management in Net-Centric Systems with DDS," CrossTalk special issue on Distributed Software Development, pgs. 24-29, May 2008.

J69 Jules White, Douglas C. Schmidt, Egon Wuchner, and Andrey Nechypurenko, "Automatically Composing Reusable Software Components for Mobile Devices," Journal of the Brazilian Computer Society (JBCS), Special Issue in Software Reuse: Methods, Processes, Tools and Experiences, Sociedade Brasileira de Computacao, Porto Alegre, Volume 14, Number 1, pgs. 25-44, March, 2008.

J68 Jules White, Douglas C. Schmidt, Andrey Nechypurenko, and Egon Wuchner, "Model Intelligence: an Approach to Modeling Guidance," UPGRADE Journal, Volume 9, Number 2, pgs. 22-28, April 2008.

J67 Douglas C. Schmidt, "Beyond Objects: Evaluating Technologies for Developing Distributed Systems," Computer Society of India Communications, Special Issue on OO Technologies, edited by Debasish Jana, pgs. 30-37, February 2008.

J66 Jules White, Douglas C. Schmidt, and Aniruddha Gokhale, "Simplifying Autonomic Enterprise Java Bean Applications via Model-driven Engineering and Simulation," The Journal of Software and System Modeling, Volume 7, Number 1, February, 2008, pgs. 3-23.

J65 Cemal Yilmaz, Adam Porter, Arvind S. Krishna, Atif Memon, Douglas C. Schmidt, and Aniruddha Gokhale, "Reliable Effects Screening: A Distributed Continuous Quality Assurance Process for Monitoring Performance Degradation in Evolving Software Systems," IEEE Transactions on Software Engineering Vol. 33, No. 8, August 2007, pgs. 510-525.

J64 Frank Buschmann, Kevlin Henning, and Douglas C. Schmidt, "Past, Present, and Future Trends in Software Patterns," IEEE Software special issue on Patterns, Vol. 24, No. 4, July/August, 2007, pgs. 31-37.

J63 Patrick Lardieri, Jaiganesh Balasubramanian, Douglas C. Schmidt, Gautam Thaker, Aniruddha Gokhale, and Tom Damiano, A Multi-layered Resource Management Framework for Dynamic Resource Management in Enterprise DRE Systems, the Journal of Systems and Software: special issue on Dynamic Resource Management in Distributed Real-Time Systems, editors C. Cavanaugh and F. Drews and L. Welch, Vol 80, Issue 7, July 2007, pgs. 984-996.

J62 Janos Sztipanovits, John Bay, Larry Rohrbough, Shankar Sastry, Douglas C. Schmidt, Don Wilson, and Don Winters, "Escher: A New Technology Transitioning Model," IEEE Computer, Vol. 40, No. 3, March 2007, pgs. 90-92.

J61 Venkita Subramonian, Gan Deng, Christopher Gill, Jaiganesh Balasubramanian, Liang-Jui Shen, William Otte, Douglas C. Schmidt, Aniruddha Gokhale, and Nanbor Wang, "The Design and Performance of Component Middleware for QoS-enabled Deployment and Configuration of DRE Systems," Elsevier Journal of Systems and Software, Special Issue Component-Based Software Engineering of Trustworthy Embedded Systems, pp. 668-677, volume 80, number 5, March, 2007.

J60 Krishnakumar Balasubramanian, Jaiganesh Balasubramanian, Jeff Parsons, Aniruddha Gokhale, and Douglas C. Schmidt, "A Platform-Independent Component Modeling Language for Distributed Real-time and Embedded Systems," Elsevier Journal of Computer and System Sciences, Volume 73, Number 2, March 2007, pgs. 171 - 185.

J59 Adam Porter, Atif Memon, Cemal Yilmaz, Douglas C. Schmidt, and Bala Natarajan, "Skoll: A Process and Infrastructure for Distributed Continuous Quality Assurance, IEEE Transactions on Software Engineering, 2007, Vol. 33, No. 2, February 2007, pgs. 124-141.

J58 Richard E. Schantz, Douglas C. Schmidt, Joseph P. Loyall, and Craig Rodrigues, "Controlling Quality-of-Service in Distributed Real-time and Embedded Systems via Adaptive Middleware," the Wiley Software Practice and Experience journal special issue on Experiences with Auto-adaptive and Reconfigurable Systems, co-editors Mehmet Aksit, Zied Choukair, and Tzilla Elrad, vol. 36, no. 11-12, September 2006, pgs. 1189 - 1208.

J57 Douglas C. Schmidt, "Model-Driven Engineering, IEEE Computer, Vol. 39. No. 2, February 2006, pp. 41-47.

J56 Arvind S. Krishna, Aniruddha Gokhale, Douglas C. Schmidt, John Hatcliff, and Venkatesh Prasad Ranganat, "Towards Highly Optimized Real-time Middleware for Software Product-line Architectures," ACM SIGBED Review, Volume 3, No. 1, January 2006, pgs. 12-16.

J55 Gabor Madl, Sherif Abdelwahed, and Douglas C. Schmidt, "Verifying Distributed Real-time Properties of Embedded Systems via Graph Transformations and Model Checking, Real-time Systems Journal, vol 33, no. 1-3, pgs. 77-100, July 2006.

J54 Cemal Yilmaz, Adam Porter, Atif Memon, Arvind S. Krishna, Douglas C. Schmidt, and Aniruddha Gokhale, Techniques and Processes for Improving the Quality and Performance of Open-Source Software, Software Process - Improvement and Practice Journal: Special Issue on Free/Open Source Software Processes, vol 11, no 2, May 2006, pgs. 163-176.

J53 Krishnakumar Balasubramanian, Arvind S. Krishna, Emre Turkay, Jaiganesh Balasubramanian, Jeff Parsons, Aniruddha Gokhale, and Douglas C. Schmidt, "Applying Model-Driven Development to Distributed Real-time and Embedded Avionics Systems, the International Journal of Embedded Systems, special issue on Design and Verification of Real-Time Embedded Software, April 2005.

J52 Arvind S. Krishna, Cemal Yilmaz, Adam Porter, Atif Memon, Douglas C. Schmidt, and Aniruddha Gokhale, "Distributed Continuous Quality Assurance Process for Evaluating QoS of Performance Intensive Software," Studia Informatica Universalis, Volume 4, No. 1, pp. 53-72, March 2005.

J51 Janos Sztipanovits, Gautam Biswas, Ken Frampton, Andy Gokhale, Larry Howard, Gabor Karsai, John Koo, Xenofon Koutsoukos, and Douglas C. Schmidt, "Introducing Embedded Software and Systems Education and Advanced Learning Technology in an Engineering Curriculum," ACM Transactions in Embedded Computing Systems - Special Issue on Education, edited by Alan Burns and Alberto Sangiovanni-Vincentelli, Vol 4, No. 1, pp. 549-568, August 2005.

J50 Arvind S. Krishna, Nanbor Wang, Balachandran Natarajan, Aniruddha Gokhale, Douglas C. Schmidt and Gautam Thaker, "CCMPerf: A Benchmarking Tool for CORBA Component Model Implementations", The International Journal of Time-Critical Computing Systems, Springer, Vol. 29, No. 2-3, pp. 281-308, March-April 2005.

J49 Chris Gill, Jeanna M. Gossett, David Corman, Joseph P. Loyall, Richard E. Schantz, Michael Atighetchi, and Douglas C. Schmidt, "Integrated Adaptive QoS Management in Middleware: An Empirical Case Study," The International Journal of Time-Critical Computing Systems, Springer, Vol. 29, Nos. 2-3, pp. 101-130, March-April 2005.

J48 Aniruddha Gokhale, Balachandran Natarajan, Douglas C. Schmidt, and Joseph Cross, "Towards Real-time Fault-Tolerant CORBA Middleware," Cluster Computing: the Journal on Networks, Software, and Applications Special Issue on Dependable Distributed Systems, edited by Alan George, Volume 7, Number 4, October 2004.

J47 Arvind S. Krishna, Cemal Yilmaz, Atif Memon, Adam Porter, Douglas C. Schmidt, Aniruddha Gokhale, and Balachandran Natarajan, "Preserving Distributed Systems Critical Properties: a Model-Driven Approach," the IEEE Software special issue on the Persistent Software Attributes, Nov/Dec 2004.

J46 Christopher Gill, Douglas C. Schmidt, Yamuna Krishnamurthy, Irfan Pyarali, Louis Mgeta, Yuanfang Zhang, and Stephen Torri, "Enhancing the Adaptivity of Distributed Real-time and Embedded Systems via Standard QoS-enabled Dynamic Scheduling Middleware," the Journal of the Brazilian Computer Society (JCBS) special issue on Adaptive Software Systems, Volume 10, Number 1, pp. 19-30, 2004.

J45 Douglas C. Schmidt, Aniruddha Gokhale, and Balachandran Natarajan, "Frameworks: Why They Are Important and How to Apply Them Effectively," ACM Queue magazine, Volume 2, Number 5, July/August 2004.

J44 Douglas C. Schmidt, Richard Schantz, Aniruddha Gokhale, and Joe Loyall, "Middleware R&D Challenges for Distributed Real-time and Embedded Systems," ACM SIGBED Review, Volume 1, No. 1, April 2004.

J43 Angelo Corsaro and Douglas C. Schmidt, "The Design and Performance of Real-time Java Middleware," Special Issue on Middleware for the IEEE Transactions on Parallel and Distributed Systems, guest editor Rachid Guerraoui, Volume 14, Number 11, November 2003.

J42 Irfan Pyarali, Douglas C. Schmidt, and Ron Cytron, "Techniques for Enhancing Real-time CORBA Quality of Service," the IEEE Proceedings Special Issue on Real-time Systems, co-editors Yann-Hang Lee and C. M. Krishna, Volume 91, Number 7, July 2003.

J41 Nanbor Wang, Douglas C. Schmidt, Aniruddha Gokhale, Christopher D. Gill, Balachandran Natarajan, Craig Rodrigues, Joseph P. Loyall, and Richard E. Schantz, "Total Quality of Service Provisioning in Middleware and Applications," Elsevier Journal of Microprocessors and Microsystems, Volume 26, Number 9-10, January 2003.

J40 Christopher D. Gill, Douglas C. Schmidt, and Ron Cytron, "Multi-Paradigm Scheduling for Distributed Real-Time Embedded Computing," IEEE Proceedings Special Issue on Modeling and Design of Embedded Systems, Volume 91, Number 1, January, 2003.

J39 Aniruddha Gokhale, Bala Natarajan, Douglas C. Schmidt, and Nanbor Wang, "Modeling and Synthesis of Middleware Components," Communications of the ACM, special issue on Enterprise Components, Services and Business Rules, edited by Ali Arsanjani, October 2002.

J38 Douglas C. Schmidt and Carlos O'Ryan, "Patterns and Performance of Distributed Real-time and Embedded Publisher/Subscriber Architectures," the Journal of Systems and Software, Special Issue on Software Architecture – Engineering Quality Attributes, edited by Jan Bosch and Lars Lundberg, October 2002.

J37 Douglas C. Schmidt, "R&D Advances in Middleware for Distributed, Real-time and Embedded Systems," Communications of the ACM, Volume 45, Number 6, June 2002, edited by Gul Agha.

J36 Carlos O'Ryan, Douglas C. Schmidt, and J. Russell Noseworthy, "Patterns and Performance of a CORBA Event Service for Large-scale Distributed Interactive Simulations," International Journal of Computer Systems Science and Engineering, CRL Publishing, Volume 17, Number 2, March, 2002.

J35 Douglas C. Schmidt, Bala Natarajan, Aniruddha Gokhale, Nanbor Wang, and Chris Gill, "TAO: A Pattern-Oriented Object Request Broker for Distributed Real-time and Embedded Systems," IEEE Distributed Systems Online, Volume 3, Number 2, February, 2002.

J34 Douglas C. Schmidt, Rick Schantz, Mike Masters, Joseph Cross, David Sharp, and Lou DiPalma, "Towards Adaptive and Reflective Middleware for Network-Centric Combat Systems," CrossTalk, November, 2001.

J33 Nanbor Wang, Douglas C. Schmidt, Ossama Othman, and Kirthika Parameswaran, "Evaluating Meta-Programming Mechanisms for ORB Middleware," *IEEE Communications Magazine* special issue on "Evolving Communications Software: Techniques and Technologies," co-edited by Bill Opdyke and Algirdas Pakstas, Volume 39, Number 10, October, 2001.

J32 Nanbor Wang, Douglas C. Schmidt, Kirthika Parameswaran, and Michael Kircher, "Towards a Reflective Middleware Framework for QoS-enabled CORBA Component Model Applications," *IEEE Distributed Systems Online* special issue on Reflective Middleware, July, 2001.

J31 Chris Gill, David Levine, and Douglas C. Schmidt, "The Design and Performance of a Real-Time CORBA Scheduling Service," The *Real-time Systems, The International Journal of Time-Critical Computing Systems*, special issue on Real-Time Middleware, Kluwer Academic Publishers, guest editor Wei Zhao, Volume 20, Number 2, March 2001.

J30 Douglas C. Schmidt, Sumedh Mungee, Sergio Flores-Gaitan, and Aniruddha Gokhale, "Software Architectures for Reducing Priority Inversion and Non-determinism in Real-time Object Request Brokers," *Journal of Real-time Systems*, Kluwer, Vol. 21, No. 2, 2001.

J29 Ossama Othman, Carlos O'Ryan, and Douglas C. Schmidt, "An Efficient Adaptive Load Balancing Service for CORBA," *IEEE Distributed Systems Online*, March, 2001.

J28 Ossama Othman, Carlos O'Ryan, and Douglas C. Schmidt "The Design of an Adaptive CORBA Load Balancing Service, *IEEE Distributed Systems Online*, April, 2001.

J27 Carlos O'Ryan, Douglas C. Schmidt, Fred Kuhns, Marina Spivak, Jeff Parsons Irfan Pyarali, and David L. Levine, "Evaluating Policies and Mechanisms to Support Distributed Real-Time Applications with CORBA," *Concurrency and Computation: Practice and Experience* (Special Issue on Distributed Objects and Applications), Wiley and Sons, Vol. 13, No. 2, February, 2001.

J26 Douglas C. Schmidt, Vishal Kachroo, Yamuna Krisnamurthy, and Fred Kuhns, "Developing Next-generation Distributed Applications with QoS-enabled DPE Middleware," *IEEE Communications magazine*, edited by Abdi Modarressi and Sheshadri Mohan, Vol 17, No. 10, October, 2000.

J25 Douglas C. Schmidt and Fred Kuhns, "An Overview of the Real-time CORBA Specification," *IEEE Computer*, Special Issue on Object-Oriented Real-time Distributed Computing, edited by Eltefaat Shokri and Philip Sheu, June 2000.

J24 James Hu and Douglas C. Schmidt, Developing Flexible and High-performance Web Servers with Frameworks and Patterns, Symposium on Frameworks, *ACM Computing Surveys*, (Fayad and Wegner, eds.) Vol. 32(1es), March 2000.

J23 Fred Kuhns, Douglas C. Schmidt, Carlos O'Ryan, and David L. Levine, "Supporting High-performance I/O in QoS-enabled ORB Middleware," *Cluster Computing: the Journal on Networks, Software, and Applications*, Volume 3, Number 3, 2000.

J22 Irfan Pyarali, Carlos O'Ryan, Douglas C. Schmidt, Nanbor Wang, Vishal Kachroo, and Aniruddha Gokhale, "Using Principle Patterns to Optimize Real-time ORBs," *IEEE Concurrency*, Object-Oriented Systems track, edited by Murthy Devarakonda, Volumn 8, Number 1, January-March 2000.

J21 James Hu, Irfan Pyarali, and Douglas C. Schmidt, "The Object-Oriented Design and Performance of JAWS: A High-performance Web Server Optimized for High-speed Networks," The *Parallel and Distributed Computing Practices* journal, special issue on Distributed Object-Oriented Systems, edited by Maria Cobb, Vol. 3, No. 1, March 2000.

J20 Andy Gokhale and Douglas C. Schmidt, "Optimizing a CORBA IIOP Protocol Engine for Minimal Footprint Multimedia Systems," *IEEE Journal on Selected Areas in Communications* special issue on Service Enabling Platforms for Networked Multimedia Systems, September, 1999.

J19 Douglas C. Schmidt and Chris Cleeland, "Applying Patterns to Develop Extensible and Maintainable ORB Middleware," *IEEE Communications Magazine*, April, 1999.

J18 Irfan Pyarali and Douglas C. Schmidt, "An Overview of the CORBA Portable Object Adapter," Special Issue on CORBA in the ACM *StandardView* magazine, March, 1999.

J17 Prashant Jain, Seth Widoff, and Douglas C. Schmidt, "The Design and Performance of MedJava, A Distributed Electronic Medical Imaging System Developed with Java Applets and Web Tools," IEE/BCS *Distributed Systems Engineering Journal*, Volume 5, No. 4, December 1998.

J16 Douglas C. Schmidt, "Evaluating Architectures for Multi-threaded CORBA Object Request Brokers," *Communications of the ACM*, Special Issue on CORBA, ACM, edited by Krishnan Seetharaman, Volume 41, No. 10, October 1998.

J15 Andy Gokhale and Douglas C. Schmidt, "Measuring and Optimizing CORBA Latency and Scalability Over High-speed Networks," *IEEE Transactions on Computing*, April, 1998.

J14 Douglas C. Schmidt and James Hu, "Developing Flexible and High-performance Web Servers with Frameworks and Patterns," *Computing Surveys*, ACM, Vol. 29, March 1998.

J13 Douglas C. Schmidt, David Levine, and Sumedh Mungee, "The Design of the TAO Real-Time Object Request Broker," *Computer Communications*, Special Issue on Building Quality of Service into Distributed System, Elsevier Science, April, 1998.

J12 Guru Parulkar, Douglas C. Schmidt, Eileen Kraemer, Jon Turner, Anshul Kantawala, "An Architecture for Monitoring, Visualization, and Control and Gigabit Networks," *IEEE Network*, September/October, 1997.

J11 Douglas C. Schmidt, "Lessons Learned Building Reusable OO Frameworks for Distributed Software," *Communications of the ACM* Special Issue on OO Application Frameworks, ACM, Vol. 40, No. 10, October, 1997.

J10 Douglas C. Schmidt, "Applying Patterns to Meet the Challenges of Concurrent Software," *IEEE Concurrency*, Special Edition on Software Engineering for Parallel and Distributed Systems, Vol. 5, No. 3, August, 1997.

J9 Douglas C. Schmidt, Andy Gokhale, Tim Harrison, and Guru Parulkar, "A High-performance Endsystem Architecture for Real-time CORBA," *IEEE Communications Magazine*, Vol. 14, No. 2, February, 1997.

J8 Silvano Maffeis and Douglas C. Schmidt, "Constructing Reliable Distributed Communication Systems with CORBA," *IEEE Communications Magazine*, Vol. 14, No. 2, February, 1997.

J7 Douglas C. Schmidt, "Using Design Patterns to Develop Reuseable Object-Oriented Software," *ACM Computing Surveys*, Vol. 28, No. 4es, December 1996.

J6 Irfan Pyarali, Douglas C. Schmidt, and Tim Harrison, "Design and Performance of an Object-Oriented Framework for High-Speed Electronic Medical Imaging," *USENIX Computing Systems*, November/December, Vol. 9, No. 4, 1996.

J5 Douglas C. Schmidt, "A Family of Design Patterns for Application-level Gateways," *The Journal of Theory and Practice of Object Systems* (Special Issue on Patterns and Pattern Languages), Wiley and Sons, Vol. 2, No. 1, 1996.

J4 Douglas C. Schmidt, "Experience Using Design Patterns to Develop Reuseable Object-Oriented Communication Software," *Communications of the ACM Special Issue on Object-Oriented Experiences*, ACM, Vol. 38, No. 10, October, 1995, pp 65-74.

J3 Douglas C. Schmidt and Tatsuya Suda, "An Object-Oriented Framework for Dynamically Configuring Extensible Distributed Systems," *Distributed Systems Engineering Journal* (Special issue on Configurable Distributed Systems), IEE, Vol. 2, December, 1994, pp. 280-293.

J2 Douglas C. Schmidt, Donald F. Box, and Tatsuya Suda, "ADAPTIVE: A Dynamically Assembled Protocol Transformation, Integration, and eValuation Environment," *Journal of Concurrency: Practice and Experience*, Wiley and Sons, Ltd., Vol. 5, No. 4, June, 1993, pp. 269-286.

J1 Douglas C. Schmidt and Tatsuya Suda, "Transport System Architecture Services for High-Performance Communication Systems," *Journal of Selected Areas of Communications special-issue on Protocols for Gigabit Networks*, IEEE, Vol. 11, No. 4, May, 1993, pp. 489-506.

- **Book Publications and Book Chapters**

  - **Books Authored**

    BA5 Frank Buschmann, Kevlin Henney, and Douglas C. Schmidt, *Pattern-Oriented Software Architecture: On Patterns and Pattern Languages*, Wiley and Sons, 2007.

    BA4 Frank Buschmann, Kevlin Henney, and Douglas C. Schmidt, *Pattern-Oriented Software Architecture: A Pattern Language for Distributed Computing*, Wiley and Sons, 2007.

    BA3 Steve Huston and Douglas C. Schmidt, *C++ Network Programming: Systematic Reuse with ACE and Frameworks*, Addison-Wesley Longman, 2003.

    BA2 Douglas C. Schmidt and Steve Huston, *C++ Network Programming: Mastering Complexity with ACE and Patterns*, Addison-Wesley Longman, 2002.

    BA1 Douglas C. Schmidt, Michael Stal, Hans Rohert, and Frank Buschmann, *Pattern-Oriented Software Architecture: Patterns for Concurrent and Networked Objects*, John Wiley and Sons, 2000.

  - **Book-length Reports Authored**

    BR4 Werner Dahm, Douglas Schmidt, et al. "Cyber Situational Awareness," SAB-TR-12-01, 1 October 2012.

    BR3 Alan Eckbreth, Charles Saff, Kevin Connolly, Natalie Crawford, Chris Eick, Mark Goorsky, Neil Kacena, David Miller, Robert Schafrik, Douglas Schmidt, "Sustaining Air Force Aging Aircraft into the 21st Century," SAB-TR-11-01 1 August 2011.

    BR2 William Scherlis, Robert Behler, Barry Boehm, Lori Clarke, Michael Cusumano, Mary Ann Davidson, Larry Druffel, Russell Frew, James Larus, Greg Morrisett, Walker Royce, Douglas C. Schmidt, John Stenbit, Kevin Sullivan, *Critical Code Software Producibility for Defense*, Committee for Advancing Software-Intensive Systems Producibility, National Research Council of the National Academies, Washington, D.C.

    BR1 Linda Northrop, Peter Feiler, Richard P. Gabriel, John Goodenough, Rick Linger, Tom Longstaff, Rick Kazman, Mark Klein, Linda Northrop, Douglas Schmidt, Kevin Sullivan, and Kurt Wallnau *Ultra-Large-Scale Systems: Software Challenge of the Future*, Software Engineering Institute, June 2006.

  - **Books Edited**

    BE3 Co-editor of *Building Application Frameworks: Object-Oriented Foundations of Framework Design*, John Wiley & Sons, 1999 (co-editors are Mohamed Fayad and Ralph Johnson), ISBN 0-471-24875-4

    BE2 Co-editor of *Implementing Application Frameworks: Object-Oriented Frameworks at Work*, John Wiley & Sons, 1999 (co-editors are Mohamed Fayad and Ralph Johnson), ISBN 0-471-25201-8

BE1 Co-editor of *Pattern Languages of Program Design*, Addison-Wesley, 1995 (co-editor is Jim Coplien, Bell Labs).

– **Book Chapters**

BC64 Michael Walker, Douglas C. Schmidt, and Abhishek Dubey, "Testing at Scale of IoT Blockchain Applications," *Role of Blockchain Technology in IoT Applications*, Volume 115, 1st Edition, edited by Shiho Kim, Ganesh Chandra Deka, and Peng Zhang, 2019.

BC63 Peng Zhang, Douglas C. Schmidt, Jules White, and Abhishek Dubey, "Consensus Mechanisms and Information Security Technologies," *Role of Blockchain Technology in IoT Applications*," Volume 115, 1st Edition, edited by Shiho Kim, Ganesh Chandra Deka, and Peng Zhang, 2019.

BC62 Peng Zhang, Douglas C. Schmidt, Jules White, and Gunther Lenz, "Blockchain Technology Use Cases in Healthcare," *Blockchain Technology: Platforms, Tools, and Use Cases*, edited by Ganesh Deka, 2018.

BC61 Michael Walker, Douglas C. Schmidt, and Jules White, "An Elastic Platform for Large-scale Assessment of Software Assignments for MOOCs (EPLASAM)," User-Centered Design Strategies for Massive Open Online Courses (MOOCs), edited by Ricardo Mendoza-Gonzalez, IGI Global, 2016.

BC60 Joseph Hoffert, Douglas C. Schmidt, and Aniruddha Gokhale, "Quantitative Productivity Analysis of a Domain-Specific Modeling Language," in the *Handbook of Research on Innovations in Systems and Software Engineering*, IGI Global, Aug 2014, pp. 313-344.

BC59 Will Otte, Douglas C. Schmidt, and Aniruddha Gokhale, "Performance and Scalability of a Large-scale Deployment and Configuration Framework," *The Performance of Open Source Applications*, edited by Tony Arkles and Tavish Armstrong, O'Reilly, 2013.

BC58 Chris Thompson, Jules White, and Douglas C. Schmidt, "Analyzing Mobile Application Software Power Consumption via Model-Driven Engineering," *Advances and Applications in Model-Driven Software Engineering*, edited by Vicente Garcia Diaz, IGI Global, 2013.

BC57 James Edmondson and Douglas C. Schmidt, "Towards Accurate Simulation of Large-Scale Systems via Time Dilation," *Real-time Simulation Technologies: Principles, Methodologies, and Applications*, edited by Katalin Popovici and Pieter J. Mosterman, CRC Press, 2012.

BC56 James Hill and Douglas C. Schmidt, "Using Test Clouds to Enable Continuous Integration Testing of Distributed Real-time and Embedded System Applications," *Software Testing in the Cloud: Perspectives on an Emerging Discipline.* Edited by Scott Tilley and Tauhida Parveen, IGI Global, 2012.

BC55 Angelo Corsaro and Douglas C. Schmidt, "The Data Distribution Service: The Communication Middleware Fabric for Scalable and Extensible Systems-of-Systems," *System of Systems*, edited by Adrian V. Gheorghe, InTech, 2012.

BC54 Joe Hoffert and Douglas C. Schmidt, "Improving Software Development Productivity for QoS Policy Configurations," *Model-Driven Domain Analysis and Software Development: Architectures and Functions*, a book edited by Janis Osis and Erika Asnina, 2011.

BC53 Nilabja Roy and Douglas C. Schmidt, "Model-Driven Performance Evaluation of Web Application Portals," *Model-Driven Domain Analysis and Software Development: Architectures and Functions*, a book edited by Janis Osis and Erika Asnina, 2011.

BC52 Brian Dougherty, Jules White, and Douglas C. Schmidt, "MDA-based Configuration of Distributed Real-time and Embedded Systems," *Model-Driven Domain Analysis and Software Development: Architectures and Functions*, a book edited by Janis Osis and Erika Asnina, 2011.

BC51 Hamilton Turner, Jules White, Brian Dougherty, and Douglas C. Schmidt, "Building Mobile Sensor Networks Using Smartphones and Web Services: Ramifications and Development Challenges," *Handbook of Research on Mobility and Computing: Evolving Technologies and Ubiquitous Impacts*, edited by Maria Manuela Cruz-Cunha and Fernando Moreira, IGI Global, Hershey, PA, USA 2009.

BC50 Gan Deng, Jeff Gray, Douglas C. Schmidt, Yuehua Lin, Aniruddha Gokhale, and Gunther Lenz, "Evolution in Model-Driven Software Product-Line Architectures," *Software Applications: Concepts, Methodologies, Tools, and Applications*, edited by Pierre F. Tiako, 2009.

BC49 Jules White, Douglas C. Schmidt, Andrey Nechypurenko, and Egon Wuchner, "Reducing

the Complexity of Modeling Large Software Systems," *Software Applications: Concepts, Methodologies, Tools, and Applications*, edited by Pierre F. Tiako, 2009.

BC48 Jules White, Brian Doughtery, Harrison Strowd, and Douglas C. Schmidt, "Using Filtered Cartesian Flattening and Microrebooting to Build Enterprise Applications with Self-adaptive Healing," *Software Engineering for Self-Adaptive Systems*, edited by Betty H. C. Cheng, Rogerio de Lemos, Holger Giese, Paola Inverardi, and Jeff Magee, 2009.

BC47 Jeff Gray, Sandeep Neema, Jing Zhang, Yuehua Lin, Ted Bapty, Aniruddha Gokhale, and Douglas C. Schmidt, "Concern Separation for Adaptive QoS Modeling in Distributed Real-Time Embedded Systems," *Behavioral Modeling for Embedded Systems and Technologies: Applications for Design and Implementation*, edited by Joa M. Fernandes and Luis Gomes, 2009.

BC46 Rick Schantz and Douglas C. Schmidt, "Middleware for Distributed Systems," Wiley *Encyclopedia of Computer Science and Engineering*, edited by Benjamin Wah, 2008.

B45 Jules White, Andrey Nechypurenko, Egon Wuchner, and Douglas C. Schmidt, "Reducing the Complexity of Optimizing Large-scale Systems by Integrating Constraint Solvers with Graphical Modeling Tools," *Designing Software-Intensive Systems: Methods and Principles*, Edited by Dr. Pierre F. Tiako, Langston University, OK, April 2008.

B44 Gan Deng, Douglas C. Schmidt, Aniruddha Gokhale, Jeff Gray, Yuehua Lin, and Gunther Lenz, "Evolution in Model-Driven Software Product-line Architecture, *Designing Software-Intensive Systems: Methods and Principles*, Edited by Dr. Pierre F. Tiako, Langston University, OK, April 2008.

B43 Daniel G. Waddington, Nilabja Roy, and Douglas C. Schmidt, "Dynamic Analysis and Profiling of Multi-threaded Systems," *Designing Software-Intensive Systems: Methods and Principles*, Edited by Dr. Pierre F. Tiako, Langston University, OK, April 2008.

B42 Krishnakumar Balasubramanian, Douglas C. Schmidt, Zoltan Molnar, and Akos Ledeczi, "System Integration via Model-Driven Engineering," *Designing Software-Intensive Systems: Methods and Principles* Edited by Dr. Pierre F. Tiako, Langston University, OK, April 2008.

B41 James Hill, Douglas C. Schmidt,, and John Slaby, "System Execution Modeling Tools for Evaluating the Quality of Service of Enterprise Distributed Real-time and Embedded System",*Designing Software-Intensive Systems: Methods and Principles*, Edited by Dr. Pierre F. Tiako, Langston University, OK, April 2008.

B40 Gan Deng, Chris Gill, Douglas C. Schmidt, and Nanbor Wang, "QoS-enabled Component Middleware for Distributed Real-Time and Embedded Systems," Handbook of Real-Time and Embedded Systems (I. Lee, J. Leung, and S. Son, eds.), CRC Press, 2007.

B39 William Otte and Douglas C. Schmidt, "Labor-Saving Architecture: an Object-Oriented Framework for Networked Software," *Beautiful Code*, edited by Greg Wilson, O'Reilly, 2007.

BC38 Irfan Pyarali, Carlos O'Ryan, and Douglas C. Schmidt, "A Pattern Language for Efficient, Predictable, Scalable, and Flexible Dispatching Components," Pattern Language of Program Design 5 book, Addison-Wesley, Reading, MA, 2006.

BC37 Douglas C. Schmidt, Krishnakumar Balasubramanian, Arvind S. Krishna, Emre Turkay, and Aniruddha Gokhale, Model-driven Development of Component-based Distributed Real-time and Embedded Systems, Model Driven Engineering for Distributed Real-time and Embedded Systems, edited by Sebastien Gerard, Joel Champea, and Jean-Philippe Babau, Hermes, 2005.

BC36 Gabriele A. Trombetti, Aniruddha Gokhale, Douglas C. Schmidt, John Hatcliff, Gurdip Singh, and Jesse Greenwald, "An Integrated Model-driven Development Environment for Composing and Validating Distributed Real-time and Embedded Systems," *Model-driven Software Development: Volume II of Research and Practice in Software Engineering*, edited by Sami Beydeda, Matthias Book, and Volker Gruhn, Springer-Verlag, 2005.

BC35 Arvind S. Krishna, Douglas C. Schmidt, Ray Klefstad, and Angelo Corsaro, "Real-time CORBA Middleware," in *Middleware for Communications*, edited by Qusay Mahmoud, Wiley and Sons, New York, 2003.

BC34 Nanbor Wang, Douglas C. Schmidt, Aniruddha Gokhale, Craig Rodrigues, Balachandran Natarajan, Joseph P. Loyall, Richard E. Schantz, and Christopher D. Gill, "QoS-enabled Middleware," in *Middleware for Communications*, edited by Qusay Mahmoud, Wiley and Sons, New York, 2003.

BC33 Aniruddha Gokhale, Douglas C. Schmidt, Balachandran Natarajan, Jeff Gray, and Nanbor Wang, "Model Driven Middleware," in *Middleware for Communications*, edited by Qusay Mahmoud, Wiley and Sons, New York, 2003.

BC32 Jeff Gray, Janos Sztipanovits, Ted Bapty, Sandeep Neema, Aniruddha Gokhale, and Douglas C. Schmidt, "Two-level Aspect Weaving to Support Evolution of Model-Based Software," in *Aspect-Oriented Software Development,* edited by Robert Filman, Tzilla Elrad, Mehmet Aksit, and Siobhan Clarke, Reading, Massachusetts: Addison-Wesley, 2003.

BC31 Joseph K. Cross and Douglas C. Schmidt "Applying the Quality Connector Pattern to Optimize Distributed Real-time and Embedded Middleware," *Patterns and Skeletons for Parallel and Distributed Computing*, edited by Fethi Rabhi and Sergei Gorlatch, Springer Verlag, 2002.

BC30 Richard E. Schantz and Douglas C. Schmidt, "Middleware for Distributed Systems: Evolving the Common Structure for Network-centric Applications," *Encyclopedia of Software Engineering*, edited by John Marciniak and George Telecki, Wiley and Sons, 2001.

BC29 Sumedh Mungee, Nagarajan Surendran, Yamuna Krishnamurthy, and Douglas C. Schmidt "The Design and Performance of a CORBA Audio/Video Streaming Service," *Multimedia Networking: Technology, Management, and Applications*, edited by Mahbubur Syed, Idea Group Publishing, Hershey, USA, 2001.

BC28 Nanbor Wang, Douglas C. Schmidt, and Carlos O'Ryan "An Overview of the CORBA Component Model," *Component-Based Software Engineering*, (George Heineman and Bill Councill, eds.), Addison-Wesley, Reading, MA, 2001.

BC27 Douglas C. Schmidt, "Applying a Pattern Language to Develop Application-Level Gateways," Design Patterns in Communications, (Linda Rising, ed.), Cambridge University Press, 2000.

BC26 Douglas C. Schmidt and Chris Cleeland, "Applying a Pattern Language to Develop Extensible ORB Middleware," Design Patterns in Communications, (Linda Rising, ed.), Cambridge University Press, 2000.

BC25 Carlos O'Ryan, Fred Kuhns, Douglas C. Schmidt, and Jeff Parsons, "Applying Patterns to Develop a Pluggable Protocols Framework for Object Request Broker Middleware," Design Patterns in Communications, (Linda Rising, ed.), Cambridge University Press, 2000.

BC24 David L. Levine, Christopher D. Gill, and Douglas C. Schmidt, "Object Lifecycle Manager – A Complementary Pattern for Controlling Object Creation and Destruction," Design Patterns in Communications, (Linda Rising, ed.), Cambridge University Press, 2000.

BC23 Douglas C. Schmidt, "A Family of Design Patterns For Flexibly Configuring Network Services in Distributed Systems," Design Patterns in Communications, (Linda Rising, ed.), Cambridge University Press, 2000.

BC22 James Hu and Douglas C. Schmidt, "JAWS: A Framework for High-performance Web Servers," *Object-Oriented Application Frameworks* book, John Wiley & Sons, October, 1999.

BC21 Chris Cleeland and Douglas C. Schmidt, "External Polymorphism, An Object Structural Pattern for Transparently Extending C++ Concrete Data Types" in C++ Gems II, (Robert Martin, ed.), SIGS, NY, 1999.

BC20 Douglas C. Schmidt, "GPERF: A Perfect Hash Function Generator" in C++ Gems II, (Robert Martin, ed.), SIGS, NY, 1999.

BC19 Douglas C. Schmidt, Tim H. Harrison, and Nat Pryce, "Thread-specific Storage: an Object Behavioral Pattern for Efficiently Accessing per-Thread State" in C++ Gems II, (Robert Martin, ed.), SIGS, NY, 1999.

BC18 Irfan Pyarali, Tim Harrison, Douglas C. Schmidt, and Thomas Jordan, "Proactor: an Object Behavioral Pattern for Demultiplexing and Dispatching Handlers for Asynchronous Events," *Pattern Languages of Program Design,* (Harrison, Foote, and Rohnert, eds.), Addison-Wesley, Reading, MA, 1999.

BC17 Douglas C. Schmidt and Paul Stephenson, "Using Design Patterns to Evolve System Software from UNIX to Windows NT," In *The Patterns Handbook*, (Linda Rising, ed.), Cambridge University Press, 1998.

BC16 Douglas C. Schmidt, David L. Levine, and Chris Cleeland, "Architectures and Patterns for High-performance, Real-time CORBA Object Request Brokers," *Advances in Computers*, Academic Press, Ed., Marvin Zelkowitz, Volume 48, July 1999.

BC15 Douglas C. Schmidt and Tatsuya Suda, "A Framework for Measuring the Performance of Alternative Process Architectures for Parallel Communication Subsystems," in *Network Performance Modeling and Simulation*, Walrand, Bagchi, and Zobrist, Ed., Gordon and Breach Publishers, 1998.

BC14 Douglas C. Schmidt, "Applying Design Patterns and Frameworks to Develop Object-Oriented Communication Software," The Handbook of Programming Languages, Volume I, edited by Peter Salus, MacMillan Computer Publishing, 1997.

BC13 Chris Cleeland, Douglas C. Schmidt, and Tim H. Harrison, "External Polymorphism – An Object Structural Pattern for Transparently Extending Concrete Data Types," *Pattern Languages of Program Design,* (Martin, Buschmann, and Riehl, eds.), Addison-Wesley, Reading, MA, 1997.

BC12 Timothy H. Harrison, Douglas C. Schmidt, and Irfan Pyarali, "Asynchronous Completion Token – An Object Behavioral Pattern for Efficient Asynchronous Event Handling," *Pattern Languages of Program Design,* (Martin, Buschmann, and Riehl, eds.), Addison-Wesley, Reading, MA, 1997.

BC11 Douglas C. Schmidt and Timothy H. Harrison, "Double-Checked Locking – A Optimization Pattern for Efficiently Initializing and Accessing Thread-safe Objects," *Pattern Languages of Program Design,* (Martin, Buschmann, and Riehl, eds.), Addison-Wesley, Reading, MA, 1997.

BC10 Douglas C. Schmidt, "Acceptor and Connector – A Family of Object Creational Patterns for Initializing Communication Services," *Pattern Languages of Program Design,* (Martin, Buschmann, and Riehl, eds.), Addison-Wesley, Reading, MA, 1997.

BC9 Douglas C. Schmidt and Paul Stephenson, "Using Design Patterns to Evolve System Software from UNIX to Windows NT," In *Wisdom of the Gurus*, (Charles Bowman, ed.), Cambridge University Press, 1996.

BC8 Douglas C. Schmidt and Steve Vinoski, "Comparing Alternative Distributed Programming Techniques" in *Wisdom of the Gurus*, (Charles Bowman, ed.), Cambridge University Press, 1996.

BC7 Douglas C. Schmidt, "A Case Study in C++ Design Evolution" in *C++ Gems,* (Stanley Lippman, ed.), SIGS, NY, 1996, pp. 99-120.

BC6 Douglas C. Schmidt and Steve Vinoski, "Distributed Object Computing in C++" in *C++ Gems,* (Stanley Lippman, ed.), SIGS, NY, 1996, pp. 303-316.

BC5 Douglas C. Schmidt and Steve Vinoski, "Comparing Alternative Distributed Programming Techniques" in *C++ Gems,* (Stanley Lippman, ed.), SIGS, NY, 1996, pp. 316-336.

BC4 Douglas C. Schmidt and Steve Vinoski, "Comparing Alternative Server Programming Techniques" in *C++ Gems,* (Stanley Lippman, ed.), SIGS, NY, 1996, pp. 337-362.

BC3 Douglas C. Schmidt and Charles D. Cranor, "Half-Sync/Half-Async: A Architectural Pattern for Efficient and Well-structured Concurrent I/O" in *Pattern Languages of Program Design,* (Coplien, Vlissides, and Kerth, eds.), Addison-Wesley, Reading, MA, 1996.

BC2 R. Greg Lavender and Douglas C. Schmidt, "Active Object: An Object Behavioral Pattern for Concurrent Programming," in *Pattern Languages of Program Design,* (Coplien, Vlissides, and Kerth, eds.), Addison-Wesley, Reading, MA, 1996.

BC1 Douglas C. Schmidt, "Reactor: An Object Behavioral Pattern for Concurrent Event Demultiplexing and Event Handler Dispatching," *Pattern Languages of Program Design,* (Addison-Wesley, 1995), edited by James O. Coplien and Douglas C. Schmidt.

- **Refereed Conference Publications**

C195 Peng Zhang, Douglas C. Schmidt, and Jules White, "A Pattern Sequence for Designing Blockchain-Based Healthcare Information Technology Systems," the 26th Pattern Languages of Programming conference, October 7-10, 2019, Ottawa, Ontario, Canada.

C194 Nick Guertin, Douglas C. Schmidt, and Harry Levinson, "All Capability to All Boats, All the Time: Adding Options to the TI/APB Process," Proceedings of the 2018 Joint Undersea Warfare Technology Fall Conference, Groton, CT, September 18th, 2018.

C193 Zhongwei Teng, Peng Zhang, Xiao Li, William Nock, Marcelino Rodriguez-Cancio, Denis Gilmore, Jules White, Douglas C. Schmidt, and Jonathan C. Nesbitt, "Authentication and Usability in mHealth Apps," proceedings of the 2018 IEEE International Conference on E-health Networking, Application and Services (Healthcom), 17-20 September 2018, Ostrava,

Czech Republic (winner of the "Outstanding Paper" award).

C192 Peng Zhang, Douglas C. Schmidt, Jules White, and Shelagh A. Mulvaney, Towards Precision Behavioral Medicine with IoT: Iterative Design and Optimization of a Self-Management Tool for Type 1 Diabetes," proceedings of the 2018 IEEE International Conference on Healthcare Informatics (ICHI 2018), New York, NY, USA, June 4-7, 2018.

C191 Nick Guertin, Douglas C. Schmidt, and Bill Scherlis, "Capability Composition and Data Interoperability to Achieve More Effective Results than DoD System-of-Systems Strategies," proceedings of 15th Annual Acquisition Research Symposium, May 9-10, 2018 in Monterey, CA.

C190 Peng Zhang, Douglas C. Schmidt, Jules White, and Gunther Lenz, "Metrics for Assessing Blockchain-based Healthcare Decentralized Apps," Proceedings of the IEEE Healthcom 2017, October 12-15, 2017, Dalian, China.

C189 Peng Zhang, Jules White, Douglas C. Schmidt, and Gunther Lenz, "Design of Blockchain-Based Apps Using Familiar Software Patterns to Address Interoperability Challenges in Healthcare," the 24th Pattern Languages of Programming (PLoP) conference, October 22-25, 2017, Vancouver, Canada.

C188 Aron Laszka, Michael Walker, Abhishek Dubey and Douglas Schmidt, "Providing Privacy, Safety, and Security in IoT-Based Transactive Energy Systems using Distributed Ledgers," The 7th International Conference on the Internet of Things (IoT 2017), October 22-25, 2017, Linz, Austria.

C187 Fangzhou Sun, Peng Zhang, Jules White, Douglas C. Schmidt, Jacob Staples, and Lee Krause, A Feasibility Study of Autonomically Detecting In-process Cyber-Attacks, Proceedings of the 3rd IEEE International Conference on Cybernetics (CYBCONF-2017), Special Session on Cyber Security.

C186 Peng Zhang, Jules White, Douglas C. Schmidt, and Tom Dennis, "Discussions of a Preliminary Hand Hygiene Compliance Monitoring Application-as-a-Service", 10th International Conference on Health Informatics - HEALTHINF 2017, 21 - 23 February, 2017, Porto, Portugal.

C185 Peng Zhang, Jules White, Douglas C. Schmidt, and Tom Dennis, "Applying Machine Learning Methods to Predict Hand Hygiene Compliance Characteristics," Proceedings of the Biomedical and Health Informatics Conference, Orlando, Florida, February 16-19, 2017.

C184 Subhav Pradhan, Shweta Khare, Fangzhou Sun, Abhishek Dubey, Janos Sallai, Aniruddha Gokhale, Douglas Schmidt, Martin Lehofer, and Monika Sturm, "Towards a Distributed and Resilient Platform for Smart City Systems," First IEEE/ACM Symposium on Edge Computing, October 27-28, 2016, Washington DC.

C183 Peng Zhang, Jules White, and Douglas C. Schmidt, "HoliCoW: Automatically Breaking Team-based Software Projects to Motivate Student Testing," Proceedings to the Software Engineering Education and Training track at the 38th International Conference on Software Engineering Austin, TX, May 14 - 22, 2016.

C182 Nickolas H. Guertin, Robert Sweeney, and Douglas C. Schmidt, "How the Navy Can Use Open Systems Architecture to Revolutionize Capability Acquisition," Naval Postgraduate School's Acquisition Research Symposium, May 13th 2015, Monterey, CA.

C181 Nickolas H. Guertin, Robert Sweeney, and Douglas C. Schmidt, "Benefits of Applying an Open Systems Architecture Approach," 17th Systems Engineering Conference, National Defense Industry Association, October 27-30, 2014, Washington DC.

C180 Kyoungho An, Aniruddha Gokhale, Sumant Tambe, Gerardo Pardo-Castellote, and Douglas C. Schmidt, "Content-based Filtering Discovery Protocol (CFDP): Scalable and Efficient OMG DDS Discovery Protocol," 8th ACM International Conference on Distributed Event-Based Systems, Mumbai, India, May 26-29, 2014.

C179 Balakrishnan Dasarathy, Kevin Sullivan, Douglas C. Schmidt, Douglas H. Fisher, and Adam Porter, "The Past, Present, and Future of MOOCs and Their Relevance to Software Engineering," 36th ACM/IEEE International Conference on Software Engineering, Hyderabad, India, May 31 - June 7th, 2014.

C178 Rick Leathart, Adam Porter, Douglas Schmidt, Michael O'Hare, Harry Crisp, and Barry Laird, "Capability-Based Technical Reference Frameworks for Open System Architecture Implementations," Systems Engineering Conference (SEDC) 20134, Washington DC, April 3rd and 4th, 2014, Chantilly, VA.

C177 Douglas C. Schmidt, Chris Gill, and Jules White, "Elastic Infrastructure to Support Computing Clouds for Large-scale Cyber-Physical Systems," Proceedings of the International Symposium on Object-Oriented Real-time Distributed Computing (ISORC), June 2014, Reno, Nevada.

C176 Douglas C. Schmidt and Zach McCormick, "Creating and Teaching a MOOC on Pattern-Oriented Software Architecture for Concurrent and Networked Software," Proceedings of the WaveFront Forum at the SPLASH 2013 conference, October 2013, Indianapolis, IN.

C175 Zach McCormick and Douglas C. Schmidt, "Data Synchronization Patterns in Mobile Application Design," Proceedings of the Pattern Languages of Programs (PLoP) 2012 conference, October 19-21, 2012, Tucson, Arizona.

C174 James Edmondson, Aniruddha Gokhale and Douglas Schmidt, "Approximation Techniques for Maintaining Real-time Deployments Informed by User-provided Dataflows Within a Cloud," 31st International Symposium on Reliable Distributed Systems (SRDS 2012), 8th-11th October 2012, Irvine, California.

C173 James Edmondson, Douglas C. Schmidt, and Aniruddha Gokhale "QoS-enabled Distributed Mutual Exclusion in Public Clouds," Proceedings of the 1st International Symposium on Secure Virtual Infrastructures (DOA-SVI'11), October 17-19, 2011, Crete, Greece.

C172 Brian Dougherty, Jules White, Russell Kegley, Jonathan Preston, Douglas C. Schmidt, and Aniruddha Gokhale, "Optimizing Integrated Application Performance with Cache-aware Metascheduling," Proceedings of the 1st International Symposium on Secure Virtual Infrastructures (DOA-SVI'11), October 17-19, 2011, Crete, Greece.

C171 Akram Hakiri, Aniruddha Gokhale, Douglas C. Schmidt, Berthou Pascal, Joe Hoffert, and Gayraud Thierry, "A SIP-based Network QoS Provisioning Framework for Cloud-hosted DDS Applications," Proceedings of the 1st International Symposium on Secure Virtual Infrastructures (DOA-SVI'11), October 17-19, 2011, Crete, Greece.

C170 James Hill and Douglas C. Schmidt, "Experiences with Service-Oriented Middleware for Dynamic Instrumentation of Enterprise Distributed Real-time and Embedded Systems," Proceedings of the 1st International Symposium on Secure Virtual Infrastructures (DOA-SVI'11), October 17-19, 2011, Crete, Greece.

C169 Will Otte, Aniruddha Gokhale, Douglas C. Schmidt, and Johnny Willemsen, "Infrastructure for Component-based DDS Application Development," proceedings of the Tenth International Conference on Generative Programming and Component Engineering (GPCE'11), October 22-23, 2011 Portland, Oregon, USA.

C168 Will Otte, Aniruddha Gokhale, and Douglas C. Schmidt, Techniques for Predictable Deployment Latencies in Large-scale Component-based Distributed Real-time and Embedded Systems, Proceedings of the 14th International ACM SIGSOFT Symposium on Component Based Software Engineering (CBSE-2011), June 21th - 23th, 2011, in Boulder, Colorado, USA.

C167 Chris Thompson, Hamilton Turner, Jules White, and Douglas C. Schmidt, Analyzing Mobile Application Software Power Consumption via Model-Driven Engineering, Proceedings of the 1st International Conference on Pervasive and Embedded Computing and Communication Systems, Algarve, Portugal, March 5-7, 2011.

C166 Joe Hoffert, Douglas C. Schmidt, Aniruddha Gokhale, "Adapting Distributed Real-time and Embedded Publish/Subscribe Middleware for Cloud-Computing Environments," Proceedings of the ACM/IFIP/USENIX 11th International Middleware Conference, Bangalore, India, November 30-Dec 3, 2010.

C165 Joe Hoffert and Douglas Schmidt, "Evaluating Supervised Machine Learning for Adapting Enterprise DRE Systems," Proceedings of the International Symposium on Intelligence Information Processing and Trusted Computing (IPTC 2010), Huanggang City, China, October 28-29, 2010.

C164 J. Benjamin Gotow, Krzysztof Zienkiewicz, Jules White, and Douglas C. Schmidt, "Addressing Challenges in Delivering Augmented Reality Applications to Smartphones," Proceedings of the Third International ICST Conference on MOBILe Wireless MiddleWARE, Operating Systems, and Applications (Mobilware 2010), June 30-July 2, 2010, Chicago, IL.

C163 Chris Thompson, Jules White, Brian Dougherty, Adam Albright, and Douglas C. Schmidt, "Using Smartphones and Wireless Mobile Networks to Detect Car Accidents and Provide Situational Awareness to Emergency Responders," Proceedings of the Third International

ICST Conference on MOBILe Wireless MiddleWARE, Operating Systems, and Applications (Mobilware 2010), June 30-July 2, 2010, Chicago, IL.

C162 James H. Hill, Hunt Sutherland, Douglas C. Schmidt, Thomas Silveria, John M. Slaby, Paul Staudinger, and Nikita A. Visnevski, "OASIS: A Service-Oriented Architecture for Dynamic Instrumentation of Enterprise Distributed Real-time and Embedded Systems," Proceedings of the 13th International Symposium on Object/Component/Service-oriented Real-time Distributed Computing (ISORC '10), May 5-6, 2010, Carmona, Spain.

C161 Joseph P. Loyall, Matthew Gillen, Aaron Paulos, Larry Bunch, Marco Carvalho, James Edmondson, Pooja Varshneya, Douglas C. Schmidt, Andrew Martignoni, "Dynamic Policy-Driven Quality of Service in Service-Oriented Systems," Proceedings of the 13th International Symposium on Object/Component/Service-oriented Real-time Distributed Computing (ISORC '10), May 5-6, 2010, Carmona, Spain.

C160 Jaiganesh Balasubramanian, Aniruddha Gokhale, Abhishek Dubey, Friedhelm Wolf, Chenyang Lu, Chris Gill, and Douglas C. Schmidt, "Middleware for Resource-Aware Deployment and Configuration of Fault-tolerant Real-time Systems," Proceedings of the 16th IEEE Real-Time and Embedded Technology and Applications Symposium Stockholm, Sweden, April 12 - 15, 2010.

C159 John S. Kinnebrew, Daniel L. C. Mack, Gautam Biswas, Douglas C. Schmidt, "Coordination of Planning and Scheduling Techniques for a Distributed, Multi-level, Multi-agent System", Proceedings of the 2nd International Conference on Agents and Artificial Intelligence (ICAART), Valencia, Spain, January 22-24, 2010.

C158 Nilabja Roy, Yuan Xue, Aniruddha Gokhale, Larry Dowdy and Douglas C. Schmidt, "A Component Assignment Framework for Improved Capacity and Assured Performance inWeb Portals," Proceedings of the 11th International Symposium on Distributed Objects, Middleware, and Applications (DOA'09) Vilamoura, Algarve-Portugal, Nov 01 - 03, 2009.

C157 Joe Hoffert, Douglas C. Schmidt, and Aniruddha Gokhale, "Evaluating Transport Protocols for Real-time Event Stream Processing Middleware and Applications," Proceedings of the 11th International Symposium on Distributed Objects, Middleware, and Applications (DOA'09) Vilamoura, Algarve-Portugal, Nov 01 - 03, 2009.

C156 Joe Hoffert and Douglas C. Schmidt, "Maintaining QoS for Publish/Subscribe Middleware in Dynamic Environments," Fast Abstract, 3rd ACM International Conference on Distributed Event-Based Systems (DEBS 2009) July 6-9, 2009 - Nashville, TN, USA.

C155 Nilabja Roy, Larry Dowdy, and Douglas C. Schmidt, "The Impact of Variability on Soft Real-Time System Scheduling," Proceedings of the 15th IEEE International Conference on Embedded and Real-Time Computing Systems and Applications (RTCSA 2009), Beijing, China, August 24-26, 2009.

C154 Friedhelm Wolf, Jaiganesh Balasubramanian, Aniruddha Gokhale, and Douglas C. Schmidt, "Component Replication based on Failover Units," Proceedings of the 15th IEEE International Conference on Embedded and Real-Time Computing Systems and Applications (RTCSA 2009), Beijing, China, August 24-26, 2009.

C153 Jules White, David Benavides, Brian Dougherty, Douglas C. Schmidt, "Automated Reasoning for Multi-step Software Product-line Configuration Problems," Proceedings of the 13th International Software Product Line Conference (SPLC 2009) August 24-28, 2009, San Francisco, CA.

C152 Joseph Loyall, Marco Carvalho, Douglas Schmidt, Matthew Gillen, Andrew Martignoni III, Larry Bunch, James Edmondson, and David Corman, "QoS Enabled Dissemination of Managed Information Objects in a Publish-Subscribe-Query Information Broker," the SPIE Defense Transformation and Net-Centric Systems conference, April, 2009, Orlando, FL.

C151 Brian Dougherty, Jules White, Jaiganesh Balasubramanian, Chris Thompson, and Douglas C. Schmidt, "Deployment Automation with BLITZ," Proceedings of the Emerging Results track at the 31st International Conference on Software Engineering, Vancouver, Canada, May 16-24, 2009.

C150 Brian Dougherty, Jules White, Chris Thompson, and Douglas C. Schmidt, "Automating Hardware and Software Evolution Analysis," Proceedings of the 16th Annual IEEE International Conference and Workshop on the Engineering of Computer Based Systems (ECBS), April 13-16, 2009, San Francisco, CA USA.

C149 James H. Hill, Hamilton A. Turner, James R. Edmondson, and Douglas C. Schmidt, "Unit Testing Non-functional Concerns of Component-based Distributed Systems," Proceedings of the 2nd International Conference on Software Testing, Verification, and Validation, April 1 - 4, 2009, Denver, Colorado.

C148 John S. Kinnebrew, William R. Otte, Nishanth Shankaran, Gautam Biswas, and Douglas C. Schmidt, "Intelligent Resource Management and Dynamic Adaptation in a Distributed Real-time and Embedded Sensor Web System," Proceedings of the 12th International Symposium on Object/Component/Service-oriented Real-time Distributed Computing (ISORC '09), Tokyo, Japan, March 17-20, 2009.

C147 Jaiganesh Balasubramanian, Sumant Tambe, Chenyang Lu, Aniruddha Gokhale, Christopher Gill, and Douglas C. Schmidt, "Adaptive Failover for Real-time Middleware with Passive Replication, Proceedings of the 15th Real-time and Embedded Applications Symposium (RTAS) 2009, San Francisco, CA, United States, April 13 - 16, 2009.

C146 William R. Otte, John. S. Kinnebrew, Douglas C. Schmidt, and Gautam Biswas, "A Flexible Infrastructure for Distributed Deployment in Adaptive Sensor Webs," Proceedings of the 2009 IEEE Aerospace Conference, Big Sky, Montana, March 2009.

C145 Nanbor Wang, Douglas C. Schmidt, Angelo Corsaro, and Hans Van'T Hag, "Toward an Adaptive Data Distribution Service for Dynamic Large-Scale Network-Centric Operation and Warfare Systems," Proceedings of the 2008 Military Communications Conference, November 17-19, 2008 in San Diego, CA.

C144 Joe Hoffert, Douglas C. Schmidt, and Aniruddha Gokhale, "DQML: A Modeling Language for Configuring Publish/Subscribe Quality of Service Policies," Proceedings of the Distributed Objects, Middleware, and Applications (DOA'08), Monterrey, Mexico, Nov 10 - 12, 2008.

C143 Nilabja Roy, Akshay Dabholkar, Nathan Hamm, Larry Dowdy and Douglas Schmidt, "Modeling Software Contention using Colored Petri Nets," Proceedings of the 16th Annual Meeting of the IEEE International Symposium on Modeling, Analysis, and Simulation of Computer and Telecommunication Systems (MASCOTS), September 8-10 2008, Baltimore, MD.

C142 Jules White, Douglas C. Schmidt, David Benavides, Pablo Trinidad, Antonio Ruiz-Cortez, "Automated Diagnosis of Product-line Configuration Errors in Feature Models," Proceedings of the Software Product Lines Conference (SPLC), September, 2008, Limerick, Ireland.

C141 Jules White and Douglas C. Schmidt, "Model-Driven Product-Line Architectures for Mobile Devices," Proceedings of the 17th Annual Conference of the International Federation of Automatic Control, Seoul, Korea, July 6-11, 2008.

C140 Jules White and Douglas C. Schmidt, "Automated Configuration of Component-based Distributed Real-time and Embedded Systems from Feature Models," Proceedings of the 17th Annual Conference of the International Federation of Automatic Control, Seoul, Korea, July 6-11, 2008.

C139 William R. Otte, John. S. Kinnebrew, Douglas C. Schmidt, Gautam Biswas, and Dipa Suri, "Application of Middleware and Agent Technologies to a Representative Sensor Network," Proceedings of the 2008 Earth Science Technology Conference, June 24-26, 2008, University of Maryland.

C138 Jai Balasubramanian, Aniruddha Gokhale, Douglas C. Schmidt, and Nanbor Wang, "Towards Middleware for Fault-tolerance in Distributed Real-time and Embedded Systems," Proceedings of the 8th IFIP International Conference on Distributed Applications and Interoperable Systems (DAIS 2008), Oslo, Norway, June 4-6, 2008.

C137 Serena Fritsch, Aline Senart, Douglas C. Schmidt, and Siobhan Clarke, "Time-bounded Adaptation for Automotive System Software," Proceedings of the Experience Track on Automotive Systems at the 30th International Conference on Software Engineering, Leipzig, Germany, 10 - 18 May 2008.

C136 Nilabja Roy, John S. Kinnebrew, Nishanth Shankaran, Gautam Biswas, and Douglas C. Schmidt, "Toward Effective Multi-capacity Resource Allocation in Distributed Real-time and Embedded Systems," Proceedings of the 11th IEEE International Symposium on Object/-Component/Service-oriented Real-time Distributed Computing, Orlando, Florida, May 5-7, 2008.

C135 Gan Deng, Douglas C. Schmidt, and Aniruddha Gokhale, "CaDANCE: A Criticality-Aware Deployment And Configuration Engine," Proceedings of the 11th IEEE International Sym-

posium on Object/Component/Service-oriented Real-time Distributed Computing, Orlando, Florida, May 5-7, 2008.

C134 Krishnakumar Balasubramanian and Douglas C. Schmidt, "Physical Assembly Mapper: A Model-driven Optimization Tool for QoS-enabled Component Middleware," Proceedings of 14th IEEE Real-Time and Embedded Technology and Applications Symposium, St. Louis, MO, United States, April 22 - April 24, 2008.

C133 Jaiganesh Balasubramanian, Sumant Tambe, Balakrishnan Dasarathy, Shrirang Gadgil, Frederick Porter, Aniruddha Gokhale, and Douglas C. Schmidt, "NetQoPE: A Model-driven Network QoS Provisioning Engine for Distributed Real-time and Embedded Systems," Proceedings of 14th IEEE Real-Time and Embedded Technology and Applications Symposium, St. Louis, MO, United States, April 22 - April 24, 2008.

C132 James Hill, Douglas C. Schmidt, John Slaby, and Adam Porter, "CiCUTS: Combining System Execution Modeling Tools with Continuous Integration Environments," Proceedings of the 15th Annual IEEE International Conference and Workshops on the Engineering of Computer Based Systems (ECBS), March 31st - 4th April, 2008 Belfast, Northern Ireland.

C131 Vinny Cahill, Aline Senart, Douglas C. Schmidt, Stefan Weber, Anthony Harrington, Barbara Hughes, and Kulpreet Singh, "The Managed Motorway: Real-time Vehicle Scheduling: A Research Agenda," Proceedings of the ACM HotMobile 2008, Silverado Resort, Napa Valley, CA, USA February 25-26, 2008.

C130 Jules White, Krzysztof Czarnecki, Douglas Schmidt, Gunther Lenz, Christoph Wienands, Egon Wuchner, Ludger Fiege, "Automated Model-based Configuration of Enterprise Java Applications," The 11th IEEE International EDOC Conference (EDOC 2007), 15-19 October 2007, Annapolis, Maryland U.S.A.

C129 Joe Hoffert, Douglas Schmidt, and Aniruddha Gokhale, "A QoS Policy Configuration Modeling Language for Publish/Subscribe Middleware Platforms," Proceedings of International Conference on Distributed Event-Based Systems (DEBS), June 20-22nd, 2007, Toronto, Canada.

C128 Shanshan Jiang, Yuan Xue, and Douglas Schmidt, "Minimum Disruption Service Composition and Recovery in Mobile Ad hoc Networks, Proceedings of the 4th Annual International Conference on Mobile and Ubiquitous Systems: Computing, Networking and Services (MOBIQUITOUS 2007), August 6-10, 2007 - Philadelphia, PA.

C127 Jules White, Andrey Nechypurenko, Egon Wuchner, and Douglas C. Schmidt, "Optimizing and Automating Product-Line Variant Selection for Mobile Devices," Proceedings of the 11th International Software Product Line Conference, Kyoto, Japan, Sept 10-14, 2007.

C126 Nishanth Shankaran, Douglas C. Schmidt, Yingming Chen, Xenofon Koutsoukous, and Chenyang Lu, The Design and Performance of Configurable Component Middleware for End-to-End Adaptation of Distributed Real-time Embedded Systems, proceedings of the 10th IEEE International Symposium on Object/Component/Service-oriented Real-time Distributed Computing, May 7-9, 2007, Santorini Island, Greece.

C125 Amogh Kavimandan, Krishnakumar Balasubramanian, Nishanth Shankaran, Aniruddha Gokhale, and Douglas C. Schmidt, QUICKER: A Model-driven QoS Mapping Tool, proceedings of the 10th IEEE International Symposium on Object/Component/Service-oriented Real-time Distributed Computing (ISORC), May 7-9, 2007, Santorini Island, Greece.

C124 Krishnakumar Balasubramanian, Douglas C. Schmidt, Zoltan Molnar, and Akos Ledeczi, Component-based System Integration via (Meta)Model Composition, Proceedings of the 14th Annual IEEE International Conference and Workshop on the Engineering of Computer Based Systems (ECBS), March 26th-29th, 2007, Tucson, Arizona.

C123 Joe Hoffert, Shanshan Jiang, and Douglas C. Schmidt, "A Taxonomy of Discovery Services and Gap Analysis for Ultra-Large Scale Systems," Proceedings of the ACMSE 2007: 45th ACM Southeast Conference Winston-Salem, North Carolina, USA March 23-24, 2007.

C122 Andrey Nechypurenko, Egon Wuchner, Jules White, and Douglas C. Schmidt, Application of Aspect-based Modeling and Weaving for Complexity Reduction in Development of Automotive Distributed Realtime Embedded System, Proceedings of the Sixth ACM International Conference on Aspect-Oriented Software Development, Vancouver, British Columbia, March 12-16, 2007.

C121 Dipa Suri, Adam Howell, Douglas C. Schmidt, Gautam Biswas, John Kinnebrew, Will Otte, and Nishanth Shankaran, "A Multi-agent Architecture for Smart Sensing in the NASA Sensor

Web," Proceedings of the 2007 IEEE Aerospace Conference Big Sky, Montana, March 3-10, 2007.

C120 John S. Kinnebrew, Ankit Gupta, Nishanth Shankaran, Gautam Biswas, and Douglas C. Schmidt, A Decision-Theoretic Planner with Dynamic Component Reconfiguration for Distributed Real-Time Applications, Proceedings of the The 8th International Symposium on Autonomous Decentralized Systems (ISADS 2007) Sedona, Arizona, Wednesday March 21 - Friday March 23, 2007.

C119 Ming Xiong, Jeff Parsons, James Edmondson, and Douglas C. Schmidt, "Evaluating Technologies for Tactical Information Management in Net-Centric Systems, Proceedings of the Defense Transformation and Net-Centric Systems conference, April 9-13, 2007, Orlando, Florida.

C118 Nilabja Roy, Nishanth Shankaran, and Douglas C. Schmidt "Target Manager: A Resource Provisioning Service for Enterprise Distributed Real-time and Embedded Systems," Proceedings of the International Symposium on Distributed Objects and Applications (DOA), Montpellier, France, Oct 29 - Nov 3, 2006.

C117 James Hill, John Slaby, Steve Baker, and Douglas C. Schmidt, "Evaluating Enterprise Distributed Real-time and Embedded System Quality of Service with System Execution Modeling Tools," Proceedings of the 12th IEEE International Conference on Embedded and Real-Time Computing Systems and Applications, Sydney, Australia, 16-18 August 2006.

C116 Nishanth Shankaran, Xenofon Koutsoukos, Chenyang Lu, Douglas C. Schmidt, and Yuan Xue, "Hierarchical Control of Multiple Resources in Distributed Real-time and Embedded Systems," Proceedings of the 18th Euromicro Conference on Real-Time Systems (ECRTS 06), Dresden, Germany, July 5-7, 2006.

C115 Dipa Suri, Adam Howell, Nishanth Shankaran, John Kinnebrew, Will Otte, Doug Schmidt, and Gautam Biswas, "Onboard Processing using the Adaptive Network Architecture", Proceedings of the Sixth annual NASA Earth Science Technology Conference MD, June 27th - 29th, 2006, College Park, MD.

C114 Gan Deng, Douglas C. Schmidt, Aniruddha Gokhale, and Andrey Nechypurenko, "Modularizing Variability and Scalability Concerns in Distributed Real-time and Embedded Systems with Modeling Tools and Component Middleware, Proceedings of the 9th IEEE International Symposium on Object-oriented Real-time Distributed Computing (ISORC '06), April 24-26, 2006, Gyeongju, Korea.

C113 Stoyan Paunov and Douglas C. Schmidt, "RepoMan: A Component Repository Manager for Enterprise Distributed Real-time and Embedded Systems", Proceedings of the 44th ACM Southeast Conference, Melbourne, FL, March 10-12, 2006.

C112 Arvind S. Krishna, Aniruddha Gokhale, Douglas C. Schmidt, John Hatcliff, and Venkatesh Prasad Ranganat, "Context-Specific Middleware Specialization Techniques for Optimizing Software Product-line Architectures," Proceedings of ACM EuroSys 2006, Leuven, Belgium, April 18-21, 2006.

C111 Stoyan Paunov, James Hill, Douglas C. Schmidt, John Slaby, and Steve Baker, "Domain-Specific Modeling Languages for Configuring and Evaluating Enterprise DRE System Quality of Service," Proceedings of the 13th Annual IEEE International Conference and Workshop on the Engineering of Computer Based Systems (ECBS '06), March 27th-30th, 2006, University of Potsdam, Potsdam, Germany.

C110 Arvind S. Krishna, Aniruddha Gokhale, Douglas C. Schmidt, John Hatcliff, and Venkatesh Prasad Ranganat, "Towards Highly Optimized Real-time Middleware for Software Product-line Architectures," Proceedings of the Work-In-Progress session at the 26th IEEE Real-Time Systems Symposium, December 5-8, 2005, Miami, Florida.

C109 Gan Deng, Jaiganesh Balasubramanian, William Otte, Douglas C. Schmidt, and Aniruddha Gokhale, DAnCE: A QoS-enabled Component Deployment and Configuration Engine, Proceedings of the 3rd Working Conference on Component Deployment, Grenoble, France, November 28-29, 2005, p. 67-82.

C108 Jaiganesh Balasubramanian, Balachandran Natarajan, Douglas C. Schmidt, Aniruddha Gokhale, Gan Deng, and Jeff Parsons, "Evaluating Techniques for Dynamic Component Updating," Proceedings of the International Symposium on Distributed Objects and Applications (DOA), Agia Napa, Cyprus, Oct 31 - Nov 4, 2005, p. 978-996.

C107 Jules White, Douglas Schmidt, and Aniruddha Gokhale, "Simplifying Autonomic Enterprise Java Bean Applications via Model-driven Development: a Case Study," Proceedings of MODELS 2005, ACM/IEEE 8th International Conference on Model Driven Engineering Languages and Systems, Half Moon Resort, Montego Bay, Jamaica, October 5-7, 2005, p. 601-615.

C106 Arvind Krishna, Douglas C. Schmidt, and Michael Stal, "Context Object A Design Pattern for Efficient Middleware Request Processing," Proceedings of the 12th Pattern Language of Programming Conference, Allerton Park, Illinois, September 7-10, 2005.

C105 Michael Stal and Douglas C. Schmidt, "Activator," Proceedings of the 12th Pattern Language of Programming Conference, Allerton Park, Illinois, September 7-10, 2005.

C104 Jules White, Boris Kolpackov, Balachandran Natarajan, and Douglas C. Schmidt, "Reducing Code Complexity With Vocabulary-Specific XML Language Bindings," Proceedings of the 43nd ACM Southeastern conference in Atlanta, GA, March 2005.

C103 Cemal Yilmaz, Arvind Krishna, Atif Memon, Adam Porter, Douglas C. Schmidt, Aniruddha Gokhale, and Bala Natarajan, "A Distributed Continuous Quality Assurance Process for Monitoring Performance Degradation in Evolving Software Systems, proceedings of the 27th International Conference on Software Engineering, St. Louis, MO, May 15-21, 2005, p. 293-302.

C102 Arvind S. Krishna, Emre Turkay, Aniruddha Gokhale, and Douglas C. Schmidt, Model-Driven Techniques for Evaluating the QoS of Middleware Configurations for DRE Systems, Proceedings of the 11th IEEE Real-Time and Embedded Technology and Applications Symposium, San Francisco, CA, March 2005, p. 180-189.

C101 Krishnakumar Balasubramanian, Jaiganesh Balasubramanian, Jeff Parsons, Aniruddha Gokhale, and Douglas C. Schmidt, "A Platform-Independent Component Modeling Language for Distributed Real-time and Embedded Systems," Proceedings of the 11th IEEE Real-Time and Embedded Technology and Applications Symposium, San Francisco, CA, March 2005, p. 190-199.

C100 Nanbor Wang, Christopher Gill, Douglas C. Schmidt, and Venkita Subramonian, "Configuring Real-time Aspects in Component Middleware," Proceedings of the Conference on Distributed Objects and Applications (DOA 2004), October 25-29, 2004, Cyprus, Greece.

C99 Jaiganesh Balasubramanian, Douglas C. Schmidt, Lawrence Dowdy, and Ossama Othman, "Evaluating the Performance of Middleware Load Balancing Strategies," Proceedings of the 8th International IEEE Enterprise Distributed Object Computing Conference, Monterey, California, September 20-24, 2004.

C98 George Edwards, Gan Deng, Douglas C. Schmidt, Aniruddha Gokhale, and Balachandran Natarajan, "Model-driven Configuration and Deployment of Component Middleware Publisher/Subscriber Services," Proceedings of the 3rd ACM International Conference on Generative Programming and Component Engineering, Vancouver, CA, October 2004.

C97 Andrey Nechypurenko, Douglas C. Schmidt, Tao Lu, Gan Deng, Emre Turkey, and Aniruddha Gokhale, "Concern-based Composition and Reuse of Distributed Systems," Proceedings of the 8th International Conference on Software Reuse, ACM/IEEE, Madrid, Spain, July 2004.

C96 Arvind Krishna, Douglas C. Schmidt, Adam Porter, Atif Memon, Diego Sevilla-Ruiz, "Improving the Quality of Performance-intensive Software via Model-integrated Distributed Continuous Quality Assurance," Proceedings of the 8th International Conference on Software Reuse, ACM/IEEE, Madrid, Spain, July 2004.

C95 Chris Gill, Jeanna M. Gossett, David Corman, Joseph P. Loyall, Richard E. Schantz, Michael Atighetchi, and Douglas C. Schmidt, "Integrated Adaptive QoS Management in Middleware: An Empirical Case Study," Proceedings of the 10th Real-time Technology and Application Symposium, May 25-28, 2004, Toronto, CA.

C94 Pradeep Gore, Douglas C. Schmidt, Chris Gill, and Irfan Pyarali, "The Design and Performance of a Real-time Notification Service," Proceedings of the 10th IEEE Real-time Technology and Application Symposium (RTAS '04), Toronto, CA, May 2004.

C93 Yamuna Krishnamurthy, Chris Gill, Douglas C. Schmidt, Irfan Pyarali, Louis Mgeta, Yuanfang Zhang, and Stephen Torri, "The Design and Performance of Real-time CORBA 2.0: Dynamic Scheduling in TAO," Proceedings of the 10th IEEE Real-time Technology and Application Symposium (RTAS '04), Toronto, CA, May 2004.

C92 Arvind S. Krishna, Nanbor Wang, Balachandran Natarajan, Aniruddha Gokhale, Douglas C. Schmidt and Gautam Thaker, "CCMPerf: A Benchmarking Tool for CORBA Component Model Implementations," Proceedings of the 10th IEEE Real-time Technology and Application Symposium (RTAS '04), Toronto, CA, May 2004.

C91 George Edwards, Douglas C. Schmidt, Aniruddha Gokhale, and Bala Natarajan, Integrating Publisher/Subscriber Services in Component Middleware for Distributed Real-time and Embedded Systems, Proceedings of the 42nd ACM Southeastern conference in Huntsville, AL, April 2004.

C90 Atif Memon, Adam Porter, Cemal Yilmaz, Adithya Nagarajan, Douglas C. Schmidt, and Bala Natarajan, "Skoll: Distributed Continuous Quality Assurance," Proceedings of the 26th IEEE/ACM International Conference on Software Engineering, Edinburgh, Scotland, May 2004.

C89 Arvind Krishna, Douglas C. Schmidt, and Raymond Klefstad, "Enhancing Real-Time CORBA via Real-Time Java," Proceedings of the 24th IEEE International Conference on Distributed Computing Systems (ICDCS), March 23-26, 2004, Tokyo, Japan.

C88 Arvind Krishna, Douglas C. Schmidt, Krishna Raman, and Raymond Klefstad, "Enhancing Real-time CORBA Predictability and Performance," Proceedings of the 5th International Symposium on Distributed Objects and Applications (DOA), Catania, Sicily, November 2003.

C87 Jeff Gray, Ted Bapty, Sandeep Neema, Douglas C. Schmidt, Aniruddha Gokhale, and Balachandran Natarajan, "An Approach for Supporting Aspect-Oriented Domain Modeling, Proceedings of the 2nd Generative Programming and Component Engineering (GPCE '03) conference, Erfurt, Germany, September 22-25, 2003.

C86 Richard E. Schantz, Joseph P. Loyall, Douglas C. Schmidt, Craig Rodrigues, Yamuna Krishnamurthy, and Irfan Pyarali, "Flexible and Adaptive QoS Control for Distributed Real-time and Embedded Middleware," Proceedings of Middleware 2003, 4th IFIP/ACM/USENIX International Conference on Distributed Systems Platforms, June 16-20, 2003, Rio de Janeiro, Brazil.

C85 Arvind Krishna, Douglas C. Schmidt, Raymond Klefstad, and Angelo Corsaro, "Towards Predictable Real-time Java Object Request Brokers," Proceedings of the 9th IEEE Real-time/Embedded Technology and Applications Symposium (RTAS), Washington DC, May 28-30, 2003.

C84 Douglas C. Schmidt and Frank Buschmann, "Patterns, Frameworks, and Middleware: Their Synergistic Relationships," Proceedings of the IEEE/ACM International Conference on Software Engineering, Portland, Oregon, May 3-10, 2003.

C83 Radu Cornea, Nikil Dutt, Rajesh Gupta, Ingolf Krueger, Alex Nicolau, Douglas C. Schmidt, and Sandeep Shukla, "FORGE: A Framework for Optimization of Distributed Embedded Systems Software," International Parallel and Distributed Processing Symposium, Nice, France, April 22-26 2003.

C82 Raymond Klefstad, Sumita Rao, and Douglas C. Schmidt, "Design and Performance of a Dynamically Configurable, Messaging Protocols Framework for Real-time CORBA," Proceedings of the Distributed Object and Component-based Software Systems part of the Software Technology Track at the 36th Annual Hawaii International Conference on System Sciences, January 6–9, 2003, Big Island of Hawaii.

C81 Raymond Klefstad, Arvind S. Krishna, and Douglas C. Schmidt, "Design and Performance of a Modular Portable Object Adapter for Distributed, Real-Time, Embedded CORBA Applications," Proceedings of the Distributed Objects and Applications (DOA) conference, Irvine, CA, October/November, 2002.

C80 Chris Gill, Fred Kuhns, Douglas C. Schmidt, and Ron Cytron, "Empirical Differences Between COTS Middleware Scheduling Paradigms," Proceedings of the Distributed Objects and Applications (DOA) conference, Irvine, CA, October/November, 2002.

C79 Angelo Corsaro and Douglas C. Schmidt, "jRate: The Chameleonic Real-Time Java Implementation," Proceedings of the Distributed Objects and Applications (DOA) conference, Irvine, CA, October/November, 2002.

C78 Mayur Deshpande, Douglas C. Schmidt, Carlos O'Ryan, and Darrell Brunsch, "The Design and Performance of Asynchronous Method Handling for CORBA," Proceedings of the Distributed Objects and Applications (DOA) conference, Irvine, CA, October/November, 2002.

C77 Irfan Pyarali, Douglas C. Schmidt, and Ron Cytron, "Achieving End-to-End Predictability of the TAO Real-time CORBA ORB," Proceedings of the 8th IEEE Real-Time Technology and Applications Symposium, San Jose, CA, September 2002.

C76 Angelo Corsaro and Douglas C. Schmidt, "Evaluating Real-Time Java Features and Performance for Real-time Embedded Systems," Proceedings of the 8th IEEE Real-Time Technology and Applications Symposium, San Jose, CA, September 2002.

C75 Angelo Corsaro, Douglas C. Schmidt, Raymond Klefstad, and Carlos O'Ryan, "Virtual Component: a Design Pattern for Memory-Constrained Embedded Applications," Proceedings of the 9th Annual Conference on the Pattern Languages of Programs, Monticello, Illinois, September, 2002.

C74 Joseph K. Cross and Douglas C. Schmidt, "Quality Connector: A Pattern Language for Provisioning and Managing Quality-Constrained Services in Distributed Real-time and Embedded Systems Proceedings of the 9th Annual Conference on the Pattern Languages of Programs, Monticello, Illinois, September, 2002.

C73 Richard Schantz, Franklin Webber, Partha Pal, Joseph Loyall, and Douglas C. Schmidt, "Protecting Applications Against Malice with Adaptive Middleware," Certification and Security in E-Services stream of the 17th IFIP World Computer Congress, Montreal, Canada, August 25-30, 2002.

c72 Richard Schantz and Douglas C. Schmidt, "Research Advances in Middleware for Distributed Systems: State of the Art," Computer Communications stream of the 17th IFIP World Computer Congress, Montreal, Canada, August 25-30, 2002.

C71 Raymond Klefstad, Douglas C. Schmidt, and Carlos O'Ryan, "Towards Highly Configurable Real-time Object Request Brokers," the IEEE International Symposium on Object-Oriented Real-time Distributed Computing (ISORC), Washington DC, April 29–May 1, 2002.

C70 Angelo Corsaro, Douglas C. Schmidt, Chris Gill, and Ron Cytron, "Formalizing Meta-Programming Techniques to Reconcile Heterogeneous Scheduling Policies in Open Distributed Real-Time Systems," Proceedings of the 3rd International Symposium on Distributed Objects and Applications, September 8-10, 2001, Rome, Italy.

C69 David A. Karr, Craig Rodrigues, Yamuna Krishnamurthy, Irfan Pyarali, and Douglas C. Schmidt "Application of the QuO Quality-of-Service Framework to a Distributed Video Application," Proceedings of the 3rd International Symposium on Distributed Objects and Applications, September 8-10, 2001, Rome, Italy.

C68 Nanbor Wang, Kirthika Parameswaran, and Douglas C. Schmidt, "The Design and Performance of Meta-Programming Mechanisms for Object Request Broker Middleware," Proceedings of the 6th USENIX Conference on Object-Oriented Technologies and Systems (COOTS), San Antonio, TX, Jan/Feb, 2001.

C67 Andy Gokhale, Bala Natarajan, Douglas C. Schmidt and Shalini Yajnik, "Applying Patterns to Improve the Performance of Fault-Tolerant CORBA," of the 7th International Conference on High Performance Computing (HiPC 2000), ACM/IEEE, Bangalore, India, December 2000.

C66 Nanbor Wang, Michael Kircher, and Douglas C. Schmidt, "Applying Reflective Techniques to Optimize a QoS-enabled CORBA Component Model Implementation, the 24th Annual International Computer Software and Applications Conference (COMPSAC 2000), Taipai, Taiwan, October 25-27 2000.

C65 Frederic Andres, Nicolas Dessaigne, Jose Martinez, Noureddine Mouaddib, Kinji Ono, Douglas C. Schmidt, Panrit Tosukhowong, "MISE: The MediaSys Image Search Engine," 11th International Conference on Database and Expert Systems Applications (DEXA 2000), London, UK, September 2000.

C64 Andy Gokhale, Bala Natarajan, Douglas C. Schmidt and Shalini Yajnik, "DOORS: Towards High-performance Fault-Tolerant CORBA," Proceedings of the 2nd International Symposium on Distributed Objects and Applications (DOA '00), OMG, Antwerp, Belgium, September 2000.

C63 Irfan Pyarali, Carlos O'Ryan, Douglas C. Schmidt, "A Pattern Language for Efficient, Predictable, Scalable, and Flexible Dispatching Components," Proceedings of the 7th Pattern Language of Programming Conference, Monticello, Illinois, August, 2000.

C62 Douglas C. Schmidt, Carlos O'Ryan, Irfan Pyarali, Michael Kircher and Frank Buschmann, "Leader/Followers: A Design Pattern for Efficient Multi-threaded Event Demultiplexing and

Dispatching," Proceedings of the 7th Pattern Languages of Programming Conference, Monticello, Illinois, August 2000.

C61 Carlos O'Ryan, Douglas C. Schmidt, Fred Kuhns, Marina Spivak, Jeff Parsons Irfan Pyarali, and David L. Levine, "Evaluating Policies and Mechanisms for Supporting Embedded, Real-Time Applications with CORBA 3.0," Proceedings of the Sixth IEEE Real-Time Technology and Applications Symposium (RTAS'00), Washington D.C., USA, May 31-June 2, 2000.

C60 Nanbor Wang, Douglas C. Schmidt, and David Levine, "Optimizing the CORBA Component Model for High-performance and Real-time Applications," Work-in-progress session of the IFIP/ACM Middleware 2000 Conference, Pallisades, New York, April 3-7, 2000.

C59 Alexander B. Arulanthu, Carlos O'Ryan, Douglas C. Schmidt, Michael Kircher, and Jeff Parsons, "The Design and Performance of a Scalable ORB Architecture for CORBA Asynchronous Messaging," Proceedings of the IFIP/ACM Middleware 2000 Conference, Pallisades, New York, April 3-7, 2000.

C58 Carlos O'Ryan, Fred Kuhns, Douglas C. Schmidt, Ossama Othman, and Jeff Parsons, The Design and Performance of a Pluggable Protocols Framework for Real-time Distributed Object Computing Middleware, Proceedings of the IFIP/ACM Middleware 2000 Conference, Pallisades, New York, April 3-7, 2000.

C57 Irfan Pyarali, Carlos O'Ryan, and Douglas C. Schmidt, "A Pattern Language for Efficient, Predictable, Scalable, and Flexible Dispatching Mechanisms for Distributed Object Computing Middleware," Proceedings of the IEEE/IFIP International Symposium on Object-Oriented Real-time Distributed Computing, March 15-17, 2000, Newport Beach, California.

C56 David Levine, Douglas C. Schmidt, and Sergio Flores-Gaitan, "An Empirical Evaluation of OS Support for Real-time CORBA Object Request Brokers," Proceedings of the Multimedia Computing and Networking 2000 (MMCN00) conference, ACM, San Jose, CA, January 25-27 2000.

C55 Douglas C. Schmidt, "Middleware Techniques and Optimizations for Real-time, Embedded Systems," Proceedings of the 12th International Symposium On System Synthesis, IEEE, San Jose, CA, USA November, 11, 1999.

C54 Panrit Tosukhowong, Frederic Andres, Kinji Ono, Nicolas Dessaigne, Josi Martinez, Nouredine Mouaddib, Douglas C. Schmidt, "A Flexible Image Search Engine," Proceedings of International Multimedia Conference Archive Proceedings of the Seventh ACM International Conference on Multimedia, Orlando, Florida, United States, November 1-5, 1999.

C53 Bryan S. Doerr, Thomas Venturella, Rakesh Jha, Christopher D. Gill, and Douglas C. Schmidt, "Adaptive Scheduling for Real-time, Embedded Information Systems," Proceedings of the 18th IEEE/AIAA Digital Avionics Systems Conference (DASC), St. Louis, Missouri, October 24-29, 1999.

C52 Christopher D. Gill, David L. Levine, Carlos O'Ryan, and Douglas C. Schmidt, "Distributed Object Visualization for Sensor-Driven Systems," Proceedings of the 18th IEEE/AIAA Digital Avionics Systems Conference (DASC), St. Louis, Missouri, October 24-29, 1999.

C51 Fred Kuhns, Douglas C. Schmidt, and David L. Levine, "The Performance of a Real-time I/O Subsystem for QoS-enabled ORB Middleware," Proceedings of the International Symposium on Distributed Objects and Applications (DOA '99), Edinburgh, Scotland, September 1999.

C50 David L. Levine, Christopher D. Gill, and Douglas C. Schmidt, "Object Lifecycle Manager – A Complementary Pattern for Controlling Object Creation and Destruction." Proceedings of the 5th Pattern Languages of Programing Conference, Allerton Park, Illinois, USA, 15–18 August 1999.

C49 Fred Kuhns, Douglas C. Schmidt, David Levine, and Rajeev Bector, "The Design and Performance of a Real-time I/O Subsystem," Proceedings of the 5th IEEE Real-Time Technology and Applications Symposium (RTAS99), Vancouver, British Columbia, Canada, June 2-4, 1999.

C48 Irfan Pyarali, Carlos O'Ryan, Douglas C. Schmidt, Nanbor Wang, Vishal Kachroo, and Aniruddha Gokhale, "Applying Optimization Patterns to Design Real-time ORBs," Proceedings of the 5th USENIX Conference on Object-Oriented Technologies and Systems, May 3-7, 1999, San Diego, CA.

C47 Andy Gokhale and Douglas C. Schmidt, "Techniques for Optimizing CORBA Middleware for Distributed Embedded Systems" Proceedings of INFOCOM '99, March 21-25th, New York,

New York.

C46 Sumedh Mungee, Nagarajan Surendran, and Douglas C. Schmidt, "The Design and Performance of a CORBA Audio/Video Streaming Service," Proceedings of the 31st Hawaii International Conference on System Systems (HICSS), Hawaii, January, 1999, minitrack on Multimedia DBMS and the WWW, Hawaii, January 1999.

C45 Chris D. Gill, David L. Levine, and Douglas C. Schmidt, "Dynamic Scheduling for Avionics Applications," Proceedings of the 17th IEEE/AIAA Digital Avionics System Conference, 31 October - 6 November 1998.

C44 James Hu, Irfan Pyarali, and Douglas C. Schmidt, "Applying the Proactor Pattern to High-Performance Web Servers," Proceedings of the 10th International Conference on Parallel and Distributed Computing and Systems, IASTED, Las Vegas, Nevada, October 28-31, 1998.

C43 Douglas C. Schmidt, Sumedh Mungee, and Andy Gokhale, "Alleviating Priority Inversion and Non-determinism in Real-time CORBA ORB Core Architectures," Proceedings of the Fourth IEEE Real-Time Technology and Applications Symposium (RTAS), Denver, Colorado, June 3-5, 1998.

C42 Prashant Jain, Seth Widoff, and Douglas C. Schmidt, "The Design and Performance of Med-Java, A Distributed Electronic Medical Imaging System Developed with Java Applets and Web Tools" Proceedings of the 4th USENIX Conference on Object-Oriented Technologies and Systems, Sante Fe, New Mexico, April 1998. This was selected as the best student paper in the conference.

C41 James Hu, Sumedh Mungee, and Douglas C. Schmidt, "Techniques for Developing and Measuring High-performance Web Servers over ATM Networks," Proceedings of INFOCOM '98, San Francisco, March/April, 1998.

C40 Aniruddha Gokhale and Douglas C. Schmidt, "Optimizing the Performance of the CORBA Internet Inter-ORB Protocol Over ATM," Proceedings of the 31st Hawaii International Conference on System Systems (HICSS), Hawaii, January, 1998. This was selected as the best paper in the Software Technology Track (188 submitted, 77 accepted).

C39 Aniruddha Gokhale and Douglas C. Schmidt, "Evaluating the Performance of Demultiplexing Strategies for Real-time CORBA," Proceedings of GLOBECOM '97 conference, IEEE, Phoenix, AZ, November, 1997.

C38 James Hu, Irfan Pyarali, and Douglas C. Schmidt, "Measuring the Impact of Event Dispatching and Concurrency Models on Web Server Performance Over High-speed Networks," Proceedings of the 2nd Global Internet Conference (held as part of GLOBECOM '97) in Phoenix, AZ, November 4-8, 1997.

C37 Tim Harrison and David Levine and Douglas C. Schmidt, "The Design and Performance of a Real-time CORBA Event Service," Proceedings of OOPSLA '97, ACM, Atlanta, GA, October 1997.

C36 Aniruddha Gokhale and Douglas C. Schmidt and Stan Moyer, "Tools for Automating the Migration from DCE to CORBA,"Proceedings of ISS 97: World Telecommunications Congress, IEEE Toronto, Canada, September, 1997.

C35 Jain and Douglas C. Schmidt, "Service Configurator – A Pattern for Dynamic Configuration of Services," the 4th annual Pattern Languages of Programmingy conference in Allerton Park, Illinois, September 1997.

C34 Chris Cleeland, Douglas C. Schmidt, and Tim H. Harrison, "External Polymorphism – An Object Structural Pattern for Transparently Extending C++ Concrete Data Types," the 4th annual Pattern Languages of Programmingy conference in Allerton Park, Illinois, September 1997.

C33 Douglas C. Schmidt, Tim H. Harrison, and Nat Pryce, "Thread-specific Storage: an Object Behavioral Pattern for Efficiently Accessing per-Thread State," The 4th annual Pattern Languages of Programming conference in Allerton Park, Illinois, September 1997.

C32 Irfan Pyarali, Tim Harrison, Douglas C. Schmidt, and Thomas Jordan, "Proactor: an Object Behavioral Pattern for Demultiplexing and Dispatching Handlers for Asynchronous Events," the 4th annual Pattern Languages of Programming conference in Allerton Park, Illinois, September 1997.

C31 Prashant Jain and Douglas C. Schmidt, "Service Configurator – A Pattern for Dynamic Configuration of Services," Proceedings of the 3rd Conference on Object-Oriented Technologies and Systems, USENIX, Portland, OR, June 16-19, 1997.

C30 Aniruddha Gokhale and Douglas C. Schmidt, "Evaluating Latency and Scalability of CORBA Over High-Speed ATM Networks," Proceedings of the International Conference on Distributed Computing Systems '97, IEEE, Baltimore, Maryland, May 27–30, 1997.

C29 Aniruddha Gokhale and Douglas C. Schmidt, "Performance of the CORBA Dynamic Invocation Interface and Internet Inter-ORB Protocol over High-Speed ATM Networks," Proceedings of GLOBECOM '96, IEEE, London England, November, 1996.

C28 Aniruddha Gokhale and Douglas C. Schmidt, "Measuring the Performance of Communication Middleware on High-Speed Networks," Proceedings of SIGCOMM '96, ACM, San Francisco, August 28-30th, 1996.

C27 Irfan Pyarali, Tim Harrison, and Douglas. C. Schmidt, "Design and Performance of an Object-Oriented Framework for High-Speed Electronic Medical Imaging," Proceedings of the 2nd Conference on Object-Oriented Technologies and Systems (COOTS), USENIX, Toronto, June 18-22, 1996.

C26 Douglas C. Schmidt, "A Family of Design Patterns For Flexibly Configuring Network Services in Distributed Systems," Proceedings of the International Conference on Configurable Distributed Systems, IEEE, Annapolis, Maryland, May 6-8, 1996.

C25 Douglas C. Schmidt "Using Design Patterns to Develop High-Performance Object-Oriented Communication Software Frameworks," Proceedings of the 8th Annual Software Technology Conference, Salt Lake City, Utah, April 21-26, 1996.

C24 Douglas C. Schmidt, Timothy H. Harrison, and Irfan Pyarali, "An Object-Oriented Framework for High-Performance Electronic Medical Imaging," Proceedings of the *Very High Resolution and Quality Imaging* mini-conference at the Symposium on Electronic Imaging in the International Symposia Photonics West 1996, SPIE, San Jose, California USA, January 27 - February 2, 1996.

C23 Douglas C. Schmidt and Charles D. Cranor, "Half-Sync/Half-Async: A Pattern for Efficient and Well-structured Concurrent I/O," *The 2nd Pattern Languages of Programs Conference* Monticello, Illinois, September 6-8, 1995.

C22 R. Greg Lavender and Douglas C. Schmidt, "Active Object: An Object Behavioral Pattern for Concurrent Programming," *The 2nd Pattern Languages of Programs Conference*, Monticello, Illinois, September 6-8, 1995.

C21 Guru Parulkar, Douglas C. Schmidt, and Jonathan S. Turner, "$_aI_tP_m$: a Strategy for Integrating IP with ATM," the Symposium on Communications Architectures and Protocols (SIGCOMM), ACM, Cambridge, MA, August 30 to September 1, 1995.

C20 Douglas C. Schmidt, Tim Harrison, and Ehab Al-Shaer, "Object-Oriented Components for High-speed Network Programming," *Proceedings of the Conference on Object-Oriented Technologies (COOTS)*, USENIX, June 26-29, 1995 Monterey, California, USA, pp. 21-38.

C19 Douglas C. Schmidt and Paul Stephenson, "Experience Using Design Patterns to Evolve Communication Software Across Diverse OS Platforms," *Proceedings of the 9th European Conference on Object-Oriented Programming (ECOOP)*, ACM, Aarhus, Denmark, August, 1995.

C18 Douglas C. Schmidt and Tatsuya Suda, "Measuring the Performance of Parallel Message-based Process Architectures," *Proceedings of the INFOCOM Conference on Computer Communications*, IEEE, Boston, MA, April, 1995, pp. 624-633.

C17 Douglas C. Schmidt and Tatsuya Suda, "Experiences with an Object-Oriented Architecture for Developing Dynamically Extensible Network Management Software," *Proceedings of the Globecom Conference*, IEEE, San Francisco, California, November, 1994, pp. 1-7.

C16 Douglas C. Schmidt and Paul Stephenson, "Achieving Reuse Through Design Patterns," *Proceedings of the 3rd Annual C++ World Conference*, SIGS, Austin, Texas, November 14-18, 1994.

C15 Douglas C. Schmidt, "Developing Object-Oriented Frameworks to Dynamically Configure Concurrent, Multi-service Network Daemons," *Proceedings of the 3rd Annual C++ World Conference*, SIGS, Austin, Texas, November 14-18, 1994.

C14 Douglas C. Schmidt, "Reactor: An Object Behavioral Pattern for Concurrent Event Demultiplexing and Dispatching," *The 1st Annual Conference on the Pattern Languages of Programs*, Monticello, Illinois, August, 1994, pp. 1-10.

C13 Douglas C. Schmidt, "The ADAPTIVE Communication Environment: An Object-Oriented Network Programming Toolkit for Developing Communication Software," *Proceedings of the 12th Annual Sun Users Group Conference*, SUG, San Francisco, June 16-17, 1994. This paper won the "best student paper" award at the conference.

C12 Douglas C. Schmidt, Burkhard Stiller, Tatsuya Suda, and Martina Zitterbart, "Configuring Function-based Communication Protocols for Distributed Applications," *Proceedings of the 8th International Working Conference on Upper Layer Protocols, Architectures, and Applications*, IFIP, Barcelona, Spain, June 1-3, 1994, pp. 361-376.

C11 Douglas C. Schmidt and Tatsuya Suda, "The ADAPTIVE Service Executive: An Object-Oriented Architecture for Configuring Concurrent Distributed Communication Systems," *Proceedings of the 8th International Working Conference on Upper Layer Protocols, Architectures, and Applications*, IFIP, Barcelona, Spain, June 1-3, 1994, pp. 163-178.

C10 Douglas C. Schmidt, "ASX: An Object-Oriented Framework for Developing Distributed Applications," *Proceedings of the 6th C++ Conference*, USENIX, Cambridge, Massachusetts, April, 1994, pp. 200-220.

C9 Douglas C. Schmidt, "The ADAPTIVE Communication Environment: Object-Oriented Network Programming Components for Developing Client/Server Applications," *Proceedings of the 11th Annual Sun Users Group Conference*, SUG, San Jose, December 7-9, 1993, pp. 214-225. This paper won the "best student paper" award at the conference.

C8 Douglas C. Schmidt and Paul Stephenson, "An Object-Oriented Framework for Developing Network Server Daemons," *Proceedings of the 2nd Annual C++ World Conference*, SIGS, Dallas, Texas, October 18-22, 1993, pp. 73-85.

C7 Douglas C. Schmidt, "Object-Oriented Techniques for Developing Extensible Network Servers," *Proceedings of the 2nd Annual C++ World Conference*, SIGS, Dallas, Texas, October 18-22, 1993.

C6 Douglas C. Schmidt, Burkhard Stiller, Tatsuya Suda, Ahmed Tantawy, and Martina Zitterbart, "Configuration Support for Flexible Function-Based Communication Systems," *Proceedings of the 18th Conference on Local Computer Networks*, IEEE, Minneapolis, Minnesota, September 20-22, 1993, pp. 369-378.

C5 Douglas C. Schmidt and Tatsuya Suda, "ADAPTIVE: a Framework for Experimenting with High-Performance Transport System Process Architectures," *Proceedings of the 2nd International Conference on Computer Communications and Networks*, ISCA, San Diego, California, June 28-30, 1993, pp. 1-8.

C4 Donald F. Box, Douglas C. Schmidt, and Tatsuya Suda, "ADAPTIVE: An Object-Oriented Framework for Flexible and Adaptive Communication Protocols," *Proceedings of the 4th Conference on High Performance Networking*, IFIP, Liege, Belgium, December 14-18, 1992, pp. 367-382.

C3 Douglas C. Schmidt, Donald F. Box, and Tatsuya Suda, "ADAPTIVE: A Flexible and Adaptive Transport System Architecture to Support Lightweight Protocols for Multimedia Applications on High-Speed Networks," *Proceedings of the 1st Symposium on High Performance Distributed Computing*, IEEE, Syracuse, New York, September 9-11, 1992, pp. 174-186.

C2 Richard W. Selby, Adam A. Porter, Douglas C. Schmidt, and James Berney, "Metric-Driven Analysis and Feedback Systems for Enabling Empirically Guided Software Development," *Proceedings of the 13th Annual International Conference on Software Engineering*, IEEE, Austin, Texas, May, 1991, pp. 430-443.

C1 Douglas C. Schmidt "GPERF: A Perfect Hash Function Generator," *Proceedings of the 2nd C++ Conference*, USENIX, San Francisco, California, April 9-11, 1990, pp. 87-102.

- **Refereed Workshop Publications**

W74 Nick Guertin, Douglas C. Schmidt, and Harry Levinson, "Business and Organizational Impacts for Modular Flexible Ships," Proceedings of the 2018 Design Sciences Series Workshop on Modular Adaptable Ships, Washington DC, November 14-15, 2018.

W73 Michael Walker, Abhishek Dubey, Aron Laszka, and Douglas C. Schmidt, "PlaTIBART: a Platform for Transactive IoT Blockchain Applications with Repeatable Testing," Proceedings of the ACM/IFIP/USENIX 4th Workshop on Middleware and Applications for the Internet of Things, December 2017, Las Vegas, USA.

W72 Abhishek Dubey, Subhav Pradhan, Douglas C. Schmidt, Sebnem Rusitschka, and Monika Sturm, "The Role of Context and Resilient Middleware in Next Generation Smart Grids," Proceedings of the 3rd Middleware for Context-Aware Applications in the IoT (M4IOT 2016) Workshop at the ACM/IFIP/USENIX Middleware 2016 Conference, Dec 12 - 16, 2016, Trento, Italy.

W71 Violetta Vylegzhanina, Douglas C. Schmidt, and Jules White, "Gaps and Future Directions in Mobile Security Research," Proceedings of the Third International Workshop on Mobile Development Lifecycle, Pittsburgh, PA, October 26th, 2015.

W70 Violetta Vylegzhanina, Douglas C. Schmidt, Pamela Hull, Janice S. Emerson, Meghan E. Quirk, and Shelagh Mulvaney, "Helping Children Eat Well Via Mobile Software Technologies," Proceedings of the Second International Workshop on Mobile Development Lifecycle, October 21st, 2015, Portland, OR.

W69 Jules White and Douglas C. Schmidt, "R&D Challenges and Emering Softwares for Multicore Deployment/Configuration Optimization," proceedings of the ACM Workshop on Future of Software Engineering Research (FoSER 2010), Santa Fe, NM, November 7-11, 2010.

W68 Will Otte, Douglas C. Schmidt, and Aniruddha Gokhale, "Towards an Adaptive Deployment and Configuration Framework for Component-based Distributed Systems," Proceedings of the 9th Workshop on Adaptive and Reflective Middleware (ARM 2010) November 27, 2010, Bangalore India, collocated with Middleware 2010.

W67 Jaiganesh Balasubramanian, Alexander Mintz, Andrew Kaplan, Grigory Vilkov, Artem Gleyzer, Antony Kaplan, Ron Guida, Pooja Varshneya and Douglas Schmidt, "Adaptive Parallel Computing for Large-scale Distributed and Parallel Applications," Proceedings of the Workshop on Data Dissemination for Large-scale Complex Critical Infrastructures (DD4LCCI), 27 April 2010, in conjunction with EDCC 2010, Valencia - Spain, April 28-30, 2010.

W66 Joe Hoffert, Douglas Schmidt, and Aniruddha Gokhale, "Adapting and Evaluating Distributed Real-time and Embedded Systems in Dynamic Environments," Proceedings of the Workshop on Data Dissemination for Large-scale Complex Critical Infrastructures (DD4LCCI), 27 April 2010, in conjunction with EDCC 2010, Valencia - Spain, April 28-30, 2010.

W65 Joe Hoffert, Dan Mack, and Douglas C. Schmidt, "Using Machine Learning to Maintain Pub/Sub System QoS in Dynamic Environments, Proceedings of the 8th Workshop on Adaptive and Reflective Middleware (ARM'09) December 1st 2009, Urbana Champaign, Illinois, USA collocated with Middleware 2009.

W64 Chris Thompson, Jules White, Brian Dougherty, and Douglas C. Schmidt, "Optimizing Mobile Application Performance with Model-Driven Engineering," Proceedings of the 7th IFIP Workshop on Software Technologies for Future Embedded and Ubiquitous Systems (SEUS 2009), November 16-18, 2009, Newport Beach, California.

W63 Jules White and Douglas C. Schmidt, "Filtered Cartesian Flattening: An Approximation Technique for Optimally Selecting Features while Adhering to Resource Constraints," proceedings of the Workshop on Analyses of Software Product Lines (ASPL 2008) at the Software Product Lines Conference (SPLC), September 8-12, 2008, Limerick, Ireland.

W62 Joe Hoffert, Douglas C. Schmidt, Mahesh Balakrishnan, and Ken Birman, Supporting Large-scale Continuous Stream Datacenters via Pub/Sub Middleware and Adaptive Transport Protocols, Proceedings of the 2nd workshop on Large-Scale Distributed Systems and Middleware (LADIS 2008), IBM TJ Watson Research Center, Yorktown, New York, September 2008.

W61 Nishanth Shankaran, John S. Kinnebrew, Xenofon D. Koutsoukos, Chenyang Lu, Douglas C. Schmidt, and Gautam Biswas, Towards an Integrated Planning and Adaptive Resource Management Architecture for Distributed Real-time Embedded Systems," Proceedings of the Workshop on Adaptive and Reconfigurable Embedded Systems (APRES) at the 14th IEEE Real-Time and Embedded Technology and Applications Symposium, St. Louis, MO, United States, April 22 - April 24, 2008.

W60 Serena Fritsch, Aline Senart, Douglas C. Schmidt, and Siobhan Clarke, "Scheduling Time-bounded Dynamic Software Adaptation," Proceedings of the workshop on Software Engineer-

ing for Adaptive and Self-Managing Systems at the 30th IEEE/ACM International Conference on Software Engineering May 12-13, 2008, Leipzig, Germany.

W59 James Hill, Jules White, Sean Eade, and Douglas C. Schmidt, "Towards a Solution for Synchronizing Disparate Models of Ultra-Large-Scale Systems," Proceedings of the Second International Workshop on Ultra-Large-Scale Software- Intensive Systems at the 30th IEEE/ACM International Conference on Software Engineering May 10-11, 2008, Leipzig, Germany.

W58 Douglas C. Schmidt and Hans van't Hag, "Addressing the Challenges of Tactical Information Management in Net-Centric Systems with OpenSplice DDS," Proceedings of the 16th International ACM Workshop on Parallel and Distributed Real-Time Systems (WPDRTS '08), Miami, Florida, April 2008.

W57 Shanshan Jiang, Yuan Xue, and Douglas C. Schmidt, "Disruption-Aware Service Composition and Recovery in Dynamic Networking Environments," WoRkshop on Automating Service Quality (WRAQS) 2007, Co-Located with ASE 2007 November 6, 2007, Atlanta, Georgia.

W56 Jules White, Douglas C. Schmidt, Sean Mulligan, "The Generic Eclipse Modeling System," Model-Driven Development Tool Implementer's Forum, TOOLS '07, June, 2007, Zurich, Switzerland.

W55 John S. Kinnebrew, Nishanth Shankaran, Gautam Biswas, and Douglas C. Schmidt, A Decision-Theoretic Planner with Dynamic Component Reconfiguration for Distributed Real-time and Embedded Systems, Proceedings of the Workshop on Artificial Intelligence for Space Applications at IJCAI 2007, January 6-12, 2007, Hyderabad, India.

W54 Andrey Nechypurenko, Jules White, Egon Wuchner, and Douglas C. Schmidt, "Applying Model Intelligence Frameworks for Deployment Problem in Real-time and Embedded Systems," Proceedings of MARTES: Modeling and Analysis of Real-Time and Embedded Systems to be held on October 2, 2006 in Genova, Italy in conjunction with the 9th International Conference on Model Driven Engineering Languages and Systems, MoDELS/UML 2006.

W53 Jules White, Andrey Nechypurenko, Egon Wuchner, and Douglas C. Schmidt, "Intelligence Frameworks for Assisting Modelers in Combinatorically Challenging Domains," Proceedings of the Workshop on Generative Programming and Component Engineering for QoS Provisioning in Distributed Systems, October 23, 2006, Portland, Oregon.

W52 Nishanth Shankaran, Xenofon Koutsoukos, Douglas C. Schmidt, and Aniruddha Gokhale, "Evaluating Adaptive Resource Management for Distributed Real-Time Embedded Systems," Proceedings of the 4th Workshop on Adaptive and Reflective Middleware, November 28, 2005 Grenoble, France.

W51 Jules White and Douglas Schmidt, "Simplifying the Development of Product-line Customization Tools via Model Driven Development," MODELS 2005 workshop on MDD for Software Product-lines: Fact or Fiction?, October 2, 2005, Jamaica.

W50 Arvind S. Krishna, Aniruddha Gokhale, Douglas C. Schmidt, Venkatesh Prasad Ranganath, and John Hatcliff, "Model-driven Middleware Specialization Techniques for Software Product-line Architectures in Distributed Real-time and Embedded Systems," MODELS 2005 workshop on MDD for Software Product-lines: Fact or Fiction?, October 2, 2005, Jamaica.

W49 Gen Deng, Gunther Lenz, and Douglas C. Schmidt, "Addressing Domain Evolution Challenges in Model-Driven Software Product-line Architectures," MODELS 2005 workshop on MDD for Software Product-lines: Fact or Fiction?, October 2, 2005, Jamaica.

W48 Andrey Nechypurenko and Douglas C. Schmidt, "Supporting Model Reusability with Pattern-based Composition Units," Proceedings of the IST 2nd European Workshop on Model Driven Architecture (MDA), with an emphasis on Methodologies and Transformations September 7th-8th 2004, Canterbury, England.

W47 Cemal Yilmaz, Arvind S. Krishna, Atif Memon, Adam Porter, Douglas C. Schmidt, Aniruddha Gokhale, and Balachandran Natarajan, "A Model-based Distributed Continuous Quality Assurance Process to Enhance the Quality of Service of Evolving Performance-intensive Software Systems," Proceedings of the 2nd ICSE Workshop on Remote Analysis and Measurement of Software Systems (RAMSS), Edinburgh, Scotland, UK, May 24, 2004.

W46 Andrey Nechypurenko, Douglas C. Schmidt, Tao Lu, Gan Deng, Aniruddha Gokhale, "Applying MDA and Component Middleware to Large-scale Distributed Systems: a Case Study, Proceedings of the OMG 1st European Workshop on Model Driven Architecture with Emphasis on Industrial Application, Enschede, the Netherlands, March 2004.

W45 Gan Deng, Tao Lu, Emre Turkay, Aniruddha Gokhale, Douglas C. Schmidt, and Andrey Nechypurenko, "Model Driven Development of Inventory Tracking System," Proceedings of the OOPSLA 2003 Workshop on Domain-Specific Modeling Languages, Anaheim, CA, October 2003.

W44 Tao Lu, Emre Turkay, Aniruddha Gokhale, and Douglas C. Schmidt, "CoSMIC: An MDA Tool suite for Application Deployment and Configuration," Proceedings of the OOPSLA 2003 Workshop on Generative Techniques in the Context of Model Driven Architecture, Anaheim, CA, October 2003.

W43 Arvind S. Krishna, Jai Balasubramanian, Aniruddha Gokhale, Douglas C. Schmidt, Diego Sevilla, and Gautham Thaker, "Empirically Evaluating CORBA Component Model Implementations," Proceedings of the ACM OOPSLA 2003 Workshop on Middleware Benchmarking, Anaheim, CA, October 2003.

W42 Aniruddha Gokhale, Douglas C. Schmidt, Tao Lu, Balachandran Natarjan, and Nanbor Wang, CoSMIC: An MDA Generative Tool for Distributed Real-time and Embedded Applications, Workshop on Model-driven Approaches to Middleware Applications Development at 4th IFIP/ACM/USENIX International Conference on Middleware for Distributed Systems Platforms, June 16, 2003, Rio de Janeiro, Brazil.

W41 Ossama Othman, Jaigaesh Balasubramanian, and Douglas C. Schmidt, "The Design and Performance of an Adaptive Middleware Load Balancing and Monitoring Service," Third International Workshop on Self-Adaptive Software, Arlington, VA, USA, June 9-11, 2003.

W40 Radu Cornea, Shivajit Mohapatra, Nikil Dutt, Rajesh Gupta, Ingolf Krueger, Alex Nicolau, Doug Schmidt, Sandeep Shukla, and Nalini Venkatasubramanian, "A Model-Based Approach to System Specification for Distributed Real-time and Embedded Systems," IEEE RTAS Workshop on Model-Driven Embedded Systems, Washington DC, May 27-30, 2003.

W39 Adam Porter, Cemal Yilmaz, and Douglas C. Schmidt "Distributed Continuous Quality Assurance: The Skoll Project," Proceedings of the Workshop on Remote Analysis and Measurement of Software Systems (RAMSS), Portland, Oregon, May 9, 2003.

W38 Krishnakumar Balasubramanian, Douglas C. Schmidt, Nanbor Wang, Christopher D. Gill, "Towards Composable Distributed Real-time and Embedded Software," Proceedings of the 8th IEEE Workshop on Object-oriented Real-time Dependable Systems, Guadalajara, Mexico, January 2003.

W37 Aniruddha Gokhale, Balachandran Natarjan, Douglas C. Schmidt, Andrey Nechypurenko, Nanbor Wang, Jeff Gray, Sandeep Neema, Ted Bapty, and Jeff Parsons, "CoSMIC: An MDA Generative Tool for Distributed Real-time and Embedded Component Middleware and Applications," Proceedings of the OOPSLA 2002 Workshop on Generative Techniques in the Context of Model Driven Architecture, Seattle, WA, November 2002.

W36 M. Mousavi, G. Russello, M. Chaudron, M. Reniers, T. Basten, A. Corsaro, S. Shukla, R. Gupta, and D.C. Schmidt, "Using Aspect-GAMMA in Design and Verification of Embedded Systems," Proceedings of the Seventh Annual IEEE International Workshop on High Level Design Validation and Test Workshop, Cannes, France, October 27-29, 2002.

W35 Douglas C. Schmidt, Andy Gokhale, and Chris Gill, "Applying Model-Integrated Computing and DRE Middleware to High Performance Embedded Computing Applications," Proceedings of the 6th Annual Workshop on High-Performance Embedded Computing (HPEC), September 24-26, Boston, MA.

W34 Douglas C. Schmidt, "Adaptive and Reflective Middleware for Distributed Real-time and Embedded Systems," EMSOFT 2002: Second Workshop on Embedded Software, Grenoble, France, October, 7-9th, 2002.

W33 Aniruddha S. Gokhale and Douglas C. Schmidt and Joseph K. Cross and Christopher Andrews and Sylvester J. Fernandez and Bala Natarajan and Nanbor Wang and Chris D. Gill, "Towards Real-time Support in Fault-tolerant CORBA," IEEE Workshop on Dependable Middleware-Based Systems, Washington, D.C., June 23-26, 2002.

W32 Chris Gill, Joe Loyall, Rick Schantz, and Douglas C. Schmidt, "Lessons Learned From Using Adaptive DOC Middleware in Real Application Contexts," IEEE Workshop on Dependable Middleware-Based Systems, Washington, D.C., June 23-26, 2002.

W31 M. Mousavi, G. Russello, M. Chaudron, M. Reniers, T. Basten, A. Corsaro, S. Shukla, R. Gupta, and D.C. Schmidt, "Aspects + GAMMA = AspectGAMMA A Formal Framework for

Aspect-Oriented Specification," Proceedings of Early Aspects: Aspect-Oriented Requirements Engineering and Architecture Design Workshop, Enschede, The Netherlands, April 2002.

W30 Joseph K. Cross and Douglas C. Schmidt, "Meta-Programming Techniques for Distributed Real-time and Embedded Systems," Proceedings of the 7th IEEE Workshop on Object-oriented Real-time Dependable Systems, San Diego, CA, January, 2002.

W29 Douglas C. Schmidt and Mayur Deshpande and Carlos O'Ryan, "Operating System Performance in Support of Real-time Middleware," Proceedings of the 7th IEEE Workshop on Object-oriented Real-time Dependable Systems, San Diego, CA, January, 2002.

W28 Christopher D. Gill, Ron Cytron, and Douglas C. Schmidt, "Middleware Scheduling Optimization Techniques for Distributed Real-Time and Embedded Systems," Proceedings of the 7th IEEE Workshop on Object-oriented Real-time Dependable Systems, San Diego, CA, January, 2002.

W27 Douglas C. Schmidt, "Adaptive and Reflective Middleware for Distributed Real-time and Embedded Systems," EMSOFT 2001: First Workshop on Embedded Software, Lake Tahoe, California, October, 8th-10th, 2001.

W26 Darrell Brunsch, Carlos O'Ryan, and Douglas C. Schmidt, "Designing an Efficient and Scalable Server-side Asynchrony Model for CORBA," Proceedings of the ACM SIGPLAN Workshop on Optimization of Middleware and Distributed Systems (OM 2001), Snowbird, Utah, June 18, 2001.

W25 Irfan Pyarali, Marina Spivak, Douglas C. Schmidt, and Ron Cytron, "Optimizing Thread-Pool Strategies for Real-Time CORBA," Proceedings of the ACM SIGPLAN Workshop on Optimization of Middleware and Distributed Systems (OM 2001), Snowbird, Utah, June 18, 2001.

W24 Yamuna Krishnamurthy, Vishal Kachroo, David A. Karr, Craig Rodrigues, Joseph P. Loyall, Richard Schantz, and Douglas C. Schmidt, "Integration of QoS-enabled Distributed Object Computing Middleware for Developing Next-generation Distributed Applications," Proceedings of the ACM SIGPLAN Workshop on Optimization of Middleware and Distributed Systems (OM 2001), Snowbird, Utah, June 18, 2001.

W23 Ossama Othman and Douglas C. Schmidt, Optimizing Distributed system Performance via Adaptive Middleware Load Balancing, Proceedings of the ACM SIGPLAN Workshop on Optimization of Middleware and Distributed Systems (OM 2001), Snowbird, Utah, June 18, 2001.

W22 Pradeep Gore, Douglas C. Schmidt, Carlos O'Ryan, and Ron Cytron, "Designing and Optimizing a Scalable CORBA Notification Service," Proceedings of the ACM SIGPLAN Workshop on Optimization of Middleware and Distributed Systems (OM 2001), Snowbird, Utah, June 18, 2001.

W21 Douglas C. Schmidt and Adam Porter, "Leveraging Open-Source Processes to Improve the Quality and Performance of Open-Source Software," Proceedings of the 1st Workshop on Open Source Software Engineering, ICSE 23, Toronto, Canada, May 15, 2001.

W20 Christopher D. Gill, David Levine, Douglas C. Schmidt, "Towards Real-Time Adaptive QoS Management in Middleware for Embedded Computing Systems," Fourth Annual Workshop on High Performance Embedded Computing, MIT Lincoln Laboratory, September 20-22, 2000.

W19 Christopher D. Gill, Fred Kuhns, David Levine, Douglas C. Schmidt, Bryan S. Doerr, and Richard E. Schantz, "Applying Adaptive Real-time Middleware to Address Grand Challenges of COTS-based Mission-Critical Real-Time Systems," Proceedings of the 1st International Workshop on Real-Time Mission-Critical Systems: Grand Challenge Problems, IEEE, Phoenix, Arizona, November 30, 1999.

W18 Carlos O'Ryan, Douglas C. Schmidt, David Levine, and Russell Noseworthy, "Applying a Real-time CORBA Event Service to Large-scale Distributed Interactive Simulation," 5th International Workshop on Object-oriented Real-Time Dependable Systems, IEEE, Monterey, CA, November 15-18, 1999.

W17 Fred Kuhns, Carlos O'Ryan, Douglas C. Schmidt, and Jeff Parsons, "The Design and Performance of a Pluggable Protocols Framework for Object Request Broker Middleware," Proceedings of the IFIP Sixth International Workshop on Protocols For High-Speed Networks (PfHSN '99), Salem, MA, August 25-27, 1999.

W16 David Levine, Sergio Flores-Gaitan, and Douglas C. Schmidt, "Measuring OS Support for Real-time CORBA ORBs," Proceedings of the Fourth International IEEE Workshop on Object-oriented Real-time Dependable Systems (WORDS'99), Santa Barbara, California, January 27-29, 1999.

W15 Douglas C. Schmidt, Rajeev Bector, David Levine Sumedh Mungee, and Guru Parulkar, "TAO: a Middleware Framework for Real-time ORB Endsystems," Proceedings of the Workshop on Middleware for Real-Time Systems and Services, held in conjunction with IEEE Real-time Systems Symposium, San Francisco, CA, December 2nd, 1997.

W14 Aniruddha Gokhale, Tim Harrison, Douglas C. Schmidt, and Guru Parulkar, "Operating System Support for Real-time CORBA," *Proceedings of the 5th International Workshop on Object-Orientation in Operating Systems*: IWOOOS 1996 workshop, October 27-28, 1996, Seattle, Washington.

W13 Douglas C. Schmidt, Guru Parulkar, and Chuck Cranor, "Gigabit CORBA - High-Performance Distributed Object Computing," Gigabit Networking Workshop (GBN'96), 24 March 1996, San Francisco, in conjunction with INFOCOM '96.

W12 Douglas C. Schmidt, "Acceptor and Connector: Design Patterns for Actively and Passively Initializing Network Services." Workshop on Pattern Languages of Object-Oriented Programs at ECOOP '95, August 7–1, 1995, Aarhus, Denmark.

W11 Douglas C. Schmidt, "High-Performance Event Filtering for Dynamic Multi-point Applications," Proceedings of the 1st Workshop on High Performance Protocol Architectures (HIPPARCH), INRIA, Sophia Antipolis, France, December, 1994, p 1-8.

W10 Douglas C. Schmidt, "Flexible Configuration of High-Performance Object-Oriented Distributed Communication Systems," 9th OOPSLA Conference, invited paper to the Workshop on Flexibility in Systems Software, ACM, Portland, Oregon, October, 1994, pp. 1-4.

W9 Douglas C. Schmidt and Tatsuya Suda, "Measuring the Impact of Alternative Parallel Process Architectures on Communication Subsystem Performance," *Proceedings of the Proceedings of the 4th International Workshop on Protocols for High-Speed Networks*, IFIP, Vancouver, British Columbia, August, 1994, pp. 103-118.

W8 Douglas C. Schmidt and Tatsuya Suda, "The Service Configurator Framework: An Extensible Architecture for Dynamically Configuring Concurrent, Multi-service Network Daemons," *Proceedings of the 2nd International Workshop on Configurable Distributed Systems*, IEEE, Pittsburgh, PA, March 21-23, 1994, pp. 190-201.

W7 Douglas C. Schmidt, Burkhard Stiller, Tatsuya Suda, and Martina Zitterbart, "Tools for Generating Application-Tailored Multimedia Protocols on Heterogeneous Multi-Processor Platforms," *Proceedings of the 2nd Workshop on High-Performance Communications Subsystems*, IEEE, Williamsburg, Virginia, September 1-3, 1993, pp. 1-7.

W6 Douglas C. Schmidt and Tatsuya Suda, "A Framework for Developing and Experimenting with Parallel Process Architectures to Support High-Performance Transport Systems," *Proceedings of the 2nd Workshop on High-Performance Communications Subsystems*, IEEE, Williamsburg, Virginia, September 1-3, 1993, pp. 1-8.

W5 Tatsuya Suda, Douglas C. Schmidt, Donald F. Box, Duke Hong and Hung Huang, "High Speed Networks," *Proceedings of the International Computer World Symposium '92*, Kobe, Japan, November, 1992.

W4 Hung K. Huang, Douglas C. Schmidt, Donald F. Box, Kazu Shimono, Girish Kotmire, Unmesh Rathi, and Tatsuya Suda, "ADAPTIVE: A Prototyping Environment for Transport Systems." *Proceedings of the 4th International Workshop on Computer Aided Modeling, Analysis, and Design of Communication Links and Networks (CAMAD)*, IEEE, Montreal, Canada, September, 1992.

W3 Donald F. Box, Douglas C. Schmidt, and Tatsuya Suda, "Alternative Approaches to ATM/-Internet Interoperation," *Proceedings of the 1st Workshop on the Architecture and Implementation of High-Performance Communication Subsystems*, IEEE, Tucson, Arizona, February 17-19, 1992, pp. 1-5.

W2 Douglas C. Schmidt and Richard Selby "Modeling Software Interconnectivity," *Proceedings of the 22nd Symposium on the Interface: Computer Science and Statistics*, East Lansing, MI, May, 1990.

W1 Richard W. Selby, Greg James, Kent Madsen, Joan Mahoney, Adam A. Porter, and Douglas C. Schmidt "Classification Tree Analysis Using the Amadeus Measurement and Empirical Analysis System," *Proceedings of the 14th Annual Software Engineering Workshop at NASA Software Engineering Laboratory*, College Park, Maryland, November, 1989, pp. 239-250.

- **Trade Magazine and Newsletter Publications**

M74 Douglas C. Schmidt and Jules White, "Why Don't Big Companies Keep Their Computer Systems Up-to-date?," *The Conversation*, September 26, 2017.

M73 Douglas C. Schmidt, Accelerating the Industrial Internet with the OMG Data Distribution Service, Real-time Innovations, January 2014.

M72 Douglas C. Schmidt and Ron Guida, "Elastic Application Platforms for Cloud Computing," HPC In the Cloud, September 2010.

M71 Douglas C. Schmidt and Ron Guida, "Achieving Ultra High Performance in the Cloud," HPC In the Cloud, August 2010.

M70 Douglas C. Schmidt, "Building Ultra High Performance Computing Applications with Zircon Software," Programmer's Paradise, May 31st, 2010.

M69 Egon Wuchner, Andrey Nechypurenko, Jules White, and Douglas C. Schmidt, "Das Generic Eclipse Modeling System (GEMS): Skalierbare Domanenmodellierung Leicht(er) Gemacht," SIGS ObjectSpektrum, June, 2007.

M68 Jules White, Douglas C. Schmidt, Andrey Nechypurenko, and Egon Wuchner, Introduction to the Generic Eclipse Modeling System, Eclipse Magazine, Volume 06, January, 2007.

M67 Bala Natarajan, Douglas C. Schmidt, and Steve Vinoski, "Object Interconnections: The CORBA Component Model Part 4: Implementing Components with CCM, C/C++ Users Journal, October, 2004.

M66 Bala Natarajan, Douglas C. Schmidt, and Steve Vinoski, "The CORBA Component Model Part 3: The CCM Container Architecture and Component Implementation Framework," C/C++ Users Journal, September, 2004.

M65 Douglas C. Schmidt, Richard Schantz, Aniruddha Gokhale, and Joe Loyall, "Middleware R&D Challenges for Distributed Real-time and Embedded Systems," SIGBED Review, Volume 1, No. 1, April 2004.

M64 Douglas C. Schmidt and Steve Vinoski, "Object Interconnections: The CORBA Component Model: Part 2: Defining Components with the IDL 3.x Types," C/C++ Users Journal, May, 2004.

M63 Douglas C. Schmidt and Steve Vinoski, "Object Interconnections: The CORBA Component Model: Part 1: Evolving Towards Components," C/C++ Users Journal, February, 2004.

M62 Douglas C. Schmidt and Steve Vinoski, "Object Interconnections: XML Reflection for CORBA," C/C++ Users Journal, December, 2003.

M61 Douglas C. Schmidt and Steve Vinoski, "Object Interconnections: CORBA Metaprogramming Mechanisms, Part 1: Portable Interceptors Concepts and Components," C/C++ Users Journal, March, 2003.

M60 Douglas C. Schmidt and Steve Vinoski, Object Interconnections: "Dynamic CORBA, Part 4: The Interface Repository," C/C++ Users Journal, January, 2003.

M59 Douglas C. Schmidt, "Voice of the Customer: An Interview," Raytheon Technology Today, spring 2003, Volume 2, Issue 1.

M58 Douglas C. Schmidt and Steve Vinoski, "Object Interconnections: Dynamic CORBA, Part 3: The Dynamic Skeleton Interface," C/C++ Users Journal, November, 2002.

M57 Douglas C. Schmidt and Steve Vinoski, "Object Interconnections: Dynamic CORBA, Part 2: Dynamic Any," C/C++ Users Journal, September, 2002.

M56 Douglas C. Schmidt and Steve Vinoski, "Object Interconnections: Dynamic CORBA, Part 1: The Dynamic Invocation Interface," C/C++ Users Journal, July, 2002.

M55 Douglas C. Schmidt and Steve Vinoski, "Object Interconnections: Real-time CORBA, Part 4: Protocol Selection and Explicit Binding," C/C++ Users Journal, May, 2002.

M54 Douglas C. Schmidt and Steve Huston, "Why Standards Alone Won't Get You Portable Software And How to Make Open Source Development Work for You," InformIT: Focus on C++, Addison-Wesley.

M53 Douglas C. Schmidt and Steve Vinoski, "Real-time CORBA Part 3: Thread Pools and Synchronizers," C/C++ Users Journal, March, 2002.

M52 Douglas C. Schmidt and Steve Vinoski, "Real-time CORBA, Part 2: Applications and Priorities," C/C++ Users Journal, January, 2002.

M51 Douglas C. Schmidt and Steve Vinoski, "Real-time CORBA, Part 1: Motivation and Overview," *C/C++ Users Journal*, October, 2001.

M50 Douglas C. Schmidt and Steve Vinoski, "CORBA and XML, Part 3: SOAP and Web Services," *C/C++ Users Journal*, September, 2001.

M48 Douglas C. Schmidt and Steve Vinoski, "Object Interconnections: CORBA and XML, Part 2: XML as CORBA Data," *C/C++ Users Journal*, July, 2001.

M47 Douglas C. Schmidt and Steve Vinoski, "Object Interconnections: CORBA and XML, Part 1: Versioning," *C/C++ Users Journal*, May, 2001.

M46 Douglas C. Schmidt and Steve Vinoski, "Standard C++ and the OMG C++ Mapping: Server-side Mappings and Pseudo-Objects," *C/C++ Users Journal*, April, 2001.

M45 Douglas C. Schmidt and Steve Vinoski, "Standard C++ and the OMG C++ Mapping," *C/C++ Users Journal*, January, 2001.

M44 Douglas C. Schmidt and Steve Vinoski, "The History of the OMG C++ Mapping", *C/C++ Users Journal*, November, 2000.

M43 Douglas C. Schmidt and Steve Vinoski, "An Overview of the OMG CORBA Messaging Quality of Service (QoS) Framework," *C++ Report*, SIGS, Vol. 12, No 3, March, 2000.

M42 Douglas C. Schmidt, "Monitor Object – an Object Behavior Pattern for Concurrent Programming," *C++ Report*, SIGS, Vol. 12., No. 4. May 2000.

M41 Alexander B. Arulanthu, Carlos O'Ryan, Douglas C. Schmidt, and Michael Kircher, "Applying Patterns and Components to Develop an IDL Compiler for CORBA AMI Callbacks," *C++ Report*, SIGS, Vol. 12, No. 3, March, 2000.

M40 David Levine, Chris Gill, and Douglas C. Schmidt, "Object Lifetime Manager – A Complementary Pattern for Controlling Object Creation and Destruction," *C++ Report*, SIGS, Vol. 11, No. 11, November/December, 1999.

M39 Douglas C. Schmidt, Steve Vinoski, and Nanbor Wang, "Collocation Optimizations for CORBA," *C++ Report*, SIGS, Vol. 11, No. 10, October, 1999.

M38 Douglas C. Schmidt, "Strategized Locking, Thread-safe Decorator, and Scoped Locking: Patterns and Idioms for Simplifying Multi-threaded C++ Components," *C++ Report*, SIGS, Vol. 11, No. 9, September, 1999.

M37 Douglas C. Schmidt and Steve Vinoski, "Time-Independent Invocation and Interoperable Routing," *C++ Report*, SIGS, Vol. 11, No 5, May, 1999.

M36 Michael Kircher and Douglas C. Schmidt, "Dove: A Distributed Object Visualization Environment," *C++ Report*, SIGS, Vol. 11, No 3, March, 1999.

M35 Douglas C. Schmidt, "Wrapper Facade: A Structural Pattern for Encapsulating Functions within Classes," *C++ Report*, SIGS, Vol. 11, No 2, February, 1999.

M34 Douglas C. Schmidt and Steve Vinoski, "Programming Asynchronous Method Invocation with CORBA Messaging," *C++ Report*, SIGS, Vol. 11, No 2, February, 1999.

M33 Douglas C. Schmidt "Why Software Reuse has Failed and How to Make It Work for You," C++ Report, SIGS, Vol. 11, No. 1, January, 1999.

M32 Douglas C. Schmidt, "An Architectural Overview of the ACE Framework: A Case-study of Successful Cross-platform Systems Software Reuse," USENIX login magazine, Tools special issue, November, 1998.

M31 Douglas C. Schmidt, "GPERF: A Perfect Hash Function Generator," C++ Report, SIGS, Vol. 10, No. 10, November/December, 1998.

M30 Douglas C. Schmidt and Steve Vinoski, "Introduction to CORBA Messaging," SIGS, Vol. 10, No 10, November/December, 1998.

M29 Douglas C. Schmidt and Steve Vinoski, "C++ Servant Managers for the Portable Object Adapter," SIGS, Vol. 10, No 8, September, 1998.

M28 Chris Cleeland and Douglas C. Schmidt, "External Polymorphism, An Object Structural Pattern for Transparently Extending C++ Concrete Data Types," C++ Report, SIGS, Vol. 10, No. 6, July/August, 1998.

M27 Douglas C. Schmidt and Irfan Pyarali, "Strategies for Implementing POSIX Condition Variables on Win32," C++ Report, SIGS, Vol. 10, No. 5, June, 1998.

M26 Douglas C. Schmidt and Steve Vinoski, "Using the Portable Object Adapter for Transient and Persistent CORBA Objects," C++ Report, SIGS, Vol. 10, No 4. May, 1998.

M25 Douglas C. Schmidt, "Applying Design Patterns to Simplify Signal Handling," C++ Report, SIGS, Vol. 10, No. 4, May, 1998.

M24 Douglas C. Schmidt, Tim H. Harrison, and Nat Pryce, "Thread-specific Storage: an Object Behavioral Pattern for Efficiently Accessing per-Thread State," C++ Report, SIGS, Vol. 9, No. 10, November/December, 1997

M23 Douglas C. Schmidt and Steve Vinoski, "Object Adapters: Concepts and Terminology," C++ Report, SIGS, Vol. 9, No 11. November/December, 1997.

M22 Prashant Jain and Douglas C. Schmidt, "Dynamically Configuring Communication Services with the Service Configurator Pattern," *C++ Report*, SIGS, Vol. 9, No. 6, June, 1997.

M21 Douglas C. Schmidt and Steve Vinoski, "Overcoming Drawbacks in the OMG Events Service," *C++ Report*, SIGS, Vol. 9, No 6. June, 1997.

M20 Douglas C. Schmidt and Steve Vinoski, "OMG Event Object Service," *C++ Report*, SIGS, Vol. 9, No 2. February, 1997.

M19 Prashant Jain and Douglas C. Schmidt, "Experiences Converting a C++ Communication Framework to Java," *C++ Report*, SIGS, Vol. 9, No. 1, January, 1997.

M18 Douglas C. Schmidt, "Lessons Learned Building Reusable OO Telecommunication Software," Multiuse Express, Lucent Technologies, Vol. 4, No. 6, December, 1996.

M17 Douglas C. Schmidt and Steve Vinoski, "Distributed Callbacks and Decoupled Communication in CORBA," *C++ Report*, SIGS, Vol. 8, No 9. October, 1996.

M16 Timothy H. Harrison and Douglas C. Schmidt, "Evaluating the Performance of OO Network Programming Toolkits," *C++ Report*, SIGS, Vol. 8, No 7. July/August 1996.

M15 Douglas C. Schmidt and Steve Vinoski, "Comparing Alternative Programming Techniques for Multi-threaded Servers – the Thread-per-Session Concurrency Model," *C++ Report*, SIGS, Vol. 8, No 7. July/August 1996.

M14 Douglas C. Schmidt and Steve Vinoski, "Comparing Alternative Programming Techniques for Multi-threaded Servers – the Thread-Pool Concurrency Model," *C++ Report*, SIGS, Vol. 8, No 4. April 1996.

M13 Douglas C. Schmidt and Steve Vinoski, "Comparing Alternative Programming Techniques for Multi-threaded Servers – the Thread-per-Request Concurrency Model," *C++ Report*, SIGS, Vol. 8, No 2. February 1996.

M12 Douglas C. Schmidt, "A Design Pattern for Actively Initializing Network Services," *C++ Report*, SIGS, Vol. 8, No. 1, January 1996.

M11 Douglas C. Schmidt, "Design Patterns for Initializing Network Services: Introducing the Acceptor and Connector Patterns," *C++ Report*, SIGS, Vol. 7, No. 9, November/December 1995.

M10 Douglas C. Schmidt and Steve Vinoski, "Comparing Alternative Server-side Distributed Programming Techniques," Object Interconnections Column, *C++ Report*, SIGS, Vol. 7, No. 8, October 1995.

M9 Douglas C. Schmidt and Steve Vinoski, "Comparing Alternative Client-side Distributed Programming Techniques," Object Interconnections Column, *C++ Report*, SIGS, Vol. 7, No. 4, May 1995.

M8 Douglas C. Schmidt and Paul Stephenson, "Using Design Patterns to Evolve System Software from UNIX to Windows NT," *C++ Report*, SIGS, Vol. 7, No. 3, March/April 1995, pp. 27-39.

M8 Douglas C. Schmidt and Steve Vinoski, "Distributed Object Computing by Example," Object Interconnections Column, *C++ Report*, SIGS, Vol. 7, No. 2, February 1995.

M7 Douglas C. Schmidt and Steve Vinoski, "Distributed Object Computing with C++," Object Interconnections Column, *C++ Report*, SIGS, Vol. 7, No. 1, January 1995.

M6 Douglas C. Schmidt, "Transparently Parameterizing Synchronization Mechanisms into a Concurrent Distributed Application," *C++ Report*, SIGS, Vol. 6, No. 5, July/August 1994, pp. 1-10.

M5 Douglas C. Schmidt, "A Domain Analysis of Network Daemon Design Dimensions," *C++ Report*, SIGS, Vol. 6, No. 3, March/April, 1994, pp. 1-12.

M4 Douglas C. Schmidt, "The Object-Oriented Design and Implementation of the Reactor: A C++ Wrapper for UNIX I/O Multiplexing," *C++ Report*, SIGS, Vol. 5, No. 7, September, 1993, pp. 1-14.

M3 Douglas C. Schmidt, "The Reactor: An Object-Oriented Interface for Event-Driven UNIX I/O Multiplexing," *C++ Report*, SIGS, Vol. 5, No. 2, February, 1993, pp. 1-12.

M2 Douglas C. Schmidt, "IPC_SAP: An Object-Oriented Interface to Operating System Interprocess Communication Services," *C++ Report*, SIGS, Vol. 4, No. 8, November/December, 1992, pp. 1-10.

M1 Douglas C. Schmidt, "Systems Programming with C++ Wrappers: Encapsulating Interprocess Communication Services with Object-Oriented Interfaces," *C++ Report*, SIGS, Vol. 4, No. 7, September/October, 1992, pp 1-6.

- **Refereed Short Papers, Posters, and Demos**

P14 Maria Powell, Marcelino Rodriguez Cancio, David Young, William Nock, Beshoy Abdelmessih, Amy Zeller, Irvin Perez Morales, Peng Zhang, C. Gaelyn Garrett, Douglas Schmidt, Jules White, and Alexander Gelbard, "Decoding Phonation with Artifical Intelligence: Proof of Concept," Poster Proceedings in the 13th International Conference on Advances in Quantitative Laryngology, Voice and Speech Research, Montreal, Canada, June 2-4th, 2019.

P13 Akram Hakiri, Berthou Pascal, Gayraud Thierry, Aniruddha Gokhale, Joe Hoffert, and Douglas C. Schmidt, "SIP-based QoS Support and Session Management for DDS-based Distributed Real-time and Embedded Systems," Poster Proceedings of the 5th ACM International Conference on Distributed Event-based Systems (DEBS'11), New York City, NY, USA, July 11-15, 2011.

P12 Jules White, Andrey Nechypurenko, Egon Wuchner, and Douglas C. Schmidt "Automatic Role-based Constraint Solving for Real-Time and Embedded Systems: An Approach to Modeling Guidance", poster paper at the 14th Annual IEEE International Conference and Workshop on the Engineering of Computer Based Systems (ECBS), March 26th-29th, 2007, Tucson, Arizona.

P11 John Kinnebrew, Nishanth Shankaran, Gautam Biswas, and Douglas Schmidt, "A Decision-Theoretic Planner with Dynamic Component Reconfiguration for Distributed Real-Time Applications," Poster paper at the Twenty-First National Conference on Artificial Intelligence, July 16 20, 2006, Boston, Massachusetts.

P10 Jai Balasubramanian, Nishanth Shankar, Douglas C. Schmidt, Gautam Biswas, Patrick Lardieri, Ed Mulholland, and Tom Damiano, "A Framework for (Re)Deploying Components in Distributed Realtime and Embedded Systems," poster paper at the Dependable and Adaptive Distributed Systems, Track of the 21st ACM Symposium on Applied Computing, April 23 -27, 2006, Bourgogne University, Dijon, France.

P9 Jules White and Douglas C. Schmidt, Reducing Enterprise Product Line Architecture Deployment Costs via Model-Driven Deployment and Configuration Testing, Poster paper at the 13th Annual IEEE International Conference and Workshop on the Engineering of Computer Based Systems (ECBS '06) March 27th-30th, 2006, University of Potsdam, Potsdam, Germany.

P8 Arvind S. Krishna, Aniruddha Gokhale, Douglas C. Schmidt, John Hatcliff, and Venkatesh Prasad Ranganat, "Towards Highly Optimized Real-time Middleware for Software Product-line Architectures," Proceedings of the Work-In-Progress session at the 26th IEEE Real-Time Systems Symposium, December 5-8, 2005, Miami, Florida.

P7 Gan Deng, Douglas Schmidt, and Aniruddha Gokhale, "Supporting Configuration and Deployment of Component-based DRE Systems Using Frameworks, Models, and Aspects," Poster Session of the 20th Annual ACM SIGPLAN Conference on Object-Oriented Programing, Systems, Languages and Applications (OOPSLA 2005), San Diego, CA, October 16-20, 2005.

P6 Jules White, Douglas Schmidt, and Aniruddha Gokhale, "The J3 Process for Building Autonomic Enterprise Java Bean Systems," Proceedings of the International Conference on Autonomic Computing (ICAC 2005), Seattle, WA, June 2005 (short paper).

P5 Aniruddha Gokhale, Arvind Krishna and Douglas C. Schmidt, "CoSMIC: Addressing Crosscutting Deployment and Configuration Concerns of Distributed Real-time and Embedded Systems via Aspect-oriented and Model-driven Software Development," Demo Session, Fourth International Conference on Aspect-oriented Software Development (AOSD), Chicago, IL, Mar 2005.

P4 Aniruddha Gokhale, Krishnakumar Balasubramanian, Jaiganesh Balasubramanian, Arvind Krishna, George Edwards, Gan Deng, Jeff Parsons, Tao Lu, Balachandran Natarajan and Douglas C. Schmidt, "CoSMIC: Addressing Crosscutting Deployment and Configuration Concerns in QoS-sensitive Distributed Systems," 19th ACM OOPSLA Conference, Poster Session, Vancouver, Canada, Oct 2004.

P3 Joseph K. Cross and Douglas C. Schmidt, "Meta-Programming Techniques to Declaratively Optimize Middleware Policies and Mechanisms," Poster session at the IFIP/ACM Middleware 2001 International Conference on Distributed Systems Platforms, Heidelberg, Germany, November 12-16, 2001.

P2 Aniruddha Gokhale and Douglas C. Schmidt, "Design Principles and Optimizations for High Performance ORBs," ACM, *OOPSLA 97*, Poster Session, Oct 1997, Atlanta, GA, USA.

P1 Douglas C. Schmidt, "Performance Experiments on Alternative Methods for Structuring Active Objects in High-Performance Parallel Communication Systems," 9th ACM OOPSLA Conference, poster paper, Portland, Oregon, October, 1994, pp. 1-12.

- **Editorials and Book Forewords**

E95 Douglas C. Schmidt, "The Latest Work from the SEI: Microservices, Ransomware, and Agile in Government", SEI Blog, September 7th, 2019.

E94 Douglas C. Schmidt, "The Latest Work from the SEI: DevSecOps, Artificial Intelligence, and Cybersecurity Maturity Model Certification", SEI Blog, May 25th, 2020.

E93 Douglas C. Schmidt, "The Latest Work from the SEI: Penetration Testing, Artificial Intelligence, and Incident Management", SEI Blog, January 20th, 2019.

E92 Douglas C. Schmidt, "The Top 10 Blog Posts of 2019, SEI Blog, January 6th, 2020.

E91 Nick Guertin, Douglas C. Schmidt, and William Scherlis, "Impacts and Recommendations for Achieving Modular Open Systems Architectures, SEI Blog, September 23rd, 2019.

E90 Douglas C. Schmidt, "The Latest Work from the SEI: AI, Deepfakes, Automated Alert Handling, and Cyber Intelligence," SEI Blog, September 2nd, 2019.

E89 Douglas C. Schmidt, "The Latest Research from the SEI in DevSecOps, Threat Modeling, and Insider Threat," SEI Blog, May 28th, 2019.

E88 Douglas C. Schmidt, "Deep Learning, Agile-DevOps, and Cloud Security: The Top 10 Blog Posts of 2018," SEI Blog, January 7th, 2019.

E87 Nick Guertin, Douglas C. Schmidt, and William Scherlis, "The Technical Architecture for Product Line Acquisition in the DoD," SEI Blog, May 6th, 2019.

E86 Nick Guertin, Douglas C. Schmidt, and William Scherlis, "The Organizational Impact of a Modular Product Line Architecture in DoD Acquisition," SEI Blog, April 29th, 2019.

E85 Nick Guertin, Douglas C. Schmidt, and William Scherlis, "Towards a New Model of Acquisition: Product-Line Architectures for the DoD," SEI Blog, March 11th, 2019.

E84 Douglas C. Schmidt, "Deep Learning, Agile-DevOps, and Cloud Security: The Top 10 Blog Posts of 2018," SEI Blog, January 7th, 2019.

E83 Nick Guertin, Douglas C. Schmidt, and William Scherlis, "Emerging Opportunities in Modularity and Open Systems Architectures," SEI Blog, October 15th, 2018.

E82 Douglas C. Schmidt, "Learning, Cyber Intelligence, Managing Privacy and Security, and Network Traffic Analysis: The Latest Work from the SEI," SEI Blog, July 2, 2018.

E81 Douglas C. Schmidt, "Virtual Integration, Blockchain Programming, and Agile/DevOps: The Latest Work from the SEI," SEI Blog, May 28, 2018.

E80 Douglas C. Schmidt, "Fighting Chance: Arming the Analyst in the Age of Big Data," SEI Blog, March 26, 2018.

E79 Douglas C. Schmidt, "Agile/DevOps, Best Practices in Insider Threat, and Dynamic Design Analysis: The Latest Work from the SEI," SEI Blog, February 26, 2018.

E78 Douglas C. Schmidt, "Bitcoin, Blockchain, Machine Learning, and Ransomware: The Top 10 Posts of 2017," SEI Blog, January 8, 2018.

E77 Douglas C. Schmidt, "Cyber Warfare, Technical Debt, Network Border Protection, and Insider Threat: The Latest Work from the SEI," SEI Blog, November 27, 2017.

E76 Douglas C. Schmidt, "Coordinated Vulnerability Disclosure, Ransomware, Scaling Agile, and Android App Analysis: The Latest Work from the SEI,SEI Blog, " September 5, 2017.

E75 Douglas C. Schmidt, "Top 10 SEI Blog Posts of 201I," SEI Blog, July 10, 2017.

E74 Douglas C. Schmidt, "Supply Chain Risk Management, Network Situational Awareness, Software Architecture, and Network Time Protocol: The Latest Work from the SEI," SEI Blog, July 3, 2017.

E73 Douglas C. Schmidt, "Software Assurance, Data Governance, and Malware Analysis: The Latest Work from the SEI," SEI Blog, April 10, 2017.

E72 Douglas C. Schmidt, "Preventing DDoS Attacks, Scaling Agile, Insider Threat, and Software Architecture: The Latest Work from the SEI," SEI Blog, January 30th, 2017.

E71 Douglas C. Schmidt, "Autonomy, Robotics, Verification, DDoS Attacks, and Software Testing: The Top 10 Posts of 2016," SEI Blog, December 19th, 2016.

E70 Douglas C. Schmidt, "Cybersecurity Engineering, Performance, Risk, and Secure Coding: The Latest Work from the SEI," SEI Blog, November 28th, 2016.

E69 Douglas C. Schmidt, "Resilience, Secure Coding, Data Science, Insider Threat, and Scheduling: The Latest Research from the SEI," SEI Blog, October 17th, 2016.

E68 Douglas C. Schmidt, "Data Science, Blacklists, and Mixed-Critical Software: The Latest Research from the SEI," SEI Blog, September 5th, 2016.

E67 Douglas C. Schmidt and Carol Sledge, "A Naval Perspective on Open Systems Architecture," SEI Blog, July 11th, 2016.

E66 Douglas C. Schmidt, "Top 10 SEI Blog Posts of 2016," SEI Blog, July 4th, 2016.

E65 Douglas C. Schmidt, "Top 10 SEI Blog Posts of 2016, SEI Blog, July 4th, 2016. Douglas C. Schmidt, Situational Analysis, Software Architecture, Insider Threat, Threat Modeling, and Honeynets: The Latest Research from the SEI," SEI Blog, May 30th, 2016.

E64 Douglas C. Schmidt, "Threat Analysis Mapping, Connected Vehicles, Emerging Technologies, and Cyber-Foraging: The Latest Research from the SEI," SEI Blog, May 2nd, 2016.

E63 Douglas C. Schmidt, "The Top 10 Blog Posts of 2015: Technical Debt, DevOps, Graph Analytics, Secure Coding, and Testing," January 4th, 2016.

E62 Carol Sledge and Douglas C. Schmidt, "A Discussion on Open-Systems Architecture," SEI Blog November 23rd, 2015.

E61 Douglas C. Schmidt, "Agile, Architecture Fault Analysis, the BIS Wassenaar Rule, and Computer Network Design," SEI Blog, September 7, 2015.

E60 Douglas C. Schmidt, "Testing, Agile Metrics, Fuzzy Hashing, Android, and Big Data" SEI Blog, July 13, 2015.

E59 Douglas C. Schmidt, "Resilience, Model-Driven Engineering, Software Quality, and Android App Analysis," SEI Blog, May 18, 2015.

E58 Douglas C. Schmidt, "Resilience, Metrics, Sustainment, and Software Assurance," SEI Blog, February 23, 2015.

E57 Douglas C. Schmidt, "Software Assurance, Social Networking Tools, Insider Threat, and Risk Analysis," SEI Blog, January 19th 2015.

E56 Douglas C. Schmidt, "The 2014 Year in Review," SEI blog, December 22nd, 2014.

E55 Douglas C. Schmidt, Android, Heartbleed, Testing, and DevOps: An SEI Blog Mid-Year Review, SEI blog, June 30th, 2014.

E54 Douglas C. Schmidt, "The Importance of Automated Testing in Open Systems Architecture Initiatives," SEI blog, March 23rd, 2014.

E53 Douglas C. Schmidt, "How Vanderbilt's Secret Software Lab Is Saving America," gizmodo.com, January 10th, 2014.

E52 Douglas C. Schmidt, "The SEI Blog: the Research Year in Review," SEI blog, December 23rd, 2013.

E51 Douglas C. Schmidt "The Architectural Evolution of DoD Combat Systems," SEI blog, November 25th, 2013.

E50 Douglas C. Schmidt, "Three Qs: Vanderbilt Professor Douglas Schmidt," GE's Industrial Internet blog, September 10th, 2013.

E49 Douglas C. Schmidt, "Towards Affordable DoD Combat Systems in the Age of Sequestration," SEI Blog, September 9th, 2013.

E48 Douglas C. Schmidt, "Ten Tech Terms Everyone Needs to Know for 2014," Yahoo Tech News, August 12, 2013.

E47 Douglas C. Schmidt and Philippe Fauchet, "Students Must Stay to Better Workforce," The Tennessean, August 6th, 2013.

E46 Douglas C. Schmidt, "Learning in MOOC Years," Vanderbilt Magazine, Spring 2013.

E45 Douglas C. Schmidt, The SEI Blog: A Two-year Retrospective, SEI blog, April 1st, 2013.

E44 Douglas C. Schmidt, 2012: "The Research Year in Review," SEI blog, December 24th, 2012.

E43 Douglas C. Schmidt, "Reflections on 20 Years of Architecture for Distributed Real-time and Embedded Systems by Douglas C. Schmidt," SEI blog, October 29th, 2012.

E42 Douglas C. Schmidt, "Applying Agility to DoD Common Operating Platform Environment Initiatives," SEI blog, July 30th, 2012.

E41 Douglas C. Schmidt, "Balancing Agility and Discipline at Scale," SEI blog, July 23rd, 2012.

E40 Douglas C. Schmidt, "Strategic Management of Architectural Technical Debt," SEI blog, July 16th, 2012.

E39 Douglas C. Schmidt, "Agile Methods: Tools, Techniques, and Practices for the DoD Community," SEI blog, July 9th, 2012.

E38 Douglas C. Schmidt, "Applying Agile at-Scale for Mission-Critical Software-Reliant Systems," SEI blog, July 2nd, 2012.

E37 Douglas C. Schmidt, "Toward Common Operating Platform Environments, Part 2: Understanding Success Drivers," SEI blog, May 7th, 2012.

E36 Douglas C. Schmidt, "Toward Common Operating Platform Environments, Part 1: Doing More for Less," SEI blog, April 30th, 2012.

E35 Douglas C. Schmidt, "The Road Ahead for SEI R&D in 2012," SEI blog, December 26th, 2011.

E34 Douglas C. Schmidt, "A Summary of Key SEI R&D Accomplishments in 2011," SEI blog, December 19th, 2011.

E33 Douglas C. Schmidt, "Bridging the Valley of Disappointment for DoD Software Research with SPRUCE," SEI blog, November 7th, 2011.

E32 Douglas C. Schmidt, "The Growing Importance of Software Sustainment for the DoD, Part 2: SEI R&D Activities Related to Sustaining Software for the DoD", SEI blog, August 15th, 2011.

E31 Douglas C. Schmidt, "The Growing Importance of Software Sustainment for the DoD, Part 1: Current Trends and Challenges", SEI blog, August 1st, 2011.

E30 Douglas C. Schmidt, "New and Upcoming SEI Research Initiatives," SEI blog, February 21st, 2011.

E29 Douglas C. Schmidt, "Advancing the Scope and Impact of SEI Research," SEI blog, February 9th, 2011.

E28 Douglas C. Schmidt, Foreword to the book *Patterns xof Parallel Software Design*, by Jorge Luis Ortega Arjona, Wiley, 2010.

E27 Douglas C. Schmidt, Foreword to the book *Practical Software Factories in .NET* by Gunther Lenz and Christoph Wienands, Apress, 2006.

E26 Douglas C. Schmidt, Guest editorial of the IEEE Computer Special Issue on Model Driven Development, February 2006.

E25 Douglas C. Schmidt, Guest editorial for IEEE Networks magazine Special Issue on Middleware Technologies for Future Communication Networks, January 2004.

E24 Douglas C. Schmidt, Foreword to the book *Fundamentals of Distributed Object Systems: The CORBA Perspective*, by Zahir Tari and Omran Bukhres, Wiley and Sons, 2001.

E23 Douglas C. Schmidt, Foreword to the book *Design Patterns in Communication Software*, edited by Linda Rising and published by Cambridge University Press, 2000.

E22 Douglas C. Schmidt, "Trends in Distributed Object Computing" editorial for the special issue on Distributed Object-Oriented Systems appearing in the Parallel and Distributed Computing Practices journal, edited by Maria Cobb and Kevine Shaw, Vol. 3, No. 1, March 2000.

E21 Douglas C. Schmidt, "Object-Oriented Application Frameworks," guest editorial for the of the Communications of the ACM, Special Issue on Object-Oriented Application Frameworks, Vol. 40, No. 10, October 1997.

E20 Douglas C. Schmidt, "Recent Advances in Distributed Object Computing," guest editorial for the IEEE Communications Magazine feature topic issue on Distributed Object Computing, Vol. 14, No. 2, February, 1997.

E19 Douglas C. Schmidt, Guest editorial for the USENIX Computing Systems Special Issue on Distributed Object Computing Vol. 9, No. 4, November/December, 1996.

E18 Douglas C. Schmidt, "Software Patterns," guest editorial for Communications of the ACM, Special Issue on Patterns and Pattern Languages, Vol. 39, No. 10, October 1996.

E17 Douglas C. Schmidt, "Using Design Patterns to Develop Reuseable Object-Oriented Software," Strategic Directions in Computing Research OO Working Group conference, MIT, June 14-15, 1996.

E16 Douglas C. Schmidt, "The Last Waltz," C++ Report, SIGS, Vol. 11, No. 4, April 1999.

E15 Douglas C. Schmidt, "Patterns++ - the Next Generation," C++ Report, SIGS, Vol. 9, No. 4, April 1997.

E14 Douglas C. Schmidt, "CORBA: CASE for the late '90s?" C++ Report, SIGS, Vol. 9, No. 2, February 1997.

E13 Douglas C. Schmidt, "Java: Friend or Foe," C++ Report, SIGS, Vol. 9, No. 1, January 1997.

E12 Douglas C. Schmidt, "Promise Keepers," C++ Report, SIGS, Vol. 8, No. 11, November/December 1996.

E11 Douglas C. Schmidt, "The Programming Principle," C++ Report, SIGS, Vol. 8, No. 10, October 1996.

E10 Douglas C. Schmidt, "Pattern Forces," C++ Report, SIGS, Vol. 8, No. 9, September 1996.

E9 Douglas C. Schmidt, "The Secrets of Success for C++," C++ Report, SIGS, Vol. 8, No. 9, August 1996.

E8 Douglas C. Schmidt, "The C++ Decade," C++ Report, SIGS, Vol. 8, No. 9, August 1996.

E7 Douglas C. Schmidt, "Addressing the Challenge of Concurrent and Distributed Systems," C++ Report, SIGS, Vol. 8, No. 7, July 1996.

E6 Douglas C. Schmidt, "Delivering the Goods," C++ Report, SIGS, Vol. 8, No. 6, June 1996.

E5 Douglas C. Schmidt, "Problems with Process," C++ Report, SIGS, Vol. 8, No. 5, May 1996.

E4 Douglas C. Schmidt, "The Impact of Social Forces on Software Project Failures," C++ Report, SIGS, Vol. 8, No. 4, April 1996.

E3 Douglas C. Schmidt, "Reality Check," C++ Report, SIGS, Vol. 8, No. 3, March 1996.

E2 Douglas C. Schmidt, "Role Models for Success," C++ Report, SIGS, Vol. 8, No. 2, February 1996.

E1 Douglas C. Schmidt, "A Zest for Programming," C++ Report, SIGS, Vol. 8, No. 1, January 1996.

- **Technical Reports**

TR18 Douglas C. Schmidt, "Google Data Collection," Vanderbilt University Technical Report #ISIS-20-201, August 15, 2018.

TR17 Gan Deng, Douglas C. Schmidt, Aniruddha Gokhale, " Ensuring Deployment Predictability of Distributed Real-time and Embedded Systems," Vanderbilt University Technical Report #ISIS-07-814, November 2007.

TR16 Jaiganesh Balasubramanian, Sumant Tambe, Chenyang Lu, Christopher Gill, Aniruddha Gokhale, and Douglas C. Schmidt, "FLARe: a Fault-tolerant Lightweight Adaptive Real-time Middleware for Distributed Real-time and Embedded, Systems," Vanderbilt University Technical Report #ISIS-07-812, October 2007.

TR15 Shanshan Jiang, Yuan Xue, and Douglas Schmidt, "Minimum Disruption Service Composition and Recovery in Mobile Ad hoc Networks," Vanderbilt University Technical Report #ISIS-06-711, December 2006.

TR14 Andrey Nechypurenko, Egon Wuchner, Jules White, Douglas C. Schmidt, " Application of Aspect-based Modeling and Weaving for Complexity Reduction in the Development of Automotive Distributed Real-time Embedded Systems," Vanderbilt University Technical Report #ISIS-06-709, July 2006.

TR13 James H. Hill, John M. Slaby, Steve Baker, Douglas C. Schmidt, "Predicting the Behavior for Components of the SLICE Scenario," Vanderbilt University Technical Report #ISIS-05-608, October 2005.

TR12 Stoyan Paunov, James Hill, Douglas C. Schmidt, John Slaby,and Steve Baker, "Domain-Specific Modeling Languages for Configuring and Evaluating Enterprise DRE System Quality of Service, Vanderbilt University Technical Report #ISIS-05-606, August 2005.

TR11 John M. Slaby, Steve Baker, James Hill, Doug Schmidt, "Applying System Execution Modeling Tools to Evaluate Enterprise Distributed Real-time and Embedded System QoS," Vanderbilt University Technical Report #ISIS-05-604, June 2005.

TR10 Fred Kuhns and Carlos O'Ryan and Douglas C. Schmidt and Jeff Parsons, "The Design and Performance of a Pluggable Protocols Framework for Object Request Broker Middleware," Washington University Technical Report #WUCS-99-12, St. Louis, MO, Dept. of Computer Science, April 1999.

TR9 Sumedh Mungee, Nagarajan Surendran, and Douglas C. Schmidt, "The Design and Performance of a CORBA Audio/Video Streaming Service," Washington University Technical Report #WUCS-98-15.

TR8 Lutz Prechelt, Barbara Unger, Douglas C. Schmidt, "Replication of the First Controlled Experiment on the Usefulness of Design Patterns: Detailed Description and Evaluation." 77 pgs., Washington University Technical Report #wucs-97-34, December 1997.

TR7 Aniruddha Gokhale and Douglas C. Schmidt, "Optimizing the Performance of the CORBA Internet Inter-ORB Protocol Over ATM," Washington University Technical Report #WUCS-97-10.

TR6 James Hu and Sumedh Mungee and Douglas C. Schmidt, "Principles for Developing and Measuring High-performance Web Servers over ATM," Washington University Technical Report #WUCS-97-10.

TR5 Chris Cleeland, Douglas C. Schmidt, and Tim H. Harrison, "External Polymorphism – An Object Structural Pattern for Transparently Extending Concrete Data Types," The 3rd annual Pattern Languages of Programming conference in Allerton Park, Illinois, September 4-6, 1996, Washington University Technical Report #WUCS-97-07.

TR4 Timothy H. Harrison, Douglas C. Schmidt, and Irfan Pyarali, "Asynchronous Completion Token," The 3rd annual Pattern Languages of Programming conference in Allerton Park, Illinois, September 4-6, 1996, Washington University Technical Report #WUCS-97-07.

TR3 Douglas C. Schmidt and Timothy H. Harrison, "The Double-Checked Locking Pattern," The 3rd annual Pattern Languages of Programming conference in Allerton Park, Illinois, September 4-6, 1996, Washington University Technical Report #WUCS-97-07.

TR2 Prashant Jain and Douglas C. Schmidt, "The Service Configurator Pattern," The 3rd annual Pattern Languages of Programming conference in Allerton Park, Illinois, September 4-6, 1996, Washington University Technical Report #WUCS-97-07.

TR1 Douglas C. Schmidt, "Acceptor and Connector: Design Patterns for Initializing Network Services," The EuroPLoP '96 conference in Kloster Irsee, Germany, July 10-14, 1996, Washington University Technical Report #WUCS-97-07.

Presentations

Conference Presentations

1. "Mobile Applications Technology Overview," Digital Technologies in Cancer Research Workshop, Vanderbilt University, Nashville, TN, May 15th 2019.

2. "Website Applications Technology Overview," Digital Technologies in Cancer Research Workshop, Vanderbilt University, Nashville, TN, May 15th 2019.
3. "Producing and Delivering a Coursera MOOC on Pattern-Oriented Software Architecture for Concurrent and Networked Software," WaveFront forum at the SPLASH 2013 conference, Indianapolis, IN, October 29th, 2013.
4. "Addressing the Challenges of Tactical Information Management in Net-Centric Systems with the OMG Data Distribution Service (DDS)," the 16th International ACM Workshop on Parallel and Distributed Real-Time Systems (WPDRTS '08), Miami, Florida, April 14, 2008.
5. "The Design and Performance of Configurable Component Middleware for End-to-End Adaptation of Distributed Real-time Embedded Systems," proceedings of the 10th IEEE International Symposium on Object/Component/Service-oriented Real-time Distributed Computing (ISORC), May 7-9, 2007, Santorini Island, Greece.
6. "A Decision-Theoretic Planner for DRE Systems," 7th OMG Real-time/Embedded CORBA workshop, Arlington, VA, July 10–13, 2006.
7. "Model-driven QoS Provisioning for Real-time CORBA and CCM DRE Systems," 6th OMG Real-time/Embedded CORBA workshop, Arlington, VA, July 11–14, 2005.
8. "Research Advances in Middleware for Distributed Systems: State of the Art," Computer Communications stream of the 17th IFIP World Computer Congress, Montreal, Canada, August 25-30, 2002.
9. "Towards Highly Configurable Real-time Object Request Brokers," the IEEE International Symposium on Object-Oriented Real-time Distributed Computing (ISORC), Washington DC, April 29 – May 1, 2002.
10. "Operating System Performance in Support of Real-time Middleware," Proceedings of the 7th IEEE Workshop on Object-oriented Real-time Dependable Systems, San Diego, CA, January, 2002.
11. "Designing an Efficient and Scalable Server-side Asynchrony Model for CORBA," Proceedings of the ACM SIGPLAN Workshop on Optimization of Middleware and Distributed Systems (OM 2001), Snowbird, Utah, June 18, 2001.
12. "DOORS: Towards High-performance Fault-Tolerant CORBA," Proceedings of the 2nd International Symposium on Distributed Objects and Applications (DOA '00), OMG, Antwerp, Belgium, September 2000.
13. "The Design and Performance of a CORBA Audio/Video Streaming Service," Proceedings of the 31st Hawaii International Conference on System Systems (HICSS), Hawaii, January, 1999, minitrack on Multimedia DBMS and the WWW, Hawaii, January 1999.
14. "Alleviating Priority Inversion and Non-determinism in Real-time CORBA ORB Core Architectures," Proceedings of the Fourth IEEE Real-Time Technology and Applications Symposium (RTAS), Denver, Colorado, June 3-5, 1998
15. "Optimizing the Performance of the CORBA Internet Inter-ORB Protocol Over ATM," Proceedings of the 31st Hawaii International Conference on System Systems (HICSS), Hawaii, January, 1998. This was selected as the best paper in the Software Technology Track (188 submitted, 77 accepted).
16. "The Double-Checked Locking Pattern," *Proceedings of the 3rd annual Pattern Languages of Programming conference* in Allerton Park, Illinois, September 4-6, 1996.
17. "Acceptor and Connector: Design Patterns for Initializing Network Services," Proceedings of the EuroPLoP '96 conference, Kloster Irsee, Germany, July 10-14, 1996.
18. "Measuring the Performance of Communication Middleware on High-Speed Networks," Proceedings of SIGCOMM '96, ACM, San Francisco, August 28-30th, 1996.
19. "Design and Performance of an Object-Oriented Framework for High-Speed Electronic Medical Imaging," Proceedings of the 2nd Conference on Object-Oriented Technologies and Systems (COOTS), USENIX, Toronto, June 18-22, 1996.
20. "A Family of Design Patterns For Flexibly Configuring Network Services in Distributed Systems," Proceedings of the International Conference on Configurable Distributed Systems, IEEE, Annapolis, Maryland, May 6-8, 1996.

21. "Using Design Patterns to Develop High-Performance Object-Oriented Communication Software Frameworks," Proceedings of the 8th Annual Software Technology Conference, Salt Lake City, Utah, April 21-26, 1996.
22. "An Object-Oriented Framework for High-Performance Electronic Medical Imaging," Proceedings of the *Very High Resolution and Quality Imaging* mini-conference at the Symposium on Electronic Imaging in the International Symposia Photonics West 1996, SPIE, San Jose, California USA, January 27 - February 2, 1996.
23. "Half-Sync/Half-Async: A Pattern for Efficient and Well-structured Concurrent I/O," *Proceedings of the* 2nd *Pattern Languages of Programs Conference* Monticello, Illinois, September 6-8, 1995.
24. "Acceptor and Connector: Design Patterns for Actively and Passively Initializing Network Services." Workshop on Pattern Languages of Object-Oriented Programs at ECOOP '95, August 7 – 1, 1995, Aarhus, Denmark.
25. "Object-Oriented Components for High-speed Network Programming," *Proceedings of the Conference on Object-Oriented Technologies (COOTS)*, USENIX, June 26-29, 1995 Monterey, California, USA, pp. 21–38.
26. "Experience Using Design Patterns to Evolve Communication Software Across Diverse OS Platforms," *Proceedings of the* 9th *European Conference on Object-Oriented Programming (ECOOP)*, ACM, Aarhus, Denmark, August, 1995,.
27. "Measuring the Performance of Parallel Message-based Process Architectures," *Proceedings of the INFOCOM Conference on Computer Communications*, IEEE, Boston, MA, April, 1995, pp. 624–633.
28. "High-Performance Event Filtering for Dynamic Multi-point Applications," Proceedings of the 1st Workshop on High Performance Protocol Architectures (HIPPARCH), INRIA, Sophia Antipolis, France, December, 1994, p 1–8.
29. "Flexible Configuration of High-Performance Object-Oriented Distributed Communication Systems," 9th *OOPSLA Conference, invited paper to the Workshop on Flexibility in Systems Software*, ACM, Portland, Oregon, October, 1994, pp. 1–4.
30. "Performance Experiments on Alternative Methods for Structuring Active Objects in High-Performance Parallel Communication Systems," 9th *OOPSLA Conference, poster session*, ACM, Portland, Oregon, October, 1994, pp. 1–12.
31. "Measuring the Impact of Alternative Parallel Process Architectures on Communication Subsystem Performance," *Proceedings of the Proceedings of the* 4th *International Workshop on Protocols for High-Speed Networks*, IFIP, Vancouver, British Columbia, August, 1994, pp. 103–118.
32. "Reactor: An Object Behavioral Pattern for Concurrent Event Demultiplexing and Dispatching," *Proceedings of the* 1st *Annual Conference on the Pattern Languages of Programs*, Monticello, Illinois, August, 1994, pp. 1–10.
33. "Experiences with an Object-Oriented Architecture for Developing Dynamically Extensible Network Management Software," *Proceedings of the Globecom Conference*, IEEE, San Francisco, California, November, 1994, pp. 1–7.
34. "Configuring Function-based Communication Protocols for Distributed Applications," *Proceedings of the* 8th *International Working Conference on Upper Layer Protocols, Architectures, and Applications*, IFIP, Barcelona, Spain, June 1-3, 1994, pp. 361–376.
35. "The ADAPTIVE Service Executive: An Object-Oriented Architecture for Configuring Concurrent Distributed Communication Systems," *Proceedings of the* 8th *International Working Conference on Upper Layer Protocols, Architectures, and Applications*, IFIP, Barcelona, Spain, June 1-3, 1994, pp. 163–178.
36. "ASX: An Object-Oriented Framework for Developing Distributed Applications," *Proceedings of the* 6th *C++ Conference*, USENIX, Cambridge, Massachusetts, April, 1994, pp. 200–220.
37. "The Service Configurator Framework: An Extensible Architecture for Dynamically Configuring Concurrent, Multi-service Network Daemons," *Proceedings of the* 2nd *International Workshop on Configurable Distributed Systems*, IEEE, Pittsburgh, PA, March 21-23, 1994, pp. 190–201.

38. "Tools for Generating Application-Tailored Multimedia Protocols on Heterogeneous Multi-Processor Platforms," *Proceedings of the* 2nd *Workshop on High-Performance Communications Subsystems*, IEEE, Williamsburg, Virginia, September 1-3, 1993, pp. 1–7.
39. "A Framework for Developing and Experimenting with Parallel Process Architectures to Support High-Performance Transport Systems," *Proceedings of the* 2nd *Workshop on High-Performance Communications Subsystems*, IEEE, Williamsburg, Virginia, September 1-3, 1993, pp. 1–8.
40. "ADAPTIVE: a Framework for Experimenting with High-Performance Transport System Process Architectures," *Proceedings of the* 2nd *International Conference on Computer Communications and Networks*, ISCA, San Diego, California, June 28-30, 1993, pp. 1–8.
41. "ADAPTIVE: A Flexible and Adaptive Transport System Architecture to Support Lightweight Protocols for Multimedia Applications on High-Speed Networks," *Proceedings of the* 1st *Symposium on High Performance Distributed Computing*, IEEE, Syracuse, New York, September 9-11, 1992, pp. 174–186.
42. "GPERF: A Perfect Hash Function Generator," *Proceedings of the* 2nd *C++ Conference*, USENIX, San Francisco, California, April 9-11, 1990, pp. 87–102.

Invited Talks

1. "Cyber-Security and You: Practicing Safe Surfing on the Internet," the National Active and Retired Federal Employees (NARFE) chapter, Nashville TN, January 13th, 2021.
2. "Challenges of Certifying Adaptive Dynamic Computing Environments," DARPA/SEI Software Engineering Grand Challenges and Future Visions Workshop, December 1st, 2020.
3. "Survelliance Capitalism and You," invited talk at the Southeast Science Boot Camp, Nashville, TN, May 29th, 2019.
4. "Diversify Sponsorship of Your Research: Getting Funding from the Department of Defense," Office of Research Development and Support Workshop, October 22nd, 2018, Nashville, TN.
5. "Survelliance Capitalism and You," invited talk at the Memorizing the Future: Collecting in the 21st Century Conference, Nashville, TN, October 6th, 2018.
6. "Aligning Incentives to Enable More Effective Organic Software Infrastructure for the DoD," DoD Organic Software Infrastructure Workshop, Arlington VA, August 13th, 2018.
7. "The Blockchain: What It is and Why It Matters to Us," Transforming Dermatology in the Digital Era, Memorial Sloan Kettering Cancer Center, October 25, 2018, NY, NY, USA.
8. "Aligning Incentives to Enable Modular Open Software for DoD Combat Systems," Modular Open Systems Summit, May 1st, 2018, Washington DC.
9. "The Blockchain: What It is and Why It Matters to Us," Society of Women Engineers, Vanderbilt University, March 14th, 2018.
10. "The Blockchain: What It is and Why It Matters to Us," Invited keynote at the Workshop on Middleware and Applications for the Internet of Things, (co-located with the 2017 Middleware conference in Las Vegas, USA), December 11th and 12th, 2017.
11. "The Blockchain: What It is and Why It Matters," Vanderbilt University, Nashville, TN, November 28th, 2017.
12. "The Blockchain: What It is and Why It Matters," INTERFACE Nashville conference, Nashville, TN, August 24th, 2017.
13. "Applying Blockchain to Healthcare Systems," panel presentation at the Siemens Blockchain Conference, Nuremburg, Germany, May 10th, 2017.
14. "A Primer on Big Data," Vanderbilt University Board of Trust meeting, April 21st, 2017, Nashville TN.
15. "The Past, Present, and Future of MOOCs and Their Importance for Software Engineering," Distinguished Lecture, University of Illinois Chicago, Chicago, IL, November 18th, 2016.
16. "Agility-at-Scale for Safety- and Mission-Critical Industrial-Scale Systems," INFORMS Annual Conference, Nashville, TN November 13th, 2016.

17. "Product Line Architectures for Open System Architectures," Varian, Winnipeg, Canada, October 7th, 2016.
18. "Agility-at-Scale for Safety- and Mission-Critical Industrial-Scale Systems," Siemens Architecture Workshop, Tarrytown, NY, September 27th, 2016.
19. "Product Line Architectures for Oncology Treatment Services," Varian, Palo Alto, CA, September 16th, 2016.
20. "Innovation and Speed: The Rise of Open Systems," the United States Technology Leadership Council, Reston, VA, August 24th, 2016.
21. "Elastic Software Infrastructure to Support the Industrial Internet," the Siemens CPS Workshop, Munich, Germany, August 1st, 2016.
22. "Challenges of Certifying Adaptive Dynamic Computing Environments," Workshop on Safety And Control for AI, Sponsored by the White House Office of Science and Technology Policy and Carnegie Mellon University, Pittsburgh, PA, June 28th, 2016.
23. "Keeping an Unfair Advantage in a Globalized and Commoditized World," Raytheon Symposium, Tucson, AZ, May 5th, 2016.
24. "Towards Technical Reference Frameworks to Support Open System Architecture Initiatives," Office of the Secretary of Defense (OSD) System of Systems Engineering Collaborators Information Exchange, December 15th 2015.
25. "Enterprise System of Systems Engineering (SoSE) Integration and Innovation," presentation at the US Marine Corp Business Management Association meeting, Quantico, VA, December 10th, 2015.
26. "An Architecture Grand Challenge: DOD's push for Open Systems Architecture," panel presentation at the Software Solutions Conference, Crystal City, VA, November 17th, 2015.
27. "Elastic Software Infrastructure to Support the Industrial Internet," the Siemens CPS Workshop, Munich, Germany, September 29th, 2015.
28. "An Overview of Mobile and mHealth Activities at ISIS and Vandy EECS," Patient Engagement Emerging Technologies, Vanderbilt University, Nashville, TN, August 10, 2015.
29. "Mobile Cloud Computing with Android," Google I/O, Mercury Intermedia Systems, Nashville, TN, May 28th, 2015.
30. "An Architecture Grand Challenge: DOD's push for Open Systems Architecture," panel presentation at the SATURN 2015 Conference, Baltimore, MD, April 27th, 2015.
31. "'Elastic Software Infrastructure to Support Computing Clouds for Cyber-Physical Systems," Distinguish Lecture, Texas A&M, April 27th, 2015.
32. "Elastic Software Infrastructure to Support Computing Clouds for Cyber-Physical Systems", Boeing Distinguished Researcher And Scholar Seminar (B-DRASS) series, March 20th, Huntingon Beach, CA.
33. "Elastic Software Infrastructure to Support Computing Clouds for Cyber-Physical Systems," Distinguished Lecture, University of California, Irvine, February 27th, 2015.
34. "Elastic Software Infrastructure to Support Computing Clouds for Cyber-Physical Systems," Varian, Palo Alto, CA, January 15th, 2015.
35. "Keeping an Unfair Advantage in a Globalized and Commoditized World," Open Architecture Summit, Washington DC, November 4th, 2014.
36. "Proposal for a Professional Masters degree in Computer Science," invited talk at Vanderbilt University School of Engineering's Board of Visitor's meeting, October 10th, 2014.
37. "The Past, Present, and Future of Open System Architecture Initiatives," invited keynote at the Future Airborne Capabilities Environment meeting, Nashville, TN, September 24th.
38. "Future Proofing Research and Development Investments in a Globalized, Commoditized World," Boeing Technical Excellence Conference, May 20th, 2014, St. Louis, MO.
39. "Elastic Software Infrastructure to Support the Computing Clouds for Cyber-Physical Systems (CC4CPS)," Securboration Conference, November 12th, 2013, Melbourne, Florida.

40. "The Importance of Automated Testing in Open Systems Architecture Initiatives," Open Architecture Summit, November 12th, 2013, Washington DC.
41. Conference on Cloud and Mobile Computing, Siemens Corporate Research, Princeton, NJ, November 5th, 2013.
42. "Overview of the Technology Entrepreneurship Task Force," Innovation, Imagination, and Introductions: A Conversation with Entrepreneurs, Vanderbilt University, October 24th, 2013.
43. "Producing and Delivering a Coursera MOOC on Pattern-Oriented Software Architecture for Concurrent and Networked Software," Vanderbilt University's Faculty Senate committee on Strategic Planning and Academic Freedom, October 23rd, 2013.
44. "Elastic Software Infrastructure to Support the Industrial Internet," RTI Webinar series, October 23rd, 2013.
45. "The Importance of Applying Agility to DoD Software Initiatives," IEEE Computer Society Lockheed Martin webinar series, October 10th, 2013.
46. "Technology Entrepreneurship Task force: Charter and Progress Update," Vanderbilt University School of Engineering Board of Visitors meeting, October 4th, 2013.
47. "Stochastic Hybrid Systems Modeling and Middleware-enabled DDDAS for Next-generation USAF Combat Systems," AFOSR DDDAS PI meeting, Arlington, VA, October 1st, 2013.
48. "Producing and Delivering a Coursera MOOC on Pattern-Oriented Software Architecture for Concurrent and Networked Software," WithIT seminar, Vanderbilt University, September 12th, 2013.
49. "Applying Agility to the US Department of Defense Common Operating Platform Environment Initiatives," Interoperable Open Architecture conference, Washington DC, September 11th, 2013.
50. "Software Infrastructure Support of Computing Clouds for Cyber-Physical Systems," invited talk at Real-Time Innovations, July 31st, 2013, Sunnyvale, California.
51. "Introduction to the Institute for Software Integrated Systems," Nashville Entrepreneur Center, July 15th, 2013.
52. "Surviving the Coursera Digital Learning Experience," Coursera-in-TN Conference, Vanderbilt University, Nashville, TN, June 24th, 2013.
53. "Quo Vadis ISORC?," Panel presentation at ISORC 2013 Conference, June 19th, 2013, Paderborn, Germany.
54. "Software Infrastructure Support of Computing Clouds for Cyber-Physical Systems," invited keynote for ISORC 2013 Conference, June 19th, 2013, Paderborn, Germany.
55. "Towards Programming Models and Paradigms for Computing Clouds that Support Cyber-Physical Systems," NSF Workshop on Computing Clouds for Cyber-Physical Systems, March 15th, 2013, Ballston, VA.
56. "Built to Last: Planning Your Career as an Engineer," STEM contest on Securing Cyber Space, Brentwood High School, March 9th, 2013, Nashville, TN.
57. "Experience with Digital Learning and MOOCs at Vanderbilt," Nashville, TN, Feb 22nd, 2013.
58. "Software Design: Is It Really Better to Look Good Than to Feel Good?," World IA Day, Nashville, TN, Feb 9th, 2013.
59. "Pattern-Oriented Software Architectures: Patterns and Frameworks for Concurrent and Networked Software," PhreakNIC 2012, Murfreesboro, TN, November 9th, 2012.
60. "Applying Agility to the US Department of Defence Common Operating Platform Environment Initiatives," Interoperable Open Architecture 2012, 29 - 31 October, 2012, London, UK.
61. "Open System Architectures: Challenges and Success Drivers," OA Summit conference, Washington, DC, October 18th, 2012.
62. "Dependable Computing Clouds for Cyber-Physical Systems," Dependability Issues in Cloud Computing Workshop, October 11th, 2012, Irvine, CA.
63. "Computing Clouds for Cyber-Physical Systems," Reliable Cloud Infrastructure for CPS Applications Workshop, October 8th, 2012, Irvine, CA.

64. "Common Operating Platform Environments: Challenges and Success Drivers," Navy Open Systems Architecture workshop, Ballston, VA, September 27th, 2012.
65. "Meeting the Challenges of Enterprise Distributed Real-time and Embedded Systems," talk for Honeywell Aerospace, September 21, 2012.
66. "Architecture-Led Iterative and Incremental Development for Common Operating Platform Environments," NITRD Software Design and Productivity meeting, National Coordination Office, Ballston, VA, July 13th, 2012.
67. "Cyber-physical multi-core Optimization for Resource and cachE effectS," Software-Intensive Systems Producibility workshop, Arlington VA, June 5th, 2012.
68. "Applying Agility to DoD Common Operating Platform Environment Initiatives", SEI Agile Research Forum, May 22nd, 2012.
69. "Meeting the Challenges of Enterprise Distributed Real-time and Embedded Systems," keynote talk at the SATURN Conference 2012 May 7-11, 2012, St. Petersburg, FL.
70. "Reflections on 20 Years of Architecture for Distributed Real-time and Embedded Systems," SATURN Conference 2012 May 7-11, 2012, St. Petersburg, FL.
71. "US Naval Open Systems Architecture Strategy," SATURN Conference 2012 May 7-11, 2012, St. Petersburg, FL.
72. "Towards Open Systems Architectures for Distributed Real-time and Embedded Systems," The Center for Embedded Systems for Critical Applications, Annual Workshop, Virginia Tech, Blackburg, VA April 21st, 2012.
73. "Overview of the SEI Strategic Research Plan," ASD(R&E) Annual Program Review, December 7th, 2011, Pittsburgh, PA.
74. "Overview of the SEI Strategic Research Plan," Acquisition Support Program meeting, November 16th, 2011, Pittsburgh, PA.
75. "Conducting Leading-Edge Software R&D in a Globalized, Commoditized World," NITRD Software Design and Productivity meeting, National Coordination Office, Ballston, VA, November 3rd, 2011.
76. "A Technical Assessment of Open Architecture Systems for Military Use," Interoperable Open Architecture, 26th-28th October 2011, London, UK.
77. "Conducting Leading-Edge Software R&D in a Globalized, Commoditized World," Technovation 2011, Carnegie Mellon University, September 29th, 2011.
78. "CTO Report," SEI Board of Visitors Meeting, Arlington, VA, September 27th, 2011.
79. "Overview of the SEI Strategic Research Plan," Joint Advisory Committee Meeting, Arlington, VA, September 26th, 2011.
80. "Successful Development Efforts: Standards, People, & Culture: The Enterprise Perspective," Software Assurance (SwA) Forum, September 16th, 2011, Arlington, VA.
81. "Ultra-Large-Scale (ULS) Cyberphysical Systems and Their Impact on Technology and Society," University of Salzburg, June 30th, 2011, Salzburg, Austria.
82. "Ultra-Large-Scale (ULS) Cyberphysical Systems and Their Impact on Technology and Society," ARTEMIS conference, June 29th, 2011, Linz, Austria.
83. "Ultra-Large-Scale Systems and Their Impact on the DoD," Systems and Software Technology Conference Committee, keynote presentation at the 23rd Systems and Software Technology Conference, May 16-19, 2011, Salt Lake City, Utah.
84. "Ultra-Large Scale Systems and their Impact on Technology and Society," keynote presentation at the International Symposium on Object-Oriented Real-time Distributed Computing¡/A¿ (ISORC), Newport Beach, CA, March 29th, 2011.
85. "Software-reliant Systems Research at the Software Engineering Institute," Raytheon, Sudbury, MA, March 10, 2011.
86. "Review of COE Practices," US Army Senior Leadership Education Program, Pittsburgh, PA, January 20th, 2011.

87. "Software Producibility for Defense," US Army Senior Leadership Education Program, Pittsburgh, PA, January 18th, 2011.
88. "SEI Research: The Shape of Things to Come," ASP Meeting, Software Engineering Institute, Pittsburgh, PA, December 9th, 2010.
89. "R&D at ASP," ASP Air Force Training Day, Software Engineering Institute, Pittsburgh, PA, December 9th, 2010.
90. "Software-reliant Systems Research at the Software Engineering Institute," Siements Corporate Research, Princeton, NJ, November 22nd, 2010.
91. "Taming the Complexity of Software-Reliant Systems," Software Engineering Process Group conference, Colombia, South America, November 11th, 2010.
92. "SEI Technical Presentations," Joint Advisory Committee Meeting, Arlington, VA, October 26th, 2010.
93. "SEI Research: The Shape of Things to Come," ASP Meeting, Software Engineering Institute, Pittsburgh, PA, October 20th, 2010.
94. "SEI Research: The Shape of Things to Come," SEPM Meeting, Software Engineering Institute, Pittsburgh, PA, October 19th, 2010.
95. "Strategic Directions for Research at the SEI," RTSS Offsite Meeting, Pittsburgh, PA, October 12th, 2010.
96. "The World is Flat and What You Can Do About It," Family Weekend, October 9th, 2010, Vanderbilt University.
97. "SEI Research: The Shape of Things to Come," SEI Board of Visitor's Meeting, Arlington, VA, September 28th, 2010.
98. "SEI Research: The Shape of Things to Come," PD&T Meeting, Software Engineering Institute, Pittsburgh, PA, September 20th, 2010.
99. "Introduction and Initial Thoughts," RTSS Meeting, Software Engineering Institute, Pittsburgh, PA, August 19th, 2010.
100. "The Impact of Ultra-Large-Scale Systems on DoD Operations," Congressional R&D Caucus, Rayburn Building, Washington DC, January 19th, 2010.
101. "The World is Flat and What You Can Do About It," Explorers meeting, January 12th, 2010, Vanderbilt University.
102. "Expectations for University - Industry Collaborative Research in CPS," Computing Community Consortium Workshop on New Forms of Industry-Academy Partnerships in CPS Research, George Mason University, May 19th, 2009.
103. "How Good is Your SOA?", Panel presentation at the AFRL QED PI meeting, April 28th, 2009, Washington DC.
104. "The World is Flat and What You Can Do About It," ES 140, Computer Science module, October 31st, 2008, Vanderbilt University.
105. "Meeting the Challenges of Ultra-Large-Scale Distributed Real-time and Embedded Systems with QoS-enabled Middleware and Model-Driven Engineering," Panel on Growing and Sustaining Ultra Large Scale (ULS) Systems, OOPSLA 2008, Nashville TN, October 21-23 2008.
106. "The World is Flat and What You Can Do About It," Family Weekend Faculty Lecture, Vanderbilt University, October 3rd, 2008.
107. "The World is Flat and What You Can Do About It," Senior Design Seminar, Vanderbilt University, September 17th, 2008.
108. "The World is Flat and What You Can Do About It," CS WithIT Seminar, Vanderbilt University, September 11th, 2008.
109. "The Managed Motorway: Real-time Vehicle Scheduling - A Research Agenda," Qualcomm, July 28th, 2008, San Diego, CA.
110. "Meeting the Challenges of Mission-Critical Distributed Event-Based Systems with QoS-enabled Middleware and Model-Driven Engineering," 2nd International Conference on Distributed Event-Based Systems (DEBS), Rome Italy, July 2-4, 2008.

111. "Meeting the Challenges of Distributed Real-time and Embedded Systems with QoS-enabled Middleware and Model-Driven Engineering," SPAWAR, April 29th, 2008.
112. "Meeting the Challenges of Distributed Real-time and Embedded Systems with QoS-enabled Middleware and Model-Driven Engineering," Northrop Grumman, Boulder Colorado, April 25th, 2008.
113. "Experimentation Environment for QED," AFRL Information Management PI Meeting, April 16 2008, Georgetown, Washington, DC.
114. "Adaptive System Infrastructure for Ultra-Large-Scale Systems," SMART Conference, Carnegie Mellon University, March 6th, 2008.
115. "Experimentation Environment for QED", Air Force Research Lab, Rome, NY, March 4th, 2008.
116. "Ultra-Large-Scale (ULS) Systems and their Impact on Technology and Society," Clemson University, January 31st, 2008.
117. "Meeting the Challenges of Ultra-Large-Scale Distributed Real-time and Embedded Systems with QoS-enabled Middleware and Model-Driven Engineering, invited keynote talk at Middleware 2007, Irvine, CA, November 29th, 2007.
118. "The World is Flat and What You Can Do About It," Senior Design Seminar, Vanderbilt University, November 14th, 2007.
119. "Technology Candidates for QED," AFRL retreat, Minnowbrook, NY, October 23, 2007.
120. "Overview of ISIS and Proposed IU/CRC R&D Projects," Crystal City, VA, October 19th, 2007.
121. The Future of CORBA for Distributed Real-time and Embedded Systems, International Conference on Accelerator and Large Experimental Physics Control Systems, October 17, 2007, Knoxville, TN.
122. "AF-TRUST: Project Overview," Air Force Scientific Advisory Board review, Rome, NY, October 15th, 2007.
123. "Meeting the Challenges of Distributed Real-time and Embedded Systems with Product-Line Architectures," August 1st, 2007, Trinity College, Dublin, Ireland.
124. "Model Driven Engineering of Product-Line Architectures for Distributed Real-time and Embedded Systems," July 5th, 2007, University of Limerick, Ireland.
125. "Meeting the Challenges of Mission-Critical Systems with Middleware and Model Driven Engineering", OMG Technical Meeting, June 27, 2007, Brussels, Belgium.
126. Meeting the Challenges of Ultra-Large-Scale Distributed Real-time and Embedded Systems with Model-Driven Engineering, June 19, 2007, Trinity College, Dublin.
127. Strategic Technology Positioning, PrismTechnologies "Middleware Fest", June 14, 2007, Newcastle, UK.
128. "Hurdles for Wireless Communication Systems R&D and Some Ways to Overcome Them," OSD Workshop on Wireless Communication Systems, Rosslyn, VA, May 22nd, 2007.
129. "The World is Flat from a Computer Scientists Point of View," Vanderbilt University Commencement talk, May 10th, 2007.
130. Meeting the Challenges of Ultra-Large-Scale Distributed Real-time and Embedded Systems, invited keynote at the the 10th IEEE International Symposium on Object/Component/Service-oriented Real-time Distributed Computing, May 7-9, 2007, Santorini Island, Greece.
131. "Enhanced QoS for the GIG," AFRL JBI PI meeting, Georgetown, DC, April 24, 2007.
132. "Meeting the Challenges of Ultra-Large-Scale Distributed Real-time and Embedded Systems," Invited keynote at the 15th International Workshop on Parallel and Distributed Real-Time Systems (WDPRTS), March 26-27, 2007, Long Beach, California.
133. "The CORBA C++ Mapping: Beyond Repair?," OMG Meeting, San Diego, CA, March 27th, 2007.
134. "Meeting the Challenges of Ultra-Large-Scale Systems via Model-Driven Engineering," Distinguished Lecturer Series, Florida International University, Miami, Florida, Feb 2, 2007.
135. Model Driven Engineering and QoS-enabled Component Middleware for DRE Systems, Invited talk at the European Space Agency Operations Center, Darmstadt, Germany, Wednesday January 24, 2007.

136. "Software Wind Tunnel (SWiT) Concept of Operations and System Architecture", AFRL Software and Systems Test Track workshop, Arlington, VA, January 19, 2007.
137. "Latest Breakthroughs in SDR Software Development Using Model Driven Technologies," Rockwell Collins, Cedar Rapids, IA, December 14th, 2006.
138. "Educating the DoD Workforce in a Flat World," 2006 Raytheon Integrated Defense Systems' SW Engr. Directorate Off-Site Meeting, New Castle, New Hampshire, December 7, 2006.
139. "The Ultra Challenge: Software Systems Beyond Big," panelist at OOPSLA 2006, October, 2006, Portland, OR.
140. "Software Wind Tunnel (SWiT) Architecture," AFRL Software and Systems Test Track Workshop, Cherry Hill, NJ, October 2nd, 2006.
141. "The World is Flat and What You Can Do About it," Vanderbilt University, September 12th, 2006.
142. "The World is Flat and What You Can Do About it," Vanderbilt University, September 8th, 2006.
143. "Meeting the Challenges of Ultra-Large-Scale Systems via Model-Driven Engineering," Network-Centric Operations Industry Consortium, Reston, VA, August 2nd 2006.
144. Model Driven Architecture Roundtable, invited panelist at the Software Engineering Institute, Pittsburgh, PA, June 1st, 2006.
145. "Enhanced QoS for the GIG," AFRL JBI PI meeting, Tysons Corner, VA, April 11, 2006.
146. "Model Driven Engineering for Distributed Real-time and Embedded Systems," Distinguished Lecturer Series talk at Colorado State University, Ft. Collins, CO, April 10, 2006.
147. "Win-Win Partnership of Academia and Industry: Why Should We Care? Where Is Our Common Future?" invited panelist at the 12th IEEE Real-Time and Embedded Technology and Applications Symposium April 6, 2006, San Jose, California.
148. "Meeting the Challenges of Ultra-Large-Scale Real-time Systems," invited keynote at the IEEE Real-Time and Embedded Technology and Applications Symposium April 5, 2006, San Jose, California.
149. "Model-driven Development for Distributed Real-time and Embedded Systems," ACM Meeting at Middle Tennessee State University, March 7th, 2006.
150. "Real-time, Scalable, and Secure Information Management for the GIG," Scientific Advisory Board Meeting, Rome, NY, November 16th, 2005.
151. "Real-time, Scalable, and Secure Information Management for the GIG," Airforce Research Lab, Rome, NY, November 3rd, 2005.
152. "Model-driven Development for Distributed Real-time and Embedded Systems," Distinguished Speaker Talk at BBN Technologies, Cambridge, MA, October 27, 2005.
153. "Challenges and Research Areas for QoS-enabled Information Management in Tactical Systems of Systems," AFRL Minnowbrook Workshop, Adirondack Mountains, NY, October 21st, 2005.
154. "Model-driven Development for Distributed Real-time and Embedded Systems," Invited keynote at MODELS 2005, ACM/IEEE 8th International Conference on Model Driven Engineering Languages and Systems, Half Moon Resort, Montego Bay, Jamaica, October 5-7, 2005.
155. "The World is Flat and What You Can Do About it," CS WithIT Seminar, Vanderbilt University, September 22, 2005.
156. "Why Software Reuse has Failed and How to Make it Work for You," Motorola 2005, Symposium on Software, Systems, and Simulation, Schaumburg, IL, September 16th, 2005.
157. "Pattern-Oriented Software Architecture," 12th Pattern Language of Programming Conference, Allerton Park, Illinois, September 7-10, 2005.
158. "Model-Driven Development of Distributed Real-time and Embedded Systems," 12th Pattern Language of Programming Conference, Allerton Park, Illinois, September 7-10, 2005.
159. "Model-driven Development for Distributed Real-time and Embedded Systems," Siemens Corporate Research, Princeton, NJ, August 26th.
160. "Model-driven QoS Provisioning for Real-time CORBA and CCM DRE Systems," 6th OMG Real-time/Embedded CORBA workshop, Washington DC, July 11–14, 2005.

161. "A Proposed R&D Agenda for the Software Technology Laboratory," Lockheed Martin Advanced Technology Lab, Cherry Hill, NJ, June 28th, 2005.
162. "Model-Driven Development of Product-Line Architectures for DRE Systems," 11th Siemens Software Architecture Improvement Group (SAIG), Buffalo Grove, IL June 22, 2005.
163. "Business Drives for Platforms," panel at the 11th Siemens Software Architecture Improvement Group (SAIG), Buffalo Grove, IL June 22, 2005.
164. "Model Driven Development for Distributed Real-time and Embedded Systems," Lockheed Martin Advanced Technology Lab, Cherry Hill, NJ, June 15th, 2005.
165. "Approaches for Supporting Real-time QoS in JBI," JBI PI Meeting, Washington DC, May 24th, 2005.
166. "Overcoming Hurdles of Software Producibility," OSD, Software Producibility Workshop, Arlington, VA, May 18, 2005.
167. "Overview of Multi-Level Resource Management in ARMS," Fermilab, Chicago, IL, April 12th, 2005.
168. "Model Driven Middleware for Distributed Real-time and Embedded Systems," University of Southern Alabama, April 8, 2005.
169. "Model-Driven Development of Distributed Real-time and Embedded Systems," UAV Battlelab, Indian Springs, NV, February 10th, 2005.
170. "The Future of Software and Systems Engineering," IEEE Meeting, Vanderbilt University, February 8th, 2005.
171. Model Driven Development of Distributed Real-time and Embedded Systems, panel at the OOP conference, Munich, Germany, January 27, 2005.
172. "Product-line Architecture Technologies for Distributed Real-time and Embedded Systems, Lockheed Martin, Moorestown, NJ, November 11, 2004.
173. "Model Driven Development of Distributed Real-time and Embedded Systems," invited panelist in the "Generative Programming: Past, Present, and Future," at the 3rd ACM International Conference on Generative Programming and Component Engineering, Vancouver, CA, October 24th 2004.
174. "Developing Combat Systems with Component Middleware and Models," Lockheed Martin, Moorestown, NJ, October 22, 2004.
175. "Model Driven Development of Distributed Real-time and Embedded Systems," Lockheed Martin Advanced Technology Lab, Cherry Hill, NJ, October 21, 2004.
176. "Model Driven Development of Distributed Real-time and Embedded Systems," Lockheed Martin Missile and Fire Control, Dallas, TX, October 13, 2004.
177. "Design of ARMS MLRM Components: CCM Based Design for Dynamic Resource Management," DARPA ARMS Technical Interchange Meeting, Plymouth, RI, October 7, 2004.
178. "Model Driven Middleware for Component-based Distributed Systems," keynote for the The 8th International IEEE Enterprise Distributed Object Computing Conference, Monterey, California, September 22, 2004.
179. "Systems Science Challenge Area," TRUST NSF Science and Technology Review, UC Berkeley, September 12, 2004.
180. "Model Driven Development for Distributed Real-time and Embedded Systems," Lockheed Martin, Eagan, MN, August 31st, 2004.
181. "Model Driven Computing for Distributed Real-time and Embedded Systems," Telcordia, Piscataway, NJ, August 10th, 2004.
182. "Model Driven Computing for Distributed Real-time and Embedded Systems," Raytheon, Portsmouth, RI, August 9th, 2004.
183. "Distributed Object Computing with CORBA," Raytheon, Portsmouth, RI, August 9th, 2004.
184. "Model Driven Development of Distributed Real-time and Embedded Systems," Raytheon, Ft. Wayne, IN, July 27th, 2004.

185. "Model Driven Middleware for Distributed Real-time and Embedded Systems," panelist at the 5th OMG Real-time and Embedded Middleware Workshop, Reston, VA 2004.
186. "The Role of Open Standards,Open-Source Development, and Different Development Models and Processes on Industrializing Software," ARO Workshop on Software Reliability for FCS, Vanderbilt University, Nashville, Tennessee, May 18-19, 2004.
187. "Model Driven Middleware for Distributed Real-time and Embedded Systems," Keynote talk for the SIGS Software Engineering Today conference in Zurich, Switzerland, May 4-5, 2004.
188. "Model-Driven Development of Distributed Real-time and Embedded Systems," 10th Siemens Software Architecture Improvement Group (SAIG), Vienna, Austria, April 20-24, 2004.
189. "Adaptive and Reflective Middleware for Distributed, Real-time, and Embedded Systems," Purdue University, West Lafayette, Indiana, April 6, 2004.
190. "Model Driven Middleware for Distributed Real-time and Embedded Systems," *Technologies That Will Change the World* session at the Southeastern Software Engineering Conference, Huntsville, Alabama, March 30th, 2004.
191. "Advances in COTS Middleware for Distributed Real-time and Embedded Systems," Keynote for the International Conference on COTS-Based Software Systems (ICCBSS) 2004 in Redondo Beach, February 2-4, 2004.
192. Composable Middleware Components for High Confidence Network Embedded Systems, University of California, Berkeley, December 4th, 2003.
193. "Model Driven Middleware," TechConnect 2003, St. Louis, MO, October 1st, 2003.
194. "Advances in Model Driven Middleware for Distributed Real-time and Embedded Systems," the Model Integrated Computing PSIG meeting at the OMG Technical Meeting, September 10, 2003, Boston, MA.
195. Invited panelist for the "Research on DRE Systems" panel at the OMG Real-time Middleware Workshop, July 16, 2003, Arlington, VA.
196. "Advances in Model Driven Middleware for Distributed Real-time and Embedded Systems," the OMG Real-time Middleware Workshop, July 15, 2003, Arlington, VA.
197. Organizer and presenter for a panel on "Advances in Large-scale Distributed Real-time and Embedded Systems" at the 9th IEEE Real-time/Embedded Technology and Applications Symposium (RTAS), May 27-30, 2003, Washington, DC.
198. "Managing Project Risk for Combat Systems," The Southeastern Software Engineering Conference, Huntsville, Alabama, April 1st, 2003.
199. "Distributed Real-time and Embedded Systems at DARPA," OMG Workshop on Super Distributed Objects, Washington DC, Monday, November 18, 2002.
200. "Adaptive and Reflective Middleware for Distributed Real-time Systems," Workshop on High Performance, Fault Adaptive, Large Scale Real-time Systems, Vanderbilt University, November 14, 2002.
201. Invited panelist on "Objects and Real-time Systems" OOPSLA '02, Seattle, WA, November 8, 2002.
202. "An Overview of ACE+TAO," Boeing, Seattle, November 8th, 2002.
203. "Pattern-Oriented Software Architecture," Amazon, Seattle, WA, November 6th, 2002.
204. "Using Real-time CORBA Effectively: Patterns and Principles," CORBA Controls Workshop, Grenoble, France, October, 9th, 2002.
205. "Adaptive and Reflective Middleware for Distributed Real-time and Embedded Systems," EMSOFT 2002: Second Workshop on Embedded Software, Grenoble, France, October, 7–9th, 2002.
206. "Designing the Future of Embedded Systems at DARPA IXO," Keynote talk at the 6th Annual Workshop on High-Performance Embedded Computing (HPEC), September 25, Boston, MA.
207. "Open Distributed Computing Platforms," NSF/OSTP Workshop on Information Technology Research for Critical Infrastructure Protection, Lansdowne, VA, September 20th, 2002.
208. "Real-time Object-Oriented Middleware," Distributed Common Ground/Surface System Technical Review Group meeting, Mclean VA, September 19th, 2002.

209. "Research Advances in Middleware for Distributed, Real-time, and Embedded Systems," Computer Communications stream of the 17th IFIP World Computer Congress, Montreal, Canada, August 25-30, 2002.
210. "DARPA Thrusts in Embedded Computing," Mercury Computer Systems, Tyngsboro, MA, July 25th, 2002.
211. "Adaptive and Reflective Middleware for Distributed, Real-time, and Embedded Combat Systems," Boeing Space and Missile Systems, Anaheim, CA, July 9, 2002.
212. "Annual Report on Software Design and Productivity Coordinating Group," Interagency Working Group, ITR&D Spring Planning Meeting, NSF, Ballston, VA, May 10, 2002.
213. "Real-time CORBA Standardization: Past, Present, and Future," panelist in the "Standards Movements in Object-oriented Real-time Computing" panel at the ISORC 2002 Conference, Washington, DC, April 30, 2002.
214. "Towards Adaptive and Reflective Middleware for Distributed Real-time Embedded Systems," Moderator of the *Distributed, Real-time, and Embedded Middleware for Network-Centric Combat Systems* panel at the Software Technology Conference (STC) in Salt Lake City, Utah, April 29, 2002.
215. "Applying Architectural Patterns to Address Key Challenges of Distributed Software," Siemens Architecture Interworking Group, Chicago, IL, April 24, 2002.
216. "Towards Adaptive and Reflective Middleware for Distributed Real-time and Embedded Systems," Space and Missile Defense Command, Huntsville, AL, April 22, 2002.
217. "How to Maintain Superiority in the Face of the Commoditization of IT," tutorial at the UCI CEO Roundtable, Maui, Hawaii, April 12, 2002.
218. "Transformation or Transmogrification? Surviving the Commoditization of IT," panelist at the UCI CEO Roundtable, Maui, Hawaii, April 11, 2002.
219. "Patterns and Principles of Mission-critical Middleware," Henry Samueli School of Engineering Research Review, University of California, Irvine, March 14th, 2002.
220. "DARPA: an Agency Overview," CRA Academic Careers Workshop, Arlington, Virginia, February 10 - 12, 2002.
221. "Towards Adaptive and Reflective Middleware for Distributed, Real-time, and Embedded Systems," Electrical Engineering and Computer Science Department, Vanderbilt University, January 28th, 2002.
222. "Protecting Critical Cyber Infrastructure from Asymmetric Threats," panelist at the 7th IEEE Workshop on Object-oriented Real-time Dependable Systems, San Diego, CA, January 10, 2002.
223. "The Researcher's Dilemma: When Technology Success Causes Great Communities to Fail (at Mission-oriented R&D Agencies)," Software Design and Productivity Coordinating Group Workshop on New Visions for Software Design and Productivity: Research and Applications, Nashville, TN, December 13-14, 2001.
224. "Towards Adaptive and Reflective Middleware for Mission-Critical Systems," Computer Science Department, College of William and Mary, September 7th, 2001.
225. "Adaptive and Reflective Middleware Systems," Lockheed Martin, Moorestown, NJ, August 21st, 2001.
226. "Adaptive and Reflective Middleware Systems," United Technology Research Center, Hartford, Connecticut, June 28th, 2001.
227. "Adaptive and Reflective Middleware Systems," Raytheon Annual Processing Systems Technology Network (PSTN) Symposium, Lexington, MA, June 20th, 2001.
228. Invited presenter for the Vendors' Panel at the OMG 2nd Workshop on Real-time and Embedded Distributed Object Computing, June 4-7, 2001.
229. "Towards Pattern Languages and QoS-enabled Middleware for Distributed Real-time and Embedded Systems," DARPA ITO workshop on Embedded Software, Lake Tahoe, NV, October 8-10, 2001.

230. "TAO, CORBA, and the HLA/RTI", Keynote talk at the Fifth IEEE International Workshop on Distributed Simulation and Real Time Applications Cincinnati, Ohio, USA August 13-15, 2001.
231. "Patterns and Principles of Middleware for Distributed Real-time and Embedded Systems," Raytheon, Sudbury, March 29th, 2001.
232. "Adaptive and Reflective Middleware Systems," Distinguished Lecture at Florida Atlantic University, Boca Raton, FL, March 1st, 2001.
233. "Adaptive and Reflective Middleware for Mission-Critical Distributed and Embedded Systems," University of Alabama, Birmingham, AL, January 31st, 2001.
234. "Adaptive and Reflective Middleware for Mission-Critical Distributed and Embedded Systems," Telcordia, Morristown, NJ, November 20th, 2000.
235. "Adaptive and Reflective Middleware for Mission-Critical Distributed and Embedded Systems," George Mason University, Fairfax, VA, November 20th, 2000.
236. "Adaptive and Reflective Middleware for Mission-Critical Distributed and Embedded Systems," Lucent CORBA Forum, Naperville, IL, November 17th, 2000.
237. "Putting an ORB on a Diet," Session on *Performance and QoS of Embedded CORBA ORBs* at the OMG's Workshop on Embedded Object-Based Systems, January 17-19, 2001.
238. "Adaptive and Reflective Middleware Systems," Panelist in a session on "Highly Distributed Systems," at the IEEE Symposium on Applications and the Internet, San Diego, CA, January 10, 2001.
239. "Adaptive and Reflective Middleware Systems," Panelist at the NSF Networking PI meeting, Irvine California, November 1st, 2000.
240. "Surviving the Tornado: The Best Kept Secrets of R&D Success in the Internet Age," Keck Observatory, Hawaii, October 9th, 2000.
241. "Adaptive and Reflective Middleware Systems," BBN Technologies, Boston, MA, September 27th, 2000.
242. "Distributed Application Integration: Myth or Reality?" Keynote talk at 2nd International Symposium on Distributed Objects and Applications (DOA '00), OMG, Antwerp, Belgium, September 21st, 2000.
243. "Surviving the Tornado: The Best Kept Secrets of R&D Success in the Internet Age," Keynote talk at 2nd International Symposium on Distributed Objects and Applications (DOA '00), OMG, Antwerp, Belgium, September 21st, 2000.
244. "High Confidence Adaptive and Reflective Middleware: Fact or Fiction?" Keynote talk for the IFIP Fourth International Conference on Formal Methods for Open Object-Based Distributed Systems, (FMOODS 2000), Stanford University, Stanford, CA, September 7th, 2000.
245. "Adaptive and Reflective Middleware Systems," Lockheed Martin, Ft. Worth, TX, September 6th, 2000.
246. Pattern-oriented Software Architecture: Concurrent and Networked Objects, Raytheon, San Diego, August 25, 2000.
247. "Adaptive and Reflective Middleware Systems," Rockwell/Collins, Cedar Rapids, Iowa, August 22, 2000.
248. "Adaptive and Reflective Middleware Systems," Lockheed Martin, Eagan, MN, August 21, 2000.
249. "Adaptive and Reflective Middleware Systems," Honeywell Technology Center, Minneapolis, MN, August 18, 2000.
250. "Adaptive and Reflective Middleware Systems," Raytheon, Falls Church, VA, July 12, 2000.
251. "Applying Patterns to Develop High-performance and Real-time Object Request Brokers," Lockheed Martin, Eagan, Minnesota, May 19, 2000.
252. "Patterns and Principles of Real-time Object Request Brokers," Cisco, San Jose, April 12, 2000.
253. "Patterns and Principles of Real-time Object Request Brokers," BellSouth, Atlanta, Georgia, March 3, 2000.

254. "Patterns and Principles of Real-time Object Request Brokers," Distinguished Lecturer Series, Michigan State University, East Lansing, Michigan, October 21, 1999.
255. "Towards Minimum ORBs for Wireless Devices and Networks," OPENSIG '99 Workshop, Carnegie Mellon University, Pittsburgh, October, 14-15, 1999.
256. "Applying CORBA Fault Tolerant Mechanisms to Network Management," Lucent CORBA Forum, Naperville, IL, September 28th, 1999.
257. "CORBA for Real-time and Embedded Telecom Systems," Lucent CORBA Forum, Naperville, IL, September 28th, 1999.
258. "Patterns and Principles of Real-time Object Request Brokers," BEA, Munich, Germany, September 16th, 1999.
259. "Real-time CORBA – Fact or Fiction," Siemens CORBA Day, Munich, Germany, September 15th, 1999.
260. "Patterns and Principles of Real-time Object Request Brokers," Siemens MED, Erlangen, Germany, September 13th, 1999.
261. "Patterns and Principles of Real-time Object Request Brokers," RT DII COE TWG, Boeing, Seattle, WA August 25th, 1999.
262. "Patterns for Real-time Middleware," Microsoft, Redmond, WA, August 24th, 1999.
263. "Patterns and Principles of Real-time Object Request Brokers," Lockheed Martin, Eagan, Minnesota, June 22nd, 1999.
264. "Using the ACE Framework and Patterns to Develop OO Communication Software," Dreamworks SGK, Glendale, CA, May 5th, 1999.
265. "Why Telecom Reuse has Failed and how to Make it Work for You," Keynote talk at Nortel Design Forum, Ottawa, CA, April 22nd, 1999.
266. "QoS-enabled Middleware for Monitoring and Controlling High-Speed Networks and Endsystems," Lucent Bell Labs, Murray Hill, NJ, April 15th, 1999.
267. "Optimization Patterns for High-performance, Real-time Object Request Broker Middleware," University of California, Irvine, April, 2nd, 1999.
268. "Using Design Patterns, Frameworks, and CORBA to Develop Object-Oriented Communication Systems," Lucent, Columbus, OH, March 18-19 and 25-26, 1999.
269. "Using Design Patterns, Frameworks, and Object-Oriented Communication Systems," Lucent, Holmdel, NJ, March 1-4, 1999.
270. Chaired a panel on "Research Directions for Middleware," NSF PI meeting, Washington, DC, January 24th, 1999.
271. "Principles and Patterns of High-performance Real-time CORBA," University of Southern California, Los Angeles, CA, December 10th, 1998.
272. "Real-time CORBA for Telecom – Fact or Fiction?," Bellcore, Morristown, NJ, December 1st, 1998.
273. "Design Patterns for Real-time Object Request Brokers," Silicon Valley Patterns Group, San Francisco, November 15, 1998.
274. "Why Reuse has Failed and how to Make it Work for You," Keynote talk at Lucent Software Symposium, October 27th, Murray Hill, NJ, 1998.
275. "Real-time CORBA – Fact or Fiction," Lucent CORBA Forum, Holmdel, NJ, September 29, 1998.
276. "Applying Software Design Patterns and Framework to Telecommunication Applications," Nortel Advanced Software Computing and Technology, Monday, April 6, 1998, Ottawa, Canada.
277. "Patterns and Performance of Real-time Object Request Brokers," University of California, Santa Barbara, February 20, 1998.
278. "Principles and Patterns of High-performance, Real-time Object Request Brokers," University of Frankfurt, Germany, February 12th, 1998.
279. "Principles and Patterns of High-performance, Real-time Object Request Brokers," University of Illinois, Urbana-Champaign November 12th, 1997.

280. "Principles and Patterns of High-performance, Real-time Object Request Brokers," University of Missouri, Kansas City, October 31st, 1997.
281. "Principles and Patterns of High-performance, Real-time Object Request Brokers," IBM T.J. Watson Research, September 15, 1997.
282. "Principles and Patterns of High-performance, Real-time Object Request Brokers," University of California, Santa Barbara, August 21st, 1997.
283. "Principles and Patterns of High-performance, Real-time Object Request Brokers," Lucent Technologies, Naperville, IL August 19th, 1997.
284. "Mastering Software Complexity with Reusable Object-Oriented Frameworks, Components, and Design Patterns," 3rd NSA Software Reuse Symposium, August 20th, 1997.
285. "Principles and Patterns of High-performance, Real-time Object Request Brokers," University of Utah, Salt Lake City, Utah, August 11th, 1997.
286. "Using the ACE Framework and Design Patterns to Develop Object-Oriented Communication Software," CERN, Switzerland, July 18th, 1997.
287. "Principles and Patterns of High-performance, Real-time Object Request Brokers," CHOOSE symposium, Zurich, Switzerland, July 17th, 1997.
288. Invited keynote speaker for 2nd Component's User Conference, Munich Germany, July 1997.
289. "Principles and Patterns of High-performance, Real-time Object Request Brokers," Lucent Bell Laboratories, Murray Hill, New Jersey, July 9th, 1997.
290. "Using the ACE Framework and Design Patterns to Develop Object-Oriented Communication Software," Lockheed Martin Tactical Systems, Minneapolis, Minnesota, June 26th, 1997.
291. QoS for Distributed Object Computing Middleware – Fact or Fiction?, panel at the Fifth International Workshop on Quality of Service (IWQoS '97), May 22nd, 1997, Columbia University, NYC, USA.
292. "Design Patterns and Frameworks for Developing Object-oriented WWW Clients and Servers," Carleton University, April 11th, 1997.
293. "Principles and Patterns of High-performance, Real-time Object Request Brokers," University of Maryland, College Park, Maryland, April 2nd, 1997.
294. "A High-Performance End system Architecture for Real Time COBRA," SPARTAN Symposium sponsored by US Sprint, Lawrence Kansas, March 18th, 1997.
295. "Experience with CORBA for Communication Systems," Motorola, Chicago, January 24th, 1997.
296. "High-performance CORBA," Bay Area Object Interest Group, Stanford Linear Accelerator Center, California, December 5th, 1996.
297. "Gigabit CORBA – An Architecture for High-performance Distributed Object Computing," Numerical Aerodynamic Simulation group, NASA, Moffett Field, California, December 3rd, 1996.
298. "Towards High-performance, Real-time CORBA," Distinguished Lecturer at Kansas State University, Manhattan, Kansas, November 7th, 1996.
299. "Gigabit CORBA – An Architecture for High-performance Distributed Object Computing," University of California, Los Angeles, October 3rd, 1996.
300. "Design Patterns and Frameworks for Object-Oriented Communication Software," NSA Software Reuse Symposium, August 28th, 1996.
301. "CORBA – the Good, the Bad, and the Ugly," Lucent Bell-Labs, Naperville, IL, August 22nd, 1996.
302. "Components: the Good, the Bad, and the Ugly," keynote talk for the 1st Components Users Conference, SIEMENS, Munich, Germany, July 15th, 1996.
303. "Design Patterns for Object-Oriented Communication Software," IONA Technologies, Ltd, Dublin, Ireland, July 12th, 1996.
304. "OO Design Patterns and Frameworks for Communication Software," Siemens Corporate Research, Princeton, New Jersey, June 27, 1996.

305. "OO Design Patterns for Concurrent, Parallel, and Distributed Systems," IBM Centre for Advanced Studies, North York, Ontario, Canada, June 17, 1996.
306. "Distributed Object Computing with CORBA", Bell Laboratories, Murray Hill, New Jersey, June 11-12th, 1996.
307. "Design Patterns for Object-Oriented Communication Software," Carleton University, Ottawa, Canada, May 21st, 1996.
308. "Integrating LAN-WAN-Celestial Networks with Design Patterns," Featured technical session at the Object World East conference, Boston, MA, May 9th, 1996.
309. "Using Design Patterns to Develop Object-Oriented Communication Software Frameworks and Applications," McMaster's University, Hamilton, Canada, May 2nd, 1996.
310. "Towards Gigabit CORBA – A High-Performance Architecture for Distributed Object Computing," University of Nevada, Reno, April 25th, 1996.
311. "Domain Analysis: From Tar Pit Extraction to Object Mania?" Panelist at the 4th International Conference on Software Reuse, Orlando, Florida, April 25th, 1996. (other panelists include Spencer Peterson, SEI CMU, Mark Simos, Organon Motives Inc., Will Tracz, Loral, and Nathan Zalman, BNR Inc).
312. "Concurrent Object-Oriented Network Programming with C++," Kodak Imaging Technology Center, April 19th, 1996.
313. "Using OO Design Patterns and Frameworks to Develop Object-Oriented Communication Systems," INRS/NorTel Workshop on Telecommunication Software, Montreal, CA, March 14th, 1996.
314. "Concurrent Object-Oriented Network Programming with ACE and C++," for Siemens Medical Engineering, Erlangen Germany, February 15th, 1996.
315. "OO Componentware" Panelist at the *OOP '96 Conference*, SIGS, Munich, Germany, February 13st, 1996. (other panelists included Michael Stal (Siemens AG) and Frank Buschmann (Siemens AG).
316. "Using Design Patterns to Develop High-performance Object-Oriented Communication Software Frameworks," for the Department of Information Systems, Institute of Computer Science, Johannes Kepler University of Linz, Austria, February 12th, 1996.
317. "The Performance of Object-Oriented Components for High-speed Network Programming," for the Digital Libraries research group at Stanford University, Palo Alto California, February 2nd, 1996.
318. "Distributed Object Computing with CORBA, ACE, and C++," for South Western Bell Telephone advanced distributed systems group, St. Louis, MO., January 26th, 1996.
319. "OO Design Patterns for Large-Scale Object-Oriented Communication Software Systems," AG Communication Systems, Phoenix, Arizona, December $11 - 13^{th}$, 1995.
320. "Experience Using OO Design Patterns to Develop Large-Scale Object-Oriented Communication Software Systems," Bell Northern Research, 7th Annual Design Forum, Ottawa, Canada, December 6th, 1995.
321. "Using OO Design Patterns to Develop Large-Scale Distributed Systems," Object Technology International, Ottawa, Canada, November 22nd, 1995.
322. "Design Patterns for Concurrent, Parallel, and Distributed Systems," North Dallas Society for Object Technology, September 13th, 1995.
323. "Using Design Patterns for Iridium Communication Services," at Motorola Iridium, Chandler, AZ, June 30th, 1995.
324. "Object Technology and the World-Wide Information Infrastructure," Panelist at ECOOP '95, Aarhus, Denmark, August 9th, 1995.
325. "Measuring the Performance of CORBA over ATM Networks," HP Labs, Palo Alto, CA, June 28th, 1995.
326. "Measuring the Performance of Object-Oriented Components for High-speed Network Programming," The C++ and C SIG user group, New York, New York, June 5th, 1995.
327. "An Overview of Design Patterns for Object-Oriented Network Programming," St. Louis Chapter of the ACM, St. Louis, MO, March 13th 1995.

328. "Design Patterns for Concurrent Object-Oriented Network Programming," Distributed Systems group at Siemens Corporate Research Center, Munich, Germany, March 3rd, 1995.
329. "Patterns: 'Eureka,' 'Deja-Vu,' or 'Just Say No'?" Panelist at the *OOP '95 Conference*, SIGS, Munich, Germany January 31st, 1995. (other panelists included Richard Helm, (DMR), Frank Buschmann (Siemens AG), and Dave Thomas (OTI).
330. "Developing Distributed Applications with the ADAPTIVE Communication Environment," *The* 12th *Annual Sun Users Group Conference*, SUG, San Francisco, California, June 17th, 1994.
331. "Flexible Configuration of High-performance Distributed Communication Systems," presented at the ETH-Zentrum in the Swiss Federal Institute of Technology, Zurich, Switzerland, May 31st, 1994.
332. "Object Oriented Techniques for Developing Distributed Applications," *Computer Science Department Colloquia*, California State University Northridge, December 7th, 1993.
333. "Hosting the ADAPTIVE System in the *x*-Kernel and System V STREAMS," *The x-Kernel Workshop*, IEEE, Tucson, Arizona, November 10th, 1992.
334. "An Environment for Controlled Experimentation on the Performance Effects of Alternative Transport System Designs and Implementations," IBM T. J. Watson Research Center, Hawthorne, New York, September 10th, 1992.

Colloquia, Seminars, and Tutorials

1. "Scalable Reactive Programming with Java," O'Reilly Live Training, January 22nd, 2021.
2. "Programming with Java Lambdas and Streams," O'Reilly Live Training, January 13th, 2021.
3. "Design Patterns in Java," O'Reilly Live Training, November 12th and 13th, 2020.
4. "Design Patterns in Java," O'Reilly Live Training, September 17th and 18th, 2020.
5. "Programming with Java Lambdas and Streams," O'Reilly Live Training, September 14th, 2020.
6. "Core Java Synchronizers," O'Reilly Live Training, August 20th, 2020.
7. "Scalable Reactive Programming with Java," O'Reilly Live Training, August 19th, 2020.
8. "Programming with Java Lambdas and Streams," O'Reilly Live Training, June 1st, 2020.
9. "Design Patterns in Java," O'Reilly Live Training, May 27th and 28th, 2020.
10. "Core Java Synchronizers," O'Reilly Live Training, May 18th, 2020.
11. "Programming with Java Lambdas and Streams," O'Reilly Live Training, March 30th, 2020.
12. "Design Patterns in Java," O'Reilly Live Training, March 23rd and 24th, 2020.
13. "Scalable Concurrency with the Java Executor Framework," O'Reilly Live Training, February 24th, 2020.
14. "Core Java Synchronizers," O'Reilly Live Training, February 10th, 2020.
15. "Design Patterns in Java," O'Reilly Live Training, January 29th and 30th, 2020.
16. "Programming with Java 8 Lambdas and Streams," O'Reilly Live Training, January 22nd, 2020.
17. "Programming with Java 8 Lambdas and Streams," O'Reilly Live Training, January 22nd, 2020.
18. "Scalable Concurrency with the Java Executor Framework," O'Reilly Live Training, November 27th, 2019.
19. "Reactive Programming with Java 8 CompletableFutures," O'Reilly Live Training, November 18th, 2019.
20. "Programming with Java 8 Lambdas and Streams," O'Reilly Live Training, November 6th, 2019.
21. "Design Patterns in Java," O'Reilly Live Training, November 4th and 5th, 2019.
22. "Design Patterns in Java," O'Reilly Live Training, September 17th and 18th, 2019.
23. "Programming with Java 8 Lambdas and Streams," O'Reilly Live Training, September 3rd, 2019.
24. "Scalable Concurrency with the Java Executor Framework," O'Reilly Live Training, August 29th, 2019.

25. "Reactive Programming with Java 8 CompletableFutures," O'Reilly Live Training, August 15th, 2019.
26. "Design Patterns in Java," O'Reilly Live Training, July 29th and 30th, 2019.
27. "Reactive Programming with Java 8 CompletableFutures," O'Reilly Live Training, August 15th, 2019.
28. "Programming with Java 8 Lambdas and Streams," O'Reilly Live Training, July 2nd, 2019.
29. "Design Patterns in Java," O'Reilly Live Training, June 13th and 14th, 2019.
30. "Programming with Java 8 Lambdas and Streams," O'Reilly Live Training, May 16th, 2019.
31. "Reactive Programming with Java 8 CompletableFutures," O'Reilly Live Training, May 13th, 2019.
32. "Design Patterns in Java," O'Reilly Live Training, April 17th and 18th, 2019.
33. "Scalable Programming with Java 8 Parallel Streams," O'Reilly Live Training, March 27th, 2019.
34. "Scalable Concurrency with the Java Executor Framework," O'Reilly Live Training, March 12th, 2019.
35. "Programming with Java 8 Lambdas and Streams," O'Reilly Live Training, March 5th, 2019.
36. "Design Patterns in Java," O'Reilly Live Training, February 26th and 27th, 2019.
37. "Reactive Programming with Java 8 CompletableFutures," O'Reilly Live Training, February 19th, 2019.
38. "Scalable Concurrency with the Java Executor Framework," O'Reilly Live Training, February 5th, 2019.
39. "Programming with Java 8 Lambdas and Streams," O'Reilly Live Training, January 22nd, 2019.
40. "Design Patterns in Java," O'Reilly Live Training, January 7th and 8th, 2019.
41. "Scalable Concurrency with the Java Executor Framework," O'Reilly Live Training, December 11th, 2018.
42. "Programming with Java 8 Lambdas and Streams," O'Reilly Live Training, December 6th, 2018.
43. "Design Patterns in Java," O'Reilly Live Training, November 13th and 14th, 2018.
44. "Scalable Concurrency with the Java Executor Framework," O'Reilly Live Training, October 29th, 2018.
45. "Programming with Java 8 Lambdas and Streams," O'Reilly Live Training, October 16th, 2018.
46. "Reactive Programming with Java 8 CompletableFutures," O'Reilly Live Training, October 4th, 2018.
47. "Design Patterns in Java," O'Reilly Live Training, September 18th and 19th, 2018.
48. "Programming with Java 8 Lambdas and Streams," O'Reilly Live Training, September 4th, 2018.
49. "Reactive Programming with Java 8 CompletableFutures," O'Reilly Live Training, August 30th, 2018.
50. "Scalable Programming with Java 8 Parallel Streams," O'Reilly Live Training, August 20th, 2018.
51. "Programming with Java 8 Lambdas and Streams," O'Reilly Live Training, July 25th, 2018.
52. "Design Patterns in Java," O'Reilly Live Training, July 2nd and 3rd, 2018.
53. "Reactive Programming with Java 8 CompletableFutures," O'Reilly Live Training, June 26th, 2018.
54. "Scalable Programming with Java 8 Parallel Streams," O'Reilly Live Training, June 25th, 2018.
55. "Programming with Java 8 Lambdas and Streams," O'Reilly Live Training, June 8th, 2018.
56. "Design Patterns in Java," O'Reilly Live Training, May 24th and 25th, 2018.
57. "Reactive Programming with Java 8 CompletableFutures," O'Reilly Live Training, April 26th, 2018.
58. "Scalable Programming with Java 8 Parallel Streams," O'Reilly Live Training, April 17th, 2018.
59. "Programming with Java 8 Lambdas and Streams," O'Reilly Live Training, April 13th, 2018.
60. "Design Patterns in Java," O'Reilly Live Training, April 3rd, 2018.

61. "Reactive Programming with Java 8 CompletableFutures," O'Reilly Live Training, March 13th, 2018.
62. "Scalable Programming with Java 8 Parallel Streams: Part 2," O'Reilly Live Training, March 7th, 2018.
63. "Scalable Programming with Java 8 Parallel Streams: Part 1," O'Reilly Live Training, March 6th, 2018.
64. "Programming with Java 8 Lambdas and Streams," O'Reilly Live Training, March 1st, 2018.
65. "Reactive Programming with Java 8 CompletableFutures," O'Reilly Live Training, February 13th, 2018.
66. "Scalable Programming with Java 8 Parallel Streams," O'Reilly Live Training, February 6th, 2018.
67. "Programming with Java 8 Lambdas and Streams," O'Reilly Live Training, February 1st, 2018.
68. "Programming with Java 8 Lambdas and Streams," O'Reilly Live Training, January 12th, 2018.
69. "Scalable Programming with Java 8 Parallel Streams," O'Reilly Live Training, January 10th, 2018.
70. "Reactive Programming with Java 8 CompletableFutures," O'Reilly Live Training, January 9th, 2018.
71. "Reactive Programming with Java 8 Completable Futures," O'Reilly Live Training, October 23rd, 2017.
72. "Programming with Java 8 Lambdas and Streams," O'Reilly Live Training, October 19th, 2017.
73. "Scalable Programming with Java 8 Parallel Streams," O'Reilly Live Training, October 17th, 2017.
74. "Java 8 Concurrency," O'Reilly Live Training, September 7-8th, 2017.
75. "Java 8 Concurrency," O'Reilly Live Training, August 30-31st, 2017.
76. "Java 8 Concurrency," O'Reilly Live Training, June 28-29th, 2017.
77. "The C++ Standard Template Library," Qualcomm, San Diego, February 16-19, 2016.
78. "The C++ Standard Template Library," Qualcomm, San Diego, October 13-16, 2015.
79. "The C++ Standard Template Library," Qualcomm, San Diego, October 13-16, 2015.
80. "Pattern-Oriented Java Concurrency," InformIT Webinar, May 14th, 2015.
81. "Pattern-Oriented Concurrent Programming with Java," OOP Conference, Munich, Germany, January 30th, 2015.
82. "Concurrent Programming in Android," OOP Conference, Munich, Germany, January 29th, 2015.
83. "The C++ Standard Template Library," Qualcomm, San Diego, October 14-17, 2014.
84. "The C++ Standard Template Library," Qualcomm, San Diego, August 5-8, 2014.
85. "Pattern-Oriented Software Architecture for Concurrent and Networked Software," July 28-31, 2014.
86. "The C++ Standard Template Library," Qualcomm, San Diego, August 5-8, 2014.
87. "The C++ Standard Template Library," Qualcomm, India, March, 2014.
88. "The C++ Standard Template Library," Qualcomm, San Diego, CA, January 23-34, 2014.
89. "The C++ Standard Template Library," Qualcomm, San Diego, CA, October 16-17th, 2013.
90. "Patterns and Frameworks for Concurrent and Networked Software," 2013 International Summer School on Trends in Computing Tarragona, Spain, July 25-26, 2013.
91. "The C++ Standard Template Library," Qualcomm, San Diego, CA, January 23-24th, 2013.
92. "The C++ Standard Template Library," Qualcomm, San Diego, CA, October 4-5th, 2012.
93. "Embedded Systems Patterns for C Developers," Qualcomm, San Diego, CA, August 28th, September 11th, September 25th, October 9th, October 23rd, and November 6th, 2012.
94. "Embedded Systems Patterns for C Developers," Qualcomm, San Diego, CA, August 14-15th, 2012.
95. "The C++ Standard Template Library," Qualcomm, San Diego, CA, May 15-18th, 2012.

96. "The C++ Standard Template Library," Qualcomm, San Diego, CA, January 25-26th, 2012.
97. "Object-Oriented Software Patterns and Frameworks," Qualcomm, San Diego, CA, October 11-12th, 2011.
98. "The C++ Standard Template Library," Qualcomm, San Diego, CA, May 11-12th, 2011.
99. "The C++ Standard Template Library," Qualcomm, San Diego, CA, January 25-26, 2011.
100. "Pattern-Oriented Software Architecture: A Pattern Language for Concurrent and Networked Software," SPLASH 2010, October 17-21, 2010, Reno, Nevada.
101. "Pattern-Oriented Software Architectures - Patterns and Frameworks for Concurrent and Networked Software," ProObject, Hanover, MD, August 11th, 2010.
102. "Pattern-Oriented Software Architecture: Patterns for Concurrent and Networked Embedded Systems," Qualcomm, Bangalore, India, June 21-22, 2010.
103. "Pattern-Oriented Software Architecture: Patterns for Concurrent and Networked Embedded Systems," Qualcomm, Hyderabad, India, June 24-25, 2010.
104. "Pattern-Oriented Software Architecture: A Pattern Language for High Quality and Affordable Distributed Computing Systems," IEEE Webinar Series, June 10th, 2010.
105. "The C++ Standard Template Library," Qualcomm, San Diego, CA, May 12-13, 2010.
106. "The C++ Standard Template Library," Qualcomm, San Diego, CA, December 16-17, 2009.
107. "Pattern-Oriented Software Architecture: A Pattern Language for Distributed Computing," OOPSLA 2009, Orlando, FL, October, 2009.
108. "The C++ Standard Template Library," Qualcomm, San Diego, CA, September 15-16, 2009.
109. "Networked Embedded Systems Patterns for C Developers," Qualcomm, San Diego, CA, June 11-12, 2009.
110. "Pattern-Oriented Software Architecture: A Pattern Language for Distributed Computing," Software Architecture Technology Users' Network (SATURN) workshop May 5, 2009 in Pittsburgh, PA.
111. "The C++ Standard Template Library," Qualcomm, San Diego, CA, January 29-30, 2009.
112. "Pattern-Oriented Software Architecture: A Pattern Language for Distributed Computing," IEEE Webinar Series, January 8th, 2009.
113. "Pattern-Oriented Software Architecture: A Pattern Language for Distributed Computing," OOPSLA 2008, Nashville, TN, October 20, 2008.
114. "The Data Distribution Service for Real-time Systems," OOPSLA 2008, Nashville, TN, October 19, 2008.
115. "Object-Oriented Patterns for Concurrent and Networked Applications," Qualcomm, San Diego, CA, August 5-6th, 2008.
116. "The C++ Standard Template Library," Qualcomm, San Diego, NJ, July 29-30, 2008.
117. "Object-Oriented Patterns and Frameworks with C++," Qualcomm, San Diego, CA, June 12-13, 2008.
118. "The C++ Standard Template Library," Qualcomm, New Jersey, May 5-6, 2008.
119. "Pattern-Oriented Software Architecture: A Pattern Language for Distributed Computing," Software Architecture Technology Users' Network (SATURN) workshop April 28 - May 1, 2008 in Pittsburgh, PA.
120. Developing Distributed Computing Systems with Patterns and Middleware, UCLA Extension, February 19-21, 2008.
121. Pattern-Oriented Software Architecture: A Pattern Language for Distributed Computing, OOPSLA 2007, Montreal, CA, October 24, 2007.
122. Object-Oriented Design and Programming with Patterns, Frameworks, and Middleware, Qualcomm, New Jersey, September 27-28, 2007.
123. Object-Oriented Design and Programming with Patterns, Frameworks, and Middleware, Qualcomm, San Diego, CA, August 21-22, 2007.

124. Lightweight CORBA Component Model, 8th OMG Real-time/Embedded CORBA workshop, Washington DC, July 9–12, 2007.
125. Model-Driven Engineering for Distributed Real-time and Embedded Systems, 13th IEEE Real-Time and Embedded Technology and Applications Symposium (RTAS 2007), Bellevue, WA, United States April 3-6, 2007.
126. "Improving Product Reliability and ROI Through Effective Software Reuse," Qualcomm, San Diego, CA, March 27th, 2007.
127. "Developing Distributed Computing Systems with Patterns and Middleware," UCLA Extension, February 21-23, 2007.
128. "POSA: Patterns for Concurrent and Distributed Systems," OOP, Munich, Germany, January 22, 2007.
129. "Meeting the Challenges of Software-Intensive Embedded Systems," OOP, Munich, Germany, January 23, 2007.
130. "Object-Oriented Design and Programming with Patterns, Frameworks, and Middleware," Qualcomm, San Diego, CA, January 10-11, 2007.
131. "Model-Driven Development of Distributed Systems," OOPSLA 2006, Portland, OR, October 22-26, 2006.
132. "Pattern-Oriented Software Architecture: Patterns for Concurrent and Networked Objects," OOPSLA 2006, Portland, OR, October 22-26, 2006.
133. "Model-Driven Engineering of Distributed Systems," MODELS 2006, Genova, Italy, October 1, 2006.
134. "Distributed Real-time and Embedded Systems," Advanced Institute of Information Technology, Seoul, Korea, August 7-11 2006.
135. "Lightweight CORBA Component Model," 7th OMG Real-time/Embedded CORBA workshop, Washington DC, July 10–13, 2006.
136. "How to Use ACE Effectively," Trion World Network, Austin, TX, June 19-21, 2006.
137. "Improving Product Reliability and ROI Through Effective Software Reuse," Qualcomm, San Diego, CA, June 15, 2006.
138. "Object-Oriented Design and Programming with Patterns, Frameworks, and Middleware," Qualcomm, San Diego, CA, June 13-14, 2006.
139. "Object-Oriented Design and Programming with Patterns, Frameworks, and Middleware," Qualcomm, San Diego, CA, Feb 9-10, 2006.
140. "Using Design Patterns, Frameworks, and CORBA to Develop Object-Oriented Communication Systems, University of California, Los Angeles Extension, January 18-20st, 2006."
141. "Model Driven Development of Distributed Real-time and Embedded Systems," at the OOP conference, January 17, 2006, Munich, Germany.
142. "Pattern-Oriented Software Architecture," at the OOP conference, January 16, 2006, Munich, Germany.
143. "Model Driven Development: State of the Art," at the OOP conference, January 16, 2006, Munich, Germany.
144. "Concurrent C++ Network Programming with Patterns and Frameworks," C++ Connections: 20 Years of C++ conference, November 11, 2005, Mandalay Bay, Las Vegas, NV.
145. "Pattern-Oriented Software Architecture: Patterns for Concurrent and Distributed Systems," OOPSLA 2005, San Diego, October 17th, 2005.
146. "Using Design Patterns, Frameworks, and CORBA to Develop Object-Oriented Communication Systems," BAE Systems, Greenlawn, New York, August 25, September 2-3.
147. "Lightweight CORBA Component Model," 6th OMG Real-time/Embedded CORBA workshop, Washington DC, July 11–14, 2005.
148. "Model Driven Development for Distributed Real-time and Embedded Systems," OMG Information Days: MDA - Frankfurt, Germany, June 9th, 2005

149. "Model Driven Development for Distributed Real-time and Embedded Systems," OMG Information Days: MDA - Munich, Germany, June 7th, 2005.
150. "Model Driven Development for Distributed Real-time and Embedded Systems," OMG Information Days: MDA - Zurich, Switzerland, June 1st, 2005.
151. Using Design Patterns, Frameworks, and CORBA to Develop Object-Oriented Communication Systems," BAE Systems, Wayne, New Jersey, May 13, 16, 19, 23, 27, 2005.
152. "Using Design Patterns, Frameworks, and CORBA to Develop Object-Oriented Communication Systems," BAE Systems, Wayne, New Jersey, February 18th, February 22nd, March 1, 8, and 15 2005.
153. "Pattern-Oriented Software Architectures for Distributed Systems" the OOP conference, January 28, 2005, Munich, Germany.
154. "Research on Model Driven Development of Distributed Real-time and Embedded Systems," the OOP conference, January 26, 2005, Munich, Germany.
155. "Using Design Patterns, Frameworks, and CORBA to Develop Object-Oriented Communication Systems," University of California, Los Angeles Extension, January 19-21st, 2005.
156. Using Design Patterns, Frameworks, and CORBA to Develop Object-Oriented Communication Systems, BAE Systems, Wayne, New Jersey, October 29, November 1, 8, 15, 22, 2004.
157. "Pattern-Oriented Software Architectures for Distributed Systems," OOPSLA 2004, Vancouver, British Columbia, October 25th, 2004.
158. "Notes on the Forgotten Craft of Software Architecture", OOPSLA 2004, Vancouver, British Columbia, October 25th, 2004.
159. "Model Driven Architecture with QoS-enabled component middleware," MDE for Embedded Systems, Brest, France, September 10th 2004.
160. "Using Design Patterns, Frameworks, and CORBA to Develop Object-Oriented Communication Systems," Qualcomm, San Diego, CA, Jan 7-6, 2005.
161. "Object-Oriented Design and Programming with Patterns, Frameworks, and Middleware," Qualcomm, San Diego, CA, Jan 9-10, 2005.
162. "Using the Lightweight CORBA Component Model to Develop Distributed Real-time and Embedded Applications," OMG Workshop on Distributed Object Computing for Real-time and Embedded Systems, July 12th, 2004, Reston, VA.
163. "Using Design Patterns, Frameworks, and CORBA to Develop Object-Oriented Communication Systems," University of California, Los Angeles Extension, July 7-9th, 2004.
164. Using Design Patterns, Frameworks, and CORBA to Develop Object-Oriented Communication Systems, University of California, Los Angeles Extension, January 21st-23rd, 2004.
165. Patterns and Frameworks for Concurrent Distributed Systems, SIGS OOP Conference, Munich, Germany, January 19th, 2004.
166. Middleware for Distributed Real-time and Embedded Systems, SIGS OOP Conference, Munich, Germany, January 19th, 2004.
167. "Pattern-Oriented Software Architectures for Networked and Concurrent Applications," OOPSLA 2003, Anaheim, CA, October 27, 2003.
168. The JAOO 2003 conference, September 22-26, Aarhus, Denmark.
169. "Using Design Patterns, Frameworks, and CORBA to Develop Object-Oriented Communication Systems," University of California, Los Angeles Extension, July 9-11th, 2003.
170. "Patterns, Frameworks, and Middleware: Their Synergistic Relationship," Frontiers of Software Practice, International Conference on Software Engineering, Portland, Oregon, May 7, 2003.
171. "Pattern-Oriented Distributed Systems Architecture," International Conference on Software Engineering, Portland, Oregon, May 5, 2003.
172. "Using Design Patterns, Frameworks, and CORBA to Develop Object-Oriented Communication Systems," University of California, Los Angeles Extension, January 22nd-24th, 2003.

173. "Patterns and Application Experiences for Real-time Object Request Brokers," OOPSLA 2002, Seattle, Washington, November, 2002.
174. "Pattern-Oriented Software Architectures for Networked and Concurrent Applications," OOPSLA 2002, Seattle, Washington, November, 2002.
175. Using Design Patterns, Frameworks, and CORBA to Develop Object-Oriented Communication Systems, Raytheon, St. Petersburg, FL, September 3–5, 2003.
176. Using Design Patterns, Frameworks, and CORBA to Develop Object-Oriented Communication Systems, University of California, Los Angeles Extension, July 22nd-24th, 2002.
177. "Policies and Patterns for High-performance, Real-time Object Request Brokers," Mercury Computer Systems, Tysons Corner, VA, November Feb 7, 2002.
178. Using Design Patterns, Frameworks, and CORBA to Develop Object-Oriented Communication Systems, University of California, Los Angeles Extension, January 23rd-25th, 2002.
179. "Policies and Patterns for High-performance, Real-time Object Request Brokers," Raytheon, Rosslyn, VA, November 12th, 2001.
180. "Pattern-Oriented Software Architecture: Patterns for Concurrent and Networked Objects," OOPSLA 2001, October 15th, 2000, Minneapolis, Minnesota.
181. "Policies and Patterns for High-performance, Real-time Object Request Brokers," International Symposium on Distributed Object Applications (DOA), Rome, September 17-20, 2001.
182. "Policies and Patterns for QoS-enabled Middleware," The JAOO 2001 conference, September 10-14, Aarhus, Denmark.
183. "Using Design Patterns, Frameworks, and CORBA to Develop Object-Oriented Communication Systems," University of California, Los Angeles Extension, July 23rd-25th, 2001.
184. "Policies and Patterns for High-performance, Real-time Object Request Brokers," OMG Second Workshop on Real-time and Embedded Distributed Object Computing on June 4-7, 2001 in Herndon, VA, USA.
185. "Design Patterns for Understanding Middleware and Component Infrastructures," 6th USENIX Conference on Object-Oriented Technologies and Systems, January 29, 2001, San Antonio, TX.
186. "Principles and Patterns of High-performance, Real-time Object Request Brokers," OOP conference, Munich, Germany, January 23, 2001.
187. "Using Design Patterns, Frameworks, and CORBA to Develop Object-Oriented Communication Systems," University of California, Los Angeles Extension, January 3-5, 2001.
188. "Patterns for Concurrent and Distributed Objects," OOPSLA 2000, October 16th, 2000, Minneapolis, Minnesota.
189. "Using Design Patterns, Frameworks, and CORBA to Develop Object-Oriented Communication Systems," University of California, Berkeley Extension, May 24-26, 2000.
190. "Using Design Patterns, Frameworks, and CORBA to Develop Object-Oriented Communication Systems," Jet Propulsion Laboratory, Pasadena, CA, April, 2000.
191. "Using Design Patterns, Frameworks, and CORBA to Develop Object-Oriented Communication Systems," University of California, Los Angeles Extension, March 27-31, 2000.
192. "Optimizing Middleware to Support High-Performance Real-time Distributed and Embedded Systems," OOP conference, Munich, Germany, January 27, 2000.
193. "Effective Architectures for DOC," OOP conference, Munich, Germany, January 24, 2000.
194. "Using Design Patterns, Frameworks, and CORBA to Develop Object-Oriented Communication Systems," University of California, Berkeley Extension, December 13-15, 1999.
195. "Middleware Techniques and Optimizations for Real-time Embedded Systems," 12th International Symposium On System Synthesis, IEEE, San Jose, CA, USA November, 11, 1999
196. "Patterns and Principles of Real-time Object Request Brokers," OOPSLA 1999, ACM, Denver, Colorado, November 1-5, 1999.

197. "Using Design Patterns, Frameworks and CORBA to Reduce the Complexity of Developing Reusable Large-Scale Object-Oriented Concurrent Communication Components and Systems," Fifth IEEE International Conference on Engineering of Complex Computer Systems, Las Vegas, Nevada, October 18-21, 1999
198. "Distributed Technologies," Motorola, Schaumburg, IL, August 10-12, 1999.
199. "Patterns and Principles of Real-time Object Request Brokers," the 3rd Components Users Conference, SIEMENS, Munich, Germany, July 12th, 1999.
200. "Using Design Patterns, Frameworks, and CORBA to Develop Object-Oriented Communication Systems," Lucent, Naperville, IL, June 23-24 and June 30 - July 1st, 1999.
201. "Using Design Patterns, Frameworks, and CORBA to Develop Object-Oriented Communication Systems," Motorola Software Symposium, Ft. Lauderdale, Florida, June 21st, 1999.
202. "Using Design Patterns, Frameworks, and CORBA to Develop Object-Oriented Communication Systems," University of California Los Angeles Extension, June 2-4, 1999.
203. "Concurrent Object-Oriented Network Programming and Distributed Object Computing," University of California Berkeley Extension, May 19-21, 1999.
204. "Patterns and Principles of Real-time Object Request Brokers," 5th USENIX Conference on Object-Oriented Technologies and Systems, May 4, 1999, San Diego, CA.
205. "Real-time CORBA for Telecom – Fact or Fiction?" Nortel Design Forum, Ottawa, CA, April 22, 1999.
206. "Using Design Patterns, Frameworks, and CORBA to Develop Object-Oriented Communication Systems," Lucent, Columbus, OH, March 18-19 and 25-26, 1999.
207. "Using Design Patterns, Frameworks, and CORBA to Develop Object-Oriented Communication Systems," Lucent, Holmdel, NJ, March 1-4, 1999.
208. "Using Design Patterns, Frameworks, and CORBA to Develop Object-Oriented Communication Systems," Lucent/Octel, Milpitas, CA, December 14-16, 1998.
209. "Using Design Patterns, Frameworks, and CORBA to Develop Object-Oriented Communication Systems," University of California Los Angeles Extension, December 8-10, 1998.
210. "Using Design Patterns, Frameworks, and CORBA to Develop Object-Oriented Communication Systems," Motorola, Schaumburg, IL, December 2-4, 1998.
211. "Concurrent Object-Oriented Network Programming and Distributed Object Computing," University of California Berkeley Extension, November 16-18, 1998.
212. "Using Design Patterns and Frameworks to Develop Object-Oriented Communication Software," OOPSLA 1998, October 19th, 1998, Vancouver, British Columbia.
213. "High-Performance CORBA," Lucent CORBA Forum, Holmdel, NJ, September 29, 1998.
214. "Writing Efficient Multi-Thread CORBA Applications," the 3rd Components Users Conference, SIEMENS, Munich, Germany, July 10, 1998.
215. "Using Design Patterns and Frameworks to Develop Object-Oriented Communication Software," UCLA extension course, Milan, Italy, June 29 - July 1, 1998.
216. "Using Design Patterns, Frameworks, and CORBA to Develop Object-Oriented Communication Systems," Lucent, Naperville, IL, June 8-11, 1998.
217. "Patterns and Performance of Real-time Object Request Brokers," Fourth IEEE Real-Time Technology and Applications Symposium (RTAS), Denver, Colorado, June 5, 1998.
218. "Using Design Patterns, Frameworks, and CORBA to Develop Object-Oriented Communication Systems," University of California Los Angeles Extension, June 1-3, 1998.
219. "Patterns and Principles of Real-time Object Request Brokers," NSA, Ft. Meade, MD, March 22, 1998.
220. Using Design Patterns, Frameworks, and CORBA to Develop Object-Oriented Communication Systems, Crosskeys, Ottawa Canada, March 19-21, 1998.
221. "Concurrent Object-Oriented Network Programming and Distributed Object Computing," University of California Berkeley Extension, March 4-6, 1998.

222. "Building Distributed Communication Software with CORBA," the Motorola Systems Symposium, February, 1998, Austin, Texas, USA.
223. "Introduction to Distributed Objects with CORBA," SIGS OOP '98, February 9-13, 1998, Munich, Germany.
224. "Design Patterns for Developing and Using CORBA Object Request Brokers," SIGS OOP '98, February 9-13, 1998, Munich, Germany.
225. Using Design Patterns, Frameworks, and CORBA to Develop Object-Oriented Communication Systems, Lucent Technologies, Whippany, NJ, January 5-6, 1998.
226. "Using Design Patterns, Frameworks, and CORBA to Develop Object-Oriented Communication Systems," University of California Los Angeles Extension, December 10-12, 1997.
227. "Concurrent Object-Oriented Network Programming and Distributed Object Computing," University of California Berkeley Extension, December 10-12, 1997.
228. "Using Design Patterns and Frameworks to Develop Object-Oriented Communication Systems," Motorola Cellular Infrastructure Group, Arlington Heights, Illinois, December 1 - 3, 1997.
229. "Using Design Patterns and Frameworks to Develop Object-Oriented Communication Systems," TOOLS Pacific '97, Melbourne, Australia November 24 - 27, 1997.
230. "Using Design Patterns and Frameworks to Develop Object-Oriented Communication Systems" for the IEEE GLOBECOM '97 conference, Phoenix, AZ, November 4-8, 1997.
231. "High-performance Distributed Object Computing with CORBA," IEEE International Conference on Network Protocols, Atlanta, GA, October 28th, 1997.
232. "Using Design Patterns and Frameworks to Develop Object-Oriented Communication Systems," OOPSLA 1997, ACM, Atlanta, GA, October 6-7th, 1997.
233. "Using Design Patterns and Frameworks to Develop Object-oriented Communication Systems," 24th International Conference on Technology of Object-Oriented Languages and Systems (TOOLS Asia '97). Beijing, China, September 22, 1997.
234. "Principles and Patterns of Distributed Object Computing Systems," for the ACM Principles of Distributed Computing Conference (PODC), Santa Barbara, CA, August 21st, 1997.
235. "Distributed Object Computing with CORBA and ACE," Alta Software, Jacksonville, FL, June 4-5th, 1997.
236. "Distributed Object Computing with CORBA", Object Expo, NY, NY, June 2nd, 1997.
237. "Concurrent Object-Oriented Network Programming and Distributed Object Computing," University of California Berkeley Extension, May 28-30, 1997.
238. "Patterns and Principles of Real-time Object Request Brokers," National Security Agency, Ft. Meade, MD, May 13th, 1997.
239. "Building Distributed Communication Software with CORBA," the Motorola Systems Symposium, March, 1997, Chandler, AZ, USA.
240. "Evaluating Concurrency Models for CORBA Servers," the 2nd Components Users Conference, SIEMENS, Munich, Germany, July 14th, 1997.
241. "Design Patterns for Evolving System Software Components from UNIX to Windows NT," the 2st Components Users Conference, SIEMENS, Munich, Germany, July 14th, 1997.
242. "Techniques and Patterns for Distributed Object Computing with CORBA and C++," University of California Berkeley Extension, December 4-6, 1996.
243. "Design Patterns for Concurrent Object-Oriented Programming with ACE and C++," C++ World, Dallas, TX, November 11th, 1996.
244. "Implementing Concurrent CORBA Applications with Multi-Threaded Orbix and ACE," C++ World, Dallas, TX, November 12th, 1996.
245. "Why Reuse has Failed, and How You Can Make it Work for You," Berne Technology Forum 1996, Berne, Switzerland, October 18, 1996.
246. "Introduction to Distributed Object Programming with CORBA," the Local Computer Networks '96 conference, IEEE, Minneapolis, Minnesota, October 13, 1996.

247. "Object-Oriented Design Patterns for Concurrent, Parallel, and Distributed Systems," the OOPSLA 1996 conference, ACM, San Jose, California, October, 1996.
248. "OO Design Patterns Network Programming in C++," Object Expo Europe, London, England, September 23rd, 1996.
249. "Effective Multithreaded CORBA Programming," Object Expo Europe, London, England, September 24th, 1996.
250. "Workshop on Object Oriented Technologies," Mitsubishi, July 22nd to July 26th, 1996, Kobe, Japan.
251. "Evaluating Concurrency Models for CORBA Servers," the 1st Components Users Conference, SIEMENS, Munich, Germany, July 15th, 1996.
252. "Design Patterns for Evolving System Software Components from UNIX to Windows NT," the 1st Components Users Conference, SIEMENS, Munich, Germany, July 15th, 1996.
253. "OO Design Patterns for Concurrent, Parallel, and Distributed Systems," the 2nd *Conference on Object-Oriented Technology*, USENIX, Toronto, Canada, June 17, 1996.
254. "OO Design Patterns for Concurrent, Parallel, and Distributed Systems," the 3rd *Conference on Object-Oriented Technology*, USENIX, Portland, Oregon, June 16th, 1996.
255. "OO Design Patterns for Network Programming in C++," the *Object Expo '96 Conference*, SIGS, Sydney, Australia, June 3rd, 1996.
256. "Effective Multi-threaded CORBA Programming Programming," the *Object Expo '96 Conference*, SIGS, Sydney, Australia, June 5th, 1996.
257. "Concurrent Object-oriented Network Programming with C++," University Of California Berkeley Extension, Berkeley, California, May $22^{nd} - -24^{th}$, 1996.
258. "Experience Developing Reusable Software Using Object-Oriented Design Patterns and Frameworks," the 4th *International Conference on Software Reuse*, Orlando, Florida, USA April 23-26, 1996.
259. "Techniques for Object-Oriented Network Programming," the *OOP Conference*, SIGS, Munich, Germany, Feb 14th, 1996.
260. "Using Object-Oriented Design Patterns to Develop Large-Scale Distributed Systems," the *OOP Conference*, SIGS, Munich, Germany, Feb 13th, 1996.
261. "Concurrent Object-oriented Network Programming with C++," University Of California Berkeley Extension, Berkeley, California, November 30th-December 1st, 1995.
262. "Using Object-Oriented Design Patterns to Develop Large-Scale Distributed Systems," the 4th *C++ World Conference*, SIGS, Chicago, Illinois, October 31st, 1995.
263. "Techniques for Object-Oriented Network Programming," the 4th *C++ World Conference*, SIGS, Chicago, Illinois, October 31st, 1995.
264. "Experience using OO Design Patterns to Develop Large-scale Distributed Communication Systems," *OOPSLA 1995 Conference* in Austin, Texas, October 1995.
265. "Concurrent Object-oriented Network Programming with C++," the 9th *European Conference on Object-Oriented Programming (ECOOP)*, Aarhus, Denmark, August, 1995.
266. "Concurrent Object-Oriented Network Programming with C++," the 1st *Conference on Object-Oriented Technology*, USENIX, Monterey, California, June 23, 1995.
267. "Design Patterns for Concurrent and Distributed Systems," the *Object Expo '95 Conference*, SIGS, New York, NY, June 5th 1995.
268. "Object Oriented Network Programming," the *Object Expo '95 Conference*, SIGS, New York, NY, June 5th, 1995.
269. "Software Construction with Active Objects in C++," the *OOP '95 Conference*, SIGS, Munich, Germany January 31, 1995.
270. "Object-Oriented Concurrent Programming with C++," the *OOP '95 Conference*, SIGS, Munich, Germany January 31, 1995.

271. "Concurrent Object-Oriented Programming," the *Winter USENIX Conference*, USENIX, New Orleans, Louisiana, January, 1995.
272. "Object-Oriented Network Programming with C++," the 3rd *C++ World Conference*, SIGS, Austin, Texas, November 14, 1994.
273. "Object-Oriented Techniques for Dynamically Configuring Concurrent Distributed Applications," the 9th *OOPSLA 1994*, ACM, Portland, Oregon, October 23, 1994.
274. "Object-Oriented Network Programming," the 6th *C++ Conference*, USENIX, Cambridge, Massachusetts, April 11, 1994.
275. "Object-Oriented Techniques for Developing Extensible Network Servers," the 2nd *C++ World Conference*, SIGS, Dallas, Texas, October 19, 1993.

Professional Activities

Editorial Activities

1. Guest co-editor for a special issue of the Springer Journal Annals of Telecommunications on "Middleware for Internet distribution in the context of Cloud Computing and the Internet of Things," 2016, with Gordon Blair and Chantal Taconet.
2. Guest co-editor of the Proceedings of the IEEE special issue on Applications of Augmented Reality Environments, 2014.
3. Guest co-editor of the International Journal of Network Protocols and Algorithms (NPA) Special Issue on Data Dissemination for Large scale Complex Critical Infrastructures, 2010.
4. Wrote the foreword to the book *Patterns of Parallel Software Design* by Jorge Luis Ortega Arjona, Wiley, 2010.
5. Editorial board member of the Springer Journal of Internet Services and Applications (JISA).
6. Editorial board member of the Transactions on Pattern Languages of Programming (TPLoP) published by Springer-Verlag.
7. Wrote the foreword to the book *Practical Software Factories in .NET*, by Gunther Lenz and Christoph Wienands, Apress, 2006.
8. Guest editor of the IEEE Computer Special Issue on Model Driven Development, February 2006.
9. Guest co-editor of IEEE Network special issue on "Middleware Technologies for Future Communication Networks," February 2004 (co-editors with Gordon Blair and Andrew Campbell).
10. Editorial board member of the Springer Journal of Aspect-Oriented Software Development.
11. Wrote the foreword to the book *Fundamentals of Distributed Object Systems: The CORBA Perspective*, by Zahir Tari and Omran Bukhres, Wiley and Sons, 2001.
12. Wrote the foreword to the book *Design Patterns in Communication Software*, edited by Linda Rising, Cambridge University Press, 2000.
13. Guest editor of the Special Issue on Components and Patterns for *The Journal of Theory and Practice of Object Systems*, Wiley & Sons, to appear 2002.
14. Invited editorial on "Trends in Distributed Object Computing" for the special issue on Distributed Object-Oriented Systems appearing in the Parallel and Distributed Computing Practices journal, edited by Maria Cobb and Kevine Shaw, Vol. 3, No. 1, March 2000.
15. Co-editor of "Building Application Frameworks: Object-Oriented Foundations of Framework Design," John Wiley & Sons, 1999 (co-editors are Mohamed Fayad and Ralph Johnson), ISBN 0-471-24875-4.
16. Co-editor of "Implementing Application Frameworks: Object-Oriented Frameworks at Work," John Wiley & Sons, 1999 (co-editors are Mohamed Fayad and Ralph Johnson), ISBN 0-471-25201-8.
17. Guest editor of the Special Issue on OO Application Frameworks for the Communications of the ACM, (co-editor Mohamed Fayad), ACM, October, 1997.
18. Guest editor of the special issue on Distributed Object Computing for USENIX Computing Systems Journal, November/December, 1996.

19. Guest editor of a feature topic on Distributed Object Computing for IEEE Communications Magazine, February, 1997.
20. Wrote the foreward for Dr. Nayeem Islam's book on *Distributed Objects: Methodologies for Customizing Operating Systems* (IEEE Computer Society Press, 1996).
21. Guest editor of the Special Issue on Patterns and Pattern Languages for Communications of the ACM, (co-editors Ralph Johnson and Mohamed Fayad), ACM, October, 1996.
22. Co-editor of a book entitled "Pattern Languages of Program Design," Addison-Wesley, 1995 (co-editor is Jim Coplien, Bell Labs).
23. Editor of the Patterns++ section of the C++ Report Magazine, April 1997 - March 1998.
24. Editor-in-chief of the C++ Report Magazine, January 1996 - February 1997.
25. Editorial board member of the IEEE Computer Society - Computer Science & Engineering Practice Board.

Program Chairmenships and Conference Organization

1. Chair of the DoD Organic Software Infrastructure Workshop, Arlington VA, August 13th, 2018.
2. General Chair of the Software Product Line Conference, Nashville TN, July/August, 2015.
3. Program Chair of the Interoperable Open Architecture 2013 conference, September 10-11, 2013, Washington, DC.
4. Program Chair of the NSF Workshop on Computing Clouds for Cyber-Physical Systems, March 15th, 2013, Ballston, VA.
5. Program Chair of the Interoperable Open Architecture 2012 conference, October 29-31, 2012, London, UK.
6. Program co-chair for the 1st International Symposium on Secure Virtual Infrastructures (DOA-SVI'11), 17-19 Oct 2011, Crete, Greece.
7. Program co-chair for the COMmunication System softWAre and middleware (Comsware) conference, Helsinki, Finland, August 2010.
8. Doctoral symposium chair for OOPSLA 2009, Orlando Floria, October 25-29, 2009.
9. General co-chair for the 3rd ACM International Conference on Distributed Event-Based Systems (DEBS 2009), July 6-9, 2009 - Nashville, TN, USA.
10. Member of the ISORC 2009 advisory and publicity committee for ISORC 2009, March 17-20, 2009, Toyko, Japan.
11. Area Coordinator for the Integrating Systems of Systems using Services topic at the 6th International Conference on Service Oriented Computing, Sydney (Australia), December 1st - 5th, 2008.
12. Member of the Advisory and Publicity Committee for ISORC 2008, Orlando, Florida, May 5 -7, 2008.
13. Co-chair of the Middleware for Network Eccentric and Mobile Applications (MiNEMA.08) Workshop co-located with ACM EuroSys Conference, March 31 - April 1, 2008, Glasgow, Scotland.
14. General chair of the ACM/IEEE 10th International Conference on Model Driven Engineering Languages and Systems (MODELS 2007), Nashville TN, September 30-October 5, 2007.
15. Area co-coordinator for the Quality of Service research track at the The Fifth International Conference on Service-Oriented Computing, September 17-20, 2007, Vienna, Austria.
16. Program co-chair of the NSF workshop on New Research Directions in Composition and Systems Technology for High Confidence Cyber Physical Systems, July 9, 2007.
17. Program co-chair for the Science of Design Principal Investigators workshop, February 28 to March 2, 2007.
18. Program co-coordinator for SOA Runtime area of the 4th International Conference on Service Oriented Computing Chicago, USA, December 4-7, 2006.
19. Program co-chair of the NSF/NCO Workshop on High-Confidence Software Platforms for Cyber-Physical Systems (HCSP-CPS) Workshop systems, November 30th to December 1st, 2006, Alexandria, VA.

20. Panels chair for the MoDELS 2006 conference, Genova Italy, Oct. 2-6, 2006.
21. Program Co-Chair of the Generative Programming and Component Engineering (GPCE) Conference, Portland, OR, October 2006 (collocated with OOPSLA '06).
22. Program Chair of the NSF/NCO Workshop on New Research Directions in High Confidence Software Infrastructure for Distributed Real-time and Embedded (DRE) systems, July 10th, 2006, Fairfax VA.
23. Program Co-Chair of the NSF/NCO High Confidence Medical Device Software and Systems (HCMDSS) Workshop, May 2005, University of Pennsylvania, Philadelphia, Pennsylvania.
24. Track Vice Chair for Real-time Middleware and Software Engineering for the Real-time Systems Symposium, Lisbon, Portugal, December, 2004.
25. Program Co-chair for the NSF/NCO Planning Meeting for the High Confidence Medical Device Software and Systems (HCMDSS) Workshop, November 16-17, 2004, Arlington, VA.
26. Program chair for 19th Annual ACM SIGPLAN Conference on Object-Oriented Programming, Systems, Languages, and Applications (OOSPLA), October 24-28, 2004, Vancouver, British Columbia, Canada.
27. General co-chair of the IEEE Real-Time and Embedded Technology and Applications Symposium, May 25 – 28, 2004, Toronto, Canada.
28. Program chair of the CCM Workshop, December 10th, 2003, Nashville, TN.
29. General co-chair for the 5th International Symposium on Distributed Objects and Applications, November 3–7 2003, Catania, Sicily.
30. Program co-chair of the 3rd TAO Workshop, July 18, 2002, Arlington, VA.
31. Program co-chair for Middleware 2003, 4th IFIP/ACM/USENIX International Conference on Distributed Systems Platforms, June 16-20, 2003, Rio de Janeiro, Brazil.
32. Program co-chair for the 9th IEEE Real-time/Embedded Technology and Applications Symposium (RTAS), May 27-30, 2003, Washington, DC.
33. Area vice-chair and session chair for Middleware at the 23rd IEEE International Conference on Distributed Computing Systems (ICDCS), May 19-22nd, 2003, Providence, RI.
34. Program co-chair of the IEEE Workshop on LargeScale Real-Time and Embedded Systems, December 2, 2002, Austin, TX.
35. Program co-chair for the 4th International Symposium on Distributed Objects and Applications, October 28–November 1, 2002, Irvine, CA.
36. Co-organizer of the cross-agency Software Design and Productivity Coordinating Group Workshop on New Visions for Software Design and Productivity: Research and Applications, December 13-14, Nashville, TN.
37. Program co-chair for the 3rd International Symposium on Distributed Objects and Applications, September 18-20, 2001, Rome, Italy.
38. Co-organizer of the cross-agency Workshop on New Visions for Software Design and Productivity, April 18-19, 2000, Ballston, VA.
39. Area vice-chair and session chair for Middleware at the IEEE International Conference on Distributed Computing Systems, April 16-19, Phoenix, AZ, 2001.
40. Tutorial chair for the 6th USENIX Conference on Object-Oriented Technologies and Systems, January 27 - February 3, 2001, San Antonio, TX.
41. Co-chair of the OMG Workshop on Real-time and Embedded CORBA, in Reston, VA, July 24-27, 2000.
42. General chair of the IFIP/ACM International Conference Middleware 2000 in New York, April, 2000.
43. Tutorial chair for the 5th USENIX Conference on Object-Oriented Technologies and Systems, May 3-7, 1999, San Diego, CA.
44. Treasurer for the Fourth International Workshop on Object-oriented Real-time Dependable Systems (WORDS'99) January 27-29, 1999, Radisson Hotel, Santa Barbara, California, USA.

45. Tutorial chair for the 4th USENIX Conference on Object-Oriented Technologies and Systems, April 27-30, 1998, Santa Fe, New Mexico.
46. Co-chair of the mini-track on Engineering Client-Server Systems for the HICSS-31 conference, the Big Island of Hawaii - January 6-9, 1998.
47. Tutorial chair for the 3rd USENIX Conference on Object-Oriented Technologies and Systems, Portland, OR, June 1997.
48. Publicity chair for the 5th IEEE International Workshop on Object-Orientation in Operating Systems, IEEE TCOS and USENIX, Seattle, Washington, October 27-28, 1996.
49. Program chair for 3rd conference on Programming Languages of Programming, Allerton, IL, USA, September, 1996.
50. Program chair for the 2nd USENIX Conference on Object-Oriented Technologies, June 1996.

Professional Service and Advisory Positions

1. Member of the Fraunhofer Advisory Board for the University of Maryland, College Park.
2. Member of the steering committee for the Software Product-Line Conference series.
3. Member of the Future Airborne Capabilities Environment (FACE) Advisory Board.
4. Vice-Chair of the Cyber Situation Awareness study for the Air Force Scientific Advisory Board.
5. Member of the Joint Tactical Radio System (JTRS) Tiger Team in support of the Assistant Secretary of the Army, Acquisition, Logistics, and Technology.
6. Member of the Air Force Scientific Advisory Board.
7. Member of the advisory board for the NSF-sponsored Repository for Model-Driven Development (ReMoDD) project at Colorado State University.
8. Member of the National Academics Committee on Advancing Software-Intensive Systems Producibility, chaired by Bill Scherlis from Carnegie Mellon University (CMU).
9. Member of the Engineering and Methods Technical Advisory Group (TAG) for the Software Engineering Institute at Carnegie Mellon University (CMU) from 2006 to 2009.
10. Member of the Ultra-Large-Scale (ULS) Systems study commissioned by the US Army and conducted at the Software Engineering Institute at Carnegie Mellon University (CMU).
11. Member of the Joshua group, which is an advisory board for the Air Force Research Lab (AFRL) in Rome, NY.
12. Member of the steering committee for the Distributed Objects and Applications conference series.
13. Member of the steering committee for the ACM/USENIX/IFIP Middleware conference series.
14. Member of the steering committee for EMSOFT 2002: Second Workshop on Embedded Software, Grenoble, France, October, 7–9th, 2002.
15. Member of the steering committee for EMSOFT 2001: First Workshop on Embedded Software, Lake Tahoe, California, October, 8th–10th, 2001.
16. Member of the Board of Directors for the Embedded Systems Consortium for Hybrid and Embedded Research (ESCHER).
17. Member of the NASA/JPL Mars Science Laboratory Mission Concept Review Board.
18. Chair of the subcommittee on Embedded and Hybrid Systems program for the National Science Foundation's 2003 Committee of Visitors in the Computer and Communications Research (C-CR) Division.
19. Co-chair of the Software Design and Productivity (SDP) Coordinating Group of the Federal government's multi-agency Information Technology Research and Development (IT R&D) Program, the collaborative IT research effort of the major Federal science and technology agencies. The SDP Coordinating Group formulates the multi-agency research agenda in fundamental software design.
20. One of the three founding members of the Scientific Advisory Board for the *International Symposium of Distributed Objects and Applications* conference series.
21. Member of the advisory board for Entera, which provides Internet content delivery systems based on ACE.

22. Invited to participate in the OO Working Group of the "Strategic Directions in Computing Research" workshop sponsored by ACM at MIT in June 1996.

Technical Program Committees

1. "Web of Things, Ubiquitous and Mobile Computing" Track for the Web Conference 2021, Ljubljana, Slovenia, from April 19-23, 2021.
2. 7th International Workshop on Middleware and Applications for the Internet of Things (M4IoT), December 2020 in conjunction with the ACM/IFIP International Middleware Conference.
3. 14th ACM International Conference on Distributed and Event-based Systems, July 13 to July 17, 2020, in Montreal, Quebec, Canada.
4. IEEE Workshop on IoT Big Data and Blockchain, at the 2019 IEEE International Conference on Big Data (IEEE Big Data 2019), December 9-12, 2019, Los Angeles, CA, USA.
5. The Web Conference 2020: Web of Things, Ubiquitous, and Mobile Computing Track, April 20-24th, 2020, Taipei, Taiwan.
6. 6th Middleware for Context-Aware Applications in the IoT (M4IOT) workshop collocated with the ACM/IFIP/USENIX Middleware 2019 Conference, UC Davis, California, USA, December 9-13th 2019.
7. The Second International Workshop on Blockchain Dependability, in conjunction with SRDS2019, Lyon, France, October 1, 2019.
8. The 13th ACM International Conference on Distributed and Event-based Systems, 4th-28th June, 2019, Darmstadt, Germany.
9. The "Web of Things, Ubiquitous, and Mobile Computing" track of The Web Conference 2019, San Francisco, CA, USA, May 13–17, 2019.
10. 17th Workshop on Adaptive and Reflexive Middleware (ARM), collocated with ACM/IFIP/Usenix Middleware 2018, December 10-14th, 2018, Rennes, France.
11. 25th International Conference on Pattern Languages of Programs (PLoP 2018), October 23 – 26th, Portland, OR, USA.
12. First International Workshop on Blockchain Dependability (WBD2018), held in conjunction with the 14th European Dependable Computing Conference, 10-14 September 2018, Iasi, Romania.
13. Workshop on Designing Resilient Intelligent Systems for Testability and Reliability, April 30 – May 4, 2018 in Seattle, USA (co-located with ICSA 2018).
14. 15th IEEE International Conference on Autonomic Computing (ICAC 2018), Sept 3-7, 2018, Trento, Italy.
15. International Conference on Information Society and Smart Cities (ISC 2018), Oxford city, United Kingdom 06-07 June, 2018.
16. 16th Workshop on Adaptive and Reflective Middleware workshop collocated with the ACM/IFIP/USENIX Middleware 2017 Conference, Las Vegas, Nevada, Dec 11-15, 2017.
17. 4th Middleware for Context-Aware Applications in the IoT (M4IOT) workshop collocated with the ACM/IFIP/USENIX Middleware 2017 Conference, Las Vegas, Nevada, Dec 11-15, 2017.
18. 10th International Workshop on Dynamic Software Product Lines - Adaptive Systems through Runtime Variability (DSPL '17), Sept 25-29, 2017, Sevilla, Spain.
19. 11th ACM International Conference on Distributed and Event-Based Systems (DEBS 2017), June 19 - 23, 2017, Barcelona, Spain.
20. 3rd Middleware for Context-Aware Applications in the IoT (M4IOT) workshop collocated with the ACM/IFIP/USENIX Middleware 2016 Conference, December 12-16, 2016 - Trento, Italy.
21. 7th International Symposium On Leveraging Applications of Formal Methods, Verification and Validation, October 5th – 14th, 2016, Corfu, Greece.
22. 10th ACM International Conference on Distributed and Event-based Systems, June 20 to June 24, 2016 in Irvine, CA.
23. First International Workshop on Science of Smart City Operations and Platforms Engineering (SCOPE), April 11, 2016, Vienna, Austria (Co-located with CPS Week).

24. 9th Dynamic Software Product Lines (DSLP) 2015 (held as part of SASO 2015) at MIT on September 21, 2015.
25. 13th International Conference on Advances in Mobile Computing and Multimedia (MoMM2015), Brussels, Belgium from 10-12 December 2015.
26. 13th IEEE/IFIP International Conference on Embedded and Ubiquitous Computing (EUC 2015, track on Cyber Physical Systems, Porto Portugal, October 21-23, 2015.
27. 35th IEEE International Conference on Distributed Computing Systems (ICDCS), June29 - July 2, 2015 in Columbus, Ohio, USA.
28. Fourth International Conference on Emerging Applications of Information Technology (EAIT) at Indian Statistical Institute, Kolkata, India, December 19-21, 2014.
29. The 20th IEEE Real-Time and Embedded Technology and Applications Symposium (RTAS 2014), Berlin, Germany, April 2014.
30. International Conference on Model-Driven Engineering and Software Development (MODELSWARD 2014), Lisbon, Portugal, 7-9 January, 2014.
31. 14th ACM/IFIP/USENIX International Middleware Conference (Middleware 2013), December 9-13, Beijing, China.
32. 32nd International Symposium on Reliable Distributed Systems (SRDS 2013), September 30-October 3, 2013 at Braga, Portugal.
33. 17th International Software Product Line Conference SPLC, Tokyo, Japan, 26-30 August 2013.
34. First International Workshop on Engineering Mobile-Enabled Systems, in conjunction with ICSE 2013, May 18-26th, 2013, San Francisco, CA.
35. International Conference on Model-Driven Engineering and Software Development (MODELSWARD 2013), Barcelona, Spain, 19-21 February, 2013.
36. ACM/USENIX/IFIP International Middleware conference, Montreal, Quebec, Canada, December 3-7, 2012.
37. 11th Workshop on Adaptive and Reflective Middleware, in conjunction with Middleware 2012 in Montreal, Quebec, Canada, December 3-7, 2012.
38. International Workshop on Real-Time and Distributed Computing in Emerging Applications (REACTION) 2012, San Juan, Puerto Rico, December 4, 2012, in co-location with the 33rd IEEE Real-Time Systems Symposium.
39. Third International Conference on Emerging Applications of Information Technology (EAIT) November 29 - December 01, 2012, Kolkata, India.
40. IASTED International Conference on Parallel and Distributed Computing and Systems (PDCS), Las Vegas, USA, November 12 - 14, 2012.
41. 31st International Symposium on Reliable Distributed Systems (SRDS), 8th-11th October 2012. Irvine, California.
42. Sixth International Workshop on Dynamic Software Product Lines (DSPL), September 2 - 7, 2012, Salvador, Brazil.
43. 16th International Software Product Line Conference (SPLC 2012), Salvador, Brazil on 02-07 September 2012.
44. 5th International workshop UML and Formal Methods (UML&FM 2012), Paris, France, August 27-31, 2012.
45. UML&AADL 2012, July 18-20,2012, Ecole Normale Superieure, Paris, France.
46. 17th IEEE International Conference on Engineering of Complex Computer Systems (ICECCS 2012), July 18-20,2012, Ecole Normale Superieure, Paris, France.
47. COMPSAC 2012 - Trustworthy Software Systems for the Digital Society, July 16-20, 2012, Izmir, Turkey.
48. Foundations Track of the 8th European Conference on Modelling Foundations and Applications (ECMFA 2012), Copenhagen, Denmark, 2-6th of July, 2012.

49. 24th International Conference on Software Engineering and Knowledge Engineering, Redwood City, California, USA, July 1-3, 2012.
50. 12th IFIP International Conference on Distributed Applications and Interoperable Systems (DAIS'12), Stockholm, Sweden, 13-16 June 2012.
51. 15th IEEE International Symposium on Object and component-oriented Real-time distributed Computing (ISORC), April 11-13, 2012, Shenzhen, China.
52. 23rd IASTED International Conference on Parallel and Distributed Computing and Systems (PDCS 2011), Dallas, USA, December 14 to 16, 2011.
53. Fourth IEEE International Workshop on Real-Time Service-Oriented Architecture and Applications (RTSOAA 2011), December 12th–14th 2011, University of California, Irvine, CA.
54. ACM/IFIP/USENIX International Middleware Conference, Lisbon, Portugal, December 12th to 16th, 2011.
55. 9th International Conference on Advances in Mobile Computing and Multimedia (MoMM2011), Hue City, Vietnam, 05-07 December 2011.
56. Control Systems, Automation and Robotics track of the 3rd International Congress on Ultra Modern Telecommunications and Control Systems (ICUMT 2011), Hungary on October 5-7, 2011.
57. 15th IEEE International Enterprise Distributed Object Computing Conference (EDOC 2011), August 29th - September 2nd, 2011, Helsinki, Finland.
58. 15th International Software Product Line Conference (SPLC 2011), Research/Experience Track, Munich, Germany, August, 22-26, 2011.
59. 15th International Software Product Line Conference (SPLC 2011), Industry Track, Munich, Germany, August, 22-26, 2011.
60. 2nd Workshop on Formal Methods in Software Product Line Engineering - Munich (Germany), August 2011.
61. 23rd International Conference on Software Engineering and Knowledge Engineering (SEKE2011), Miami Beach, USA, July 7-9, 2011.
62. 2nd International Workshop on Analysis Tools and Methodologies for Embedded and Real-time Systems, July, 5th 2011, Porto, Portugal.
63. Fourth IEEE International workshop UML and Formal Methods, co-located with FM 2011, June 20th, 2011, Lero, Limerick, Ireland.
64. The Software Engineering and Data Engineering (SEDE 2011) conference, Las Vegas, Nevada, June 20-22, 2011.
65. 3rd International Workshop on Model-Driven Architecture and Modeling-Driven Software Development (MDA&MDSD 2011) in conjunction with the 6th International Conference on Evaluation of Novel Approaches to Software Engineering - ENASE 2011, Beijing Jiaotong University, 8-11, June 2011.
66. 11th International IFIP Conference on Distributed Applications and Interoperable Systems (DAIS 2011), Reykjavik, Iceland, June 6-9 2011.
67. Second Product LinE Approaches in Software Engineering (PLEASE) workshop, collocated with 33rd International Conference on Software Engineering, Waikiki, Honolulu, Hawaii, May 21-28, 2011.
68. 16th Annual IEEE International Conference on the Engineering of Complex Computer Systems (ICECCS), April 27th-29th, 2011 Las Vegas, NV, USA.
69. Sixth IEEE International workshop UML and AADL, in conjunction with ICECCS 2011, April 27th, 2011, Las Vegas, USA.
70. First International Workshop on Cyber-Physical Networking Systems (CPNS'2011), in conjunction with INFOCOM 2011, April 15, 2011, Shanghai, China.
71. 2nd Workshop on Model Based Engineering for Embedded System Design (M-BED 2011), colocated with the Design, Automation, and Test in Europe (DATE) conference, 14-18, March, 2011, Grenoble, France.

72. Second International Conference on Emerging Applications of Information Technology (EAIT 2011), February, 2011 at Kolkata, India.
73. Fifth International Workshop on "Variability Modeling of Software-intensive Systems" (VaMoS '11), January 27-29 2011 in Namur, Belgium.
74. 9th Workshop on Adaptive and Reflective Middleware (ARM 2010) November 27, 2010, Bangalore India, collocated with Middleware 2010.
75. The 22nd IASTED International Conference on Parallel and Distributed Computing and Systems (PDCS 2010), November 8-10, 2010, Marina Del Ray, California.
76. International Conference on Software Engineering, Management, and Application (ICSEMA 2010) Kathmandu, Nepal, October 29th and 30th, 2010.
77. The MobiCPS 2010 workshop, held in conjunction with the 7th International Conference on Ubiquitous Intelligence and Computing (UIC2010), October 26-29, 2010 Xian, China.
78. Fourteenth IEEE International Enterprise Computing Conference (EDOC 2010), 25-29 October 2010, Vitoria, ES, Brazil.
79. Advances in Business ICT (ABICT) 2010 Workshop Wisla, Poland, October 18-20, 2010.
80. 3rd Workshop on Model Based Architecting and Construction of Embedded Systems (ACES-MB), held in conjunction with MoDELS 2010, Oslo, Norway, October 3-8, 2010.
81. 4th Dynamic Software Product Line Workshop held in conjunction with the 14th International Software Product Line Conference 2010, Jeju Island, South Korea, September 13-17, 2010.
82. TOOLS Europe 2010, Malaga, Spain, June 28 to July 2, 2010.
83. 22nd International Conference on Software Engineering and Knowledge Engineering (SEKE'2010), to be held July 1-3, 2010, Redwood City, California.
84. 13th International Symposium on Component Based Software Engineering (CBSE 2010), June 23-25 2010 in Prague, Czech Republic.
85. Sixth European Conference on Modelling Foundations and Applications (ECMFA), University of Pierre & Marie Curie, Paris, France. June 15-18, 2010.
86. 10th IFIP WG 6.1 International Conference on Distributed Applications and Interoperable Systems (DAIS), Amsterdam, The Netherlands, June 7-9, 2010.
87. The 11th OMG Real-time/Embedded CORBA workshop, Washington DC, May 24-26, 2010.
88. Industrial track at the 32nd International Conference on Software Engineering (ICSE 2010), Cape Town (South Africa), May 2-8, 2010.
89. Thirteeth International Conference on Business Information Systems (BIS 2010), Berlin, Germany, May 3-5 2010.
90. 1st International Workshop on Product LinE Approaches in Software Engineering, May 2nd, 2010, Cape Town, South Africa, held in conjunction with the 32nd International Conference on Software Engineering (ICSE 2010).
91. Workshop on Effective Multicasting for Future Critical Networked Systems (EMFINES 2010), at the Eighth European Dependable Computing Conference (EDCC), Valencia, Spain, April 28-30, 2010.
92. 1st Workshop on Model-Based Engineering for Embedded Systems Design, co-located with DATE 2010, March 12, 2010 in Dresden, Germany.
93. IEEE International Conference on Engineering of Complex Computer Systems (ICECCS 2010), Oxford 22-26, March 2010.
94. Special session on "Advanced Peer-to-Peer Protocols and Applications" at the Ninth IASTED International Conference on Parallel and Distributed Computing and Networks (PDCN 2010) February 16-18, 2010 Innsbruck, Austria.
95. Fourth Variability Modelling of Software-intensive Systems (VaMoS '10) workshop, Linz, Austria - January 27-29, 2010.
96. 8th Workshop on Adaptive and Reflective Middleware (ARM'09), in collocation with the 10th ACM/IFIP/USENIX Middleware Conference, in Urbana Champaign, Illinois, November 30th, 2009.

97. Workshop committee for OOPSLA 2009, Orlando Floria, October 25-29, 2009.
98. The ARTIST 2nd International Workshop on Model Based Architecting and Construction of Embedded Systems (ACESMB 2009), in conjunction with the 12th ACM/IEEE International Conference on Model Driven Engineering Languages and Systems (MODELS 2009), October 6th, 2009, Denver, Colorado.
99. The Thirteenth IEEE International EDOC Conference (EDOC 2009), 31 August - 4 September 2009, Auckland, New Zealand.
100. The 10th OMG Real-time/Embedded CORBA workshop, Washington DC, July 13–15, 2009.
101. The Software Engineering and Knowledge Engineering (SEKE'2009) conference, July 1-3, 2009, Boston, MA.
102. 12th International Symposium on Component-Based Software Engineering (CBSE 2009), East Stroudsburg University, Pennsylvania, USA, June 22-25, 2009.
103. The Second International Workshop on Cyber-Physical Systems (WCPS2009), held in conjunction with IEEE ICDCS 2009 in Montreal, Canada, June 22, 2009.
104. The Fifth European Conference on Model Driven Architecture Foundations and Applications (ECMDA), Gdansk, Poland, summer of 2009.
105. The 9th IFIP International Conference on Distributed Applications and Interoperable Systems (DAIS 2009) conference, Lisbon, Portugal, June 9-11, 2009.
106. The Fourth International Conference on COMmunication System softWAre and middlewaRE (COMSWARE), 15th - 19th June 2009, Trinity College Dublin, Ireland.
107. The UML&AADL Workshop, held in conjunction with ICECCS 2009 The fourteenth IEEE International Conference on Engineering of Complex Computer Systems June 02, 2009, Potsdam, Germany.
108. The 15th Real-time and Embedded Applications Symposium (RTAS) 2009, Track B, Real-time and Embedded Applications, Benchmarks and Tools, San Francisco, CA, United States, April 13 - 16, 2009.
109. Member of the ISORC 2009 advisory and publicity committee for ISORC 2009, March 17-20, 2009, Toyko, Japan.
110. the 13th International Software Product Line Conference (SPLC), August 24-28, 2009, San Francisco, CA.
111. the European Conference on Model Driven Architecture - Foundations and Applications 2009, University of Twente, Netherlands, June 2009.
112. The third workshop on "Variability Modelling of Software-intensive systems" (VaMoS'09), January 28-30 2009 in Sevilla, Spain.
113. the 1st Workshop on Software Reuse Efforts, November 27-29, 2008 Brazil.
114. the 7th Workshop on Adaptive and Reflective Middleware (ARM'08) in collocation with the 9th ACM/IFIP/USENIX Middleware Conference, Leuven, Belgium, December 1st 2008.
115. the Middleware 2008 9th International Middleware Conference, December 1-6, 2008, Leuven, Belgium.
116. the 11th Component-Based Software Engineering conference, Karlsruhe, Germany, October 14-17, 2008.
117. the ARTIST International Workshop on Model Based Architecting and Construction of Embedded Systems (ACESMB 2008), in conjunction with the 11th ACM/IEEE International Conference on Model Driven Engineering Languages and Systems (MODELS 2008), Toulouse, September 29th, 2008.
118. the 6th Java Technology for Real-Time and Embedded Systems (JTRES) conference, Santa Clara, California, USA, 24-26 September, 2008.
119. the 12th IEEE International Enterprise Distributed Computing Conference (EDOC) (EDOC 2008), 15-19 September 2008, Munich, Germany.
120. the First Workshop on Analyses of Software Product Lines (ASPL'08), September 12, 2008 in Limerick, Ireland in conjunction with SPLC'08.

121. the 9th OMG Real-time/Embedded CORBA workshop, Washington DC, July 14–17, 2008
122. the 3rd International Conference on Software and Data Technologies, July 5-8, 2008, Porto, Portugal.
123. the 20th International Conference on Software Engineering and Knowledge Engineering (SEKE'08), Redwood City, California, USA, July 1-3, 2008.
124. the TOOLS EUROPE 2008 conference, June 30 to July 4, 2008 at ETH Zurich.
125. National Conference on Research & Development in Hardware & Systems (CSI-RDHS 2008), Computer Society of India Kolkata Chapter & CSI Division I (Hardware & Systems), June 20-21, 2008, Kolkata, India.
126. the First International Workshop on Cyber-Physical Systems, Beijing, China, June 17 - 20, 2008.
127. the ECMDA 2008 (Fourth European Conference on Model Driven Architecture Foundations and Applications) in Berlin, June 09 - 12, 2008.
128. the Distributed Applications and Interoperable Systems (DAIS), Oslo, Norway, June 4, 2008.
129. the 2nd International Workshop on Ultra-Large-Scale Software-Intensive Systems (ULSSIS 2008), May 10-11, 2008 Leipzig, Germany.
130. the Automotive Systems Track at the 30th International Conference on Software Engineering (ICSE), Leipzig, Germany, 10-18 May 2008.
131. the Real-Time and embedded Applications / Benchmarks track at the 14th IEEE Real-Time and Embedded Technology and Applications Symposium (RTAS 2008), St. Louis, MO, April 22-24, 2008.
132. the 3rd UML and AADL Workshop held in conjunction with the 13th IEEE International Conference on Engineering of Complex Computer Systems, Belfast, Northern Ireland, 31 March - 4 April 2008.
133. the ACM Programming for Separation of Concern track at SAC 2008, Fortaleza, Brazil, March 16 - 20, 2008.
134. the 6th edition of the International Workshop on Adaptive and Reflective Middleware, held in conjunction with Middleware 2007 in Newport Beach, California.
135. the IEEE/ACM/USENIX Middleware conference, November 2007.
136. the IASTED International Conference on Parallel and Distributed Computing and Systems, PDCS 2007, Cambridge, MA, USA from Nov 19-21, 2007.
137. the 9th International Symposium on Distributed Objects, Middleware, and Applications (DOA), Iberian peninsula and islands, Oct 28 - Nov 2, 2007.
138. Member of the Doctoral Symposium committee at OOPSLA 2007, Portland, OR October 21-25, 2007.
139. the International Symposium on Ambient Intelligence and Computing, October 2007, Korea.
140. the IEEE conference on Enterprise Distributed Object Computing (EDOC), Annapolis, MD, October 15-19, 2007.
141. the 5th Java Technology for Real-Time and Embedded Systems (JTRES), Vienna, Austria, 26-28 September, 2007.
142. the Workshop on Trade-Off analysis of Software Quality Attributes (TOSQA), collocated with the sixth joint meeting of the European Software Engineering Conference and the ACM SIGSOFT Symposium on the Foundations of Software Engineering, Dubrovnik, Croatia, September 3-7, 2007.
143. the 2nd International Conference on Software and Data Technologies, July 22-25th 2007, Barcelona, Spain.
144. the Fourth IEEE International Conference on Web Services, Salt Lake City, UT, July 9-13, 2007.
145. the 10th International Component-Based Software Engineering (CBSE) Symposium, Boston, MA, July 9-11 2007.
146. the 8th OMG Real-time/Embedded CORBA workshop, Washington DC, July 9–12, 2007.
147. the International Conference TOOLS EUROPE 2007, Zurich, Switzerland on June, 24-28 2007.

148. the track on "Real-Time and Embedded Applications and Benchmarks" for the 13th IEEE Real-Time and Embedded Technology and Applications Symposium, Bellevue, WA, April 3 - April 6, 2007.
149. the Workshop on the Foundations of Interactive Computation (FInCo 2007), Braga, Portugal, March 24 - April 1, 2007.
150. the 15th International Workshop on Parallel and Distributed Real-Time Systems (WPDRTS), Long Beach, California, 26-27 March, 2007.
151. the ACM Symposium on Applied Computing, Programming for Separation of Concerns track, Seoul, Korea, March 11 - 15, 2007.
152. the Workshop on Pervasive Computing Environments and Services (PCES 07), Naples, Italy, Feb 7-9, 2007.
153. the Minitrack on Components for Embedded and Real-time Systems at the 40th Hawaiian International Conference on System Sciences, January 3-6, 2007 at Waikoloa, Big Island, Hawaii.
154. the 13th Asia Pacific Software Engineering Conference (APSEC06), Bangalore, India, Dec 6-8, 2006.
155. the Real-time Middleware and Software Engineering track of the The 27th IEEE Real-Time Systems Symposium, December 5-8, 2006 Rio de Janeiro, Brazil.
156. the 2nd International Conference on Trends in Enterprise Application Architecture, November 29th to December 1st, 2006, Berlin, Germany.
157. the workshop on MOdel Driven Development for Middleware (MODDM), November 27, 2006, Melbourne, Australia.
158. the International Symposium on Distributed Objects and Applications (DOA), Montpellier, France, Oct 29 - Nov 3, 2006.
159. the "Library-Centric Software Design" (LCSD'06) workshop at the OOPSLA'06 conference in Portland, Oregon, October 22-26, 2006.
160. Judge for the Student Research Competition at OOPSLA 2006, Portland, OR, October 23-24, 2006.
161. the NSF Workshop On Cyber-Physical Systems, October 16 - 17, 2006, Austin, Texas.
162. the Models at Run-Time MaRT-06 workshop held at the MoDELS 2006 conference, Genova Italy, Oct. 2-6, 2006.
163. the MoDELS 2006 conference, Genova Italy, Oct. 2-6, 2006.
164. the 7th OMG Real-time/Embedded CORBA workshop, Washington DC, July 11–14, 2006.
165. the European Conference on Object-Oriented Programming, Nantes, France, July 3-7, 2006.
166. the 9th International Symposium on Component-Based Software Engineering (CBSE 2006), Malardalen University, Sweden, June 29th-1st July 2006.
167. the 28th International Conference on Software Engineering (ICSE 28), May 24-26, 2006, Shanghai, China.
168. the 14th International Workshop on Parallel and Distributed Real-Time Systems, April 25-26, 2006, Island of Rhodes, Greece.
169. the 9th IEEE International Symposium on Object-oriented Real-time Distributed Computing, April 24-26, 2006, Gyeongju, Korea.
170. the Automotive Software Workshop San Diego (ASWSD 2006), University of California, San Diego, March 15-17, 2006.
171. the C++ Connections: 20 Years of C++ conference, Nov 7-11, 2005, Mandalay Bay, Las Vegas, NV.
172. the Conference on Distributed Objects and Applications (DOA 2005), Oct 31 - Nov 4, 2005, Agia Napa, Cyprus.
173. the 20th Annual ACM SIGPLAN Conference on Object-Oriented Programming, Systems, Languages, and Applications (OOSPLA), October 16-20, 2005, San Diego, CA, USA.

174. the 6th International Conference on Middleware (Middleware'2005), October, 2005, Grenoble, France.
175. the 2005 Monterey Workshop on Networked Systems, Laguna Beach, California, September 22-24, 2005.
176. The 12th Pattern Language of Programs (PLoP 2005), September 7-10, 2005, Allerton Park, Monticello, Illinois, USA.
177. the 14th IEEE International Symposium on High-Performance Distributed Computing (HPDC-14), Research Triangle Park, North Carolina, July 27, 2005.
178. the 5th International Workshop on Software and Performance (WOSP 2005), Palma de Mallorca, Spain, July 11-15, 2005.
179. the 6th OMG Real-time/Embedded CORBA workshop, Washington DC, July 11–14, 2005.
180. the 5th IFIP WG 6.1 International Conference on Distributed Applications and Interoperable Systems (DAIS 2005), June 15-17, 2005, Athens, Greece.
181. the International Conference on Autonomic Computing (ICAC 2005), Seattle, WA, June 2005.
182. the International Symposium on Component-Based Software Engineering (CBSE), co-located with the International Conference on Software Engineering (ICSE), May 14-15, 2005, St. Louis, MO.
183. the Foundations of Interactive Computation (FINCO'05) Workshop, Saturday, 9 April 2005, in Edinburgh, Scotland.
184. the Embedded Applications track of the IEEE Real-Time and Embedded Technology and Applications Symposium (RTAS) 2005, San Francisco, California, March 2005.
185. the "Programming for Separation of Concerns" track at Symposium on Applied Computing (SAC 2005), Santa Fe, New Mexico, March 2005.
186. the 12th International Symposium on the Foundations of Software Engineering, November 6th, 2004, Newport Beach, California.
187. the Conference on Distributed Objects and Applications (DOA 2004), October 25-29, 2004 in Cyprus, Greece.
188. the 2nd International Workshop on Java Technologies for Real-Time and Embedded Systems (JTRES), October 25-29, 2004, Larnaca, Cyprus.
189. the 3rd Workshop on Reflective and Adaptive Middleware (RM2004), October 19, 2004, Toronto, Ontario, Canada.
190. the Middleware 2004 5th IFIP/ACM/USENIX International Conference on Distributed Systems Platforms, October 18-22, 2004, Toronto, Canada.
191. the 4th TAO+CIAO Workshop, Arlington, VA, July 16, 2004.
192. the DARPA Workshop on Java in Real-Time and Embedded Defense Applications, Arlington, VA, July 13, 2004.
193. the OMG Real-time/Embedded CORBA workshop, Crystal City, VA, July 12–15, 2004.
194. the ECOOP 2004 conference, June 14-18, 2004, Oslo, Norway.
195. the Middleware track of the 24th IEEE International Conference on Distributed Computing Systems (ICDCS), May 23-26, 2004, Tokyo, Japan.
196. the 2nd International Workshop on Remote Analysis and Measurement of Software Systems (RAMSS), Edinburgh, Scotland, UK, May 24, 2004.
197. Aspect-Oriented Software Development conference, Lancaster, England, March 22-26, 2004.
198. the SPIE/ACM Conference on Multimedia Computing and Networking, January 21-22, 2004 Santa Clara, California.
199. the Real-time Systems Symposium (RTSS), Cancun, Mexico, December 3-5, 2003.
200. the 4th IFIP International Conference on Distributed Applications and Interoperable Systems (DAIS), Paris - France November 17-21, 2003.
201. the International Workshop on Java Technologies for Real-Time and Embedded Systems (JTRES), November 3-7, 2003, Catania, Sicily, Italy.

202. the Domain Driven Development track at the OOPSLA 2003 18th Annual ACM SIGPLAN Conference on Object-Oriented Programming, Systems, Languages, and Applications, October 26-30, 2003, Anaheim, California, USA.
203. the OOPSLA 2003 18th Annual ACM SIGPLAN Conference on Object-Oriented Programming, Systems, Languages, and Applications, October 26-30, 2003, Anaheim, California, USA.
204. External reviewer for the 2nd Generative Programming and Component Engineering (GPCE '03) conference, Erfurt, Germany, September 22-25, 2003.
205. the OMG Real-time/Embedded CORBA workshop, Crystal City, VA, July 14–17, 2003.
206. the The 2nd Workshop on Reflective and Adaptive Middleware, Rio de Janeiro, Brazil, June 17, 2003.
207. the ACM SIGPLAN 2003 Conference on Programming Language Design and Implementation (PLDI), San Diego, California, June 9 - 11, 2003.
208. the 1st International Workshop on Remote Analysis and Measurement of Software Systems (RAMSS), Portland, Oregon, May 9, 2003.
209. External reviewer for the 17th International Parallel and Distributed Processing Symposium, April 22–26, 2003, Nice, France.
210. the ACM International Conference on Aspect-Oriented Software Development, March 17 - 21, 2003, Boston, MA.
211. the SPIE/ACM Conference on Multimedia Computing and Networking, Santa Clara, California, January 29–31, 2003.
212. the International Workshop on Product Line Engineering The Early Steps: Planning, Modeling, and Managing (PLEES '02), Seattle, WA, November 5, 2002.
213. the 8th IEEE Real-Time and Embedded Technology and Application Symposium (RTAS), San Jose, CA, September 24-27, 2002.
214. the 9th Conference on Pattern Language of Programs, Allerton Park, IL, September 8-12, 2002.
215. the Workshop on Dependable Middleware-Based Systems, held as a part of DSN 2002, Washington, D.C., June 23-36, 2002.
216. the 2nd TAO Workshop, Arlington, VA, July 19, 2002.
217. the OMG Real-time/Embedded CORBA workshop, Crystal City, VA, July 15–18, 2002.
218. the 16th European Conference on Object-Oriented Programming, University of Malaga, Spain June 10-14, 2002.
219. the Tenth International Workshop on Quality of Service (IWQoS), May 15-17, 2002, Miami Beach, Florida.
220. the International Symposium on Object-Oriented Real-time Distributed Computing (ISORC), Washington DC, April 29 – May 1, 2002.
221. the Seventh IEEE International Workshop on Object-oriented Real-time Dependable Systems (WORDS 2002), January 7-9, 2002, San Diego, CA.
222. the International Workshop on Multimedia Middleware October 5th, 2001, Ottawa, Canada.
223. the OMG Workshop on Real-time and Embedded CORBA, in Reston, VA, June 4-6, 2001.
224. the USENIX 2001 conference, Boston, MA, June 25-30, 2001.
225. the International Symposium on Object-oriented Real-time Distributed Computing (ISORC), May 2-4, Magdenburg, Germany, 2001.
226. the 6th USENIX Conference on Object-Oriented Technologies and Systems, January 27 - February 3, 2001, San Antonio, TX.
227. External reviewer for OOPSLA 2000, Minneapolis, MN, October 2000.
228. the 3rd IFIP International Conference on Trends towards a Universal Service Market (USM'2000), September 12-14, 2000.
229. the International Symposium on Distributed Objects and Applications (DOA '00), OMG, Antwerp, Belgium, September 2000.

230. the ACM SIGCOMM 2000, Stockholm, Sweden, August 30 to September 1st, 2000.
231. the Pattern Languages of Programming (PLoP) conference, Monticello, Illinois, August, 2000.
232. the 9th IEEE International Conference on High-Performance Distributed Computing, August, 2000.
233. the "International Workshop on Software Engineering for Parallel and Distributed Systems" (PDSE 2000), at the 22nd International Conference on Software Engineering (ICSE-2000), in Limerick, Ireland in June, 2000.
234. the 6th IEEE Real-Time Technology and Application Symposium (RTAS), May 17-19, 2000, Washington DC, USA.
235. the 1999 ACM OOPSLA conference, Denver, Colorado, November 1-5, 1999.
236. the IFIP Sixth International Workshop on Protocols For High-Speed Networks (PfHSN '99), Wednesday August 25 – Friday August 27, 1999 Salem, MA.
237. the 1999 IEEE Real-Time Technology and Applications Symposium (RTAS99), Vancouver, British Columbia, Canada, June 2-4, 1999.
238. the 5th USENIX Conference on Object-Oriented Technologies and Systems, May 3-7, 1999, San Diego, CA.
239. Technical workshop committee for the International Software Architecture workshop, ACM SIGSOFT's FSE9 conference in Orlando FL, November 1-5, 1998.
240. the workshop on Software and Performance (WOSP98), Santa Fe, New Mexico, Oct 12-16 1998.
241. the IFIP International Conference on Distributed Systems Platforms and Open Distributed Processing: Middleware '98. September 15-18 1998, The Lake District, England.
242. the TOOLS USA'98 conference. Santa Barbara, California, August 3 - 7, 1998.
243. the IEEE High Performance Distributed Computing conference, Chicago, IL, July 28-31, 1998.
244. 12th European Conference on Object-Oriented Programming, Brussels, Belgium, July 20 - 24, 1998.
245. the 3rd EuroPLoP conference, Kloster Irsee, Germany, July 9-11, 1998.
246. the IEEE International Conference on Configurable Distributed Systems (ICCDS '98), Annapolis, MD, May 4-6, 1998.
247. the IEEE IWQoS '98 in Napa Valley, CA, May 18-20, 1998.
248. the 4th USENIX Conference on Object-Oriented Technologies and Systems, April 26-29, 1998, Santa Fe, New Mexico.
249. the 3rd International Workshop on Software Engineering for Parallel and Distributed Systems, at the 20th International Conference on Software Engineering (ICSE-20), in April 20-21, Kyoto, Japan.
250. the IEEE Conference on Open Architectures and Network Programming, April 3-4, 1998, San Francisco, CA.
251. the Workshop on Middleware for Real-Time Systems and Services, held in conjunction with IEEE Real-time Systems Symposium, December 2nd, San Francisco, California.
252. the Open Signaling for ATM, Internet and Mobile Networks. October 6th and 7th, 1997, Columbia University, New York, NY.
253. the 24th International Conference on Technology of Object-Oriented Languages and Systems (TOOLS Asia '97). Beijing, China, September 22 - 25, 1997.
254. the 4th Pattern Languages of Programming conference, Allerton Park, Illinois, September 3-5, 1997.
255. the 3rd USENIX Conference on Object-Oriented Technologies and Systems, Portland, June 16-19th 1997.
256. Session chair of the Patterns technical paper session at ECOOP '97, June 13th, 1997.
257. the 1997 European Conference on Object-Oriented Programming (ECOOP), June 9-13, 1997, Jyvskyl, Finland.
258. Chair of the technical session on "Distributed Object Computing" for the IFIP/IEEE Fifth International Workshop on Quality of Service (IWQoS '97).

259. the 2nd International Workshop on Software Engineering for Parallel and Distributed Systems, at the 19th International Conference on Software Engineering (ICSE-19) Sheraton Boston Hotel and Towers, Boston, Massachusetts, USA, May 19 and 20, 1997.
260. the 3rd USENIX Conference on Object-Oriented Technologies and Systems, Portland, 1997.
261. the 5th IEEE International Workshop on Object-Orientation in Operating Systems, IEEE TCOS and USENIX, Seattle, Washington, October 27-28, 1996.
262. the 1997 ACM SIGCOMM conference, Cannes, French Riviera, France, September 1997.
263. the 1997 IEEE INFOCOM conference, Kobe, Japan, April 1997.
264. the 1996 IEEE INFOCOM conference, San Francisco, CA, USA, March 24-28, 1996.
265. the 1995 IEEE INFOCOM conference, Boston, Massachusetts, USA, April, 1995.
266. the 3rd IEEE workshop on Architecture and Implementation of High Speed Communication Subsystems (HPCS '95), held in Mystic, Connecticut, August 1995.
267. the 8th IFIP International Working Conference on Upper Layer Protocols, Architectures, and Applications, held in Barcelona, Spain, June 1 to 3, 1994.

Workshops and Panels Organized

1. Co-organized the 1st International Workshop on Data Dissemination for Large scale Complex Critical Infrastructures (DD4LCCI 2010), at the Eighth European Dependable Computing Conference, Valencia, Spain, April 28-30, 2010.
2. Co-organized the OOPSLA Jeopardy panel at OOPSLA 2009, Orlando Floria, October 25-29, 2009.
3. Co-organized a workshop entitled First International Workshop on Software Technologies for Ultra-Large-Scale (ULS) Systems at 29th Int. Conference on Software Engineering, May 20-29th, Minneapolis, MN, 2007.
4. Co-organized a session on architectures, platforms, and standards for QoS-enabled dissemination at the Systems and Information Interoperability Meeting, Oct 25-27, 2006 at the Minnowbrook Conference Center, Blue Mountain Lake, NY.
5. Co-organized a workshop entitled "Breathturn: Ultra Large Scale Systems" at OOPSLA 2006, October 26, 2006, Portland, OR.
6. Co-chair of the NSF workshop on open-source Middleware for Distributed Real-time and Embedded Systems, 7th OMG Real-time/Embedded CORBA workshop, Arlington, VA, July 10–13, 2006.
7. Organized and led a session on architectures, platforms, and standards for real-time tactical information management at the Systems and Information Interoperability Meeting, Oct 18-21, 2005 at the Minnowbrook Conference Center, Blue Mountain Lake, NY.
8. Co-organizer of the technical workshops program at OOPSLA 2005, San Diego, October 16th-20, 2005.
9. Co-organizer for the MODELS 2005 workshop on "MDD for Software Product-lines: Fact or Fiction?," October 2, 2005, Jamaica.
10. Co-organizer of the OOPSLA '02 workshop on "Patterns in Distributed Real-Time and Embedded Systems", Seattle, WA, November, 2002.
11. Co-organizer of the OOPSLA '01 workshop on "Towards Patterns and Pattern Languages for OO Distributed Real-time and Embedded Systems" Tampa Bay, FL, October 14, 2001.
12. Organizer and chair of a panel on real-time extensions to OO middleware, OPENSIG Fall '97 workshop on Open Signaling for ATM, Internet and Mobile Networks Columbia University, October 6-7 1997, New York, NY.
13. Co-organizer of a workshop for the 1997 European Conference on Object-Oriented Programming entitled CORBA: Implementation, Use, and Evaluation, Jyvaskyla, Finland, June 10th, 1997.
14. Organizer and chair of a panel on "QoS and Distributed Systems Platforms" for the IFIP Fifth International Workshop on Quality of Service (IWQoS '97), May 22-24th, 1997, Columbia University, New York.
15. Co-organizer of the OOPSLA '95 workshop on "Patterns for Concurrent, Parallel, and Distributed OO Systems."

16. Co-facilitator of the ECOOP '95 workshop workshop on Pattern Languages of Object-Oriented Programs, Aarhus, Denmark, August 1995.

Reviewer for Professional Submittals

Reviewed papers for the following journals, conferences, books, and grant review processes:

1. Reviewer for COVID-19 proposals to the C3.ai Digital Transformation Institute.
2. *The 21st IEEE International Symposium on Real-time Computing (ISORC)*, Nanyang Technological University, Singapore, 29th - 31st May 2018.
3. *Future Generation Computer Systems*, Elsevier, edited by Aniruddha Gokhale et al., 2016.
4. *IEEE Software*, Special Issue on Next Generation Mobile Computing, edited by James Edmondson et al., 2013.
5. *Software Testing in the Cloud*, edited by Scott Tilley, 2012.
6. Elsevier Information & Software Technology special issue on Software Reuse and Product Lines, 2012.
7. The 2010 Military Communications Conference, Cyber Security and Network Management, San Jose, CA, October 31-November 3, 2010.
8. *Model-Driven Domain Analysis and Software Development: Architectures and Functions*, edited by Janis Osis and Erika Asnina, 2010.
9. Reviewer for the book "Patterns for Parallel Software Design," by Jorge L. Ortega Arjona, Wiley, 2010.
10. Special Issue on Industrial Applications of Aspect Technology for the journal Transactions on Aspect-Oriented Software Development (TAOSD), 2009.
11. *Software Engineering for Self-Adaptive Systems*, edited by Betty H. C. Cheng, Rogerio de Lemos, Holger Giese, Paola Inverardi, and Jeff Magee, Springer, 2009.
12. Special issue on Service Oriented Computing for the ACM Transactions on the Web journal, 2008.
13. Special Issue in Software Reuse: Methods, Processes, Tools and Experiences for the Journal of the Brazilian Computer Society (JBCS), 2007
14. Designing Software-Intensive Systems: Methods and Principles book, 2008
15. Special issue on Patterns for the IEEE Software, 2007
16. IEEE Internet Computing Magazine, 2006.
17. IEEE Transactions on Parallel and Distributed Systems, 2004
18. International Journal of Software Process: Improvement and Practice Special issue - Software Variability: Process and Management
19. IEEE Internet Computing Magazine
20. 2004 NSF NSG panel
21. IEEE Transactions on Parallel and Distributed Computing special issue on Middleware, 2003
22. 2003 NSF ITR panel
23. 2002 NSF CAREER panel
24. IEEE Internet Computing Magazine, 2002
25. NIST Competence Proposals, May 2002
26. DARPA MoBIES program, May 2002
27. DARPA NEST program, May 2002
28. DARPA DASADA program, April 2002
29. Elsevier Journal of Systems and Software Special Issue on Software Architecture: Engineering Quality Attributes, 2002
30. IEEE Communications Magazine, Evolving Communications Software: Techniques and Technologies, 2001
31. DARPA Network Embedded Software Technology (NEST) program, 2001

32. DARPA Software Enabled Control (SEC) program, 2000
33. IEEE Concurrency magazine, Object-Oriented Systems Track, 1999
34. IEEE Journal on Selected Areas in Communications special issue on "Service Enabling Platforms for Networked Multimedia Systems," 1999
35. IEEE Journal of Communications and Networks, 1999
36. Reviewer for the 4th Pattern Languages of Programming Design book published by Addison Wesley
37. The International Journal of Time-Critical Computing Systems, special issue on Real-time Middleware, edited by Wei Zhao
38. Next Generation Internet (NGR) networking research review panel, October 1998
39. IEE Transactions on Software Engineering, special issue on Configurable Distributed Systems
40. Theme issue on Symbolic Modeling in Practice for the Communications of the ACM
41. "Multimedia DBMS and the WWW" Minitrack at the 32nd Hawaii International Conference on System Sciences, 1999
42. "Dependable Distributed Systems" Minitrack at the 32nd Hawaii International Conference on System Sciences, 1999
43. IEEE Computer special issue on "Design Challenges for High-Performance Network Interfaces," 1998
44. 1998 NSF Experimental Software Systems review panel.
45. ACM SIGMetrics Conference, 1998
46. ACM Transactions on Software Engineering Methods
47. Special Issue on Patterns and Pattern Languages for the journal of Theory and Practice of Object Systems, (Stephen P. Berczuk, Editor), John Wiley and Sons, 1995
48. Special Issue of Computer Communications on Building Quality of Service into Distributed Systems
49. IEEE Communications Magazine
50. IEEE/ACM Journal of Transactions on Networking
51. Communications of the ACM
52. IEE/BCS Distributed Systems Engineering Journal
53. Software Practice and Experience, John Wiley and Sons
54. 1998, 1997, and 1996 NSF networking program
55. 1996 NSF software engineering and programming languages CAREER panel
56. 1994 California MICRO (Microelectronics Innovation Computer Research Opportunity) engineering computer network grant review process
57. IEEE Conference on Parallel and Distributed Computing Systems, 1994
58. IEEE International Conference on Computer Communications and Networks, 1994
59. IEEE INFOCOM conference, 1994
60. 1993 NASA Applied Information Systems Research grant review process
61. 1992 California MICRO (Microelectronics Innovation Computer Research Opportunity) engineering computer network grant review process
62. 7th *IFIP International Conference on Upper Layer Protocols, Architectures, and Applications*, 1992
63. The 1992 Special Issue on Measurement for IEEE Journal Transactions on Software Engineering

Memberships: IEEE, ACM, and USENIX

Patents

1. US patent 7,523,471 – "Interpretive network daemon implemented by generic main object," in conjunction with Karlheinz Dorn, Dieter Quehl, Detlef Becker, and Christian Scharf of SIEMENS Medical Engineering, Erlangen, Germany, 2009.

Theses Supervised

- *Doctoral and Masters Committees Chaired*

  1. Co-chair of the doctoral dissertation defense for Peng Zhang, August 2018.
  2. Co-chair of the doctoral dissertation defense for James Edmondson, March 2012.
  3. Co-chair of the doctoral topic defense for James Edmondson, December 2011.
  4. Co-chair of the doctoral dissertation defense for Will Otte, November 2011.
  5. Chair of the doctoral dissertation defense for Brian Dougherty, March 2011.
  6. Chair of the doctoral topic defense for Brian Dougherty, June 2010.
  7. Chair of the masters defense for Pooja Varshneya, May 2010.
  8. Chair of the doctoral topic defense for Nilabja Roy, March 2010.
  9. Chair of doctoral topic defense for Joe Hoffert, November 2009.
  10. Chair of the doctoral dissertation defense for Jai Balasubramanian, September 2009.
  11. Chair of masters defense for Friedhelm Wolf, March 2009.
  12. Chair of the doctoral dissertation defense for Nishanth Shankaran, October 2008.
  13. Chair of the doctoral dissertation defense for Jules White, October 2008.
  14. Chair of doctoral dissertation defense for Gan Deng, December 2007.
  15. Chair of doctoral dissertation defense for Krishnakumar Balasubramanian, September 2007.
  16. Chair of the doctoral topic defense for Nishanth Shankaran, April 2007.
  17. Chair of doctoral topic defense for Krishnakumar Balasubramanian, March 2006.
  18. Chair of doctoral topic defense for Gan Deng, March 2006.
  19. Chair of final doctoral dissertation defense for Arvind Krishna, December 2005.
  20. Chair of MS thesis committee for Emre Turkay, summer 2005.
  21. Chair of doctoral topic defense for Arvind Krishna, summer 2005.
  22. Chair of MS thesis committee for Ossama Othman, December, 2002.
  23. Chair of doctoral dissertation committee for Carlos O'Ryan, May, 2002.
  24. Chair of dissertation topic defense committee for Carlos O'Ryan, September, 2001.
  25. Chair of masters committee for Nagarajan Surendran, August, 1999.
  26. Chair of masters committee for Alexander Babu Arulanthu, July, 1999.
  27. Chair of oral exam committee for Chris Gill, June, 1999.
  28. Chair of doctoral exam committee for Andy Gokhale, May, 1998.
  29. Chair of masters exam committee for Sumedh Mungee, May, 1998.
  30. Chair of masters exam committee for Sergio Flores, May, 1998.
  31. Chair of masters committee for Prashant Jain, June 1997.
  32. Chair of doctoral topic defense for James Hu, February 1997.
  33. Chair of masters committee for Tim Harrison, February 1997.
  34. Chair of doctoral topic defense committee for Andy Gokhale, October, 1996.

- *Doctoral and Masters Committees Member*

  1. Served on the doctoral dissertation defense for Anirban Bhattacharjee, January 2020.
  2. Served on the doctoral topic defense for Anirban Bhattacharjee, April 2019.
  3. Served on the doctoral dissertation defense for Shunxing Bao, September 2018.
  4. Served on the doctoral dissertation defense for Shashank Shekhar, May 2018.
  5. Served on the doctoral dissertation defense for Fangzhou Sun, March 2018.
  6. Served on the doctoral topic defense for Shunxing Bao, March 2018.
  7. Served on the doctoral topic defense for Peng Zhang, January 2018.
  8. Served on the doctoral dissertation defense for Marcelino Rodriguez-Cancio, December 2017.
  9. Served on the doctoral dissertation defense for Yao Pan, November 2017.
  10. Served on the doctoral topic defense for Fangzhou Sun, September 2017.
  11. Served on the doctoral topic defense for Shashank Shekhar, May 2017.

12. Served on the doctoral topic defense for Yao Pan, February 2017.
13. Served on the doctoral dissertation defense for Faruk Caglar, July 2015
14. Served on the doctoral dissertation defense for Wei Yan, May 2015.
15. Served on the doctoral dissertation defense for Kyoungho An, March 2015.
16. Served on the MS thesis committee for Songtao Hei, March 2015.
17. Served on the MS thesis committee for Meng Wang, March 2015.
18. Served on the doctoral dissertation defense for Sean Hayes, January 2015.
19. Served on the doctoral dissertation defense for Hamilton Turner, November 2014.
20. Served on the doctoral topic defense for Faruk Caglar, November 2014.
21. Served on the doctoral topic defense for Hamilton Turner, February 2014.
22. Served on the doctoral dissertation defense for Fan Qui, February 2014.
23. Served on the doctoral dissertation defense for Xiaowei Li, May 2013.
24. Served on the doctoral topic defense for Fan Qiu, April 2013.
25. Served on the doctoral dissertation defense for Janos Mathe, August 2012.
26. Served on the doctoral dissertation defense for Tripti Saxena, July 2012.
27. Served on the doctoral dissertation defense for Akshay Dabholkar, April 2012.
28. Served on the doctoral topic defense for Xiawei Li, March 2012.
29. Served on the doctoral topic defense for Janos Mathe, August 2011.
30. Served on the doctoral dissertation defense for Liang Dai, April 2011.
31. Served on the doctoral dissertation defense for Daniel Balasubramanian, March 2011.
32. Served on the doctoral topic defense for Will Otte, February 2011.
33. Served on the doctoral topic defense for Akshay Dabholkar, February 2011.
34. Served on the doctoral dissertation defense for Joe Hoffert, February 2011.
35. Served on the doctoral topic defense for Tripti Saxena, January 2011.
36. Served on the doctoral dissertatin defense for Nilabja Roy, November 2010
37. Served on the doctoral topic defense for Daniel Balasubramanian, October 2010.
38. Served on the doctoral dissertation defense for Sumant Tambe, September 2010.
39. Served on the doctoral topic defense for Sumant Tambe, April 2010.
40. Served on the doctoral dissertation defense for John Kinnebrew, March 2010.
41. Served on the doctoral dissertation defense for Shanshan Jiang, November 2009.
42. Served on the doctoral dissertation defense for James Hill, March 2009.
43. Served on the doctoral topic defense for James Hill, October 2008.
44. Served on the doctoral topic defense for Jai Balasubramanian, August 2008.
45. Served on the doctoral topic defense for Liang Dai, December 2008.
46. Served on the doctoral topic defense for Shanshan Jiang, November 2008.
47. Served on the doctoral topic defense for Jules White, April 2008.
48. Served on the doctoral topic defense for Amogh Kavimandan, February 2008.
49. Served on the doctoral dissertation defense for Amogh Kavimandan, November 2008.
50. Served on the doctoral topic defense for Amogh Kavimandan, February 2008.
51. Served on the doctoral dissertation defense for Michael Stal, University of Groningen, March 2007.
52. Served on the doctoral topic defense for Karlkim Suwanmongkol, fall 2004.
53. Served on the doctoral dissertation topic defense committee for Aditya Agrawal, July, 2004.
54. Served on the doctoral dissertation defense for Angelo Corsaro, July 2004.
55. Served on the doctoral dissertation defense for Nanbor Wang, April 2004.
56. Served on the doctoral topic defense for Angelo Corsaro, October 2003.
57. Served on the doctoral dissertation defense committee for Jonathan Sprinkle, July, 2003.
58. Served on the doctoral dissertation topic defense committee for Aditya Agrawal, June, 2003.
59. Served on masters committee for Kirk Kelsey, March 2003.
60. Served on the dissertation topic defense committee for Jonathan Sprinkle, February, 2003.

61. Served as external examiner for Bob Jolliffe's masters thesis Department of Computer Science, University of South Africa, March, 2003.
62. Served on the doctoral dissertation committee for Irfan Pyarali, December, 2001.
63. Served on the doctoral dissertation committee for Chris Gill, December, 2001.
64. Served as external examiner for Daniel Heggander's Ph.D. dissertation in the Department of Software Engineering and Computer Science at Blekinge Institute of Technology, Sweden, September, 2001.
65. Served as external examiner for Mohammad Radaideh's masters thesis in the Electrical Engineering department at McMaster's University, Canada, Winter 2000.
66. Served as external examiner for David Holmes' Ph.D. dissertation in the information and computer sciences department at Macquarie University, Sydney, Fall 1999.
67. Served on final doctoral dissertation committee for Priya Narasimhan, August, 1999.
68. Served on the doctoral final dissertation defense for Christo Papadopoulos, August, 1999.
69. Served on dissertation topic defense for Michael Plezbert, February, 1999.
70. Served on masters committee for Craig Nauman, February, 1999.
71. Served on the doctoral exam committee for Chuck Cranor, July, 1998.
72. Served on masters exam committee for Mihai Tutunaru, April, 1998.
73. Served on the doctoral exam committee for Michael Plezbert, June, 1997.
74. Served on masters committee for Todd Rogers, June 1997.
75. Served on masters committee for Robert Engel, January 1997.
76. Served on committee for final doctoral dissertation defense of R. Gopalakrishnan, November, 1996.
77. Served on committee for final doctoral dissertation defense of Lorrie Cranor, September, 1996.
78. Served on the doctoral dissertation topic proposal committee for Christos Papadopoulos July, 1995.
79. Served on the doctoral dissertation topic proposal committee for Charles Cranor December, 1994.
80. Served on oral exam committee for Andy Gokhale December, 1994.
81. Served on the doctoral dissertation proposal committee for Lorrie Cranor, December, 1994.
82. Served on the doctoral final dissertation defense committee for Donald Wilcox, November, 1994.
83. Served on masters committee for Madhavapeddi Shreedhar, September, 1994
84. Served on the doctoral dissertation topic proposal committee for R. Gopalakrishnan, September, 1994.

- *Doctoral Student Advisees and Co-Advisees*

  1. Mike Walker (USA)

- *Graduated PhD Students*

  1. Jaiganesh Balasubramanian, Ph.D., 2009, currently works for Citigroup, New York, NY.
  2. Krishnakumar Balasubramanian, Ph.D., 2007, Mathworks, Boston, MA.
  3. Angelo Corsaro, Ph.D. 2004, PrismTechnologies, Parise France.
  4. Gan Deng, Ph.D., 2007, Citigroup, Charleston, SC.
  5. Brian Dougherty, Ph.D. 2011, Optio Labs, Nashville, TN.
  6. James Edmondson, Ph.D., 2012, Member of the Technical Staff, Software Engineering Institute, Pittsburgh, PA.
  7. Chris Gill, Ph.D. 2001, Professor, Washington University, St. Louis, MO.
  8. Andy Gokhale, Ph.D. 1998, Associate Professor, Vanderbilt University, Nashville, TN.
  9. James Hill, Ph.D., 2009, Assistant Professor, Indiana University, Purdue University, Indianapolis.
  10. Joe Hoffert, Ph.D. 2011, Assistant Professor, University of Edmonton, Canada.
  11. John Kinnebrew, Ph.D., 2010, ISIS, Nashville, TN.

12. Arvind Krishna, Ph.D. 2005, Qualcomm, San Diego, CA.
13. Irfan Pyarali, Ph.D. 2001, CitiGroup, New Jersey.
14. Nilabja Roy, Ph.D. 2011, Research Scientist, Institute for Software Integrated Systems, Nashville, TN.
15. Carlos O'Ryan, Ph.D., 2002, CitiGroup, Charleston, SC.
16. Nishanth Shankaran, Ph.D., 2008, Amazon, Seattle, WA.
17. Nanbor Wang, Ph.D. 2004, Research Scientist, Tech-X, Boulder, Colorado.
18. Jules White, Ph.D. 2008, Assistant Professor, Virginia Tech, Blackburg, VA.

- *Graduated Masters and Ugrad Students*

1. Alexander Babu Arulanthu, MS 1999, Sylantro, Campbell, CA.
2. Everett Anderson, BS 1998, Sun, Mountain View, CA.
3. Shawn Atkins, BS 1998, Lucent, Columbus, OH.
4. Matt Braun, BS 1998.
5. Darrell Brunsch, BS 1999, Microsoft, Redmond, WA.
6. George Edwards, BS 2004, Ph.D. student at University of Southern California.
7. Sergio Flores-Gaitan, MS 1998, Microsoft, Redmond, WA.
8. Priyanka Gontla, MS 2000, UBS, Irvine, CA.
9. Pradeep Gore, MS 2000, OOMWorks, New Jersey.
10. Tim Harrison, MS 1997, Mayasoft, Palo Alto, CA.
11. Prashant Jain, MS 1997, IBM Research, India.
12. Vishal Kachroo, MS 1999, Stentorsoft, CA.
13. Michael Kircher, BS 1998, Siemens CT, Munich, Germany.
14. Yamuna Krishnamurthy, MS 2000, OOMWorks, New Jersey.
15. Tao Lu, MS 2003, Trading Technologies, Chicago, IL.
16. Sumedh Mungee, MS 1998, Fujitsu, Santa Clara, CA.
17. Bala Natarajan, MS 2000, Veritas, India.
18. Kirthika Parameswaran, MS 2000, Telcordia, Piscataway, NJ.
19. Stoyan Paunov, MS 2006, working at Bloomberg, NYC.
20. Ossama Othman, MS 2002, independent consultant, Portland, OR.
21. Marina Spivak, MS 2000, AT Desk, Charleston, SC.
22. Nagarajan Surendran, MS 1999, Sylantro, Campbell, CA.
23. Emre Turkay, MS 2005, Turkey.
24. Pooja Varshneya, May 2010, Zircon Computing, Wayne, NJ.
25. Seth Widoff, BS 1998, independent consultant, San Francisco, CA.
26. Ming Xiong, MS 2007, currently working at AT Desk, Charleston, SC.

- *Former Staff*

1. Chris Cleeland, OCI, St. Louis, MO.
2. Ray Klefstad, Research Assistant Professor, University of California, Irvine.
3. Boris Kolpackov, Independent Consultant, South Africa.
4. Fred Kuhns, Research Associate, Washington University, St. Louis, MO.
5. David Levine, Director of Engineering, CombineNet, Inc, Pittsburgh, PA.
6. Will Otte, Institute for Software Integrated Systems, Nashville, TN
7. Jeff Parsons, Optio Labs, Nashville, TN
8. Jules White, Ph.D. 2008, Vanderbilt University, Nashville, TN

Research Support

Total research funding since June 1995: $41,899,342

- Sole PI: $12,030,403
- Co-PI: $29,868,939

Grants and Contracts Received

1. "Automated Clothing Simulation and Human Avatar Generation Engine" NSF, 9/15/2019 to 2/29/2020, $50,000.
2. "Digital Thread Modelling Environment (DTME)," AFRL (subcontract through Securboration), 8/20/2019 to 8/20/2021, $250,000, with Jules White.
3. "Creating an Evidence-based Professional Development Support Tool for Pre-K Coaches and Teachers," Department of Education (IES), $1,399,992, 7/1/18 to 6/30/22, Co-PI with Caroline Christopher.
4. "Blockchain as Middleware Services for Transactive Energy Applications," Siemens, 4/1/2017 to 9/30/2018, $274,397, co-PI Abhishek Dubey.
5. "Children Eating Well (CHEW) Smartphone Application for WIC Families," USDA 4/15/2017 to 4/14/2022, , co-PI with Pam Hull.
6. "Industrial Internet Architecture," Varian Medical Systems, Inc., 10/1/14 to 12/31/18, $288,808, co-PI Jules White.
7. Securboration, "Virtualize Combat System Environment (ViCE)," $15,000, 1/1/18-3/26/18, Co-PI with Jules White.
8. "Container Hopping at Random Intervals or Targeted-Attacked (CHARIOT)," OSD SBIR with Securboration, 1/19/17 to 1/19/18, $35,000.
9. "A Digital Platform for Social and Emotional Learning," NSF, 7/1/2018 to 12/31/2018, $50,000.
10. "Blockchains Data Exchange via FHIR," Solaster, 9/1/18 to 8/31/19, $30,000, co-PI with Jules White.
11. "Advancing Data-Driven mHealth Technologies for Long-term Health and Health Behavior Change," Trans-Institutional Program (TIPs), Vanderbilt University, 9/1/2016 to 8/31/2018, $100,000, Co-PIs Jules White, Trent Rosenbloom, and Heidi Silver.
12. "IMMoRTALS," DARPA (through subcontract with Raytheon), 12/1/15 to 12/1/19, $1,235,567, Co-PI Jules White.
13. "The Robust Software Modeling Tool (RSMT)," ONR, 7/1/14 to 6/30/17, $749,904, Co-PI Jules White.
14. "Building Resilient Distributed Systems for Next Generation Mobile Adhoc Cyber Physical Systems," Siemens 9/1/14 to 8/31/17, $438,188, co-PI Abhishek Dubey.
15. "Capability-Based Technical Reference Frameworks for Open System Architecture Implementations," OSD ASDR&E, 7/3/14 to 9/11/14, $29,690.
16. "Progressive Model Generation for Adaptive Resilient System Software," ONR STTR, 8/6/13 to 1/31/14, $49,406, co-PI Jules White.
17. "Systems and Software PRodUcibility Collaboration and Experimentation Environment (S2PRUCE2)," AFRL (subcontract through Lockheed Martin Advanced Technology Lab), 1/4/13 to 9/30/13, $108,645, with A. Gokhale.
18. "Stochastic Hybrid Systems Modeling and Middleware-enabled DDDAS for Next-generation US Air Force Systems," AFOSR, 10/1/13 to 9/30/16, $935,402, Co-PI(s) Aniruddha Gokhale and Xenofon Koutsoukous.
19. "Workshop on Computing Clouds for Cyber Physical Systems," NSF, 9/15/12 to 12/31/2013, $73,738.
20. "Using Social Learning to Improve Adolescent Diabetes Protocol Adherence," NIH, $1,798,029, 9/1/12-8/31/16, PI Shelagh Mulvaney.

21. "Systems and Software PRodUcibility Collaboration and Experimentation Environment (S2PRUCE2)," AFRL (subcontract through Lockheed Martin Advanced Technology Lab), 4/3/08 to 9/30/12, $381,708, with A. Gokhale.
22. "Team for Research in Ubiquitous Secure Technology (TRUST)," NSF (subcontract through UC Berkeley), 6/1/05 to 10/31/15, $5,970,900, co-PI(s) J. Sztipanovits and G. Karsai.
23. "Android Mobile Military Middleware Objects (AMMO)," DARPA, 9/30/10 to 5/02/12, $1,074,093, with S. Neema.
24. "Cyber-physical multi-Core Optimization for Resource and cachE effectS (C2ORES)", AFRL, 8/1/12 to 7/31/13, $300,000, with A. Gokhale.
25. "Model-Driven Tools for Distributed- and Multi-Core Middleware," AFRL, 4/10/12 to 10/2/12, $30,000, with A. Gokhale.
26. "Cloud Environmental Analysis and Relief," NSF, 8/1/10 to 7/31/12, $66,000, with A. Gokhale.
27. "Environment-Specific Inter-ORB Protocols," SAIC, 8/1/09 to 5/23/12, $348,350, with A. Gokhale.
28. "CoSMIC and CIAO Enhancements," Northrop Grumman, 7/1/09 to 9/30/10, $878,661
29. "Integrating DDS and CCM," Northrop Grumman, 7/1/09 to 2/15/10, $85,000
30. "Early Integration and Performance Testing of Heterogeneous Computing Environments," Australian Defence Science and Technology Organization (DSTO), 1/9/09 to 7/30/09, $180,000.
31. "Predictive Cache Modeling and Analysis," AFRL (subcontract through Lockheed Martin Aeronautics), 3/1/10 to 9/30/11, $100,000.
32. "Applications of Reliable, Fast Event Notification," Raytheon, 6/1/2008 to 5/30/2009, $60,000.
33. "Open Modular Embedded Architectures," General Electric Global Research, 8/1/2008 to 1/31/2009, $35,000.
34. "Analysis and Simulation Techniques for Next-generation Motion Control Systems," Aagard, 8/1/2008 to 1/31/2009, $13,850 with Akos Ledeczi.
35. "Open Modular Embedded Architectures," Raytheon, 8/1/2008 to 3/31/2009, $74,276.
36. "NAOMI," LMCO Advanced Technology Lab, 9/1/2007 to 11/30/2009, $290,000.
37. "IU/CRC Membership," Siemens, 1/1/2009 to 12/31/2009, $40,000.
38. "Enterprise Application Configuration in the Context of Model Driven Software Development and Software Factories," Siemens Corporate Research, 10/1/07 to 9/31/08 $91,798.
39. "Modular Extendable Demonstration of an Upgradeable Space Architecture (MEDUSA)," DARPA (subcontract through Lockheed Martin Advanced Technology Center), 2/1/2008 to 1/31/2011, $600,000.
40. "CCM Middleware Implementation and Integration," PrismTech, 6/8/2007 to 3/31/2007, $33,778.
41. "The Smart Sensor Web Architecture," NASA (subcontract through Lockheed Martin Advanced Technology Center), 12/15/06 to 11/14/09, $467,728, co-PI G. Biswas.
42. "I/UCRC Membership," General motors, 1/1/2008 to 12/31/2008, $100,000, co-PI G. Karsai.
43. "Pollux: Enhanding the Real-time QoS of the Global Information Grid," AFRL, 2/24/06 to 7/24/08, $1,242,718, co-PI M. Reiter.
44. "Intelligent Middleware for Next Generation Petascale Scientific Computing," Vanderbilt Discover Grant, 5/1/05 to 6/30/07, $100,000, co-PI(s) A. Gokhale and P. Sheldon.
45. "Air Force Center for Research on GIG/NCES Challenges," AFOSR (subcontract through UC Berkeley), 3/1/06 to 2/28/08, $600,000, co-PI J. Sztipanovits.
46. "Quality of Service Enabled Dissemination," AFRL (subcontract through BBN Technologies), 12/31/2007 to 9/30/2009, $320,000.
47. "A Fault-Tolerant Real-Time CORBA Naming Service," US Navy (subcontract through Tech-X Corp), 11/1/2007 to 4/30/2010, $175,000, co-PI A. Gokhale.
48. "System Execution Modeling Technologies for Large-scale Net-centric Systems," AFRL, 1/1/2008 to 12/31/2010, $244,000.

49. "Model-Driven Computing for Distributed Real-time Embedded Systems," Raytheon, 8/31/04 to 8/31/08, $500,000.
50. "NAOMI," LMCO Advanced Technology Lab, 9/1/2007 to 11/30/2007, $50,000.
51. "ACE/TAO Improvement Techniques and Solutions, Veritas/Symantec, 3/31/05 to 4/31/08, $198,500.
52. "Adaptive Resource Control for Certificable Systems," DARPA (subcontract through LMCO Advanced Technology Lab), 3/30/2007 to 12/31/2007, $50,000.
53. "Survivable Internet-scale Distributed Systems," IDA, 3/30/2007 to 12/31/2007, $60,000.
54. "QUality of service pICKER (QUICKER)," LMCO Advanced Technology Lab, 3/30/2007 to 12/31/2007, $60,000.
55. "Thimble," LMCO Advanced Technology Lab, 3/30/2007 to 12/31/2007, $60,000.
56. "CADynCE Experimentation Operations (CEO)," DARPA (subcontract through LMCO Advanced Technology Lab), 8/31/2007 to 12/31/2007, $25,000.
57. "Real-time Discovery for Pub/Sub Middleware in WANs," US Navy (subcontract through Tech-X Corp), 6/16/2007 to 9/31/2007, $15,000.
58. "GEMS Utilization Test Suite," LMCO Advanced Technology Lab, 9/1/07 to 11/30/07, $50,000.
59. "Advanced Information Systems and Technology Program," NASA (subcontract through LMCO Advanced Technology Center), 11/13/2007 to 12/1/2007, $22,000, co-PI G. Biswas.
60. "Design for Adaptivity and Reliable Operation of Software Intensive Systems," NSF CNS-0613971, 9/1/06 to 8/31/08, $199,867, co-PI(s) S. Abdelwahed and G. Karsai.
61. "Software Technologies Targeting Interoperability for Systems of Systems," Army Research Lab, 1/15/07 1/14/10, $851,567, co-PI(s) G. Karsai and J. Sztpanovits.
62. "Software Wind Tunnel (SWiT) Capabilities," Lockheed Martin Advanced Technology Lab, 8/1/06 to 12/31/06, $60,000.
63. "High-Confidence Software Platforms for Cyber-Physical Systems," NSF, 5/1/06 to 7/30/08, $129,179.
64. "Applying AOP to Develop of Component Synthesis with MDD," Siemens, 3/1/03 to 2/28/07, $400,005.
65. "Addressing Domain Evolution Challenges in Model-Driven Software Product-lines," Siemens Corporate Research, 10/1/05 9/31/07, $100,000.
66. "A Fault Tolerant Real-time CORBA Naming Service," US Navy (subcontract through Tech-X Corp), 11/1/05 to 8/31/06, $15,000.
67. "The SYstem DEployment and Configuration AssisteR (SYDECAR)," Lockheed Martin Advanced Technology Lab, 8/1/05 to 8/1/08, $500,000.
68. "Future Combat Systems: Software Architecture Engineering," DARPA (subcontract through Boeing), 1/28/05 to 12/31/07, $2,764,226, co-PI(s) J. Sztipanovits and G. Karsai.
69. "Development of an Eclipse Plug-in," PrismTech, 4/28/05 to 9/30/05, $25,000.
70. "Prometheus: Enhancing the QoS of the JBI," AFRL, 3/25/05 to 12/31/05, $500,000, co-PI(s) K. Birman and Mike Reiter.
71. "A Testbed for Assuring Quality of Software for DRE Systems," ONR, 2/15/05 to 1/31/06, $200,000, co-PI(s) A. Gokhale and A. Porter.
72. "Enhancing the QoS of SOAs Using Eclipse-based MDD," IBM, 2/15/05 to 1/31/06, $29,515, co-PI A. Gokhale.
73. "Model-Driven Development of BEEP Application Protocols," Cisco, 12/15/04 to 12/14/05, $57,976, co-PI A. Gokhale.
74. "Evaluating CORBA Middleware for Space Systems," NASA (subcontract through Lockheed Martin Advanced Technology Center), 9/23/04 to 11/30/06, $186,180, co-PI G. Biswas.
75. "Refactoring Techniques to Reduce Middleware Resource Utilization," Qualcomm, 10/31/04 to 10/31/05, $104,000, co-P B. Natarajan.
76. "Model-Driven Development for Software Defined Radios," BAE Systems, 12/1/04 to 3/31/05, $32,000.

77. "Enhancing the Robustness and Performance of TENA," DISA (subcontract through SAIC and OSC), 7/1/04 to 12/31/04, $75,000.
78. "QoS-enabled Fault Tolerant Middleware and MDA Tools," Lockheed Martin MSS, 4/1/03 to 12/31/04, $516,434.
79. "Trustworthiness in Embedded Systems," NSF ITR CCR-032574, 9/31/03 to 8/31/06, $210,454.
80. "ACE+TAO Enhancements," OCI, gift $20,000.
81. "Acquiring Accurate Dynamic Field Data Using Lightweight Instrumentation," NSF ITR CCR-0312859, 10/1/02 to 9/31/07, $1,850,000, co-PI(s) A. Porter, D. Notkin, and A. Karr.
82. "Intergovernmental Personnel Act," DARPA, 6/1/00 to 5/31/02, $198,934.
83. "Optimizing Component Models," DARPA, 4/1/01 to 6/31/02, $210,000.
84. "HLA RTI Next-generation," DMSO (subcontract through SAIC), 6/1/01 to 12/31/01, $70,895.
85. "ACE Enhancements for Windows NT and Windows CE," Siemens Medical Engineering, 2/1/00 9/19/01, $112,000.
86. "Scalable and Fault Tolerant Middleware," AFRL MURI, 12/1/99 to 3/31/02, $253,701.
87. "Protocol Engineering Research Center," AFOSR MURI, 6/15/00 to 6/14/03, $264,720, co-PI Tatsuya Suda.
88. "Optimizing ORBs for Network Management," Cisco Systems, 1/1/00 to 12/31/00, $100,000.
89. "TAO Optimizations," Raytheon, 10/1/99 to 6/01/01, $50,000.
90. "ACE+TAO on pSoS," Motorola, 8/15/99 to 12/31/99, $30,000.
91. "Real-time Distributed Object Computing," Sprint, 8/15/99 8/14/00, $133,068.
92. "TAO Enhancements," Krones, 8/1/99 to 9/1/99, $5,000.
93. "ACE Enhancements," ICOMVERSE, gift, $20,000.
94. "Weapon Systems Open Architecture," Boeing, 7/15/99 to 1/31/00, $51,491.
95. "Fault Tolerant CORBA," Motorola Labs, 7/15/99 to 7/14/00, $139,000.
96. "TAO Enhancements," Global MAINTECH, 7/1/99 to 8/1/99, $5,000.
97. "ACE QoS Extensions," Motorola Trunking, 6/1/99 to 8/1/99, $5,000.
98. "CORBA Interceptors," Experian, 5/15/99 7/14/99, $10,000.
99. "DCOM performance evaluation," Microsoft, gift, $30,000.
100. "TAO Improvements," OCI, 4/1/99 to 9/31/00, $27,000.
101. "Middleware Optimizations," Telcordia, 2/1/99 to 1/31/00, $52,700.
102. "Minimum CORBA," Hughes Data Networking, 4/1/99 to 3/31/00, $50,000, co-PI David Levine.
103. "Framework Usage Patterns," Siemens Corporate Research, 4/1/99 to 3/31/00, $35,000.
104. "Dynamic Scheduling and Real-time ORB Optimizations," Boeing, 10/1/98 9/30/99, $184,860.
105. "Distributed Object Computing Middleware," Nortel, 11/1/98 10/31/99, $75,000.
106. "ACE subsetting," "ACE subsetting,," Nokia, 10/8/98 4/8/99, $30,000.
107. "Boeing Research Fellowship," Boeing, 9/1/98 8/31/00, $81,486.
108. "Patterns and Frameworks Reuse Curriculum," Lucent Bell Labs, 9/1/98 12/31/98, $31,200.
109. "Patterns, Frameworks, and Components," Siemens ZT, 12/1/98 5/31/00, $175,000.
110. "High availability frameworks," Lucent, 9/1/98 8/31/99, $39,400.
111. "Real-time Distributed Object Computing," Sprint, 8/1/98 7/31/99, $288,194.
112. "Distributed Object Integration for the Quorum Project," DARPA S30602-98-C-0187 (subcontract through BBN), 9/1/98 8/31/01, $448,643, co-PI(s) R. Schantz and J. Loyall.
113. "Evaluating a Framework for Dynamic Distributed Real-Time Scheduling,," USENIX, gift, $18,000.
114. "Distributed Object Computing," Microsoft, gift, $20,000.
115. "Distributed Object Visualization Environment," Lockheed Martin, 5/1/98 to 11/31/99, $54,000.

116. "Distributed Object Computing with Adaptive End-to-end QoS Guarantees," DARPA 9701561, 8/1/97 to 7/31/00, $873,625.
117. "Real-time CORBA for Telecommunications," Lucent, 12/1/97 to 11/31/98, $100,000.
118. "Developing an HLA-compliant RTI with ACE," SAIC, 12/15/97 to 1/31/00, $228,075.
119. "Real-time CORBA for Wireless," Motorola LMPS, 10/15/97 to 10/14/98, $200,000.
120. "Real-time CORBA for Avionics," Computing Devices International, 10/15/97 to 10/14/98, $39,050.
121. "Dynamic Scheduling of Real-time OFPs," Boeing, 9/1/97 to 8/31/98, $224,604.
122. "Distributed Object Visualization," Siemens MED, 10/1/97 to 9/1/98, $40,000.
123. "The ADAPTIVE Communication Environment," Siemens MED, 10/1/97 to 9/1/98, $70,000.
124. "The Architect's Assistant," Siemens Corporate Research, 9/1/97 to 8/1/98, $35,000.
125. "Monitoring, Visualization, and Control of High Speed Networks," NSF NCR-97-14698, 9/1/97 to 8/31/01, $1,200,000, co-PI(s) G. Parulkar, E. Kraemer, J. Turner, and R. Cytron .
126. "Adaptive Software Technology Demonstration (ASTD)," AFRL (subcontract through Boeing), 9/1/98 to 8/31/02, $1,200,000, co-PI(s) B. Doerr, D. Allen, and R. Jha.
127. "Patterns, Frameworks, and Components for Multimedia Systems," Siemens Research, 1/97 to 6/98, $150,000.
128. "Adaptive Servers for High-Performance Imaging," Kodak Networked Imaging Tech. Center, 11/96 to 11/97, $40,000.
129. "Real-time CORBA," Sprint, 9/96 to 12/97, $345,000, co-PI G. Parulkar.
130. "OpenMAP – Object-Oriented Components for Real-time Avionics," McDonnell Douglas, 9/96 to 9/97, $241,591.
131. "Compilation and Automatic Optimization of Network Protocol Implementations," NSF NCR-9628218, 8/96 to 8/99, $411,025, co-PI(s) G. Varghese and R. Cytron (PI).
132. "Medical Imaging with Java and the WWW," SIEMENS Medical Engineering, 8/96 to 7/97, $125,000.
133. "The ADAPTIVE Communication Environment," SIEMENS Medical Engineering, 8/96 to 7/97, $90,000.
134. "High-performance Distributed Medical Imaging," Kodak Imaging, 12/94 to 8/96, $55,152, co-PI J. Blaine.
135. "Design Patterns for Concurrent Object-Oriented Networking," Object Technologies International, 4/96 to 4/97, $25,000.
136. "Distributed Object Computing with CORBA and DCE," Bellcore, 5/96 to 12/96, $32,978.
137. "The ADAPTIVE Communication Environment," SIEMENS Medical Engineering, 6/95 to 6/96, $170,000.

Courses Taught

Courses at Vanderbilt University

1. CS 215 – Intermediate Software Design, Spring 2006
2. CS 251 – Intermediate Software Design, Spring 2007, Spring 2008, Spring 2009, Fall 2009, Spring 2010, Spring 2012, Spring 2013, Spring 2014, Spring 2015, Spring 2016
3. CS 291/242 – Software Design Studio, Fall 2004
4. CS 291/242 – Software Design Studio, Fall 2003
5. CS 292 – Beyond the Oneway Web, Fall 2008
6. CS 278 – Software Engineering, Fall 2008
7. CS 279 – Software Engineering Projects, Spring 2010
8. CS 282 – Principles of Operating Systems II, Spring 2003, Spring 2004, Fall 2005, Fall 2007, Fall 2012, Fall 2013, Fall 2014, Fall 2015, Fall 2016, Spring 2017

9. UNIV 278 – Tackling Big Questions with Mobile Cloud Computing, Fall 2016, Spring 2017, Fall 2017
10. CS 395 – Advanced Network Software Design, Fall 2006
11. CS 395 – QoS-enabled Middleware, Fall 2008
12. CS 396 – QoS-enabled Component Middleware, Spring 2005
13. CS 891 – Introduction to Concurrent and Parallel Java Programming with Android, Fall 2017
14. CS 891 – Advanced Concurrent Java Programming in Android, Spring 2018
15. CS 891 – Introduction to Parallel Java Programming, Fall 2018
16. CS 892 – Concurrent Java Programming in Android, Spring 2017

Courses at Coursera

1. Android App Development (Android for Java; Android App Components - Intents, Activities, and Broadcast Receivers; Android App Components - Services, Local IPC, and Content Providers), 2016 to present
2. Mobile Cloud Computing with Android (Pattern-Oriented Software Architecture: Communication; Pattern-Oriented Software Architecture: Concurrency), 2014 to 2016
3. Pattern-Oriented Software Architectures for Concurrent and Networked Software, 2013

Courses at University of California, Irvine

1. ECE 011 – Computational Methods in ECE, Winter 2000
2. ECE 255 – Distributed Software Architecture Design, Spring 2000
3. ICS 142 – Compiler Theory, Summer 1989
4. ICS 23 – Data Structures, Summer 1988

Courses at Washington University, St. Louis

1. CS 562 – Advanced Object-Oriented Software Development with Patterns and Frameworks, Spring 1999
2. CS 242 – Introduction to Software Design, Spring 1998
3. CS 673 – Distributed Systems research seminar, Fall 1997
4. CS 422 – Operating Systems Organization, Fall 1997
5. CS 242 – Introduction to Software Design, Spring 1997
6. CS 544 – Distributed System Design, Fall 1996
7. Ada tasking course for McDonnell Douglas, Fall 1996
8. OO design course for McDonnell Douglas, Spring 1996
9. CS 523 – Distributed Operating Systems Organization, Spring 1995
10. CS 242 – Introduction to Software Design, Fall 1995
11. CS 673 – Distributed Systems research seminar, Spring 1995
12. CS 422 – Operating Systems Organization, Fall 1994

Other Teaching Experience

In addition to the academic teaching experience above, I have also taught numerous short-courses and tutorials on object-oriented design patterns and programming techniques, UNIX and Windows NT systems programming and network programming, C++ and C programming languages, and various distributed/networked system, compiler construction, algorithm, data structure, mobile app, and web-based cloud computing courses for the following universities and professional organizations:

- O'Reilly Live-Training
- Pearson LiveLessons
- University Extension Program, University of California, Berkeley, CA
- University Extension Program, University of California, Irvine, CA
- University Extension Program, University of California, Los Angeles, CA

- Oregon Graduate Institute of Science and Technology, Beaverton, OR
- USENIX association
- Association of Computing Machinery (ACM)
- Addison-Wesley's Technology Exchange Program, Reading, MA
- SIGS Conferences
- Object Computing Institute, St. Louis, MO
- National University, Irvine, CA

Department/School/Community Service

Service at Vanderbilt University

1. Faculty advisor for the "DataBrains" AI and Data Science student club.
2. Faculty advisor for the "Vandy Apps" student club.
3. Faculty advisor for the "BizTech" student club.
4. Led the effort to create an online Professional Masters in CS
5. Led the effort to create a continuing education program in Web Development
6. Interview panel for the Director of Professional Programs in VUSE
7. Served on the Digital Literacy committee
8. Chair of two year review committee for Taylor Johnson
9. Chair of the CS search committee in 2003, 2005, 2013, 2016, 2018
10. Chair of the committee on Big Data for the VUSE Strategic Plan
11. Member of the Provost's Special Task Force of the Data Science Visions Working Group: Trans-institutional Masters in Data Science.
12. Member of the Provost's Data Science Visions working group
13. VUSE representative for the Research IT committee
14. VUSE representative on the Provost's Digital Literacy committee
15. Reviewer for University Course proposals
16. Faculty mentor for "Accenture Garage Program"
17. VUSE representative for the Research IT committee.
18. Member of the search committee for the first Director of the Innovation Center
19. Member of the Provost's Study Group on Cross College Teaching
20. Member of the Advisory Committee for the Vanderbilt Institute for Digital Learning (VIDL)
21. Chair of the Provost's Committee on the Innovation Center
22. Member of the VUSE Career Committee
23. VUSE point of contact for VUIT
24. Committee member for Eugene Vorobeychik's promotion case to associate professor
25. Committee member for Bobby Bodenheimer's promotion case to full professor
26. Committee member for Julie Adams's promotion case to full professor
27. Committee member for Akos Ledeczi's promotion case to full professor
28. Chair of the tenure committee for Yuan Xue
29. Chair of the four year review committee for Yuan Xue
30. Member of the two year committee for Yuan Xue
31. Member of the promotion committee for Ted Bapty
32. Member of review committee for Xenofon Koutsoukos
33. Chair of promotion committee for Gabor Karsai

34. Member of promotion committee for Gautam Biswas
35. Chair of the VUSE Technology Entrepreneurship Task Force
36. Member of the VUIT faculty advisory committee
37. Owen-VUSE joint committee for 2014-2015
38. Chair of the Schmidt Family Annual Educational Technologies Lectureship
39. Member of the Provost's Study Group on Cross College Teaching
40. Chair of two year review committee for Eugene Vorobeychik
41. Member of the Chancellor's Social Media and the Internet committee
42. Member of the VU Online Education Task Force
43. Member of the ad hoc committee on EECS Industrial Advisory Board
44. Ex-officio member of the ad hoc committee on the CS graduate program
45. Ex-officio member of the ad hoc committee on the CS undergraduate program
46. Faculty facilitator for the Vanderbilt Visions program
47. Chair of the Information Technology committee for the Vanderbilt School of Engineering
48. Chair of the tenure committee for Bobby Bodenheimer
49. EECS Corporate/Internship Liaison for Computer Science and Engineering
50. Ex-officio Member of the Ad Hoc Committee on Computer Engineering
51. Faculty sponsor of the new EECS Graduate Student Organization
52. Member of the VUSE Research Institutes and Centers Council
53. Associate Chair of Computer Science and Engineering
54. Member of the Vanderbilt University Faculty Senate
55. Chair of the faculty committee on Academic Computing and Information Technology (ACIT)
56. Member of the Research Advisory Committee on Information Technology (RACIT)
57. Chair of the Systems Engineering concentration committee
58. Member of the Plan Integration and Communication Group (PICG)
59. Member of the CS graduate curriculum committee

Service at Washington University, St. Louis

1. Member of the Faculty recruiting committee
2. Member of the CS committee on recruiting industrial graduate students (RIGS)
3. Member of the CS Experimental Infrastructure for Teaching and Research (CEITR)
4. Member of the Introductory course committee
5. Member of the Graduate admission committee
6. Member of the CS representative to the CEC advisory board
7. Member of CS departmental chair search committee

Awards and Honors

1. Received the Cornelius Vanderbilt Professor of Engineering endowed chair in February 2017.
2. Received the 2015 Award for Excellence in Teaching by the Vanderbilt University School of Engineering.
3. Interviewed for Software Engineering Radio (www.se-radio.net/).
4. Vice-chair of the IEEE Chapter in middle Tennessee.
5. Elected to three year term as member of the Vanderbilt University Faculty Senate.

6. Invited speaker at the dedication of the Henry Samueli School of Engineering, along with UC Irvine Chancellor, Ralph Cicerone; Dean of the School of Engineering, Nicolaos Alexopoulos; Chairperson of the Regents of the University of California, S. Sue Johnson; President of the University of California, Dick Atkinson; and CTO and co-founder of Broadcom Henry Samueli.
7. Interviewed for Dr. Dobb's journal TechNetCast, October 24, 2000.
8. Interviewed for **iX** magazine, October, 2000.
9. Received early promotion to tenure as an Associated Professor at Washington University, St. Louis, five years after joining the faculty as an Assistant Professor in 1994.
10. Director of the "Center for Distributed Object Computing" at Washington University, St. Louis since spring of 1999.
11. Listed in Marquis' "Who's Who in Media and Communications," 1997.
12. Received joint appointment to the Mallinckrodt Institute Department of Radiology, Washington University School of Medicine, February 1996.
13. Selected to participate in the ACM OOPSLA '94 Doctoral Symposium.
14. Invited by Dr. Martina Zitterbart to participate in a 4-week international exchange program at the Universität Karlsruhe Institut für Telematik in Karlsruhe, Germany, April 1993.
15. Served as elected representative to the Associated Graduate Student organization at the University of California, Irvine from May 1991 to June 1992.
16. Served as elected graduate student representative to the Computer Science Computing Resource Committee at the University of California, Irvine from August 1988 to August 1990.

Consulting Work

1. ARINC, Fountain Valley, CA
2. ACM, NY, NY
3. Advanced Institute of Information Technology, Seoul, Korea
4. AG Communication Systems, Phoenix, AZ
5. Anderson Consulting, Chicago, IL
6. Apple, Cupertino, CA
7. AT&T Research, Murray Hill, NJ
8. BAE Systems, Greenlawn, NY
9. BAE Systems, Wayne, NJ
10. BEA, San Jose, CA
11. Bellcore, Morristown, NJ
12. BellSouth, Atlanta, GA
13. Boeing, St. Louis, MO
14. Boies, Schiller, & Flexner, Santa Monica, CA
15. Bridges & Mavrakakis, Palo Alto, CA
16. Cooley LLP, San Francisco, CA
17. Correct Care Solutions, Nashville, TN
18. Credit Suisse, Zurich, Switzerland
19. Crosskeys, Ottawa, Canada
20. DARPA, Arlington, VA
21. Desmarais, NY, NY
22. Duane Morris, Atlanta, GA
23. Edward D. Jones, St. Louis, MO

24. Envision Inc. St. Louis, MO
25. Ericsson, Cypress, CA
26. Fitzpatrick, Cella, Harper & Scinto, NY, NY
27. GaN Corporation, Huntsville, AL
28. Gibson, Dunn, & Crutcher, NY, NY
29. Goldman, Ismail, Tomaselli, Brennan, & Baum, Chicago, IL
30. Jet Propulsion Lab, Pasadena, CA
31. Kasowitz, Benson, & Torres, Redwood Shores, CA
32. Keystone Strategy, Boston, MA
33. Kilpatrick Stockton, Atlanta, GA
34. Kirkland & Ellis, San Francisco, CA
35. Kodak Imaging, Rochester, NY
36. Laureate University, Baltimore, MD
37. Lockheed Martin Tactical Systems, Minneapolis, MN
38. Lockheed Martin Mission Systems, Boulder, CO
39. Lockheed Martin Advanced Technology Lab, Cherry Hill, NJ
40. Lucent Bell Labs, Naperville, IL
41. Lucent Bell Labs, Murray Hill, NJ
42. Lucent, Whippany, NJ
43. McDonnell Douglas, St. Louis, MO
44. Microsoft, Redmond, WA
45. Morrison & Foerster, Washington DC
46. Morgan Stanley, New York, NY
47. Motorola Cellular Infrastructure Group, Arlington Heights, IL
48. Motorola Iridium, Chandler, AZ
49. Motorola Land Mobile Products, Chicago, IL
50. National Security Agency, Ft. Meade, MD
51. Naval Air Weapons Stations, China Lake, CA
52. Nortel, Ottawa, Canada
53. Object Computing Institute, St. Louis, MO
54. Object Technologies International, Ottawa, CA
55. Odetics Broadcasting, Anaheim, CA
56. Oracle, Redwood Shores, CA
57. Park, Vaughan, & Fleming, Boise, ID
58. Pearson Education, London, UK
59. Pragmatus, Alexandria VA
60. PrismTechnologies, Newcastle, UK
61. Qualcomm, San Diego, CA
62. Quinn Emanuel, NY, NY
63. Raytheon, San Diego, CA
64. Reichman Jorgensen, CA
65. Riverace, Boston, MA
66. Rubin Anders Scientific, Boston, MA
67. SAIC, Washington D.C.

68. Schwegman, Lundbert, & Woessner, Minneapolis, MN
69. Siemens Medical Engineering, Erlangen, Germany
70. Siemens Corporate Research, Princeton, NJ
71. SIGS, New York, NY
72. Software Engineering Institute, Pittsburgh, PA
73. Teradyne, Chicago, IL
74. Teledyne, Thousand Oaks, CA
75. UC Berkeley Extension, Palo Alto, CA
76. UCLA Extension, Los Angeles, CA
77. USENIX, Lake Forest, CA
78. Venable, NY, NY
79. Wong, Cabello, Lutsch, Rutherford & Brucculeri, Houston, TX
80. WMS Gaming, Chicago, IL
81. Zircon Computing, Wayne, NJ

Expert Testimony in the Past Five Years

1. March 2016, Deposed in support of Oracle in the Oracle vs. Google Fair Use trial in the United States District Court for the Northern District of California, San Francisco division. Case No. Civ. A. No. 10-03561 WHA.

2. May 2016, Testified in support of Oracle in the Oracle vs. Google Fair Use trial in the United States District Court for the Northern District of California, San Francisco division. Case No. Civ. A. No. 10-03561 WHA.

3. February 2017, Deposed in support of IBM in the IBM vs. Priceline Group case. Case No. Civ. A. N. 15-cv-137-LPS-CJB.

4. February 2018, Deposed in support of IBM in the IBM vs. Groupon case. Case No. Civ A. N. 16-122-LPS-CJB.

5. July 2018, Testified in support of IBM in the IBM vs. Groupon case. Case No. Civ A. N. 16-122-LPS-CJB.

6. August 2018, Deposed in support of Palo Alto Networks in the Palo Alto Networks vs. Implicit case. Case No. Civ 6:17-CV-182-JRG.

7. January 2019, Deposed in support of C3IoT in the E2.0 vs. C3IoT case. Case No. 1:15-cv-00530-GMS.

8. February 2019, Testified in support of C3IoT in the E2.0 vs. C3IoT case. Case No. 1:15-cv-00530-GMS.

9. June 2019, Deposed in support of IBM in the IBM vs. Expedia Inc. case. Civil Action No. IPR2018-01136.

10. July 2019, Deposed in support of Philips in the Philips vs. Microsoft case. Civil Action No. 4:18-cv-01885-HSG.

11. August 2019, Deposed in support of Philips in the Philips vs. HTC case. Civil Action No. 4:18-cv-01885-HSG.

12. August 2019, Deposed in support of Philips in the Philips vs. ASUS case. Civil Action No. 4:18-cv-01885-HSG.

13. September 2019, Deposed in support of Kroy in the Kroy vs. Groupon case. Civil Action No. IPR2019-00044.

14. September 2019, Deposed in support of Kroy in the Kroy vs. Groupon case. Civil Action No. IPR2019-00061.
15. March 2020, Deposed in support of Cisco in the Centriptal vs. Cisco case. Civil Action No. 2:18-cv-00094-HCM-LRL.
16. May 2020, Testified in support of Cisco in the Centriptal vs. Cisco case. Civil Action No. 2:18-cv-00094-HCM-LRL.
17. Jan 2021, Deposed in support of Droplets in the Droplets vs. Yahoo case. Civil Action No. 12-CV-03733-JST.
18. Jan 2021, Deposed in support of Droplets in the Droplets vs. Nordstrom case. Civil Action No. 12-CV-04049.

Summary of Research Contributions

At Vanderbilt University I direct the Distributed Object Computing (DOC) Group at the Institute for Software Integrated Systems (ISIS), which is one of the leading research groups in the world on middleware platforms and MDE tools for DRE systems and mobile cloud computing platforms. Over the past several decades I have conducted and managed research projects on a range of topics, including patterns, optimization techniques, and empirical analyses of software frameworks that facilitate the development of quality of service (QoS)-enabled middleware and model-driven engineering (MDE) techniques/tools for distributed real-time and embedded (DRE) systems and mobile cloud computing apps running over wired/wireless networks and embedded system interconnects. The research methodology throughout my career has involved:

- *Creating* innovative middleware and MDE technologies technologies, such as design formalisms, QoS specification/enforcement techniques, end-to-end and cross-layer middleware optimizations, and automated tools for specifying, analyzing, and synthesizing dependable DRE software from higher-level domain-specific models.
- *Applying* these technologies in conjunction with colleagues in academia and industry to demonstrate and mature middleware and MDE technologies and tools in the context of production mission-critical DRE systems.
- *Amplifying* the adoption and transition of these technologies in both academia and industry via 625+ technical papers, 575+ tutorials and invited talks, millions of lines of popular open-source software, and scores of innovative face-to-face and online courses published and delivered to more than 300,000 students around the world.

The R&D efforts I have led have had a significant impact on academic research and commercial practice. For example, dozens of universities throughout the world use the middleware and MDE tools my DOC Group has developed as the basis for their research and teaching efforts. Moreover, the open-source middleware frameworks and MDE tools generated from projects I've led constitute some of the most successful examples of software R&D ever transitioned from research to industry, being widely used by thousands of companies and agencies worldwide in many domains for three decades. For example, the ACE and TAO middleware frameworks developed by the DOC Group are used by developers in thousands of companies (such as Boeing, Cisco, Ericsson, Kodak, Lockheed Martin, Lucent, Motorola, NASA/JPL, Nokia, Nortel, Raytheon, SAIC, Siemens, Sprint, and Telcordia) in a wide range of domains (such as telecom/datacom, healthcare, process automation, avionics, homeland security and defense, financial services, online gaming, social media, and distributed interactive simulation).

Teaching Contributions and Impact

I have taught scores of cutting-edge courses on topics relating to object-oriented design and programming, software patterns, middleware for distributed real-time and embedded systems, concurrent and networked programming with C++ and Java, and mobile cloud computing with Android. I received the 2015 Award for Excellence in Teaching by the Vanderbilt University School of Engineering. In addition, I've taught 10 popular MOOCs at Vanderbilt on topics related to pattern-oriented mobile cloud computing with Android to over 200,000 learners from around the world.

I recently created and co-taught one of the first cross-college University Courses at Vanderbilt on "Tackling Big Problems with Mobile Cloud Computing," where ten highly diverse teams consisting of 11 arts and science students and 44 computer science students were mentored by 11 faculty from the College of Arts and Sciences, the School of Nursing, the School of Law, the School of Medicine, the School of Engineering and Vanderbilt University Medical Center. The projects in this course addressed relevant, real-world problems involving mobile cloud computing technologies, including:

- Effectively engaging young people with chronic diseases and medical conditions, such as diabetes, asthma and obesity
- Creating "smarter" cities and sustainable energy platforms via an app-based transportation hub for Nashville, and remotely monitoring the safety and operations of novel sources of power, including solar, wind and natural gas, and
- Helping economically disadvantaged individuals bridge the digital divide to obtain better guidance on medical and legal matters.

Summary of Career Accomplishments

My career accomplishments include the following:

Publications and presentations. I have published over 650 works (125 journal papers, 195 conference papers, 5 books, 4 book-length reports, 3 edited book collections, 64 book chapters, 74 workshop papers, 13 short papers and posters, 75 trade magazine columns/articles, and 95 editorials and book forewords). My papers have appeared in the most selective journals (*e.g.*, ACM Transactions in Embedded Computing Systems, IEEE Transactions on Parallel and Distributed Systems, IEEE Transactions on Software Engineering, IEEE Transactions on Computing, IEEE Journal of Selected Areas of Communications, and ACM Transactions on Autonomous and Adaptive Systems) and conferences (*e.g.*, ACM SIGCOMM, ACM OOPSLA, IEEE INFOCOM, IEEE ICDCS, IEEE RTAS, ACM/IEEE Middleware, and the ACM/IEEE ICSE) in my field. I have also given 600+ invited lectures and tutorials world-wide.

Measures of scholarly impact. My publications have been cited 43,000+ times across a comprehensive spectrum of high-impact venues. My h-index is 85 and my i10 index is 404. These biometrics indicate the significant impact of my publications as a researcher in the field of Computing.

Funding. Since June 1995 I have been a PI or co-PI for grants, contracts, and gifts totaling more than $41 million dollars. I have been the sole PI for over $11.5 million dollars of this amount.

Graduate advising and training. During my academic career I have advised and graduated 18 doctoral students and over 25 masters students.

Professional service and leadership. I have engaged in the following professional service and leadership capacities during my career:

- Served as guest editor of 12 ACM, IEEE, and USENIX journals, and served as editor-in-chief of the C++ Report magazine.
- Served as general chair or program (co)-chair for 35 conferences, tutorial chair for 4 conferences, co-organized 14 workshops, and served on the program committees for over 245 ACM, IEEE, IFIP, USENIX, and OMG conferences.
- From 2013 to 2015 I served on the Advisory Board for the joint US Navy/Army Future Airborne Capability Environment (FACE).
- From 2013 to 2015 I served as co-lead of a task area on "Published Open Interfaces and Standards" for the US Navy's Open Systems Architecture initiative.
- From 2010 to 2014 I served a member of the Air Force Scientific Advisory Board, where I was the Vice Chair of a study on Cyber Situational Awareness for Air Force mission operations.
- From 2006 to 2011 I served as the Chief Technology Officer for the Software Engineering Institute at Carnegie Mellon University (2010 to 2011), Zircon Computing (2009 to 2010), and Prism Technologies (2006-2008), where I was responsible for directing the technical vision and strategic R&D investments.
- From 2000 to 2003 I served as a Program Manager at the DARPA Information Technology Office (ITO) and Information eXploitation Office (IXO) the Deputy Director for DARPA ITO, where I lead the national R&D effort on QoS-enabled middleware for DRE systems.

- From 2001 to 2003 I served as Co-chair for the Software Design and Productivity (SDP) Coordinating Group, which formulates the multi-agency research agenda in fundamental software design for the Federal government's Information Technology Research and Development (IT R&D) Program, which is the collaborative IT research effort of the major Federal science and technology agencies.

University service and leadership. I have engaged in the following service and leadership capacities at Vanderbilt University during the past two decades:

- **Associate Provost of Research**. I became the Associate Provost for Research at Vanderbilt University in July of 2018. In this capacity I am responsible for developing cohesive and sustainable information technology (IT) services to advance research and scholarship across Vanderbilt's ten schools and colleges, including scalable and secure storage, processing, and communication solutions; big data research cores and corerelated services, and NIST 800-171 compliant IT services. I am also responsible for overseeing Vanderbilt's new "liquid workforce" service that provides researchers with on-demand access to shared technology expertise to help them develop research IT solutions, especially with data-intensive workflows, while also enabling shared software developers to add value to multiple research programs throughout the university.
- **Data Sciences Initiatives**. I am deeply involved in Vanderbilt's initiatives on Data Science. Starting in August 2018, I became a founding Co-Director of the Data Science Institute at Vanderbilt. During the past year I also chaired the ad hoc committee on Big Data for the Vanderbilt University School of Engineering (VUSE) strategic planning process, as well as served on the Provost's Special Task Force on a trans-institutional Masters in Data Science and the Provost's Working Group on Data Science Visions, which sets the direction for trans-institutional Data Science research. I also created and led a presentation on "Big Data" for the Vanderbilt University Board of Trust in the spring of 2017 that helped initiate Vanderbilt's investment in the Data Science Institute.
- **Cross-College Teaching**. I am a leader in Vanderbilt University's forays into Cross-College teaching. For example, I served as a member of the Provost's Study Group on Cross College Teaching, which formulated the concept of "University Courses" that brings faculty together from multiple schools to actively engage students of diverse backgrounds and promote new and creative trans-institutional learning. I also created/taught one of the first University Courses on "Tackling Big Problems with Mobile Cloud Computing." Each semester since the fall of 2016 I've taught this course in a multidisciplinary environment where undergraduate and graduate students from multiple schools team with computer science students to address big questions, such as how mobile cloud computing technologies can engage young people with chronic diseases; change political discourse in the United States and around the world; and help economically disadvantaged individuals bridge the digital divide to obtain better guidance on nutrition and legal matters. I also spearheaded the effort to create a CS 1000 course on "the beauty and joy of computing" that is intended for non-CS majors at Vanderbilt University.
- **Digital Learning**. I play a significant role in Vanderbilt's digital learning initiatives, including teaching (1) the first Massive Open Online Course (MOOC) at Vanderbilt in 2013 on "Pattern-Oriented Software Architecture for Concurrent and Networked Systems," (2) the first trans-institutional MOOC Specialization (together with the University of Maryland, College Park) in 2014 on "Mobile Cloud Computing with Android," (3) a Coursera Specialization on "Android App Development" since the spring of 2016, and (4) the forthcoming online Computer Science professional master's degree being created in conjunction with 2U. I have also played a key role in formulating the Vanderbilt digital learning strategy as a member of the Advisory Committee for the Vanderbilt Institute for Digital Learning (VIDL), a member of the Vanderbilt Online Education Task Force, a member of the Chancellor's Social Media and the Internet committee, chair of the Schmidt Family Annual Educational Technologies Lectureship, and a member of the Provost's committee on Digital Literacy whose charter is to ensure that all Vanderbilt students learn computational thinking in their undergraduate experience.
- **Technology Entrepreneurship**. I have been highly engaged in entrepreneurship leadership at Vanderbilt over the past five years. In particular, I chaired the VUSE Technology Entrepreneurship Task Force and the Provost's Committee on the Vanderbilt Innovation Center, known as the Wond'ry (I also served as a member of the search committee for the first Director of the Wond'ry Innovation Center). I am one of the inaugural faculty mentors for the "Garage Program at the Wond'ry, where I mentor multi-disciplinary teams of undergraduate and graduate students to help

companies (such as Accenture and RGP) establish new lines of business, e.g., liquid workforce services for the oil and gas domain, supply chain risk management using blockchain technologies, etc. I also serve as the faculty advisor for the VandyApp, DataBrains, and BizTech student organizations, which teach software development skills, prepare students for technical job interviews, and foster a welcoming and diverse environment for high-tech entrepreneurship collaboration across campus.

- **EECS Department Leadership**. I served as the Associate Chair of the Electrical Engineering and Computer Science (EECS) department at Vanderbilt University from 2004 to July 2018. In this capacity I worked with the EECS Chair to provide intellectual leadership and assist in EE, CS, and CompE faculty hiring, curricular development, and course staffing. I also represented Vanderbilt at the bi-annual CRA "CS Chairs" meeting at Snowbird Utah since 2008. In the past several years I focused on innovative digital learning techniques (such as pre-recording material and/or recording lectures in class so students can listen/watch to them at their leisure to ensure they master the course material) to handle the surge in undergraduate CS enrollment without adversely affecting Vanderbilt's commitment to high quality education. I also spearheaded several initiatives to create a continuing education program focused on web development in partnership with Trilogy Education Services and a professional masters degree program in CS in conjunction with 2U.
- **Information Technology Infrastructure for Research**. Over the past two decades I've played a leadership role in the Vanderbilt University Information Technology (VUIT) planning and governance processes. In addition to my latest role as the Associate Provost for Research, I've also chaired the faculty committee on Academic Computing and Information Technology (ACIT), served as the VUSE point of contact for VUIT, the VUSE representative for the Research IT committee as a member of the VUIT faculty advisory committee, as well as served as a member of the Research Advisory Committee on Information Technology (RACIT), and a member of the Provost's Research IT Special Project Working Group, which focuses on supporting the research needs of all schools at Vanderbilt.