US008126722B2

(12) **United States Patent**
Robb et al.

(10) **Patent No.: US 8,126,722 B2**
(45) **Date of Patent: Feb. 28, 2012**

(54) **APPLICATION INFRASTRUCTURE PLATFORM (AIP)**

(75) Inventors: **Terence Alan Robb**, Colorado Springs, CO (US); **James Louis Standlee**, Woodland Park, CO (US); **Anne Elizabeth Bevis**, Monument, CO (US); **Amanda Jo Williams**, Colorado Springs, CO (US); **Michael Nash Haase**, Woodland Park, CO (US); **Barbara L. Hall**, Palmer Lake, CO (US); **Ralph Samuel Hoefelmeyer**, Colorado Springs, CO (US); **Theresa Eilcen Phillips**, Fairfax, VA (US)

(73) Assignee: **Verizon Business Global LLC**, Basking Ridge, NJ (US)

(*) Notice: Subject to any disclaimer, the term of this patent is extended or adjusted under 35 U.S.C. 154(b) by 2319 days.

(21) Appl. No.: **10/127,726**

(22) Filed: **Apr. 23, 2002**

(65) **Prior Publication Data**

US 2003/0120502 A1 Jun. 26, 2003

Related U.S. Application Data

(60) Provisional application No. 60/341,222, filed on Dec. 20, 2001.

(51) **Int. Cl.**
G06Q 10/00 (2006.01)
G06Q 30/00 (2006.01)

(52) **U.S. Cl.** **705/1.1**; 705/26.1

(58) **Field of Classification Search** 705/1, 26, 705/1.1, 26.1
See application file for complete search history.

(56) **References Cited**

U.S. PATENT DOCUMENTS

6,816,905	B1 *	11/2004	Sheets et al.	709/226
6,904,449	B1 *	6/2005	Quinones	709/203
7,139,728	B2 *	11/2006	Rigole	705/26
7,184,977	B1 *	2/2007	Crim et al.	705/34
2002/0143906	A1 *	10/2002	Tormasov et al.	709/220
2004/0193694	A1 *	9/2004	Salo et al.	709/216

OTHER PUBLICATIONS

Information on Excel Communication, 1996-2000, archived web pages of www.excel.com printed through www.archive.org.*
Information on Excel Communicatin, 1996-2000, printed through www.archive.org.*

* cited by examiner

Primary Examiner — Naresh Vig

(57) **ABSTRACT**

Disclosed is an application infrastructure platform (AIP) having an application service provider (ASP) environment including multiple ASP systems providing application services to customers, and a common services environment including hardware and software and management systems providing to the ASP systems applications and integrated application, back-office, and management services used by the ASP systems in delivering their application services to their customers. In another aspect, the AIP is associated with a development and test bed environment which conducts product and service development and testing.

5 Claims, 33 Drawing Sheets

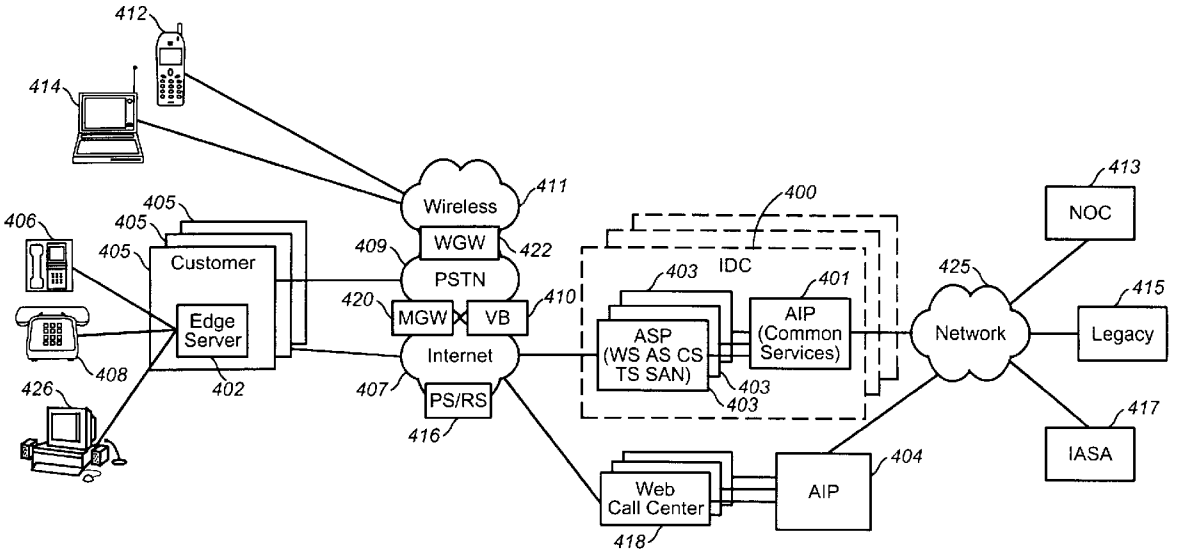

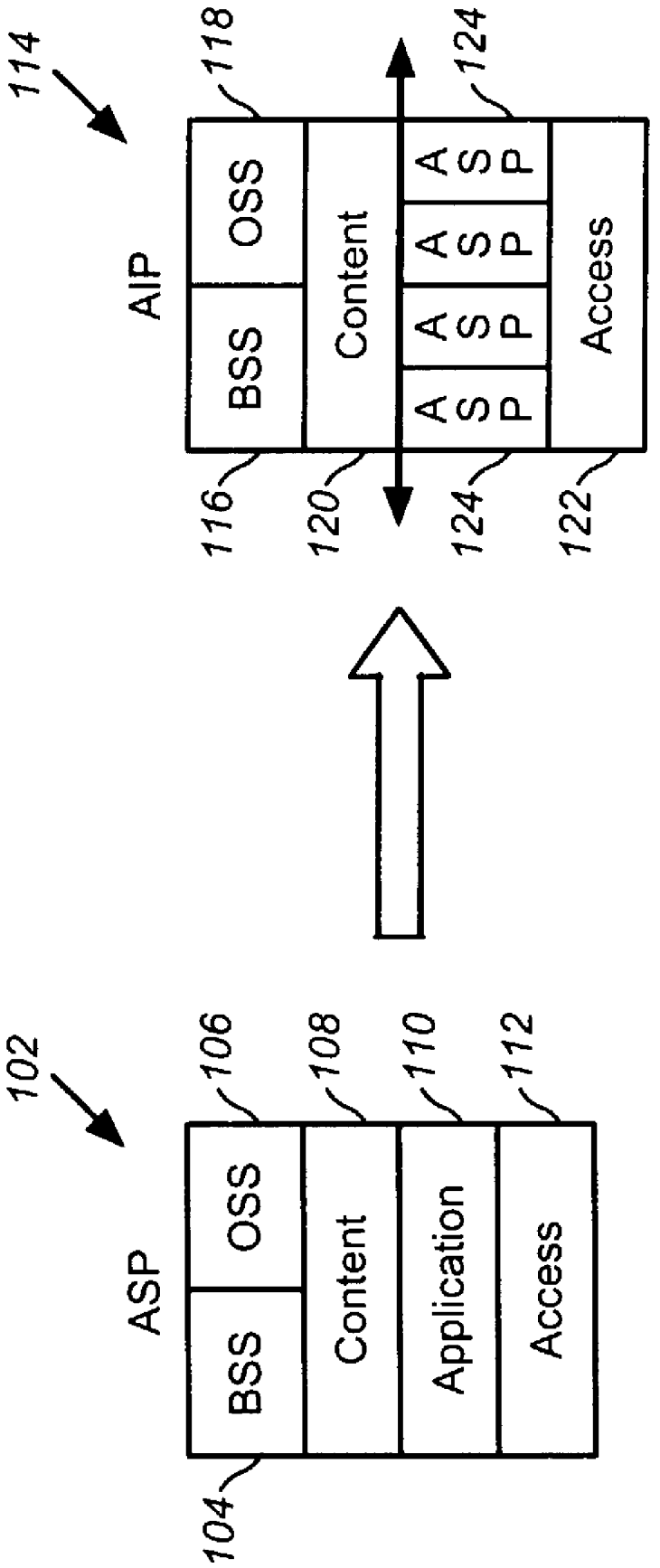
114
AIP
BSS
OSS
Content
ASP
ASP
ASP
Access
116
118
120
124
124
122
102
ASP
BSS
OSS
Content
Application
Access
104
106
108
110
112

FIG. 1

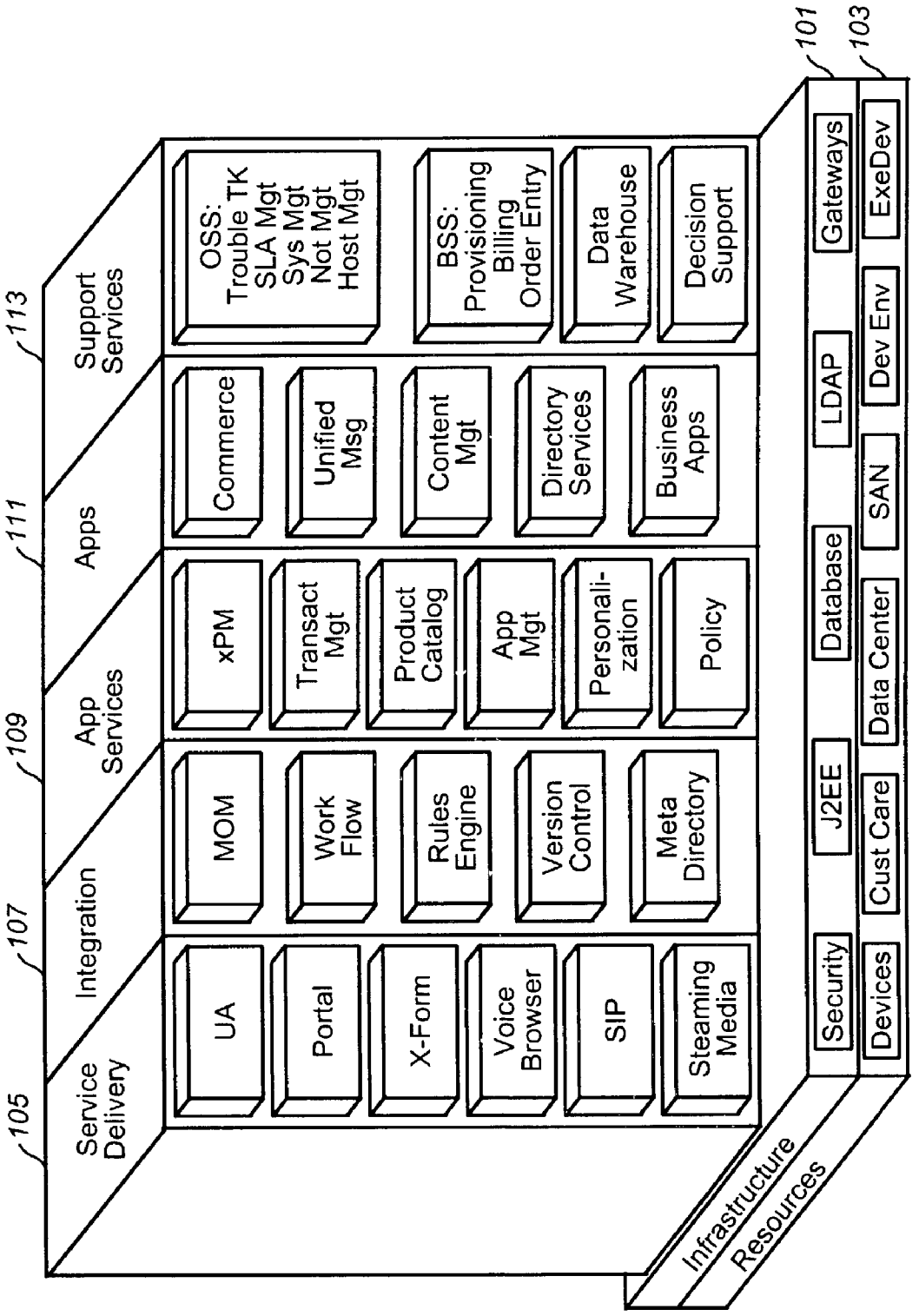
105
Service Delivery
107
Integration
109
App Services
111
Apps
113
Support Services
UA
Portal
X-Form
Voice Browser
SIP
Steaming Media
MOM
Work Flow
Rules Engine
Version Control
Meta Directory
xPM
Transact Mgt
Product Catalog
App Mgt
Personali-zation
Policy
Commerce
Unified Msg
Content Mgt
Directory Services
Business Apps
OSS: Trouble TK SLA Mgt Sys Mgt Not Mgt Host Mgt
BSS: Provisioning Billing Order Entry
Data Warehouse
Decision Support
101
103
Security
J2EE
Database
LDAP
Gateways
Devices
Cust Care
Data Center
SAN
Dev Env
ExeDev
Infrastructure
Resources

FIG. 2

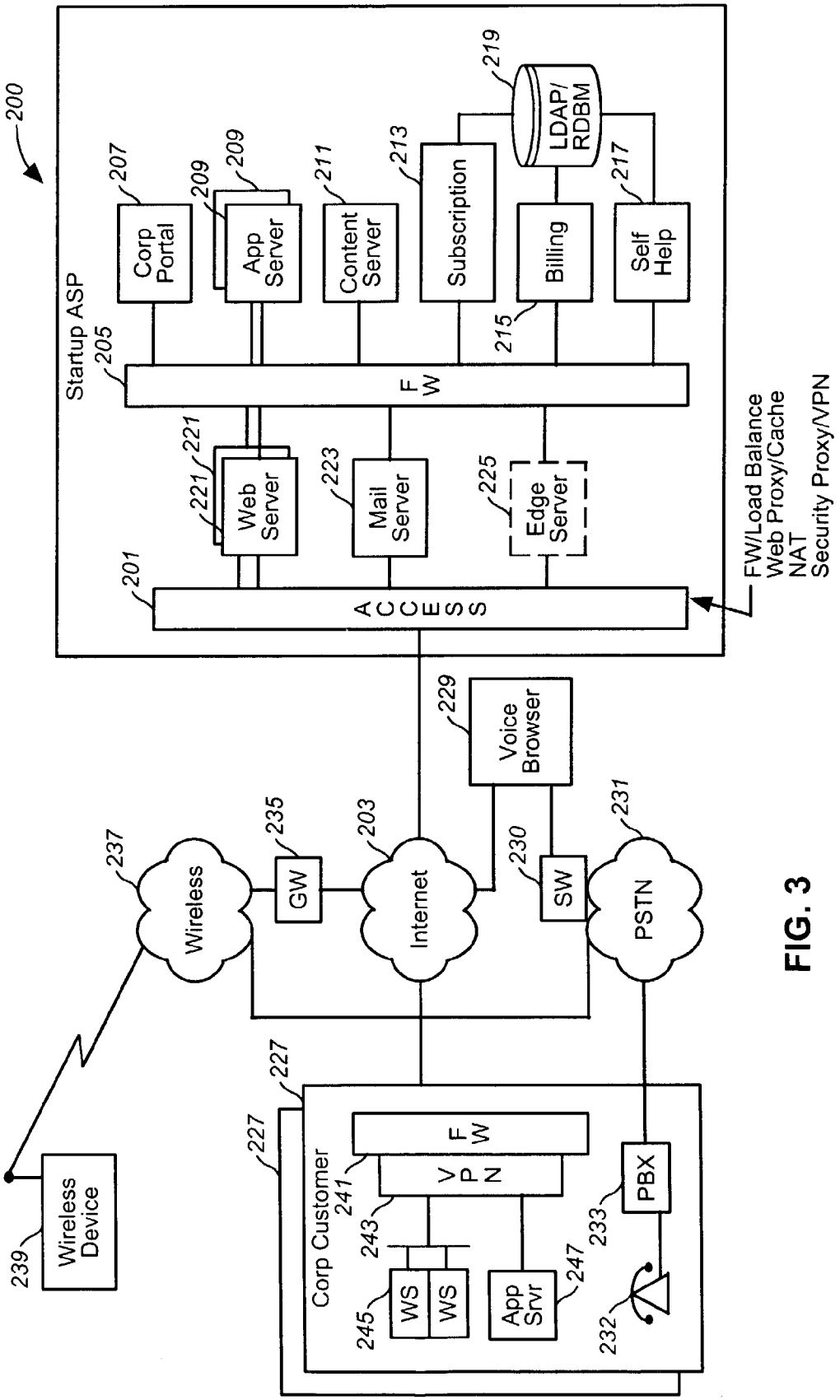
200
Startup ASP
205
207
Corp Portal
209
209
App Server
211
Content Server
213
Subscription
219
LDAP/ RDBM
217
Self Help
215
Billing
F W
221
221
Web Server
223
Mail Server
225
Edge Server
201
A C C E S S
FW/Load Balance
Web Proxy/Cache
NAT
Security Proxy/VPN
229
Voice Browser
237
Wireless
235
GW
203
Internet
230
SW
231
PSTN
239
Wireless Device
227
227
Corp Customer
241
F W
V P N
243
245
WS
WS
App Srvr
247
PBX
233
232

FIG. 3

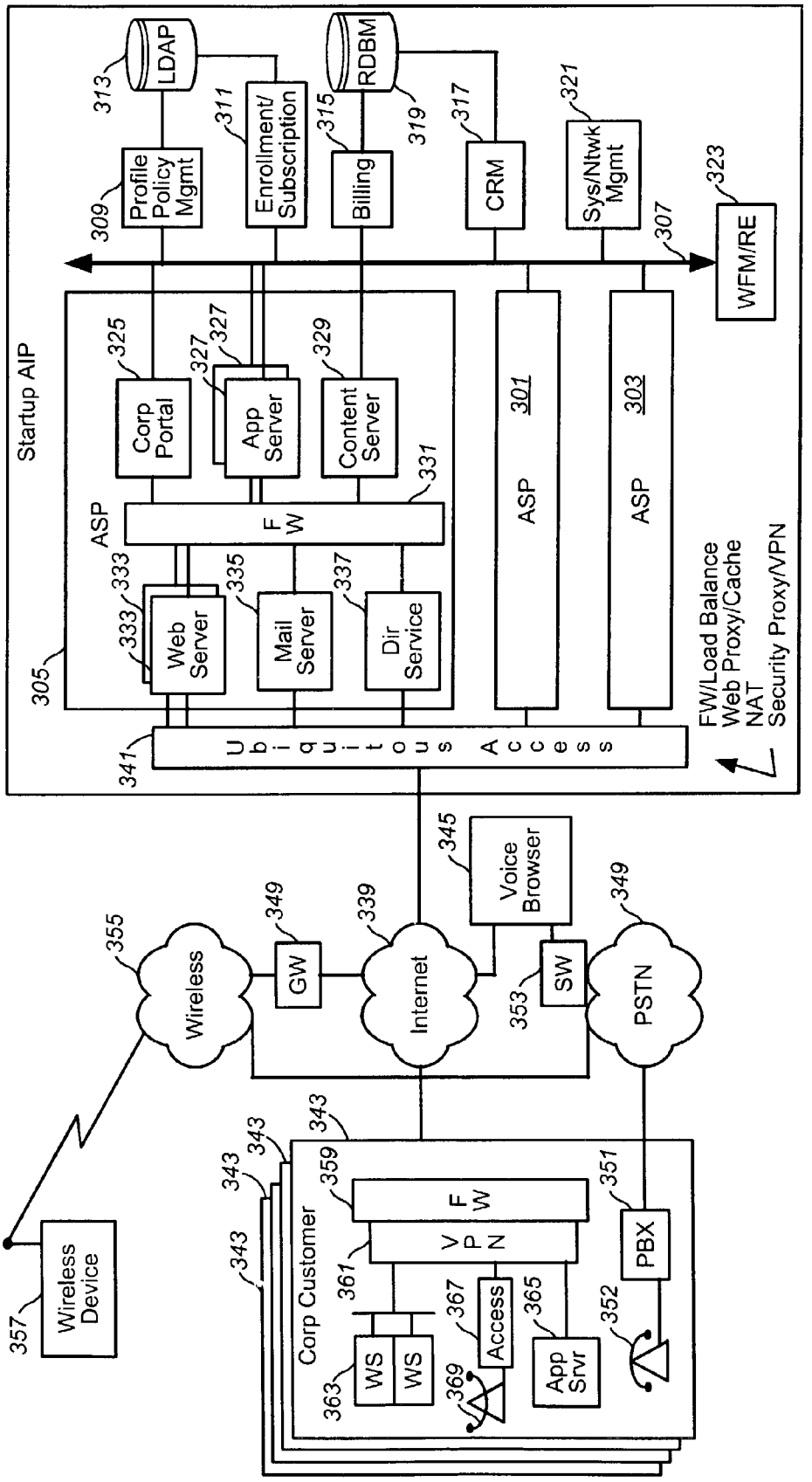
300
Startup AIP
LDAP
313
Profile Policy Mgmt
309
Enrollment/ Subscription
311
RDBM
315
Billing
319
CRM
317
Sys/Ntwk Mgmt
321
WFM/RE
323
307
Corp Portal
325
327
App Server
327
Content Server
329
ASP
F W
331
Web Server
333
333
Mail Server
335
Dir Service
337
305
ASP
301
ASP
303
Ubiquitous Access
341
FW/Load Balance
Web Proxy/Cache
NAT
Security Proxy/VPN
Voice Browser
345
Wireless
355
GW
349
Internet
339
SW
353
PSTN
349
Wireless Device
357
Corp Customer
343
343
343
343
F W
359
V P N
361
WS
363
WS
Access
367
369
App Srvr
365
PBX
351
352

FIG. 4

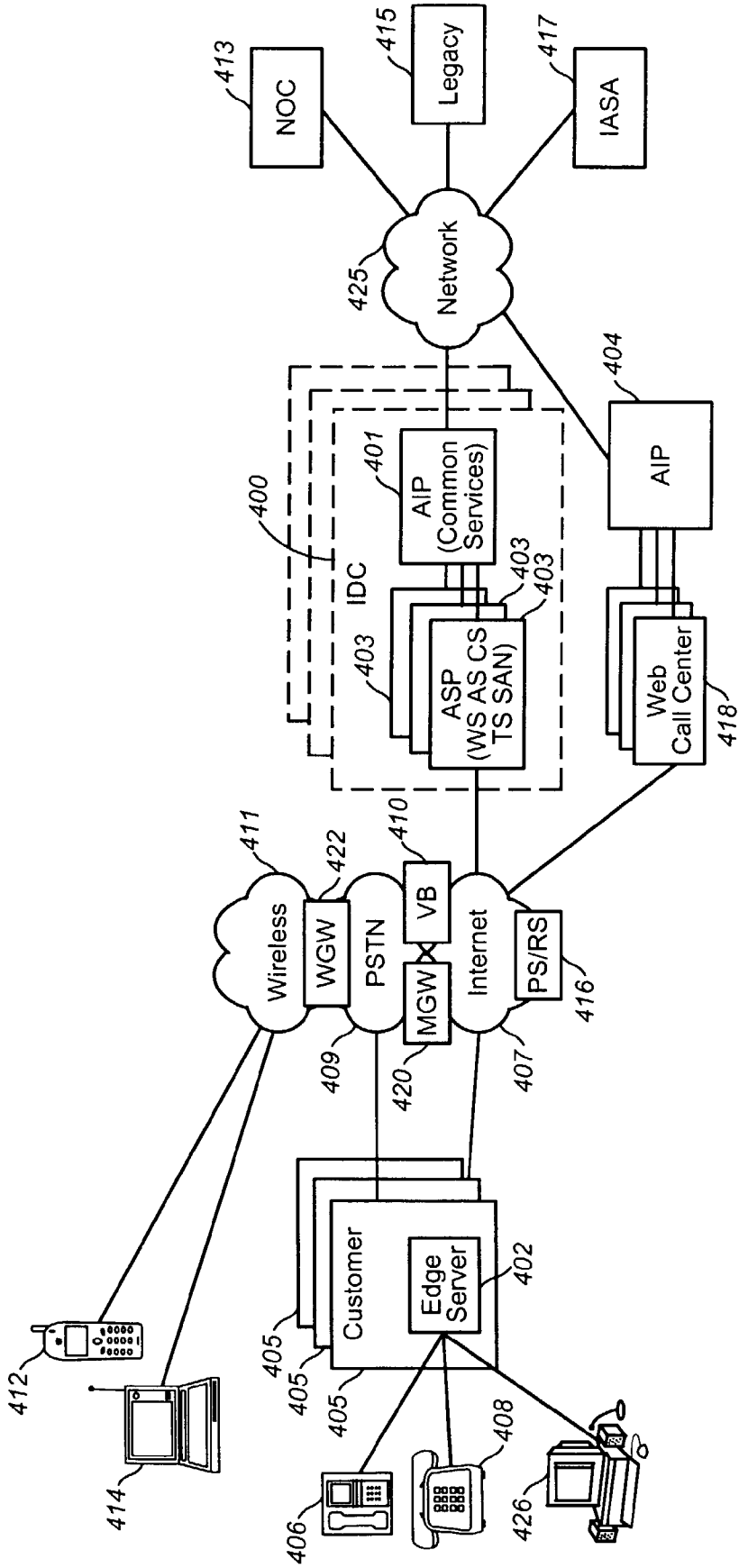
NOC
413
Legacy
415
IASA
417
Network
425
AIP
404
400
IDC
AIP (Common Services)
401
403
403
403
ASP (WS AS CS TS SAN)
Web Call Center
418
Wireless
411
WGW
422
PSTN
410
VB
MGW
Internet
PS/RS
416
409
420
407
Customer
Edge Server
402
405
405
405
412
414
406
408
426

FIG. 5

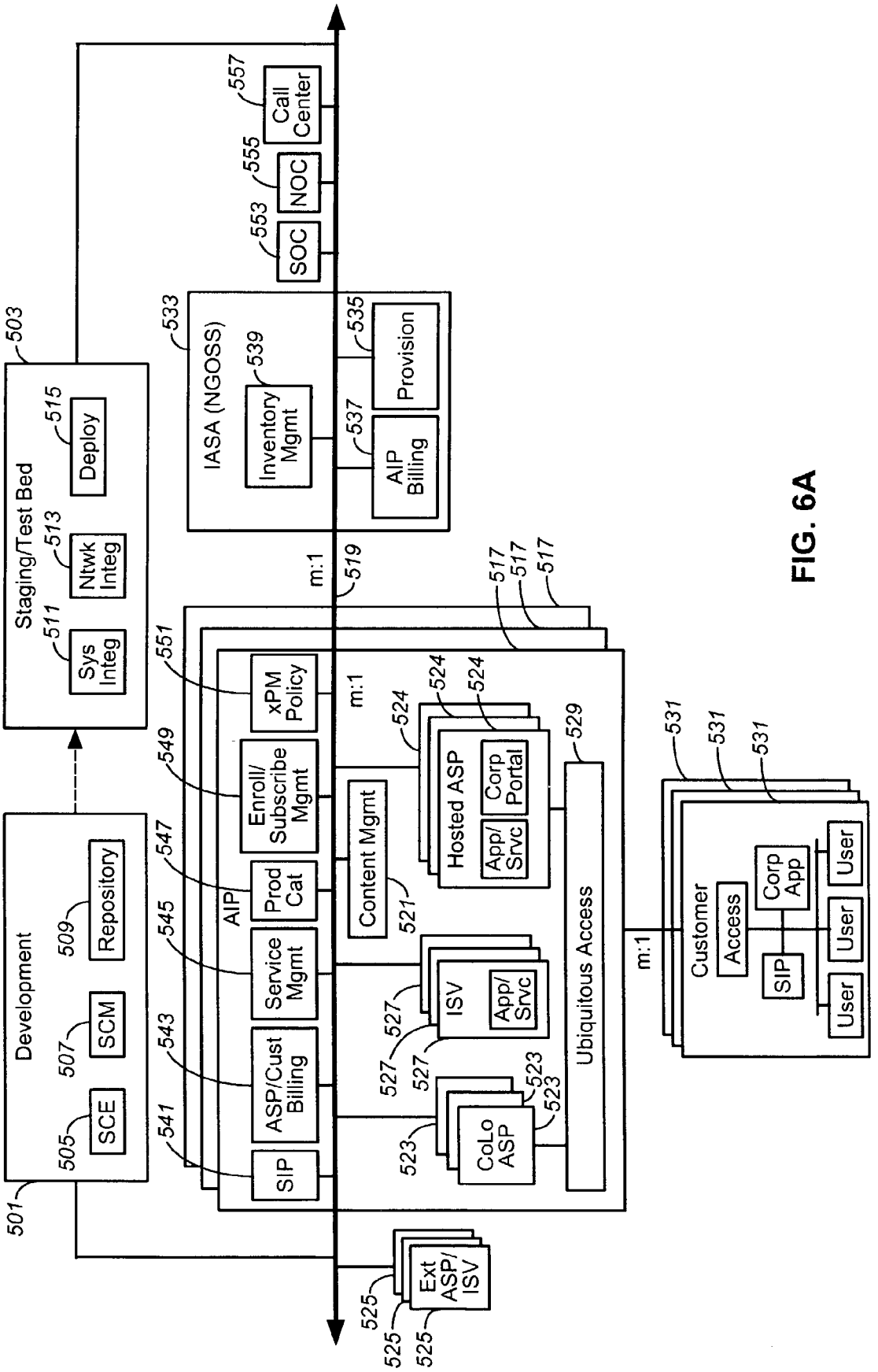
Development
SCE
SCM
Repository
Staging/Test Bed
Sys Integ
Ntwk Integ
Deploy
IASA (NGOSS)
Inventory Mgmt
Provision
AIP Billing
SOC
NOC
Call Center
AIP
SIP
ASP/Cust Billing
Service Mgmt
Prod Cat
Enroll/ Subscribe Mgmt
xPM Policy
Content Mgmt
Hosted ASP
App/ Srvc
Corp Portal
ISV
App/ Srvc
CoLo ASP
Ubiquitous Access
Customer
Access
SIP
Corp App
User
User
User
Ext ASP/ ISV
m:1
m:1
m:1
501
503
505
507
509
511
513
515
517
519
521
523
524
525
527
529
531
533
535
537
539
541
543
545
547
549
551
553
555
557

FIG. 6A

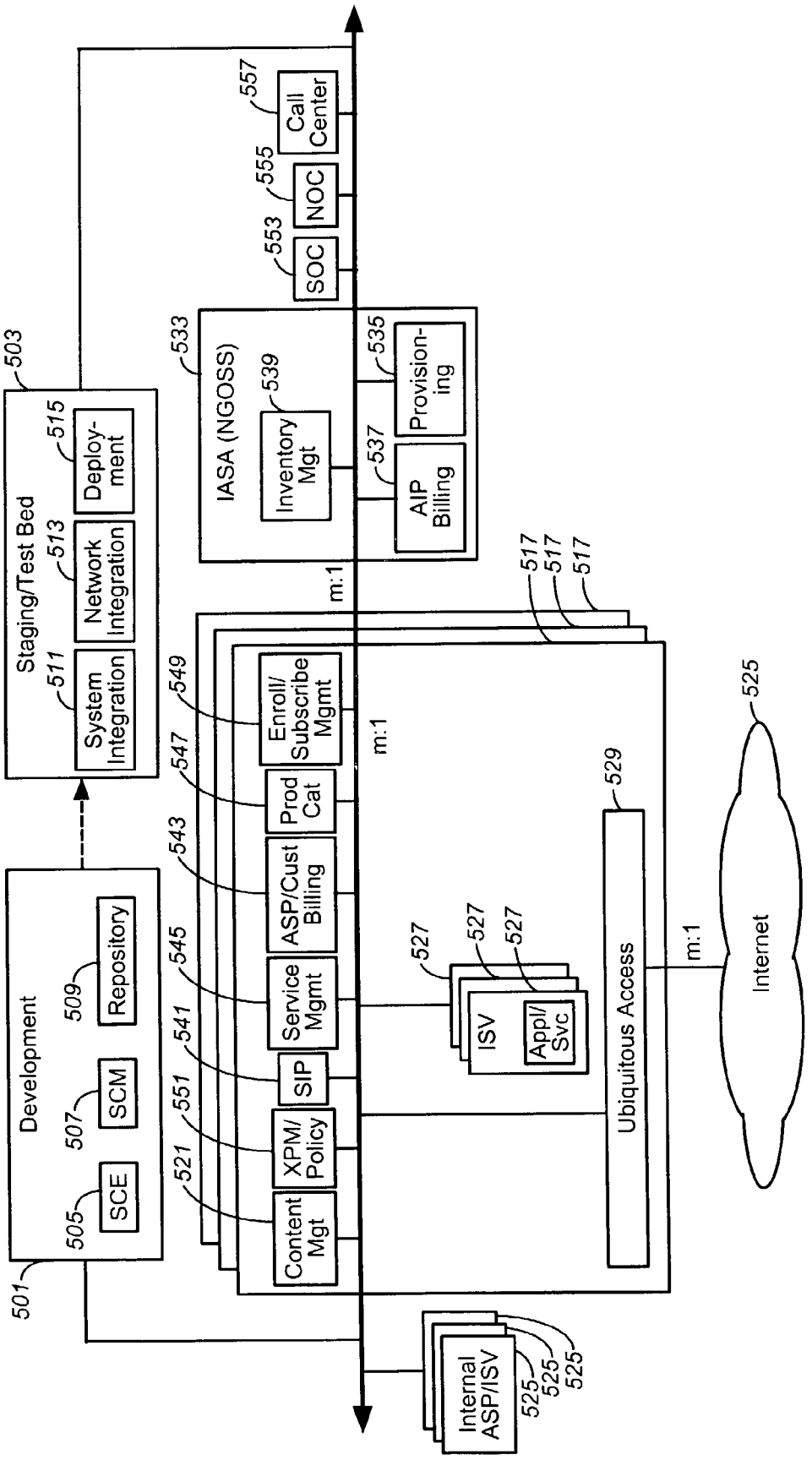
Development
SCE
SCM
Repository
Staging/Test Bed
System Integration
Network Integration
Deploy-ment
IASA (NGOSS)
Inventory Mgt
AIP Billing
Provision-ing
SOC
NOC
Call Center
Content Mgt
XPM/ Policy
SIP
Service Mgmt
ASP/Cust Billing
Prod Cat
Enroll/ Subscribe Mgmt
ISV
Appl/ Svc
Ubiquitous Access
Internet
Internal ASP/ISV
m:1
m:1
m:1
501
503
505
507
509
511
513
515
517
517
517
521
525
525
525
525
527
527
527
529
533
535
537
539
541
543
545
547
549
551
553
555
557

FIG. 6B

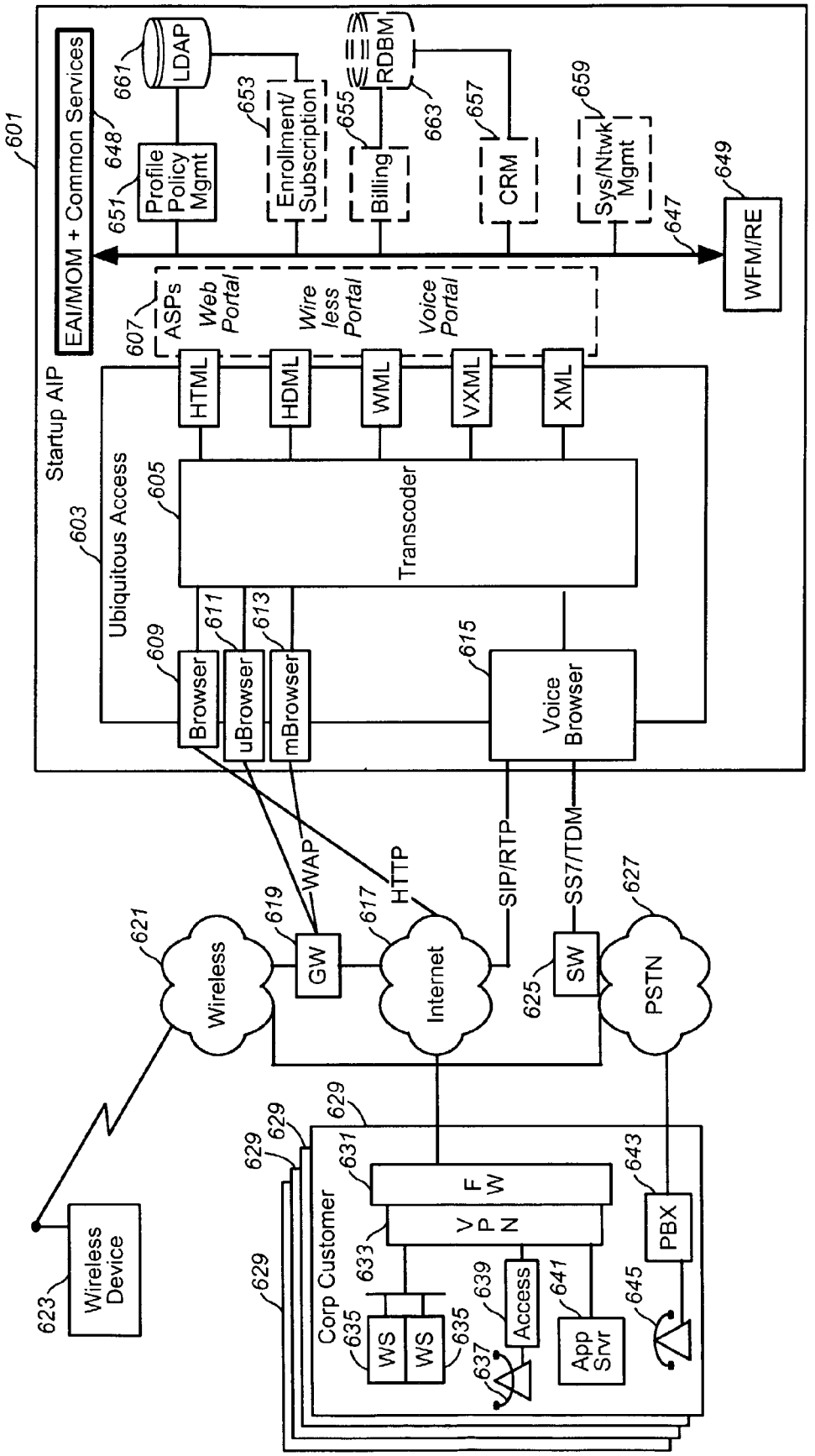
601
Startup AIP
EAI/MOM + Common Services
648
651
Profile Policy Mgmt
661
LDAP
653
Enrollment/ Subscription
655
Billing
663
RDBM
657
CRM
659
Sys/Ntwk Mgmt
647
649
WFM/RE
607
ASPs
Web Portal
Wire less Portal
Voice Portal
HTML
HDML
WML
VXML
XML
603
Ubiquitous Access
605
Transcoder
609
Browser
611
uBrowser
613
mBrowser
615
Voice Browser
WAP
HTTP
SIP/RTP
SS7/TDM
621
Wireless
619
GW
617
Internet
625
SW
627
PSTN
623
Wireless Device
629
Corp Customer
631
FW
633
VPN
635
WS
639
Access
637
641
App Srvr
643
PBX
645

FIG. 7

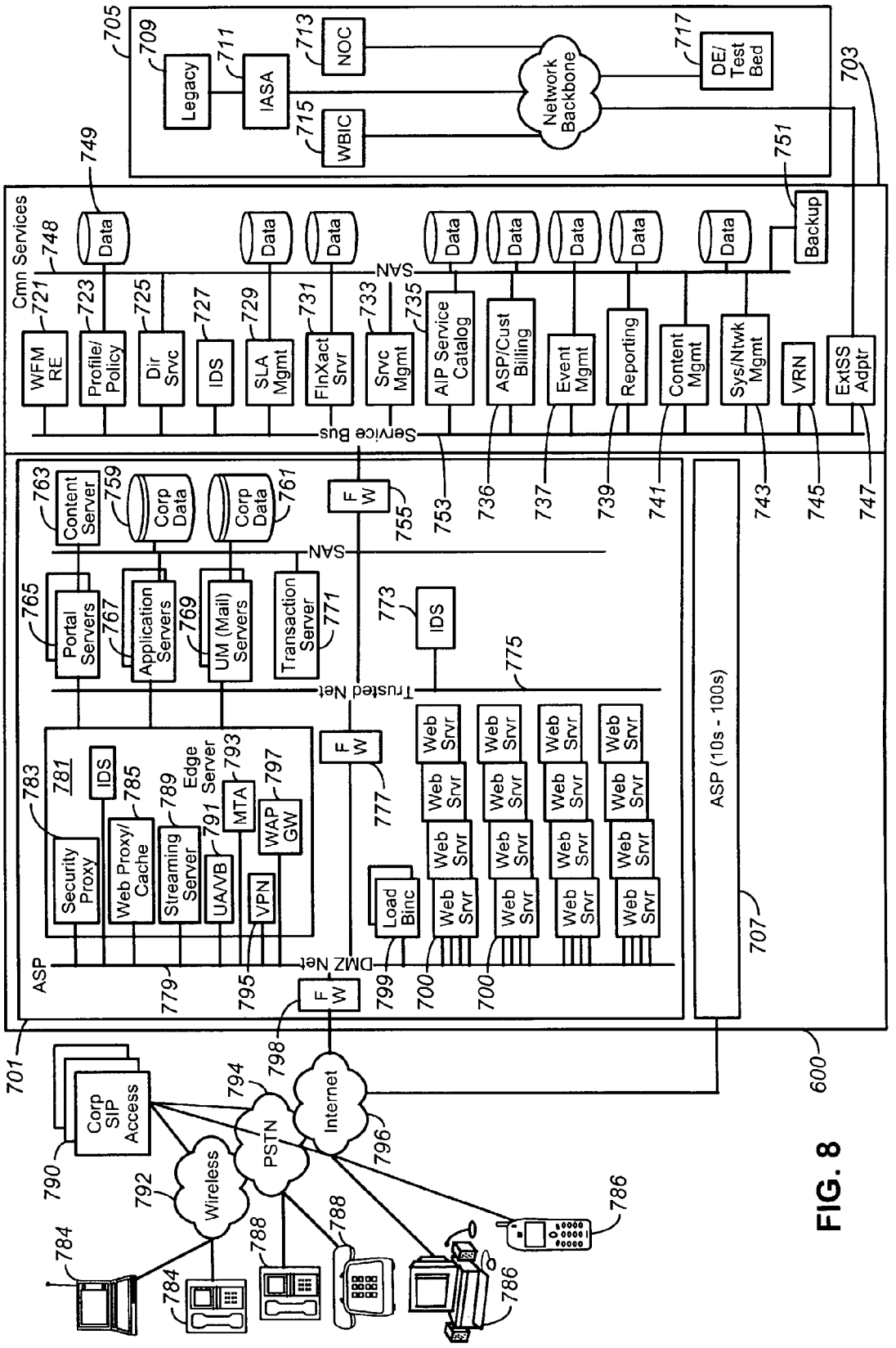
Legacy
IASA
NOC
WBIC
Network Backbone
DE/ Test Bed
Cmn Services
Data
Backup
SAN
WFM RE
Profile/ Policy
Dir Srvc
IDS
SLA Mgmt
FlnXact Srvr
Srvc Mgmt
AIP Service Catalog
ASP/Cust Billing
Event Mgmt
Reporting
Content Mgmt
Sys/Ntwk Mgmt
VRN
ExtSS Adptr
Service Bus
Content Server
Corp Data
F W
Portal Servers
Application Servers
UM (Mail) Servers
Transaction Server
Trusted Net
Edge Server
Security Proxy
Web Proxy/ Cache
Streaming Server
UA/VB
VPN
MTA
WAP GW
Web Srvr
Load Binc
DMZ Net
ASP
ASP (10s - 100s)
Corp SIP Access
Wireless
PSTN
Internet

FIG. 8

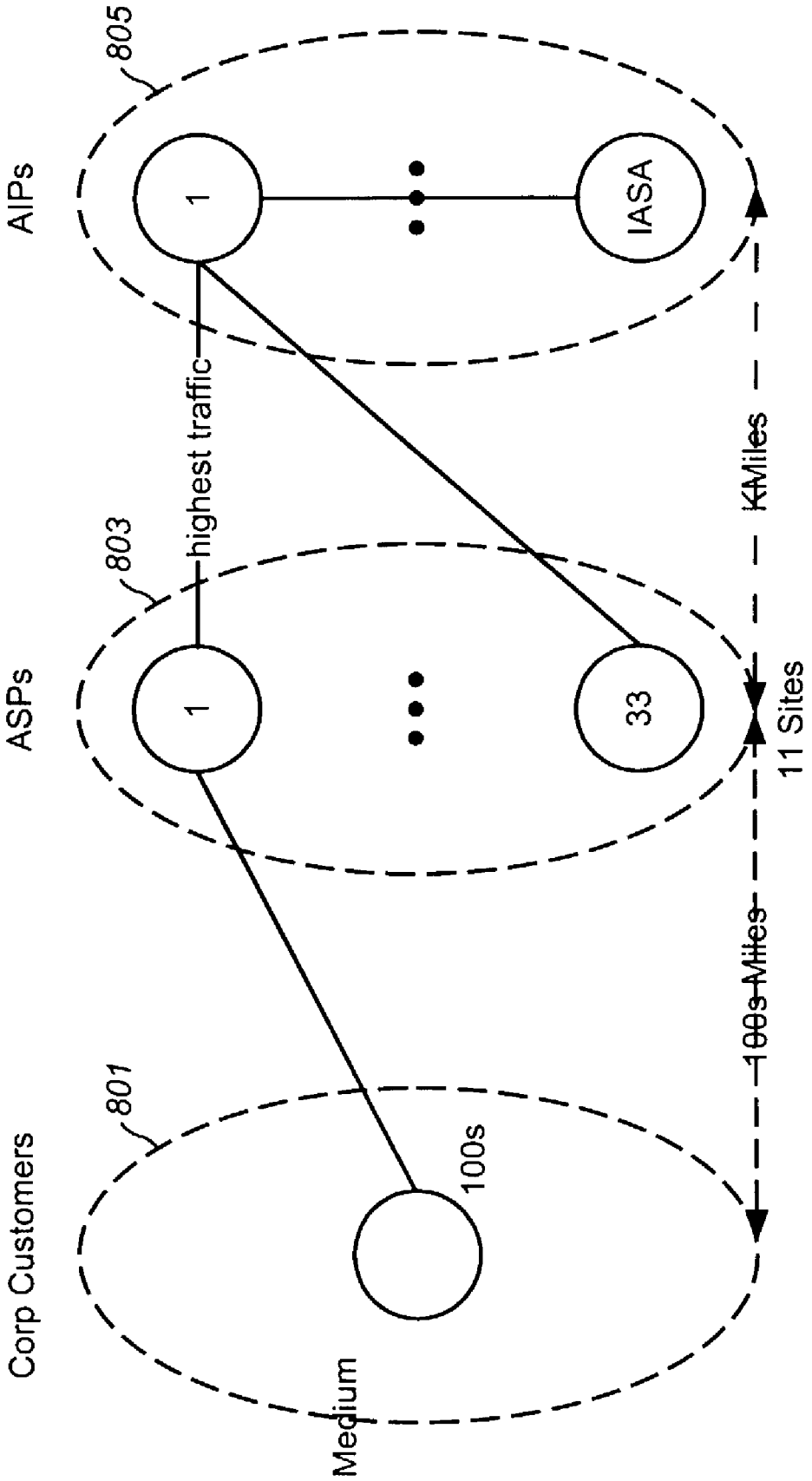
Corp Customers
801
Medium
100s
ASPs
803
1
33
highest traffic
AIPs
805
1
IASA
100s Miles
11 Sites
KMiles

FIG. 9A

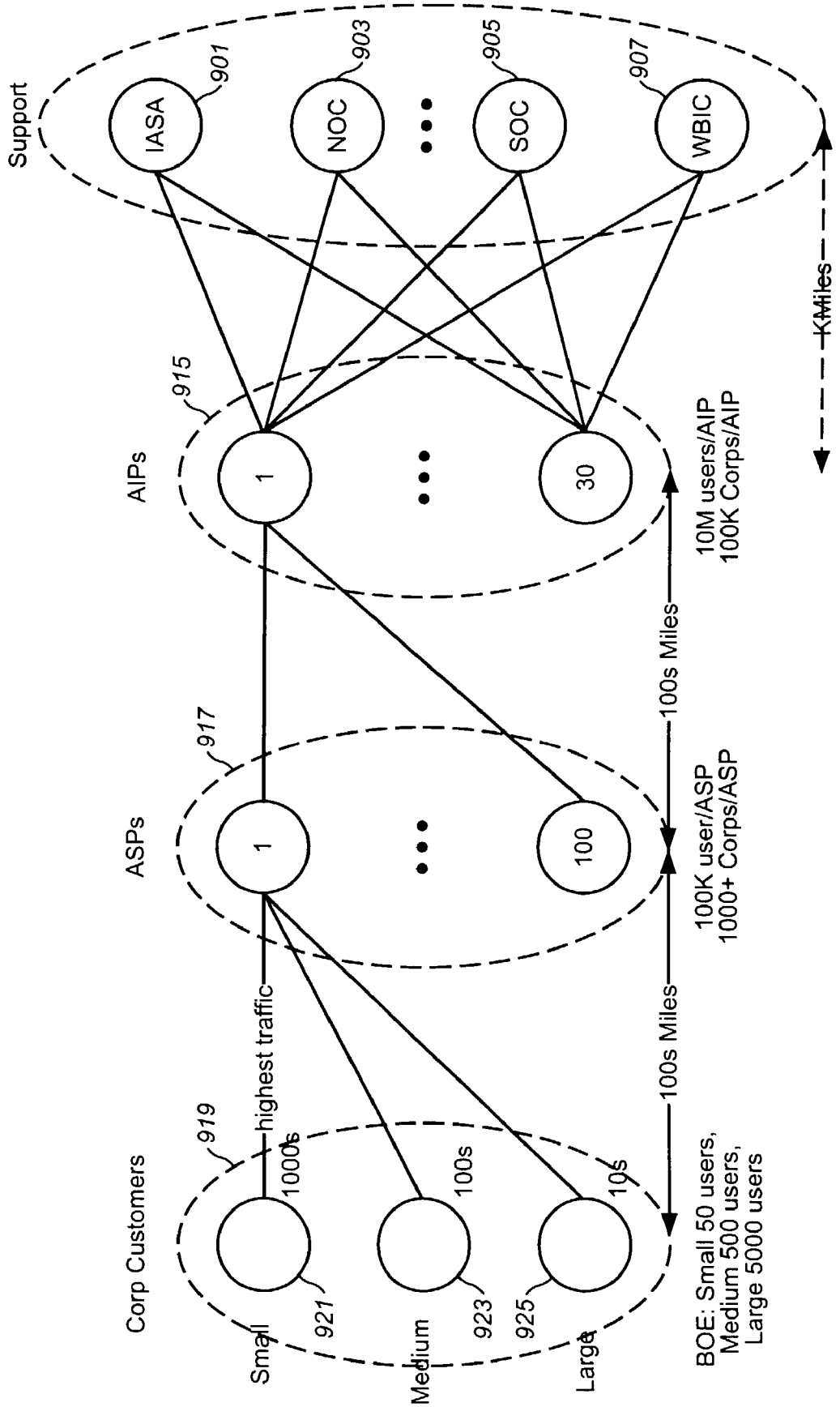
Support
IASA
901
NOC
903
SOC
905
WBIC
907
AIPs
915
1
30
10M users/AIP
100K Corps/AIP
100s Miles
ASPs
917
1
100
100K user/ASP
1000+ Corps/ASP
100s Miles
Corp Customers
919
highest traffic
1000s
100s
10s
Small
921
Medium
923
Large
925
BOE: Small 50 users,
Medium 500 users,
Large 5000 users
KMiles

FIG. 9B

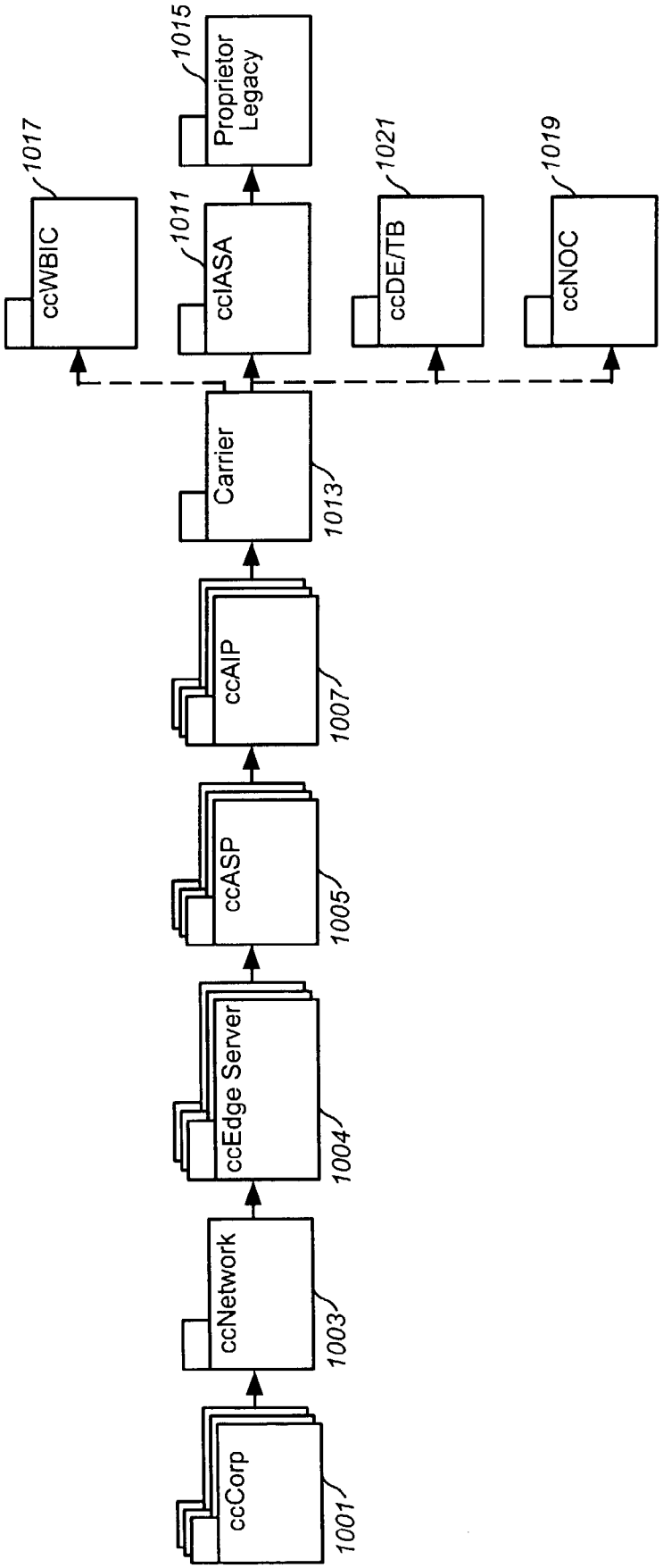
ccCorp
1001
ccNetwork
1003
ccEdge Server
1004
ccASP
1005
ccAIP
1007
Carrier
1013
ccWBIC
1017
ccIASA
1011
Proprietor Legacy
1015
ccDE/TB
1021
ccNOC
1019

FIG. 10

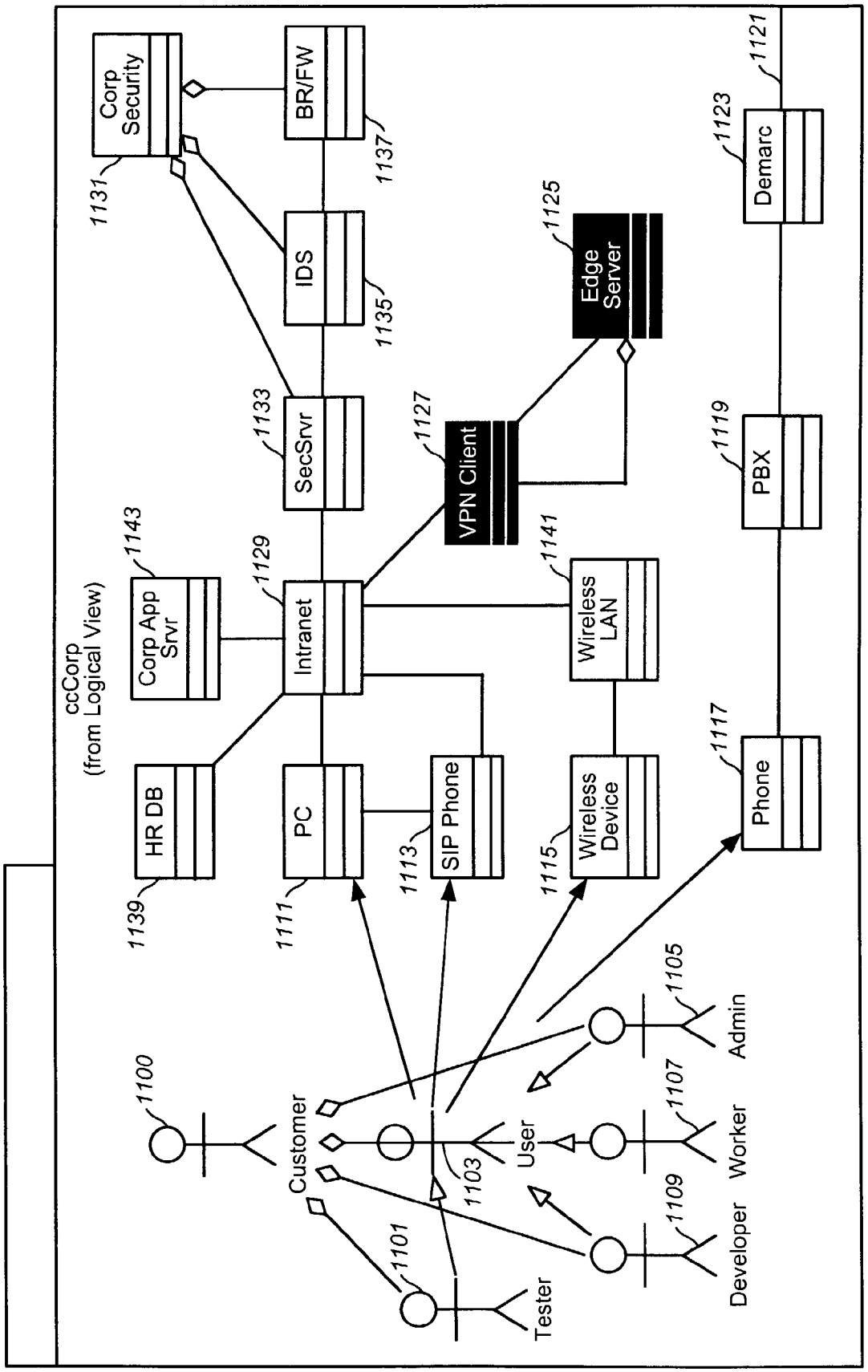
ccCorp
(from Logical View)
Corp Security
1131
BR/FW
1137
IDS
1135
SecSrvr
1133
Intranet
1129
Corp App Srvr
1143
HR DB
1139
PC
1111
SIP Phone
1113
VPN Client
1127
Edge Server
1125
Wireless LAN
1141
Wireless Device
1115
Demarc
1123
1121
PBX
1119
Phone
1117
Customer
1100
User
1103
Tester
1101
Admin
1105
Worker
1107
Developer
1109

FIG. 11

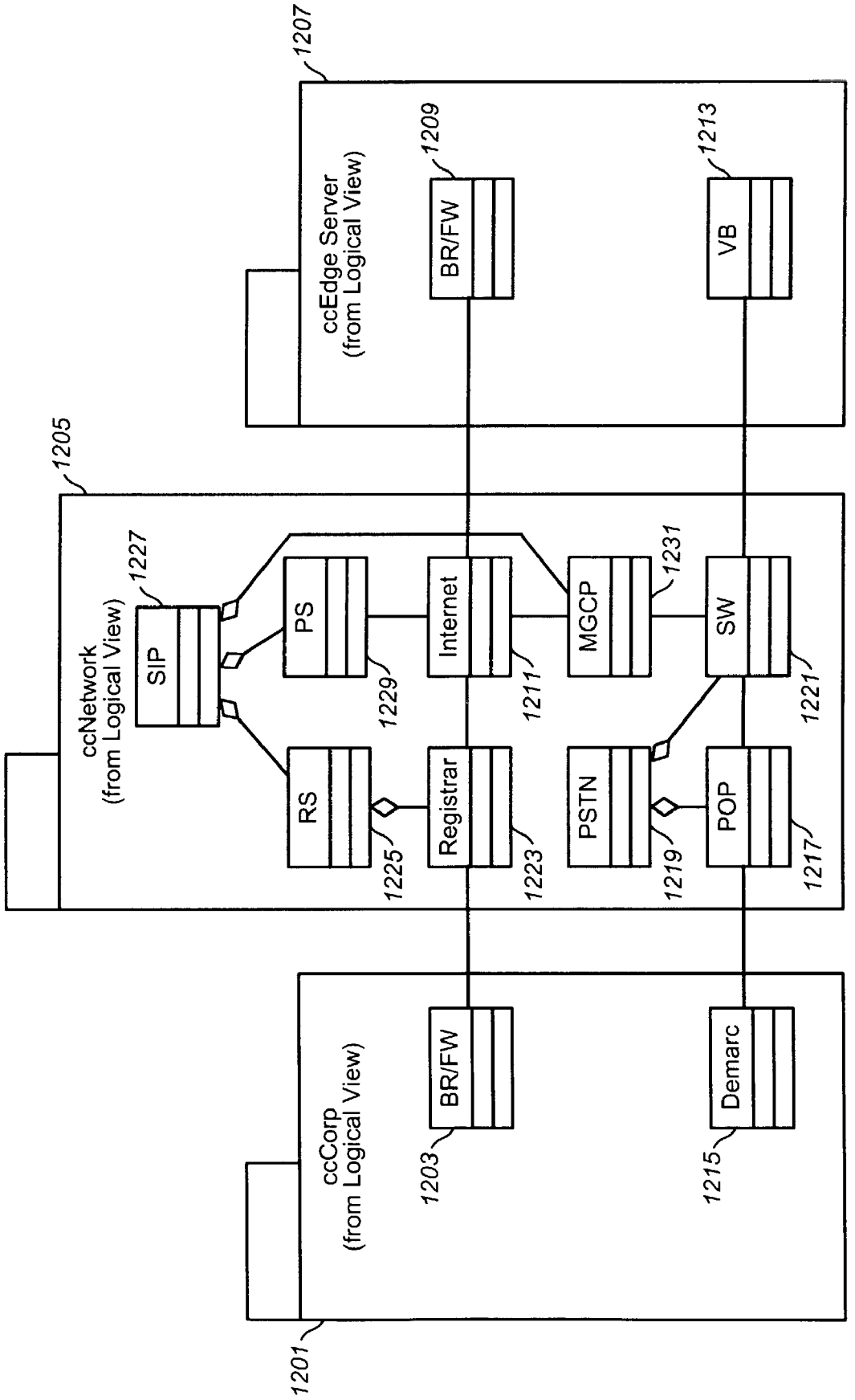
1207
ccEdge Server
(from Logical View)
1209
BR/FW
1213
VB
1205
ccNetwork
(from Logical View)
1227
SIP
PS
1229
Internet
1211
MGCP
1231
SW
1221
RS
1225
Registrar
1223
PSTN
1219
POP
1217
ccCorp
(from Logical View)
BR/FW
1203
Demarc
1215
1201

FIG. 12

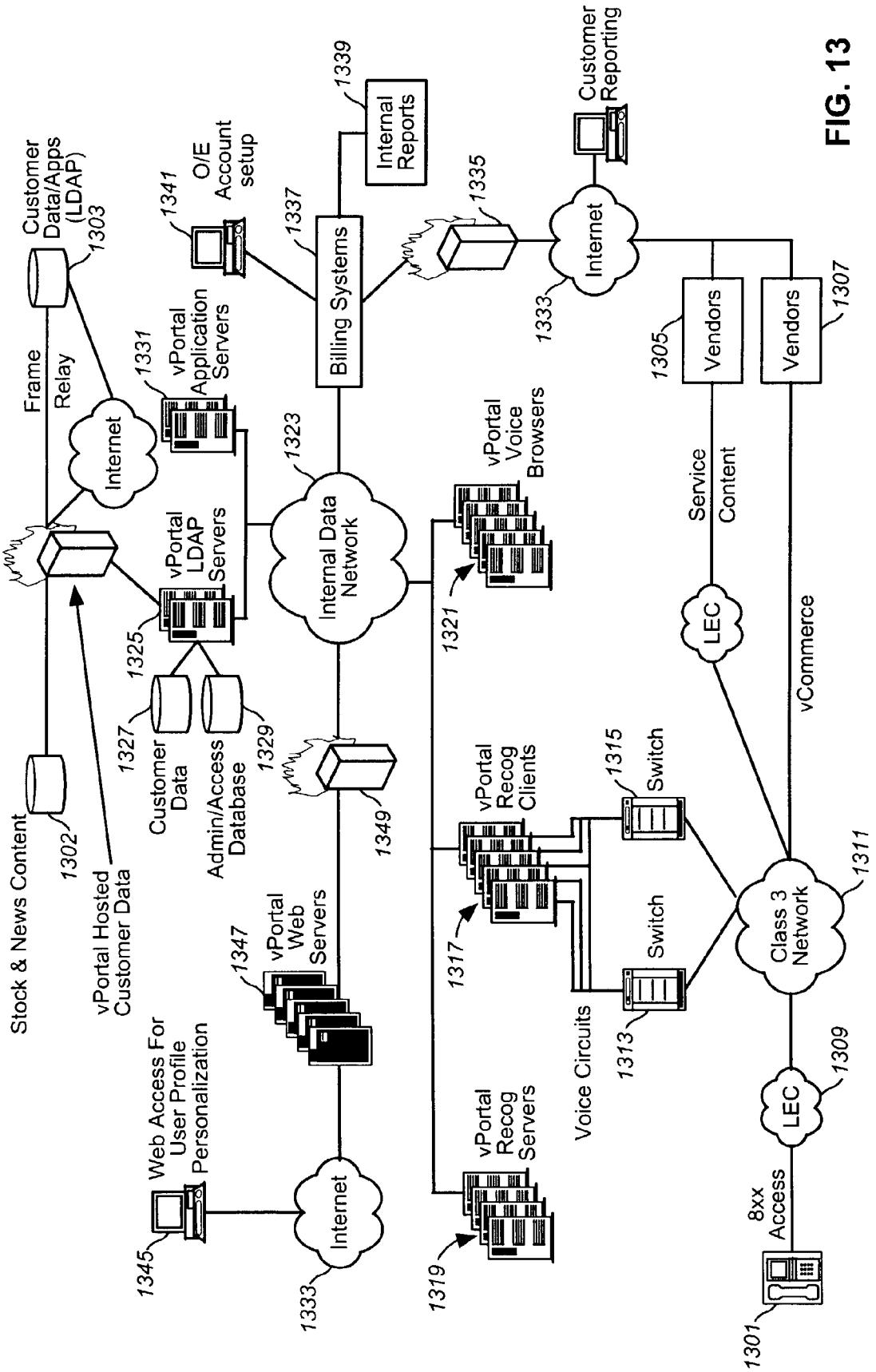
Customer Data/Apps (LDAP)
1303
Frame Relay
Internet
1331
vPortal Application Servers
1341
O/E Account setup
1337
Billing Systems
1339
Internal Reports
1335
Internet
Customer Reporting
1333
1305
Vendors
Vendors
1307
1323
Internal Data Network
vPortal Voice Browsers
1321
Service
Content
LEC
vCommerce
1325
vPortal LDAP Servers
1327
Customer Data
1329
Admin/Access Database
1349
vPortal Recog Clients
1315
Switch
Switch
1317
1311
Class 3 Network
Stock & News Content
1302
vPortal Hosted Customer Data
1347
vPortal Web Servers
Voice Circuits
1313
1309
LEC
Web Access For User Profile Personalization
vPortal Recog Servers
8xx Access
1345
Internet
1333
1319
1301

FIG. 13

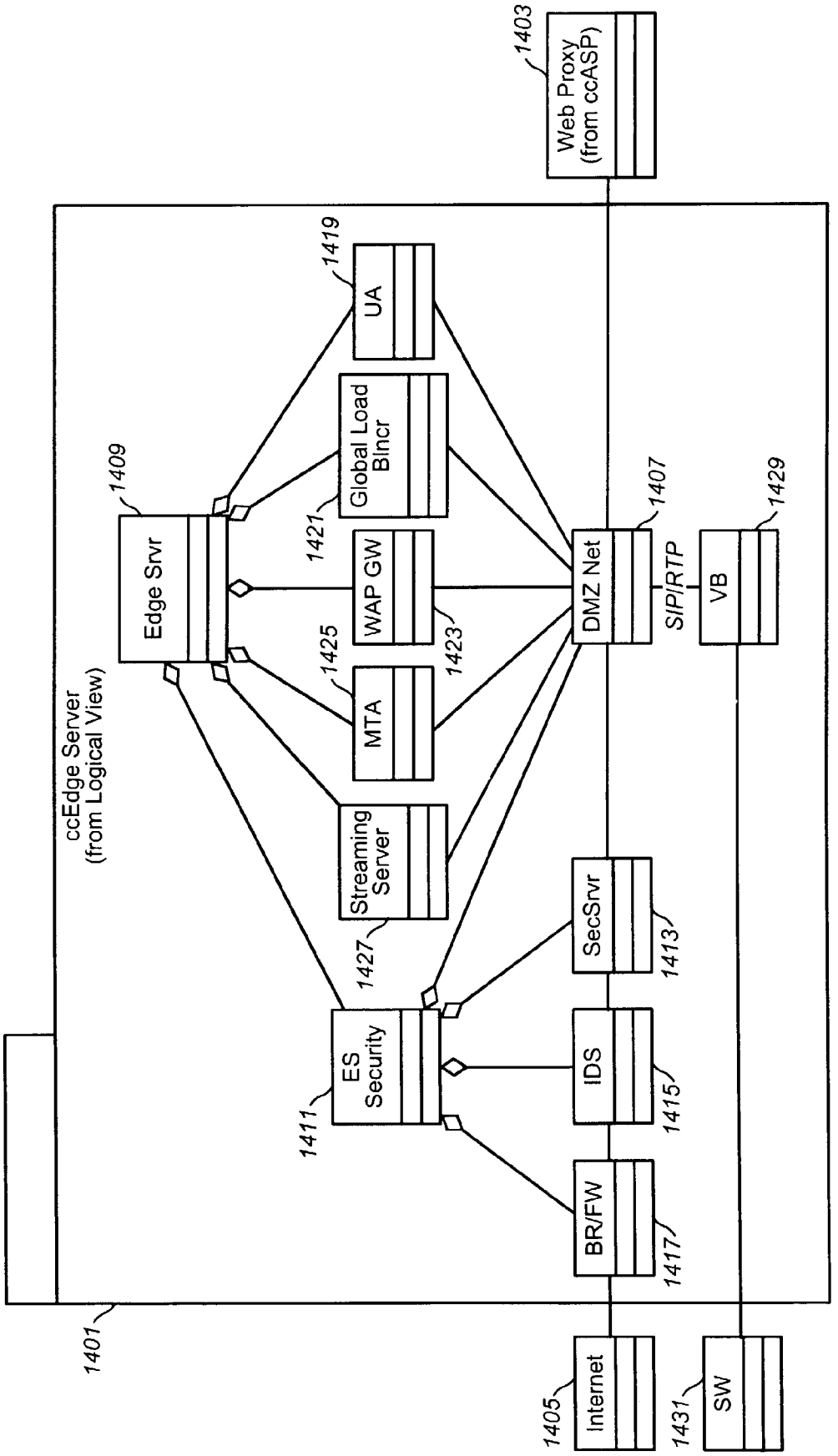
ccEdge Server
(from Logical View)
1401
Edge Srvr
1409
ES
Security
1411
Streaming
Server
1427
MTA
1425
WAP GW
1423
Global Load
Blncr
1421
UA
1419
Web Proxy
(from ccASP)
1403
DMZ Net
1407
SIP/RTP
VB
1429
BR/FW
1417
IDS
1415
SecSrvr
1413
Internet
1405
SW
1431

FIG. 14

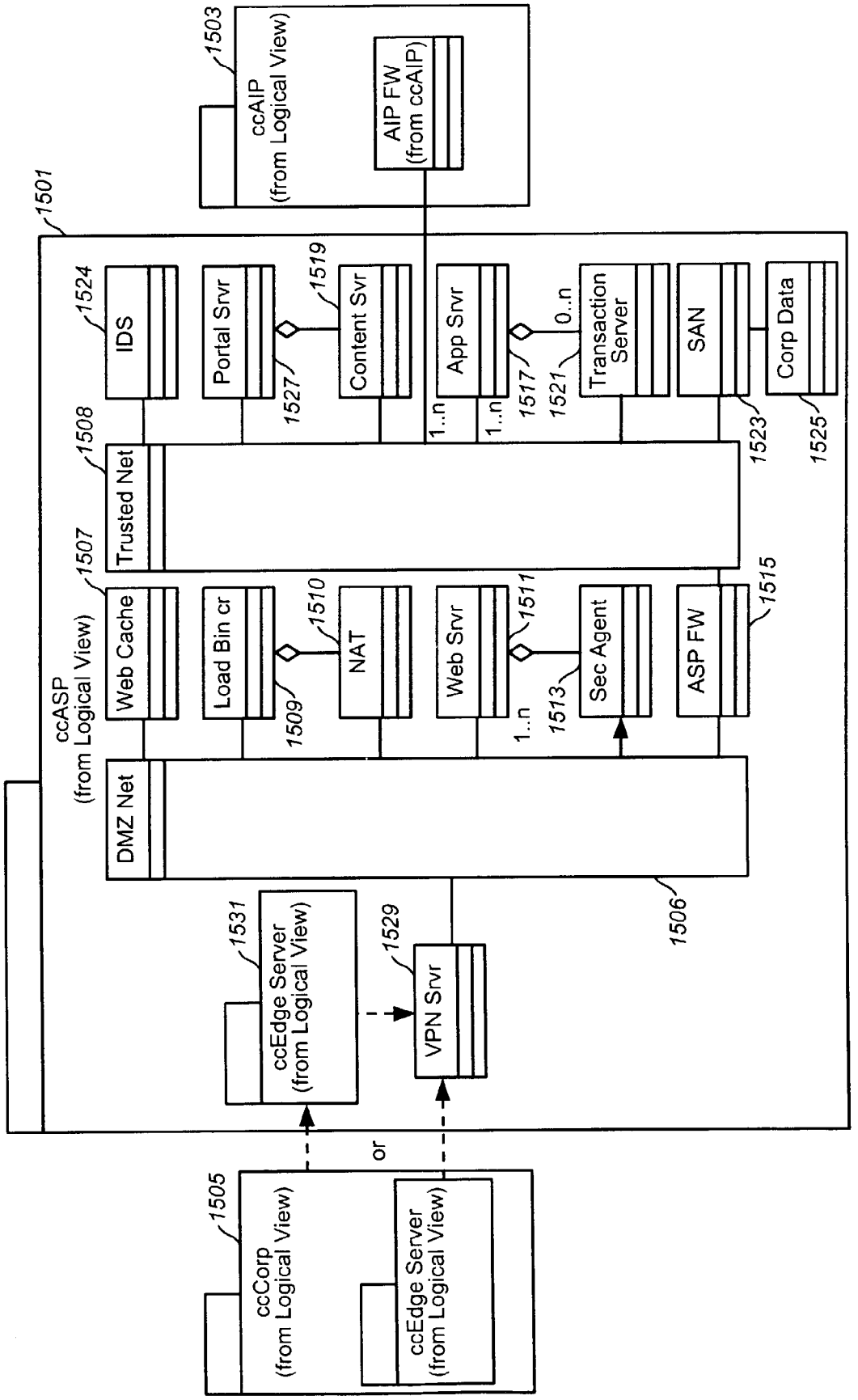
1503
ccAIP
(from Logical View)
AIP FW
(from ccAIP)
1501
1524
IDS
Portal Srvr
1527
1519
Content Svr
App Srvr
1517
0..n
1521
Transaction
Server
SAN
1523
Corp Data
1525
1..n
1..n
1508
Trusted Net
1507
ccASP
(from Logical View)
Web Cache
Load Bin cr
1509
1510
NAT
Web Srvr
1511
1..n
1513
Sec Agent
ASP FW
1515
DMZ Net
1506
1531
ccEdge Server
(from Logical View)
1529
VPN Srvr
or
1505
ccCorp
(from Logical View)
ccEdge Server
(from Logical View)

FIG. 15

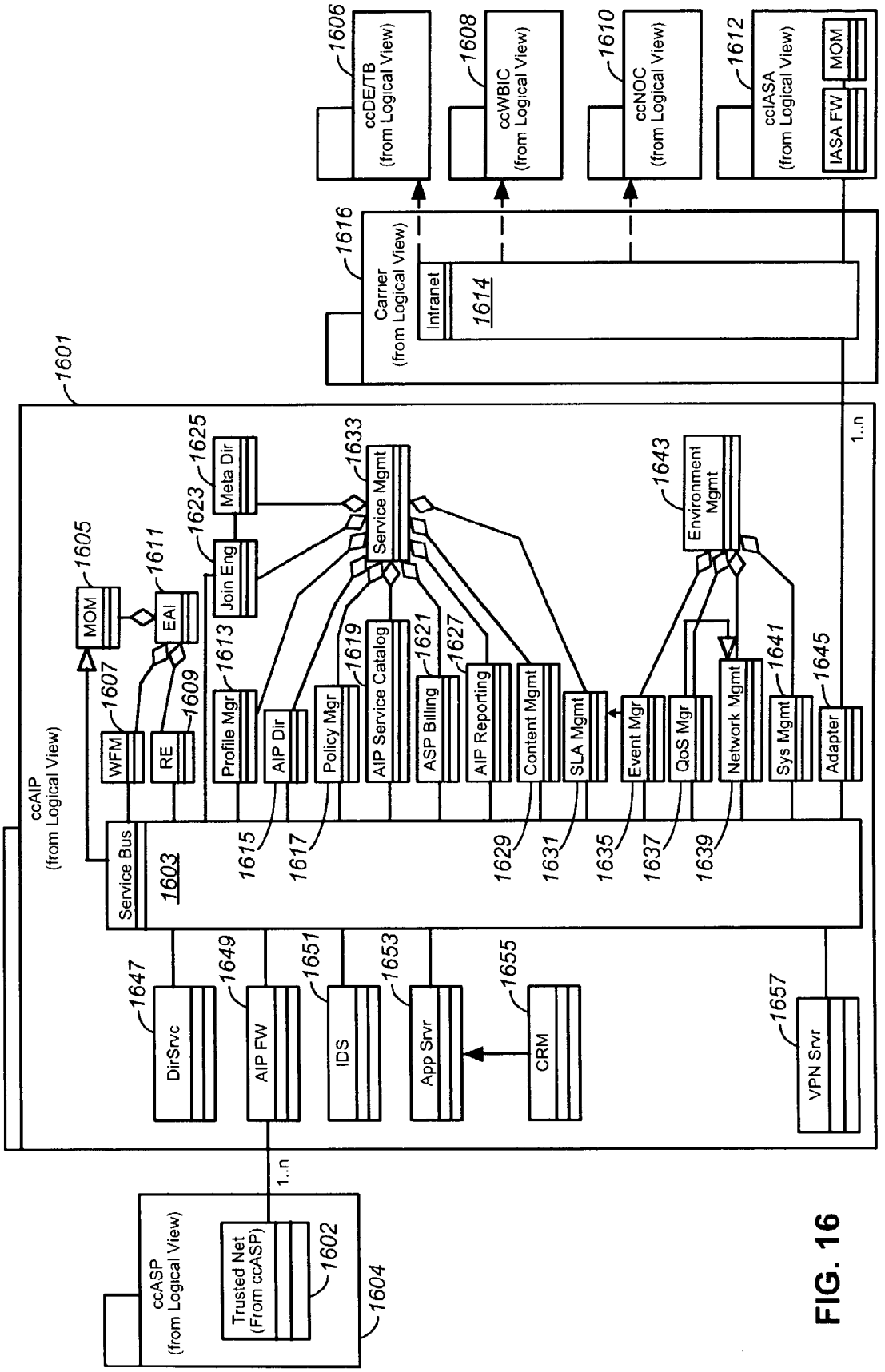
1606
ccDE/TB
(from Logical View)
1608
ccWBIC
(from Logical View)
1610
ccNOC
(from Logical View)
1612
ccIASA
(from Logical View)
MOM
IASA FW
1616
Carrier
(from Logical View)
Intranet
1614
1601
1625
Meta Dir
1623
Join Eng
1633
Service Mgmt
1643
Environment Mgmt
1605
MOM
1611
EAI
1607
WFM
1609
RE
1613
Profile Mgr
1619
AIP Dir
1621
Policy Mgr
1627
AIP Service Catalog
ASP Billing
AIP Reporting
Content Mgmt
SLA Mgmt
Event Mgr
QoS Mgr
Network Mgmt
1641
Sys Mgmt
1645
Adapter
1..n
ccAIP
(from Logical View)
Service Bus
1603
1615
1617
1629
1631
1635
1637
1639
1647
DirSrvc
1649
AIP FW
1651
IDS
1653
App Srvr
1655
CRM
1657
VPN Srvr
1..n
ccASP
(from Logical View)
Trusted Net
(From ccASP)
1602
1604

FIG. 16

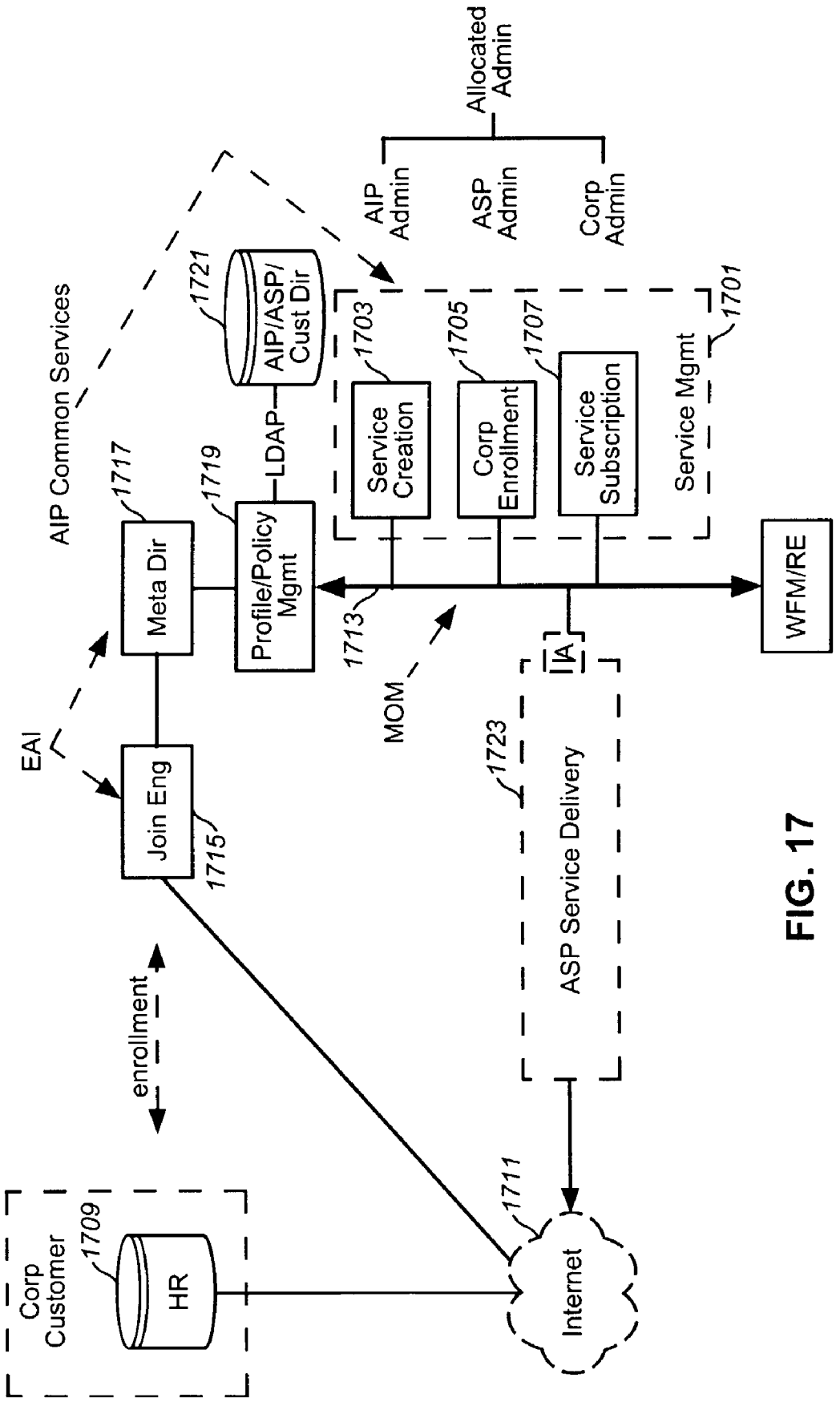
Allocated Admin
AIP Admin
ASP Admin
Corp Admin
AIP Common Services
1721
AIP/ASP/ Cust Dir
1703
1705
1707
1701
Service Creation
Corp Enrollment
Service Subscription
Service Mgmt
1717
1719
LDAP
Meta Dir
Profile/Policy Mgmt
1713
WFM/RE
MOM
A
EAI
Join Eng
1715
1723
ASP Service Delivery
enrollment
1711
Corp Customer
1709
HR
Internet

FIG. 17

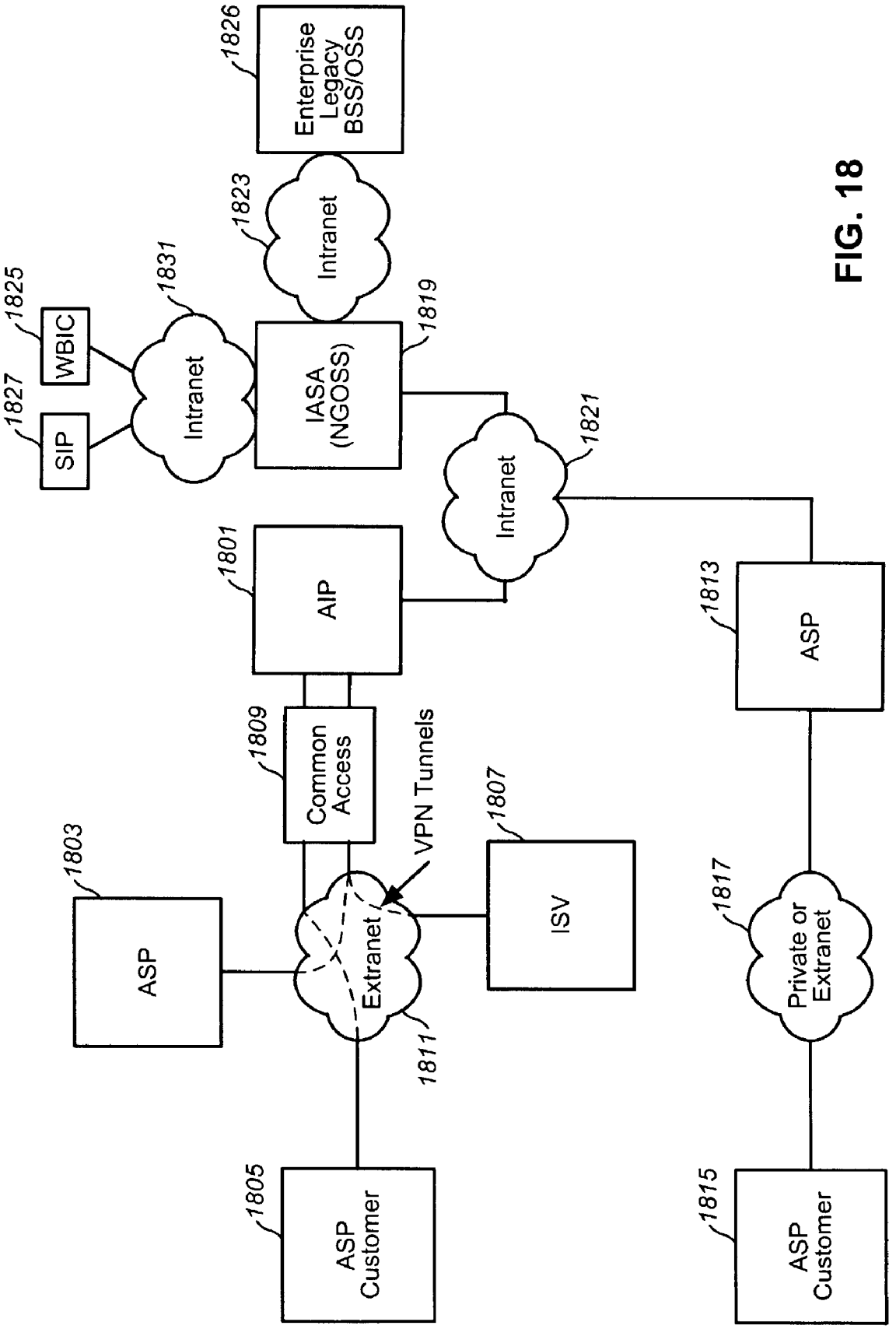
1826
Enterprise Legacy BSS/OSS
1823
Intranet
1825
WBIC
1831
1827
SIP
Intranet
IASA (NGOSS)
1819
1821
Intranet
1801
AIP
1813
ASP
1809
Common Access
VPN Tunnels
1807
1803
ASP
Extranet
ISV
1817
Private or Extranet
1811
1805
ASP Customer
1815
ASP Customer

FIG. 18

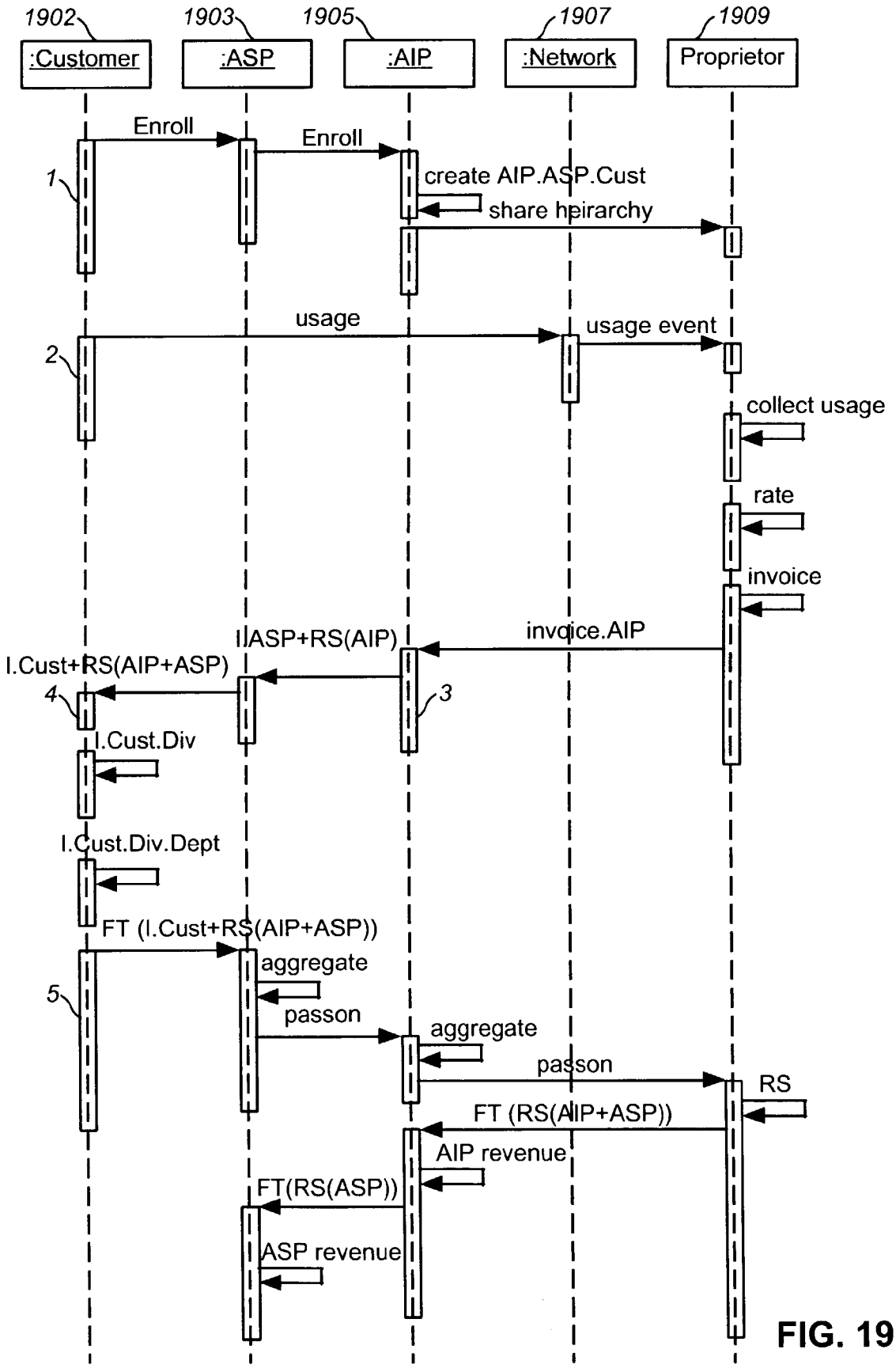
1902
1903
1905
1907
1909
:Customer
:ASP
:AIP
:Network
Proprietor
Enroll
Enroll
1
create AIP.ASP.Cust
share hpirarchy
usage
usage event
2
collect usage
rate
invoice
I.ASP+RS(AIP)
invoice.AIP
I.Cust+RS(AIP+ASP)
4
3
I.Cust.Div
I.Cust.Div.Dept
FT (I.Cust+RS(AIP+ASP))
aggregate
5
passon
aggregate
passon
RS
FT (RS(AIP+ASP))
AIP revenue
FT(RS(ASP))
ASP revenue

FIG. 19

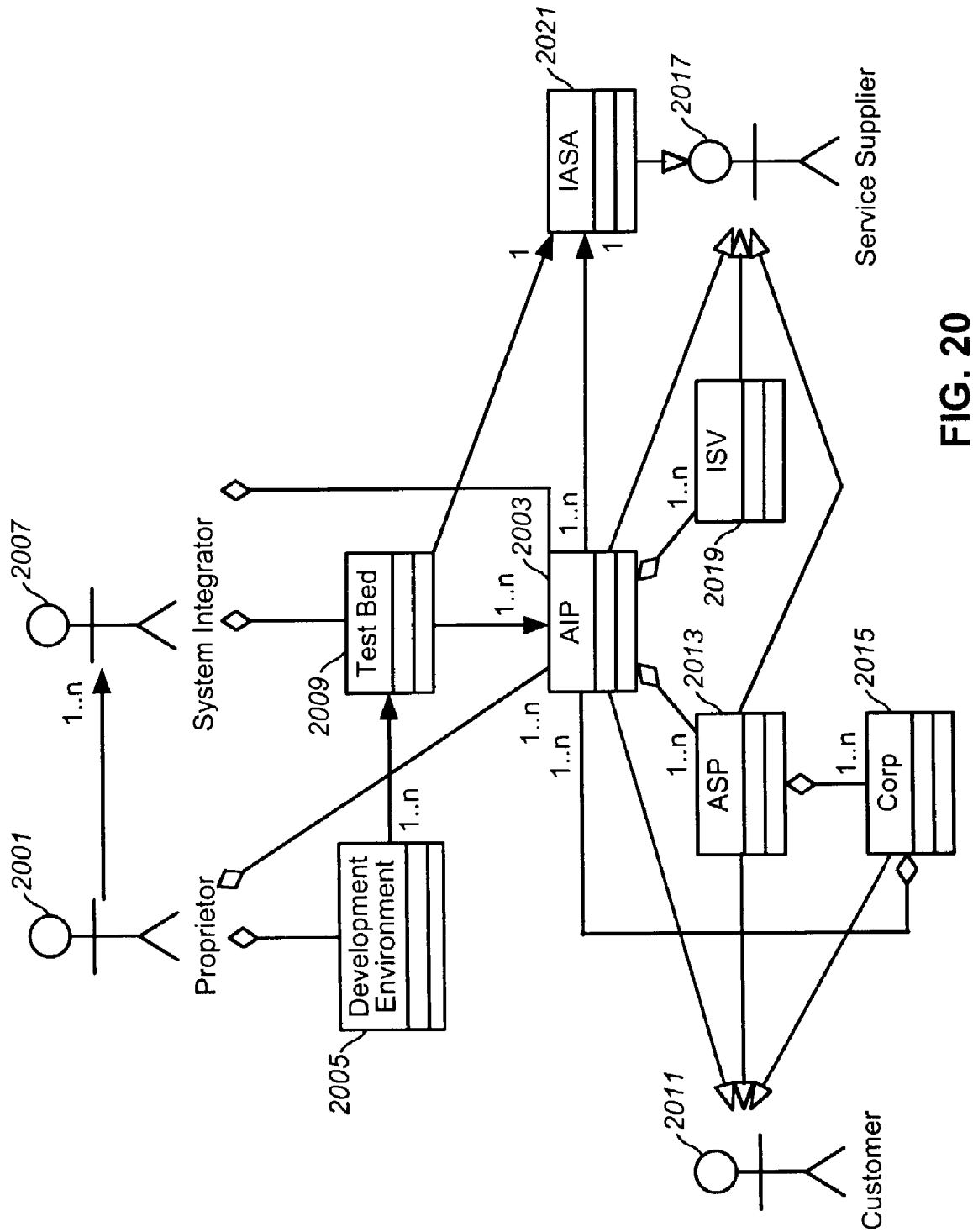
2001
2007
1..n
Proprietor
System Integrator
2005
Development Environment
2009
Test Bed
1..n
1..n
2003
AIP
1..n
1..n
1
1
2021
IASA
2017
Service Supplier
1..n
2019
ISV
1..n
2013
ASP
1..n
2015
Corp
1..n
2011
Customer

FIG. 20

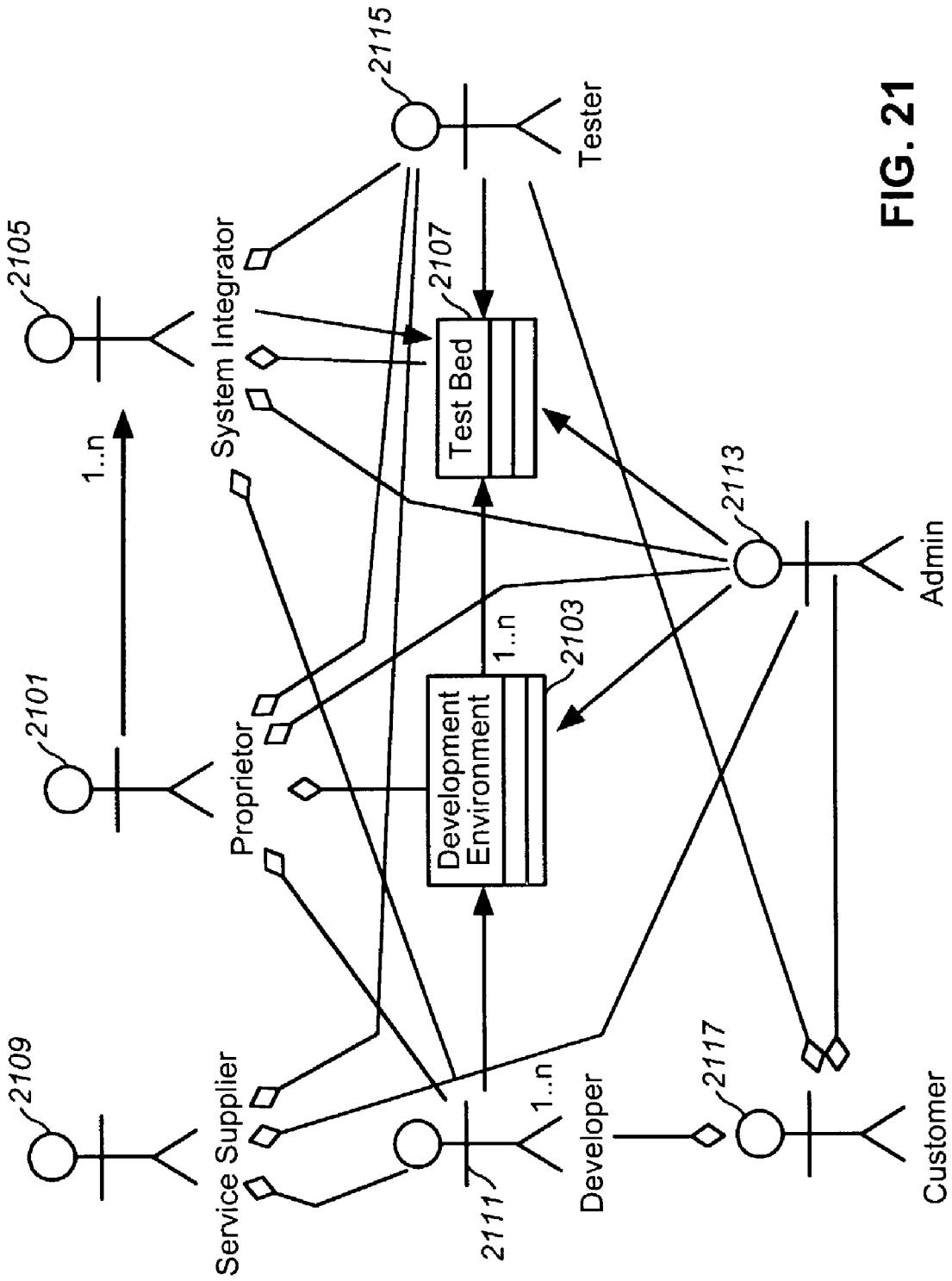
2105
2101
2109
1..n
System Integrator
Proprietor
Service Supplier
2115
2107
Test Bed
Development Environment
2103
1..n
2111
1..n
Developer
2113
2117
Tester
Admin
Customer

FIG. 21

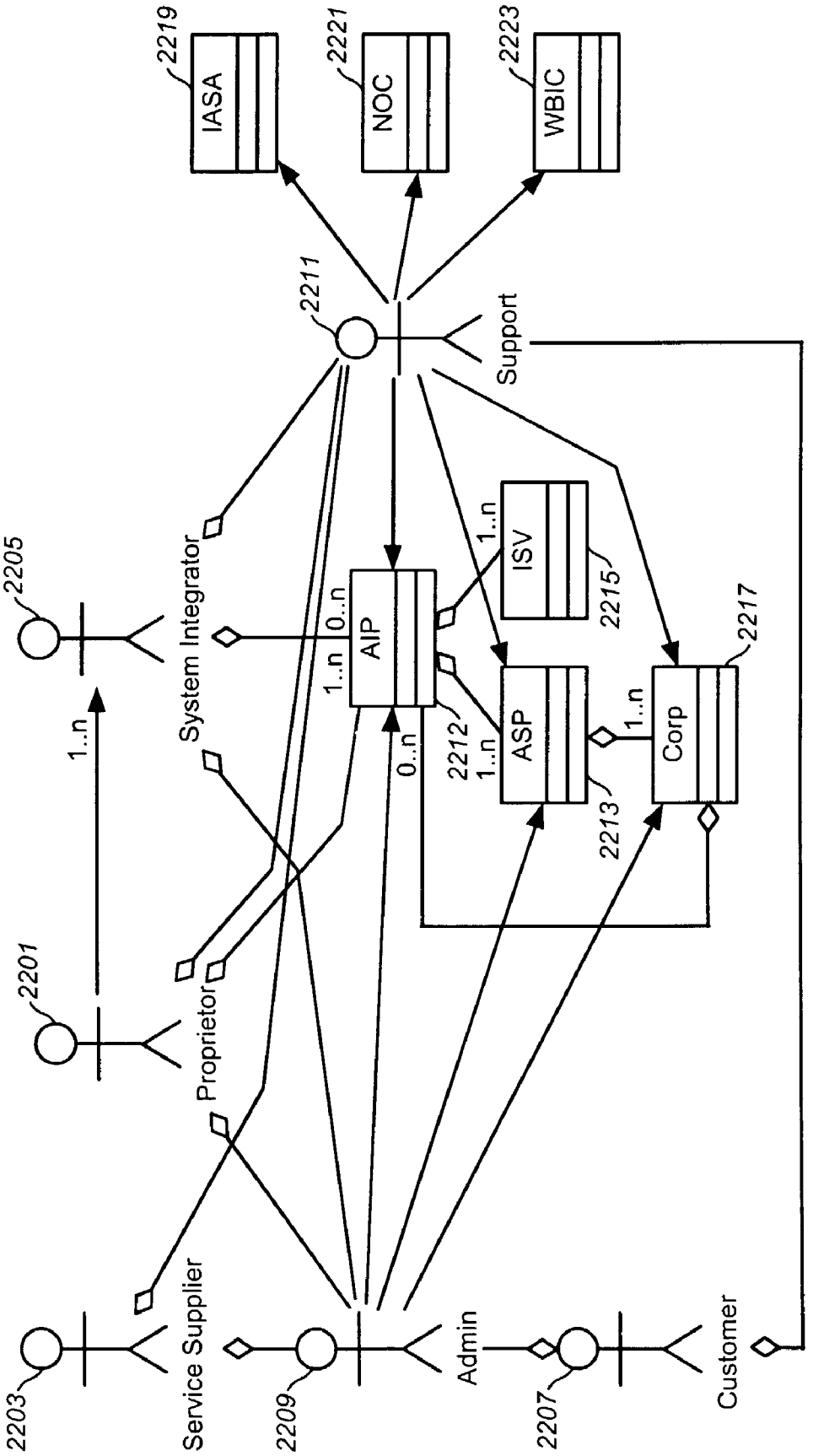
2219
IASA
2221
NOC
2223
WBIC
2211
Support
2205
System Integrator
1..n
0..n
AIP
1..n
2212
0..n
1..n
ISV
2215
ASP
1..n
2213
1..n
Corp
2217
2201
Proprietor
2203
Service Supplier
2209
Admin
2207
Customer

FIG. 22

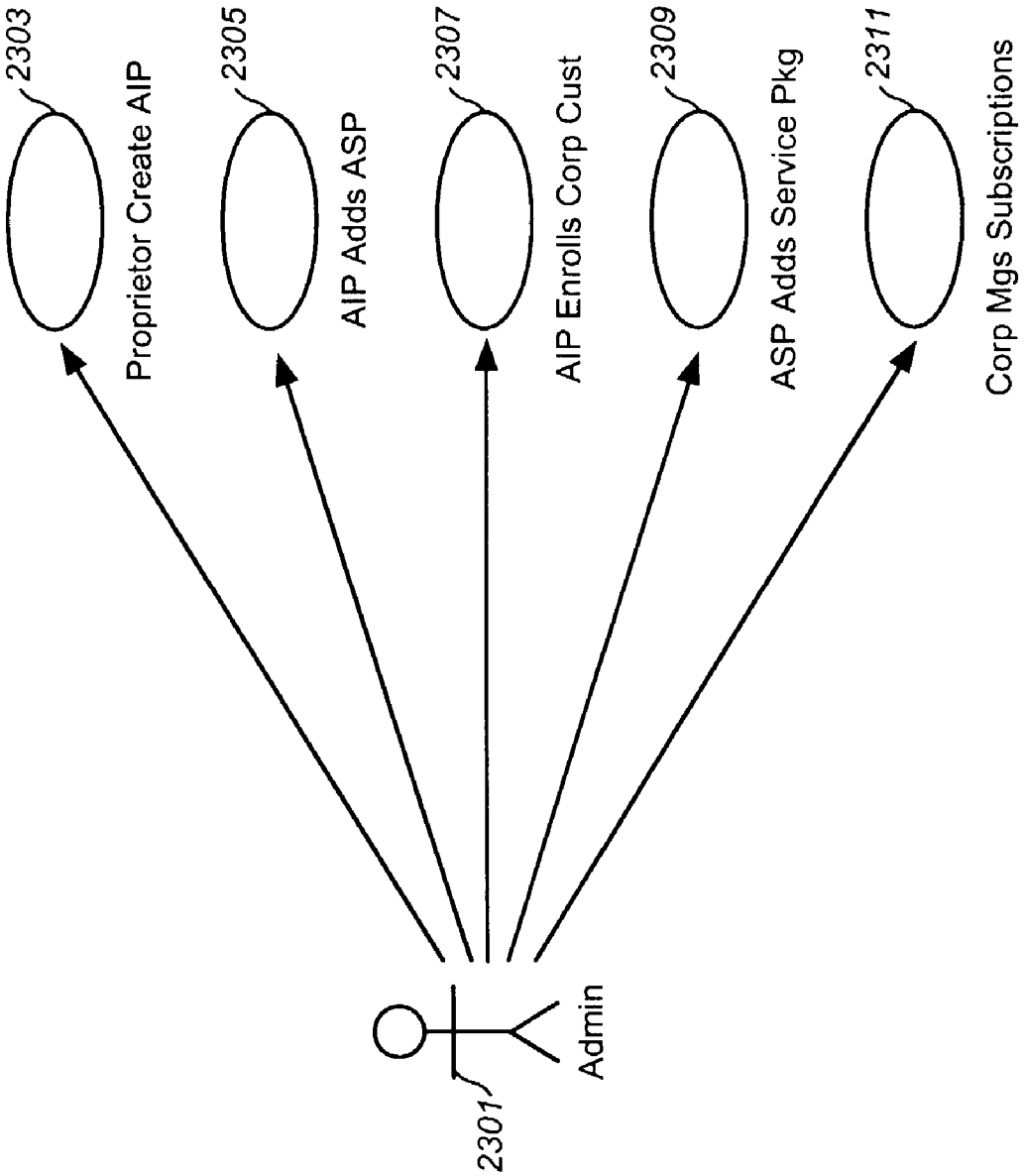
2303
Proprietor Create AIP
2305
AIP Adds ASP
2307
AIP Enrolls Corp Cust
2309
ASP Adds Service Pkg
2311
Corp Mgs Subscriptions
2301
Admin

FIG. 23

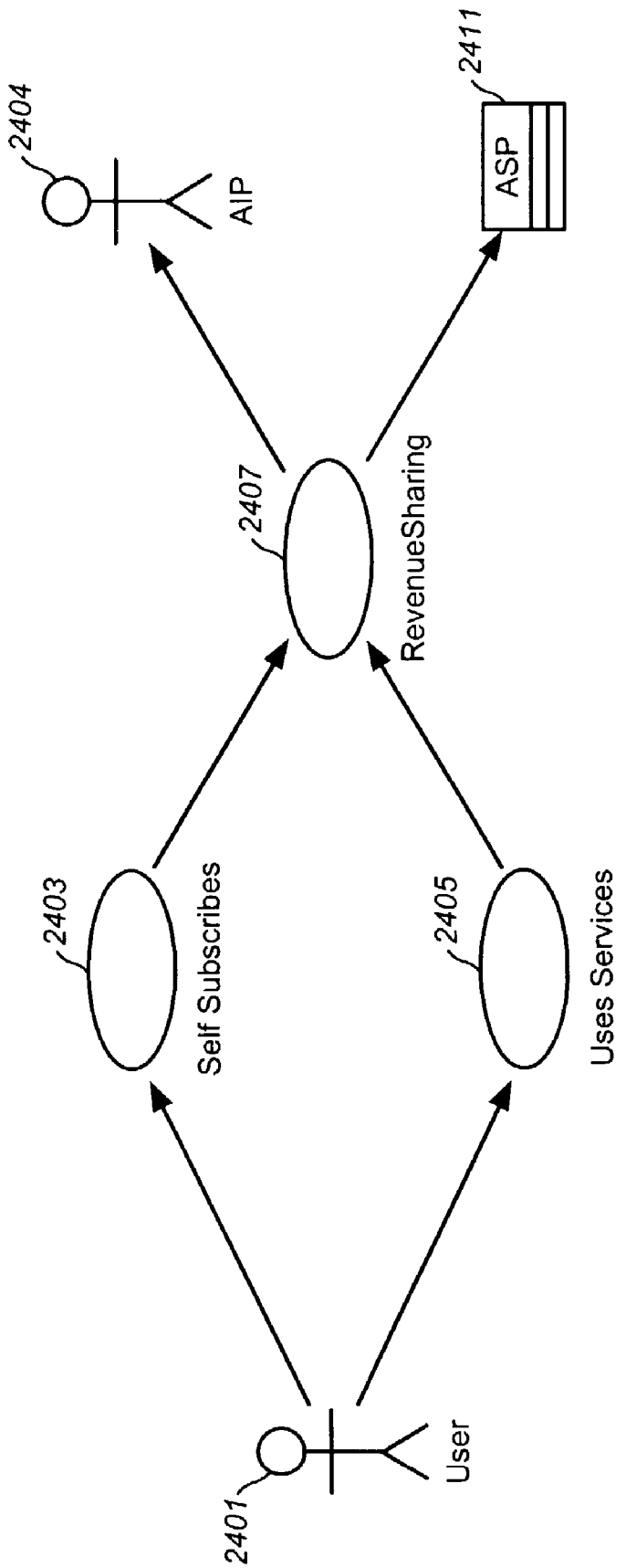
2404
AIP
2411
ASP
2407
RevenueSharing
2403
Self Subscribes
2405
Uses Services
2401
User

FIG. 24

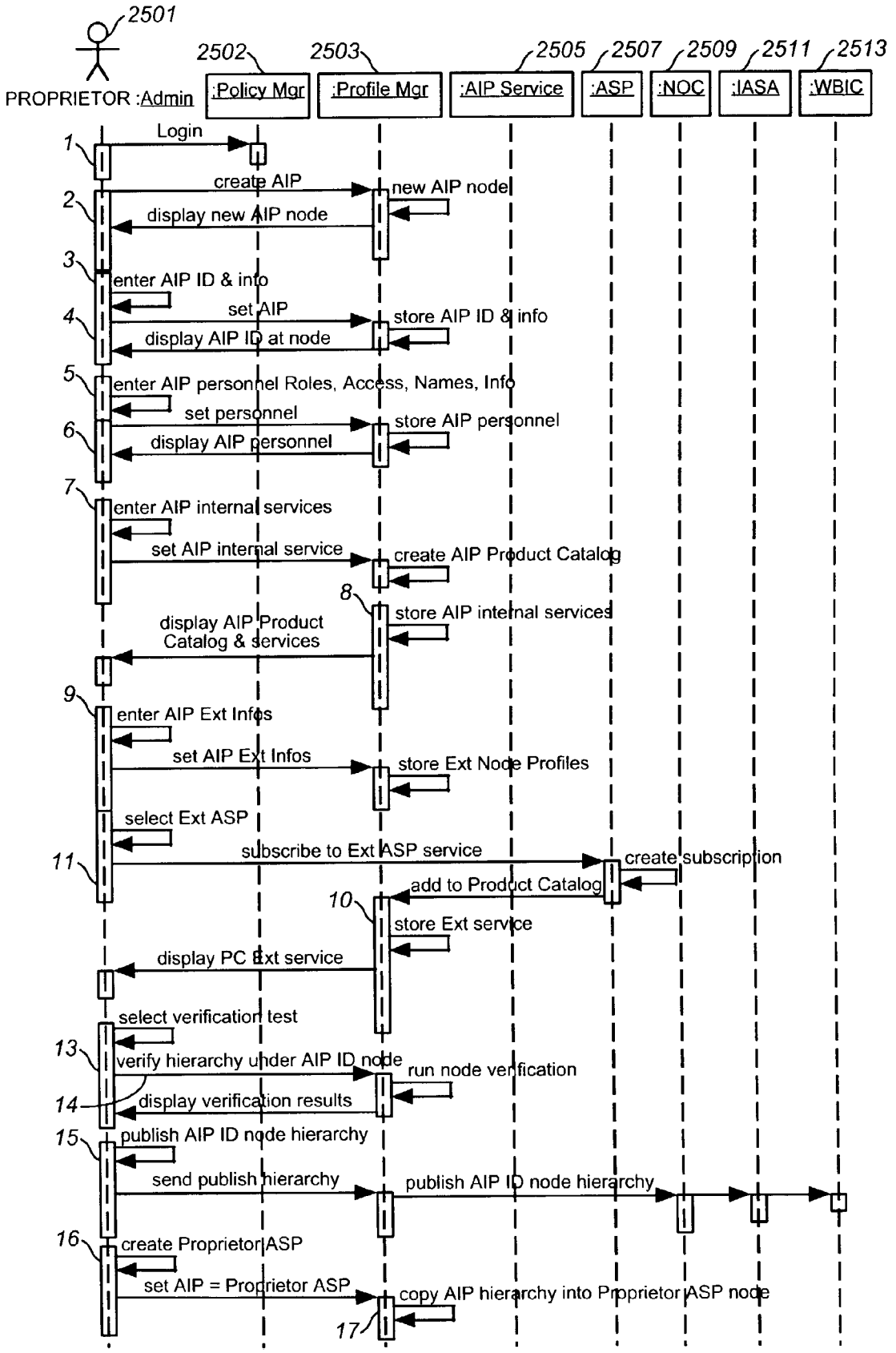
2501
PROPRIETOR :Admin
2502
:Policy Mgr
2503
:Profile Mgr
2505
:AIP Service
2507
:ASP
2509
:NOC
2511
:IASA
2513
:WBIC
1
Login
2
create AIP
new AIP node
display new AIP node
3
enter AIP ID & info
4
set AIP
store AIP ID & info
display AIP ID at node
5
enter AIP personnel Roles, Access, Names, Info
6
set personnel
store AIP personnel
display AIP personnel
7
enter AIP internal services
set AIP internal service
create AIP Product Catalog
8
store AIP internal services
display AIP Product Catalog & services
9
enter AIP Ext Infos
set AIP Ext Infos
store Ext Node Profiles
select Ext ASP
11
subscribe to Ext ASP service
create subscription
add to Product Catalog
10
store Ext service
display PC Ext service
select verification test
13
verify hierarchy under AIP ID node
run node verification
14
display verification results
15
publish AIP ID node hierarchy
send publish hierarchy
publish AIP ID node hierarchy
16
create Proprietor ASP
set AIP = Proprietor ASP
copy AIP hierarchy into Proprietor ASP node
17

FIG. 25

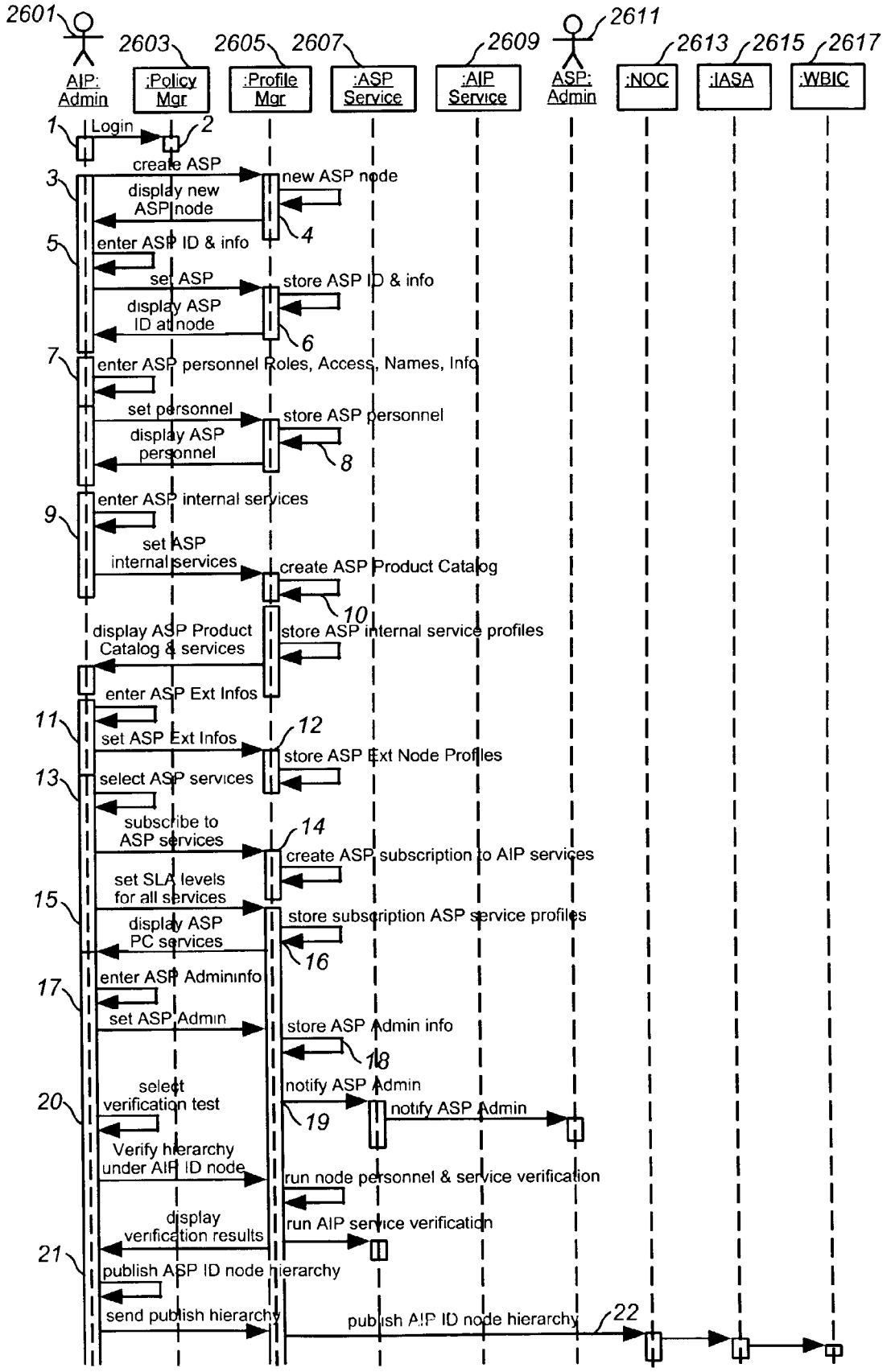
2601
2603
2605
2607
2609
2611
2613
2615
2617
AIP: Admin
:Policy Mgr
:Profile Mgr
:ASP Service
:AIP Service
ASP: Admin
:NOC
:IASA
:WBIC
1
Login
2
create ASP
new ASP node
3
display new ASP node
4
5
enter ASP ID & info
set ASP
store ASP ID & info
display ASP ID at node
6
7
enter ASP personnel Roles, Access, Names, Info
set personnel
store ASP personnel
display ASP personnel
8
9
enter ASP internal services
set ASP internal services
create ASP Product Catalog
10
display ASP Product Catalog & services
store ASP internal service profiles
enter ASP Ext Infos
11
set ASP Ext Infos
12
store ASP Ext Node Profiles
13
select ASP services
subscribe to ASP services
14
create ASP subscription to AIP services
set SLA levels for all services
15
store subscription ASP service profiles
display ASP PC services
16
enter ASP Admininfo
17
set ASP Admin
store ASP Admin info
18
select verification test
notify ASP Admin
20
19
notify ASP Admin
Verify hierarchy under AIP ID node
run node personnel & service verification
display verification results
run AIP service verification
21
publish ASP ID node hierarchy
send publish hierarchy
publish AIP ID node hierarchy
22

FIG. 26

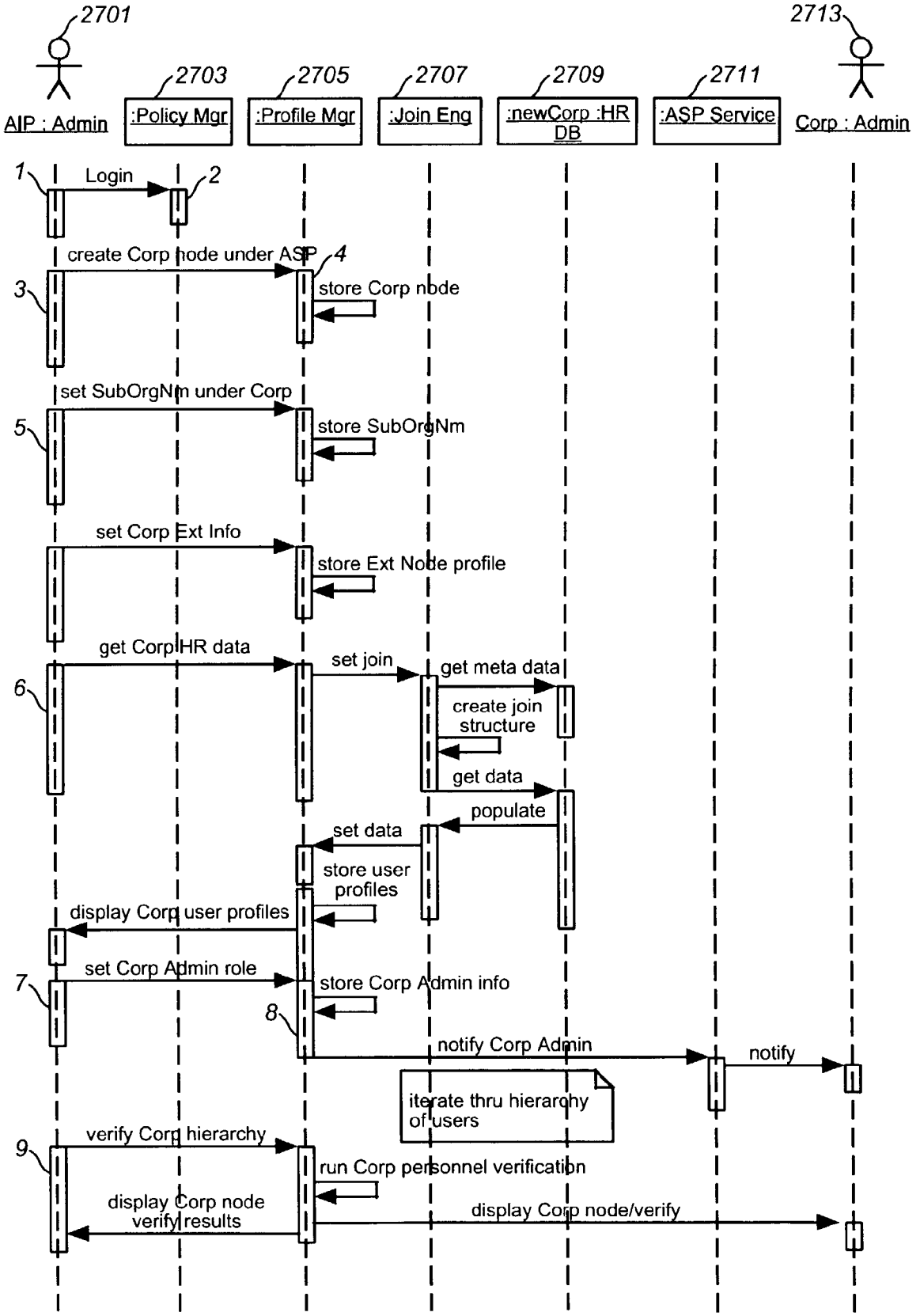
2701
2713
2703
2705
2707
2709
2711
AIP : Admin
:Policy Mgr
:Profile Mgr
:Join Eng
:newCorp :HR DB
:ASP Service
Corp : Admin
1
Login
2
create Corp node under ASP
4
3
store Corp node
set SubOrgNm under Corp
5
store SubOrgNm
set Corp Ext Info
store Ext Node profile
get CorpHR data
set join
get meta data
6
create join structure
get data
populate
set data
store user profiles
display Corp user profiles
set Corp Admin role
7
store Corp Admin info
8
notify Corp Admin
notify
iterate thru hierarchy of users
verify Corp hierarchy
9
run Corp personnel verification
display Corp node verify results
display Corp node/verify

FIG. 27

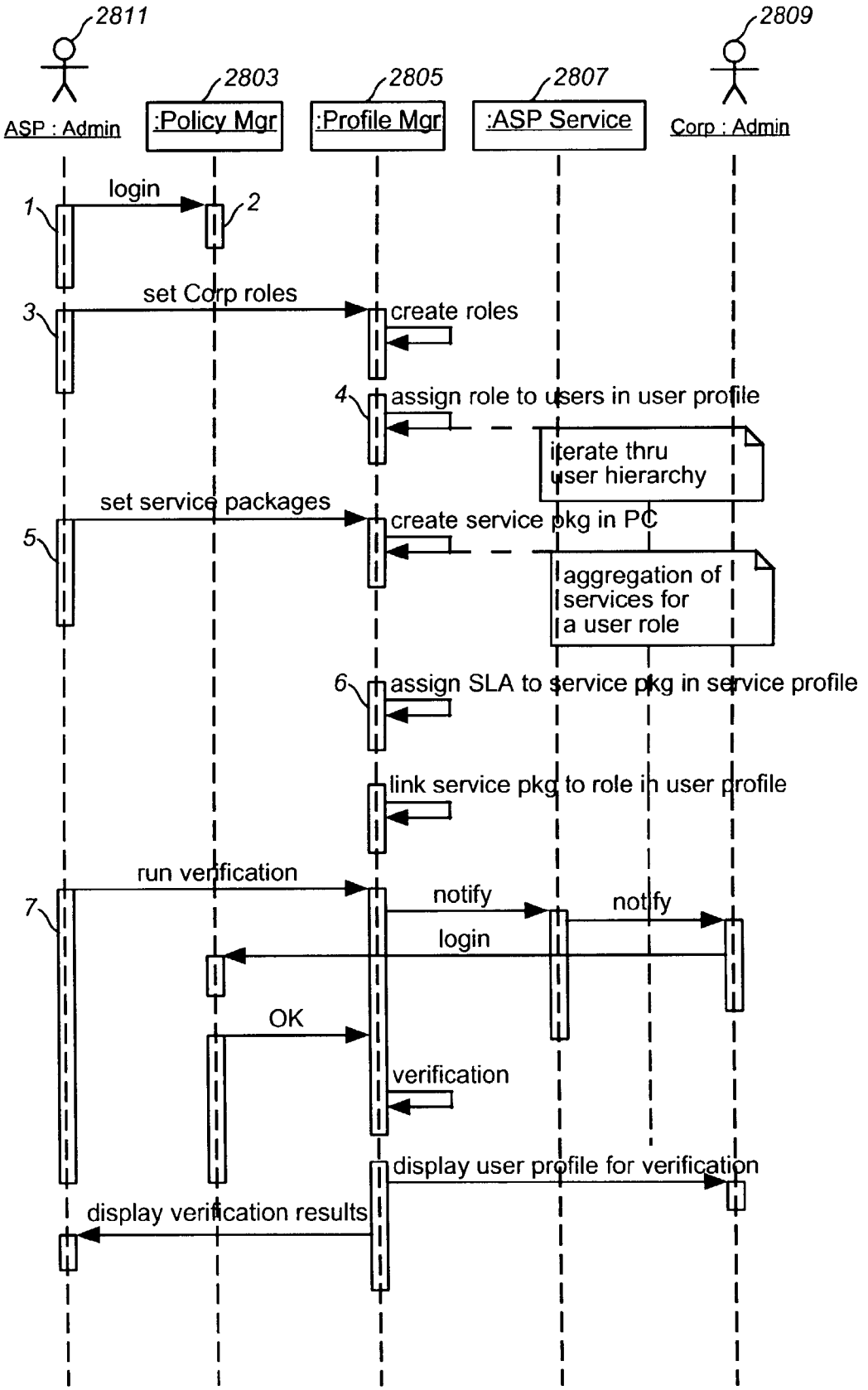
2811
2809
2803
2805
2807
ASP : Admin
:Policy Mgr
:Profile Mgr
:ASP Service
Corp : Admin
login
1
2
set Corp roles
3
create roles
4
assign role to users in user profile
iterate thru
user hierarchy
set service packages
5
create service pkg in PC
aggregation of
services for
a user role
6
assign SLA to service pkg in service profile
link service pkg to role in user profile
run verification
7
notify
notify
login
OK
verification
display user profile for verification
display verification results

FIG. 28

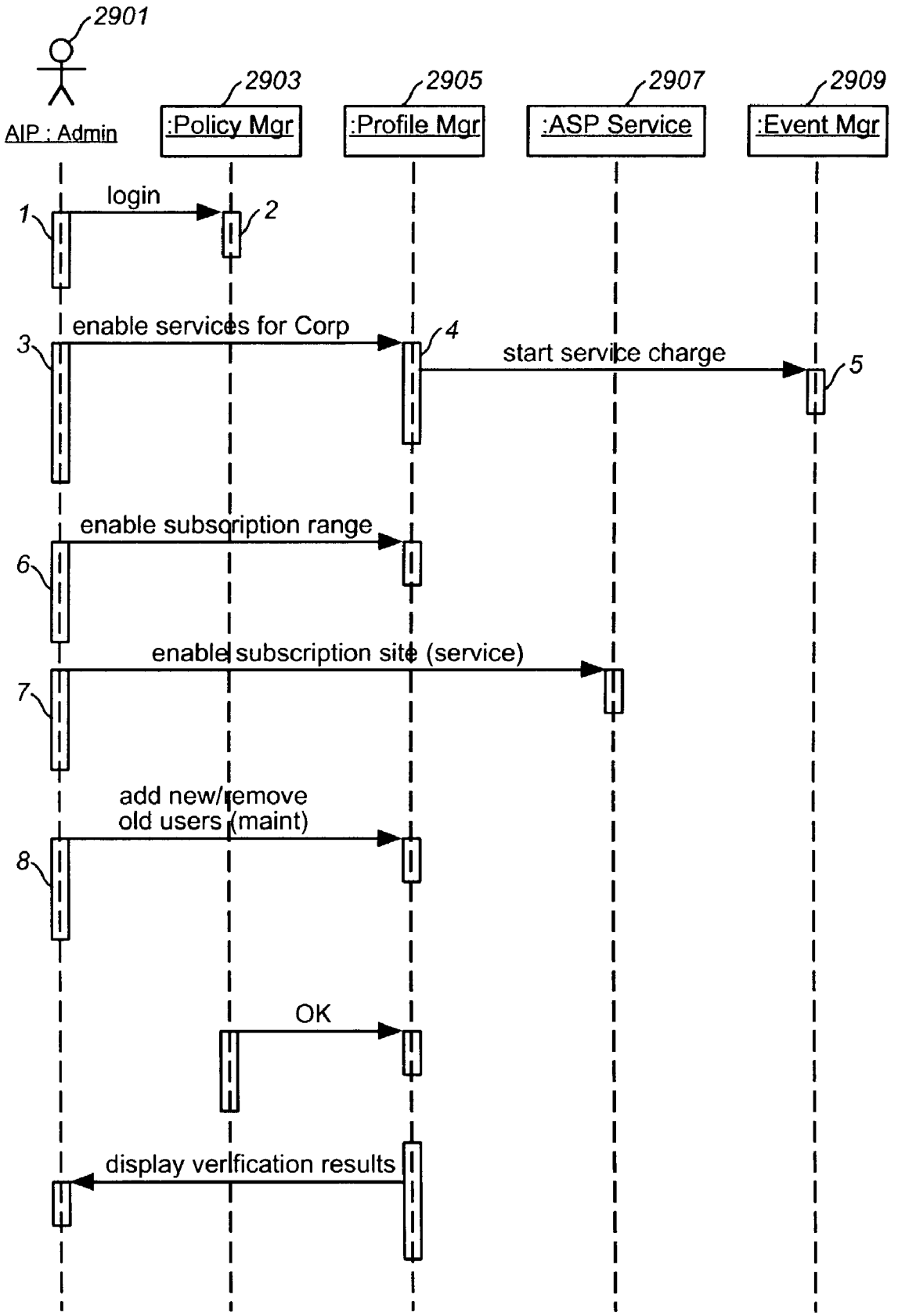
2901
AIP : Admin
2903
:Policy Mgr
2905
:Profile Mgr
2907
:ASP Service
2909
:Event Mgr
login
1
2
enable services for Corp
3
4
start service charge
5
enable subscription range
6
enable subscription site (service)
7
add new/remove
old users (maint)
8
OK
display verification results

FIG. 29

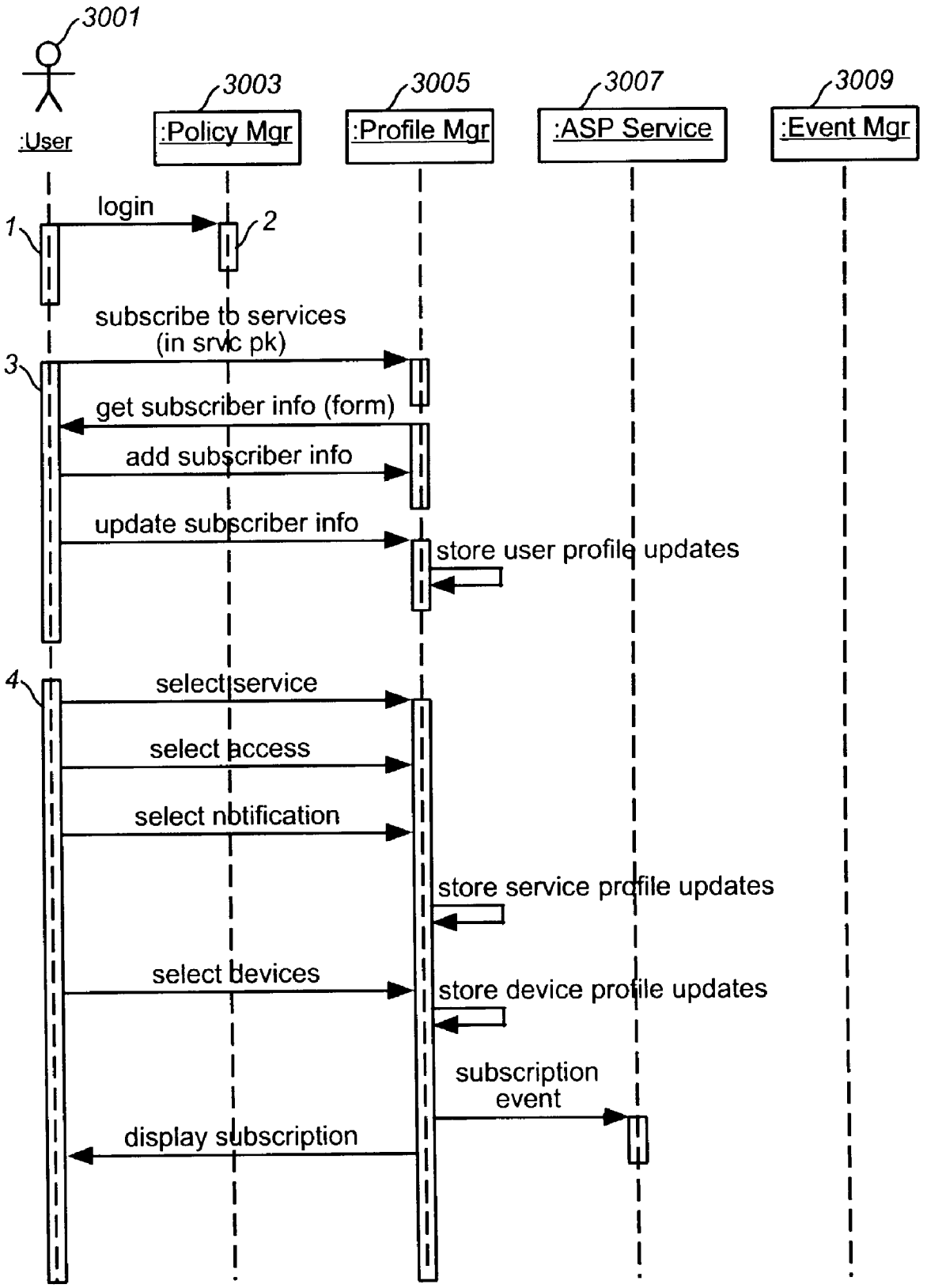
3001
:User
3003
:Policy Mgr
3005
:Profile Mgr
3007
:ASP Service
3009
:Event Mgr
1
login
2
subscribe to services
(in srvc pk)
3
get subscriber info (form)
add subscriber info
update subscriber info
store user profile updates
4
select service
select access
select notification
store service profile updates
select devices
store device profile updates
subscription
event
display subscription

FIG. 30

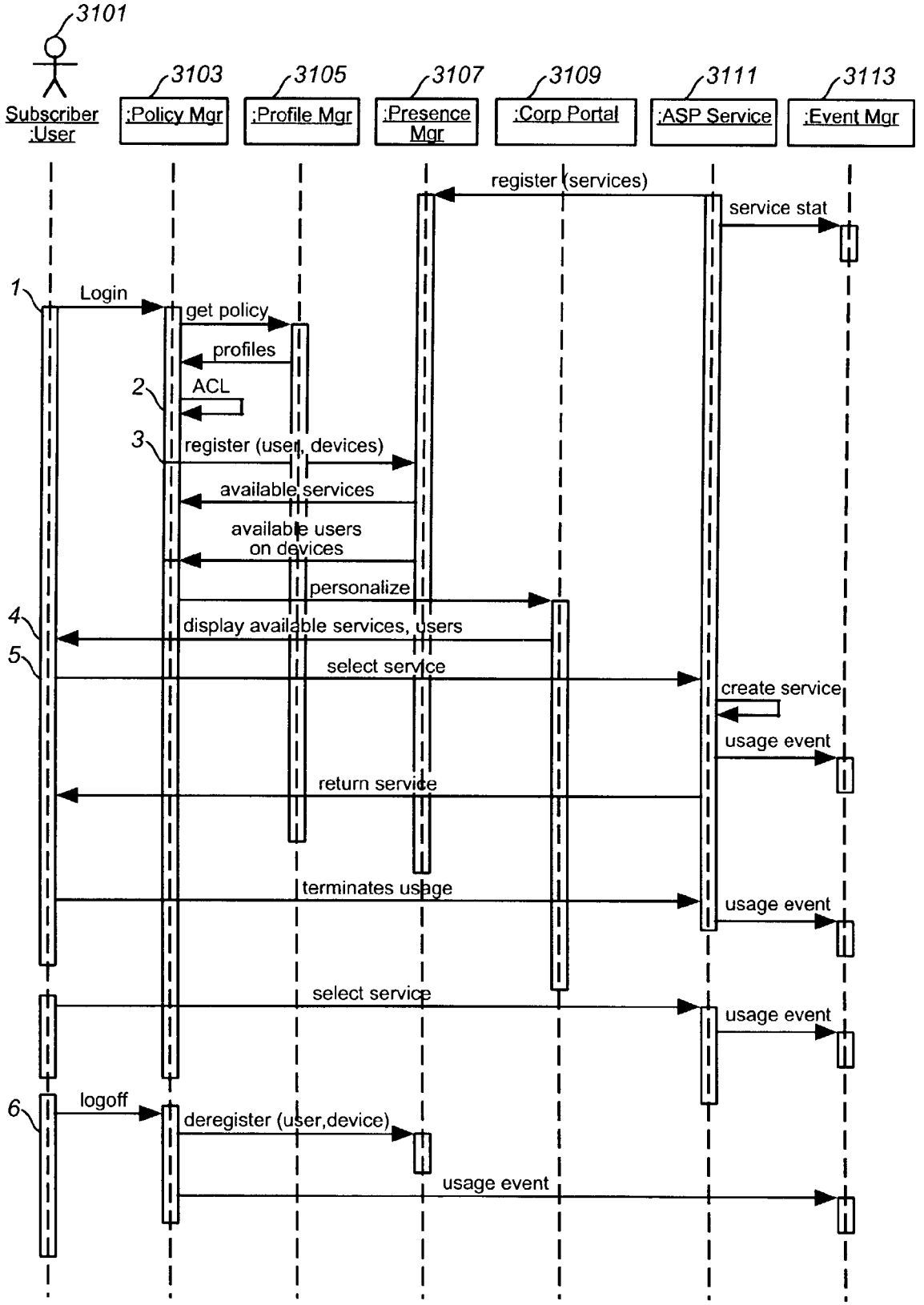
3101
Subscriber :User
3103
:Policy Mgr
3105
:Profile Mgr
3107
:Presence Mgr
3109
:Corp Portal
3111
:ASP Service
3113
:Event Mgr
register (services)
service stat
1
Login
get policy
profiles
2
ACL
3
register (user, devices)
available services
available users on devices
personalize
4
display available services, users
5
select service
create service
usage event
return service
terminates usage
usage event
select service
usage event
6
logoff
deregister (user,device)
usage event

FIG. 31

APPLICATION INFRASTRUCTURE PLATFORM (AIP)

RELATED APPLICATIONS

This application is related to, and claims the benefit of the earlier filing date under 35 U.S.C. §119(e) of, U.S. Provisional Patent Application (Ser. No.: 60/341,222), filed Dec. 20, 2001, entitled "APPLICATION INFRASTRUCTURE PLATFORM (AIP)", the contents of which are hereby incorporated by reference in their entirety.

FIELD OF THE INVENTION

The present invention relates to Information Technology (IT) systems and services, and more particularly to an Application Infrastructure Platform (AIP) providing comprehensive services including integrated Application Service Provider (ASP), Independent Service Vendor (ISV), and the like services, software and hardware.

ACRONYMS

The written description uses a large number of acronyms and technical terms to refer to various systems, services, and components. Although generally known, use of several of these acronyms or terms is not strictly standardized in the art. For purposes of this discussion, acronyms and terms therefore will be defined as follows:

AAA	Authentication, Authorization, and Accounting
AIP	Application Infrastructure Platform
API	Application Programmers Interface
AS	Application Servers
ASP	Application Server Provider
ATM	Asynchronous Transfer Mode
BR/FW	Border Router/Firewall
BSS	Business Support Services
B2B	Business-to-Business
B2C	Business-to-Consumer
CAD	Computer Assisted Design
CCB	Change Control Board
COTS	Commercial Off The Shelf
CPE	Customer Premise Equipment
CRM	Customer Rules Management
CS	Communication Server
Dev Env	Development Environment
DNS	Domain Name System
DMZ	Demilitarized Zone
EAI	Enterprise Application Integration
EJB	Enterprise Java Beans
ERP	Enterprise Resource Planning
GPS	Global Positioning System
GW	Gateway
HDML	Handheld Device Markup Language
HR	Human Resources
HSP	Hosting Service Provider
HTML	Hyper Text Markup Language
HTTP	Hyper Text Transfer Protocol
IASA	Integrated Application Support Architecture
IDC	Internet Data Center
IDS	Intrusion Detection System
IED	Internet Enabled Devices
ISP	Internet Service Provider
ISV	Independent Service Vendor
IT	Information Technology
JSP	Java Server Pages
LAN	Local Area Network
LDAP	Lightweight Directory Access Protocol
MOM	Message Oriented Middleware
MTA	Message or Mail Transfer Agent
NAT	Network Address Translation
NAS	Network Attached Storage

-continued

NOC	Network Operations Center
OSS	Operational Support System
PBX	Private Branch Exchange or Automatic Switch
POTS	Plain Old Telephone Service
PDA	Personal Digital Assistant
PKI	Public Key Infrastructure
PSTN	Public Switched Telephone Network
QoS	Quality of Service
RA	Regional Authority
RDBM	Relational Database Management
RE	Rules Engine
RFP	Request for Proposal
RS	Redirect Server
RTP	Real Time Protocol
SAN	Storage Area Network
SCE	Service Creation Environment
SCM	Service Creation Management
SI	System Integration or System Integrator
SIP	Session Initiation Protocol
SLA	Service Level Agreement
SME	Small to Medium Enterprise
SOC	Security Operations Center
SS7	Signaling System 7
STT	Speech to Text
SW	Switch
TDM	Time Division Multiplexing
TTS	Text to Speech
UA	Ubiquitous Access
UA/VB	Ubiquitous Access Voice Browser
UM	Unified Messaging
VB	Voice Browser or Voice Browsing
VLAN	Virtual LAN
VoIP	Voice over Internet Protocol
VPN	Virtual Private Network
WAP	Wireless Application Protocol
WBIC	Web Based Interaction Center
WFM	Work Flow Management or Work Flow Manager
WFM/RE	Work Flow Manager and Rules Engine
WML	Wireless Markup Language
WS	Web Server
XML	eXtensible Markup Language
XPM	X (= user, customer, service, device, security, etc.) Profile Management

BACKGROUND OF THE INVENTION

The evolution of the information technology (IT) industry has progressed from Internet Service Providers (ISPs), to Application Service Providers (ASPs), to Independent Service Vendors (ISVs), and related providers. Application Service Providers (ASPs) offer their customers a mix of custom services, off-the-shelf applications, and Independent Service Vendor (ISV) services. The end users of the ASP services are the employees or customers of the ASP corporate customers. Each ASP is a unique, one-off implementation, although the ASPs share architectures that are roughly identical. An ASP independently solves the same set of problems associated with running their business, such as service creation, provisioning, policy management, security, Customer Resource Management (CRM), directory service, access, and billing.

Concurrent with this evolution, global services companies are offering varied and comprehensive digital and e-business services; these services are similar to those of the ASP and ISV services. In many instances, such companies are also engaged in ongoing research and development activities, addressing problems on a repetitive basis and developing a portfolio of legacy technology.

The number of core features required by new applications has grown dramatically, thus requiring greater expertise in many new areas. Traditionally, common system development was predominantly confined to communication, alarming, billing, and support issues. These new areas, for example,

include comprehensive security for even the smallest Internet application, the understanding and implementation of many more protocols for ubiquitous access, and a common profile management system across applications to implement a "Single-Sign-on" system.

Thus there is a need for a vehicle to enable more efficient use of available capabilities and expertise and, at the same time, effectively provide a wide variety of selectable capabilities and services of a dynamic and scalable nature.

SUMMARY OF THE INVENTION

These and other needs are addressed by the present invention in which an Application Infrastructure Platform (AIP) supplies applications and services (as well as content) to the ASPs. These applications and services are customized by the ASP for rent or resale to its customers. The AIP may aggregate its own applications and services with those of both external ASPs/ISVs and its own ASPs into an AIP's Product Catalog. The aggregate AIP Product Catalog may then be subscribed to by its ASPs. In an exemplary embodiment, the AIP delivers applications and services to the ASPs, which pass these services through to their end customers (or consumers). The AIP also provides common management services to one or more ASPs. The AIP advantageously relieves the ASPs and other service providers (SPs) of the need to be experts in building an infrastructure and allows the ASPs to focus their efforts on developing their market niche solutions.

In one aspect of an embodiment of the present invention, a method for providing services and content over a network is disclosed. The method includes presenting services including application level services common to a plurality of providers that offer the common services to a plurality of users corresponding to the plurality of providers, the services being accessible via the network. The method also includes integrating a service specific to one of the plurality of the providers, and selectively presenting the specific service associated with the one provider to another one of the plurality of providers.

In another aspect of an embodiment of the present invention, a communication system for providing services and content is disclosed. The system includes a platform that is configured to present a catalog of services including application level services common to a plurality of providers that offer the common services to a plurality of users corresponding to the plurality of providers, wherein one of the plurality of the providers provides a specific service. Also, the platform is configured to integrate the specific service and to selectively present the specific service associated with the one provider to another one of the plurality of providers.

In one aspect of an embodiment of the present invention, an approach provides an application infrastructure platform (AIP) having an ASP environment including multiple ASP systems which provide application services to customer entities for use in end user devices. In interactive conjunction with this ASP environment, there is a common services environment including hardware and software and management systems. The ASP systems are provided with applications and integrated application, back-office, and management services used by the ASP systems in delivering their application services to the customer entities for use in end user devices.

In another aspect of an embodiment of the present invention, an approach provides an application infrastructure platform (AIP) having an ASP environment with multiple ASPs providing application services to customer entities, and a common services environment providing applications and integrated application, back-office, and management services to the ASPs. The ASPs are connected by a service bus to the common services environment and are connected by a ubiquitous access system to a data network system and to the customer entities. The common services environment includes a profile management system, an enrollment and subscription system, a billing system, workflow management and rules engine systems, and a customer rules management (CRM) system.

In another aspect of an embodiment of the present invention, an approach provides an application infrastructure platform (AIP) that serves to aggregate services provided by the AIP and ASPs allowing the services to be offered as customized packages to other ASPs and their customers. The AIP leverages the service aggregation and then acts as a service broker by facilitating the delivery of the service from the source to a third party ASP and their customers.

In another aspect, the present invention provides an application infrastructure platform (AIP) that is capable of delivering any service through any device and/or media conditioning needed to provide that service to the end customer.

In yet another aspect of an embodiment of the present invention, an approach is disclosed that relates to an application infrastructure platform (AIP) associated with an interactive development and test bed environment for conducting product and service development. The AIP includes an ASP environment that has multiple ASPs providing application services to customer entities, and a common services environment that includes hardware and software and provides applications and integrated application, back-office, and management services to the ASPs. In this combination the hardware and software that is provided to the ASPs includes hardware and software from the development and test bed environment that has been incorporated into the common services environment, and is available for use by both the ASPs and development environment.

Still other aspects, features, and advantages of the present invention are readily apparent from the following detailed description, illustrating a number of particular embodiments and implementations, including the best mode contemplated for carrying out the present invention. The present invention is also capable of other and different embodiments, and its several details can be modified in various obvious respects, all without departing from the spirit and scope of the present invention. Accordingly, the drawings and description are to be regarded as illustrative in nature, and not as restrictive.

BRIEF DESCRIPTION OF THE DRAWINGS

The present invention is illustrated by way of example, and not by way of limitation, in the figures of the accompanying drawings and in which like reference numerals refer to similar elements and in which:

FIG. **1** shows a simplified block diagram depicting the progression from self contained ASPs to an integrated AIP architecture, in accordance with an embodiment of the present invention.

FIG. **2** is a conceptual embodiment of an Application Infrastructure Platform (AIP) Service framework, according to an embodiment of the present invention.

FIG. **3** is a block diagram of an ASP configuration.

FIG. **4** is a block diagram of a centralized AIP configuration, according to an embodiment of the present invention.

FIG. **5** is a block diagram of Internet Data Centers employing the AIP platform, according to an embodiment of the present invention.

FIGS. **6**A and **6**B are block diagrams of a Distributed AIP Deployment Configuration along with Proprietor systems

which may be associated and used with the AIP, according to embodiments of the present invention.

FIG. **7** is a block diagram of a system for providing Ubiquitous Access, according to an embodiment of the present invention.

FIG. **8** is a diagram of an exemplary deployment of an AIP and its associated environments, according to embodiments of the present invention.

FIGS. **9**A and **9**B are diagrams showing the scalability of AIP deployment, according to an embodiment of the present invention.

FIG. **10** is a diagram of the processing path from a customer site to legacy systems in an AIP model, according to an embodiment of the present invention.

FIG. **11** is a diagram of a logical view of typical corporate customer infrastructure.

FIG. **12** is a logical diagram of network components involved in voice calls in the operation of the AIP, according to an embodiment of the present invention.

FIG. **13** is a diagram of a Proprietor Voice Portal Architecture for enabling voice browsing in AIP operation, according to an embodiment of the present invention.

FIG. **14** is a logical diagram of the elements involved in providing edge server service in the environment of the AIP methodology, according to an embodiment of the present invention.

FIG. **15** is a logical diagram of an ASP model, according to an embodiment of the present invention.

FIG. **16** is a diagram of a logical view of AIP Common Services, according to an embodiment of the present invention.

FIG. **17** is a diagram of a service management system employed in an AIP environment, according to an embodiment of the present invention.

FIG. **18** is a diagram showing the relationship of an Integrated Applications Support Architecture (IASA) with the Proprietor, according to an embodiment of the present invention.

FIG. **19** is an event diagram of a Global Service Shared Revenue scenario, according to an embodiment of the present invention.

FIG. **20** is a relational diagram of the hierarchy of an AIP, according to an embodiment of the present invention.

FIG. **21** is a diagram of a Development Environment (DE) and Testbed (TB), according to one embodiment of the present invention.

FIG. **22** is a diagram of the operational relationships associated with Administration and Support, according to an embodiment of the present invention.

FIG. **23** is a diagram of a process for setting up of an AIP, according to an embodiment of the present invention.

FIG. **24** is a diagram of a self-subscription process and use of AIP services by an end user, according to an embodiment of the present invention.

FIG. **25** is an event diagram showing the creation of an AIP, according to an embodiment of the present invention.

FIG. **26** is an event diagram showing the addition of an ASP to an AIP, according to an embodiment of the present invention.

FIG. **27** is an event diagram showing the enrollment of a customer, according to an embodiment of the present invention.

FIG. **28** is an event diagram showing an ASP adding service packs to a corporate portal, according to an embodiment of the present invention.

FIG. **29** is an event diagram showing a customer capable of managing user subscription, according to an embodiment of the present invention.

FIG. **30** is an event diagram showing a process in which a customer enables users to self-subscribe, according to an embodiment of the present invention.

FIG. **31** is an event diagram showing an end user accessing a service, according to an embodiment of the present invention.

DESCRIPTION OF THE PREFERRED EMBODIMENT

A system, method, and apparatus for providing an Application Integration Platform (AIP) are described. In the following description, for the purposes of explanation, numerous specific details are set forth in order to provide a thorough understanding of the present invention. It is apparent, however, to one skilled in the art that the present invention may be practiced without these specific details or with an equivalent arrangement. In other instances, well-known structures and devices are shown in block diagram form in order to avoid unnecessarily obscuring the present invention.

FIG. **1** shows an exemplary environment in which multiple discrete ASPs are integrated into an AIP environment. Application Service Providers (ASP) **102** have arisen as service vendors that provide web hosting services, including co-location services and hosting to customers. The ASPs **102** are attractive because they offer specialized value-added services to the employees of corporations through the corporate portal which they, together with the corporation (who is their customer), implement. Further, the ASPs **102** frequently use Internet Service Vendors (ISV) to augment their own offerings presented as blended services through a unified corporate portal. Internet Service Vendors (ISVs) offer unique collections of services over the Internet, such as business automation tools on a leased or per use basis. Unlike ASPs **102**, ISVs generally are not an Internet hosting service.

An ASP **102** may customize and lease its own (or AIP-subscribed-to) applications and services to one or more of its customers. The ASP's customers are typically corporate entities, but may also include individual consumers. These corporate entities include mostly Small and Medium Enterprises (SME). In addition, the ASP **102** leases corporate portals to corporate customers. The corporate portal is customized by the ASP **102** to appear as the customer's corporate portal. The corporate customer rents their applications and services from the ASP **102** for consumption by their employees. The ASP **102** also may rent eCommerce applications to corporate customers to establish their own eCommerce site. Further, the ASP **102** may be its own eCommerce site to either Business-to-Business (B2B) or Business-to-Consumer (B2C) users.

The services offered through a corporate portal have also grown more robust. Instead of purchasing licenses (seats) for employees to use various software packages that are installed on their personal computers, many corporations find it less burdensome to lease software on a per use basis. Commonly used products such as MS EXCEL and WORD as well as a host of other products are now available for lease as thin or thick clients (as appropriate for the application) through corporate portals.

The ASP **102**, to the extent of its financial and operational abilities, independently provides its own Business Support Services (BSS) **104**, Operational Support System (OSS) **106**, Content **108**, Applications **110**, and Access **112**. By way of example, the BSS **104** provides various business functions, such as billing, accounting, and provisioning. The OSS **106**,

for example, supplies network management functionalities as well as a trouble ticketing system. The Access **112** includes communication interfaces and systems to provide ubiquitous access, which is desired by most ASPs.

By and large, independent ASPs **102** are unable to afford development and maintenance of these systems **104**, **106**, **108**, **112**. When such an ASP **102** is operated in the environment of an Application Infrastructure Platform (AIP) **114**, the AIP **114** provides BSS **116**, OSS **118**, Content **120**, and Access **122** from a well-stocked common source in systems existing in the AIP **114**. The individual ASPs **102** operate with the use of these Common Services in addition to their individual customized services. Further, in an exemplary embodiment, the individual ASPs **102** may make available some of their custom services to other ASPs **102** operating within the AIP **114**. Through this unique combinational arrangement, the capabilities of each ASP **102** are significantly extended.

The AIP **114**, according to one embodiment of the present invention, is conceptually a provider of comprehensive services for ASPs **102**—i.e., an "ASP" for ASPs. In this manner, efficiencies can be attained with respect to development cost and access to expertise. The AIP **114** provides a complete beginning-to-end capability to host ASPs **102**. The AIP **114** assumes the role of ISP in that it provides an ASP **102** with access to the Internet. Also, the AIP **114** has the role of hosting web sites in that it offers web-hosting centers to house hosted and co-located servers for ASPs **102** in which it provides rack space, power, security, and network connectivity. In the role of an ASP **102**, the AIP **114** provides a collection of applications and services to the hosted ASPs **102**; the ASPs **102** in turn may repackage and resell to their customers as corporate portals. These packages include e-Business, e-Tailing, human relations, office automation, and others that are more cost-effectively rented than purchased by the ASP customer.

Additionally, the AIP **114** supports a development environment that is accessible from, a public data network, such as the Internet, to support development by a system integrator (SI), ASPs **102**, and ISVs. The AIP **114** provides a Test Bed to integrate the solutions into a test AIP environment and for staging solutions and updates for deployment to AIPs **114** over the Internet.

The AIP **114** combines (i.e., integrates) applications, services, content to ASPs **124**. By way of example, these AIP capabilities may include Profile Management, Billing, Provisioning, Customer Care, Communications, Presentation (Web), and Application Deployment. The users of the AIP may include (1) the Proprietor's personnel (e.g., engineers), and (2), the Proprietor's customers, who buy and use it to reduce their infrastructure costs by having standard access to the AIP unique suite of capabilities. These applications and services are customized by the ASP **124** for rent or resale to customers of the ASP **124**.

The AIP **114** may also aggregate its own applications and services with those of both external ASPs/Internet Service Vendors (ISVs) and its own ASPs into a "Product Catalog." The aggregate AIP Product Catalog may then be subscribed to by its ASPs **124**. In other words, the AIP **114** delivers applications and services to the ASPs **124**, which pass these services through to their end customers (or consumers). Furthermore, the AIP **114** provides common management services to one or more ASPs **124**, thereby sharing the management costs among multiple ASPs.

The AIP **114** may employ a best of breed (i.e., select-the-best) approach to implement applications and services, which may be off-the-shelf, to populate an infrastructure. The AIP **114** integrates applications and services together by binding them in a loosely coupled arrangement through the use of multiple technologies including, for example, message busses, Enterprise Java Beans (EJB), Workflow Managers (WFMs), and Rules Engines (REs). Message busses allow messages to be sent once and be received by many recipients; this has the added benefit that network traffic is reduced because messages are transmitted only once on a subnet. Enterprise Java Beans are encapsulated Java components that provide common capabilities such as transaction management, security, and resource pooling placed on servers other than a web server. This approach, thus, minimizes from the loading on the web server by load balancing across other servers. Workflow Managers support the automation of complex multi-step tasks, which may be tedious manual processes. Rule Engines provide mechanisms for determining when an activity should be initiated based on monitored events. Rules Engines and Workflow Management engines work cooperatively to determine the appropriate course of action in response to an event.

Users of the unique AIP platform may be categorized into two communities: global digital service providers—one of which may be the AIP Proprietor; and independent ASPs and XSPs, who use the AIP platform and service. The Proprietor may utilize the AIP **114** not only to serve the ASP customers, but also internally to support its own ASP and ISV services, and own development and test activities. The AIP **114** may also provide the ASPs with a way to reduce their infrastructure costs as well as a mechanism to obtain standard access to the Proprietor's unique broad range of capabilities. In addition, the ASPs **124** may use the AIP **114** for development purposes in much the same manner as the Proprietor.

Thus, the AIP **114** supplies both the Proprietor and ASPs with common services to avoid redundancy in new projects (i.e., products and services), and may also use the AIP **114** to make new services available. Because the AIP **114** provides both the software and hardware infrastructure, there are economies of scale that arise from the use of shared resources that allow the AIP **114** to deliver service at a reduced cost. The AIP **114** also provides services at a reduced service delivery cost by billing the ASP on a pay-as-you-go basis, rather than having the ASP purchase software and hardware up front.

The Proprietor, through the AIP **114**, may act as an "Application Infrastructure Provider" by offering a tested and integrated environment with an infrastructure that supports the technical and business processes that underlie ASP services. The AIP **114** provides the core for "gluing" services together, and offering common services and applications that can be used in conjunction with each other and ASP-specific capabilities. The AIP **114** also provides the Proprietor the opportunity to leverage the platform to support other Proprietor projects.

As evident from the above discussion, the AIP **114** creates a unique extension of an evolutionary trend in the business use of the Internet, by combining application services in form of a product catalog. Initially, access to the Internet was provided through Internet Service Providers (ISP). The ISPs provide dial-up access, email, and general access to the Internet. These ISPs also provide web hosting services so that custom web sites could be developed and accessed. As a result, corporations have employed ISPs to provide Internet access and have developed their own internal web sites, some of which were "Internet facing" and others "employee facing." Through the Internet facing sites the corporations offer corporate information, goods, and services. Through the employee facing sites, they provide employees with a variety of self-service packages, access to human resources data, benefits data, and information on stock purchase and sales. These employee-facing sites were often not accessible from

the public Internet, which limited employee access to personnel using computers in the corporate Internet.

Other corporations, without the IT assets or technical skill to implement their own internal sites, outsourced the operation of their internal web sites. These corporate web sites (or corporate portals) provide the employees with a wide variety of services including those that are provided by third party Internet Service Vendors (ISV).

The AIP architecture provides a number of advantages, such as scalability, cohesion and coupling. Under this arrangement, the ASP functionality, which is highly cohesive, is tightly coupled to common services, which is also highly cohesive. These highly cohesive areas may be successfully loosely coupled via a backbone.

FIG. **2** provides a simplified conceptual depiction of the AIP Service Framework. As shown, the services available in the AIP are collected into seven logical containers **101-113**. Two of these containers, Infrastructure and Resources, possess features and services that support and facilitate the operation of all AIP containers. The remaining five containers are described in order from the web-facing Service Delivery container **105** on the left, to increasingly private services on the right.

End users access the AIP through the Service Delivery container **105**, which provides the functionality to transform services and content for the end user. The Integration container **107** provides the "glue" (i.e., middleware and interfaces) among the AIP Applications **111**, Application Services **109**, Support Services **113**, and Service Delivery **105** (i.e., service bus), through the use of Message Oriented Middleware (MOM), Web Services and related technologies. The service bus **105** provides both point-to-point delivery of messages and publishes and subscribes delivery in either reliable or unreliable modes, for example.

The Application Services container **109** includes services that are shared by most of the AIP applications; such services are AIP supportive and designed for high reuse. The Application container **111** includes end-user applications that are aggregates of common AIP and unique ASP services. The Support Services container **113** includes business and operational services. The functions of these five service containers **105**, **107**, **109**, **111**, and **113** are more fully below.

To deliver services and data to end user devices, the Service Delivery container **105** performs transformation, presentation, and delivery functionalities. Specifically, the Service Delivery container **105** supports Ubiquitous Access (UA) technologies, which enable access from a multitude of networked devices: Personal Digital Assistants (PDAs), Web browsers, network appliances, Session Initiation Protocol (SIP) phones, and plain old telephone service (POTS) phones. For example, Ubiquitous Access provides the ability to access web pages using a variety of Internet enabled devices (IED); Ubiquitous Access maps web page content onto the small IED displays in such a way as to provide a content reduced, yet useful interaction.

Further, Ubiquitous Access enables wireless applications from general web site content for eCommerce activities as well as general surfing. Mobile wireless devices (e.g., smart phones and PDA combinations) may be used to make localized purchases via, for example, BLUETOOTH technology, ranging from event tickets to exit booth-shopping charges. These devices may employ data interfaces that are supported by IEEE 802.11b wireless LAN. Wireless LANs may be readily implemented in private as well as public venues (e.g., home offices, airports, shopping malls, etc.).

Portals, as part of the Service delivery container **105**, provide customized content to the end user; the content can contain personal, local, group, or corporate information. That is, portals can have a specific focus, such as personal portals, business-to-business (B2B) portals, business-to-employee (B2E) portals, and wireless portals. Portals filter, aggregate, and present the data to the end user.

Further, the Service Delivery container **105** also includes X-form, voice browser, SIP, and streaming content. Traditionally, communicating programs have required that there be a relatively detailed and perhaps bit-level understanding by developers of the structure of the messages that are exchanged by the programs. As technology, and in particular, technologies supporting web-based computing, has evolved, better approaches to understanding the message structure have been developed. For example, Extended Meta-Language is a tagged field specification that allows messages to be self-defining. Thus, as long as the programmers understand what the content of the message will be, then programs can be written to recognize the XML encoding and to locate the data expected. VXML extends this capability to include the encoding of voice so that a web page, for instance, can include references to applets, servlets, and EJBs that return voice content that is played to the user from the displayed web page. XML and VXML provide capabilities fundamental to the generalization of web access through ubiquitous access.

A voice browser provides a voice path using automatic and natural language speech recognition to create an interface to web and some voice compatible applications. Sample applications range from Interactive Voice Response (IVR) used to access personalized services (e.g., bank accounts) and intelligent directory searches (e.g., closest locations), to natural speech used to query a site for Commerce search, selection, and transactions. The coupling of UA and the voice browser (i.e., HTML filtering/conversion to VXML) enables the access of web sites. SIP is an enabler of Voice Portals, which are specialized applications that are aggregated into a portal of voice accessible services and applications. Voice portals may be accessed through PSTN circuits as well as VoIP communications systems.

In an exemplary embodiment, the Integration container **107** is supported by Enterprise Application Integration (EAI) technologies, which address integration of applications using messaging technology, including a message bus, a Workflow Manager (WFM), and a Rules Engine (RE). The messaging supports point-to-point and publish and subscribe type messaging with varying quality of service (QoS) or bandwidth levels. According to one feature of the present invention, the sequential rules of a process, or Workflow Management (WFM), are defined and stored centrally in the Rules Engine instead of embedded in code throughout the system. Work Flow Management automates the sequence of actions necessary to complete a unit of work. A specific work flow is often initiated when a rule is fired in a rules engine. The Rules Engine evaluates events using a rule base and, when the criteria for a rule is met, fires the rule; rule firing can result in the initiation of a specific work flow. Integration also includes version control of services within the execution environment and joining multiple directory servers by using a Meta directory.

The Application Services container **109** provides common services for the end-user applications, such as Profile Management (xPM), Transaction Management, product cataloging, Application Management, Personalization, and Policy management. A product catalog includes the services offered by an ASP; thus, when the sum of ASP products are aggregated, the result is an aggregate product catalog. Profile Management supports the creating, editing, and deleting of customer profile information (e.g., customer, group, enterprise,

and device information). Distributed transaction management allows applications to perform reliable transactions on AIP data stores. The personalization engine provides customized dynamic content based on predefined inference rules and customer usage habits.

The Applications container **111** utilizes the Application Services **109** to deliver applications to the end-users. This Applications container **111** supports eCommerce relationships, such as business-to-business (B2B) and business-to-consumer (B2C). These relationships are supported with product catalogs for the presentation and management of products, shopping carts, order management, and order processing. Unified Messaging is also a part of the Applications container **111** and provides one common format for the transmission and storage of messages such as email, voice mail, fax, and video. The Applications container **111** also includes Content Management for acquiring and aggregating of static and dynamic content, such as news, weather, stock quotes, and syndicated feeds. Directory services are also supported by the Applications container **111**; for example, corporate directories may be employed to allow the lookup of employee information based on various search criteria. The AIP, through the Applications container **111**, can also support a variety of business applications; e.g., GREAT PLAINS, PEACHTREE, QUICKEN, MICROSOFT OFFICE, and QUICKBOOKS. These business applications are also examples of applications that could be made available by ASPs.

Additionally, the AIP includes a Support Services container **113** to provide operational and business support components from existing systems of the AIP Proprietor (Proprietor). The container **113** includes OSS functions, such as Trouble Ticketing for defect and problem reporting and management. Another OSS function is Service Level Agreements (SLA) Management, which is supported through application monitoring and reporting. That is, Service Level Agreement Management monitors the performance of the AIP platform against criteria specified in various service level agreements and initiates actions when exceptions to agreements are detected. The SLA performance criteria may be represented by rules in a Rule Engine, and the exception action is specified in a workflow.

Other OSS functions include system management, network management, and host management. The Support Services container **113** further provides BBS functions, which include provisioning, billing, and order entry. Provisioning of new customers, services, devices, and networking are done through Provisioning Management. Billing of AIP customers is done through the Billing system. The AIP supports the ability to provide billing in several ways. The ASP can receive a detailed bill, which it then breaks down to individual corporate portals and re-bills to its corporate customers. In addition, the AIP can perform the breakdown for the ASP together with re-branding of services and provide a summary to the ASP and bill the ASPs corporate customers directly for the ASP. Also, the Support Services container **113** includes a data warehouse, as well as decision support functions.

As seen in FIG. **2**, the Infrastructure services layer **101** encompasses fundamental functions that are required to run other services, such as security, databases, and gateways. Exemplary security functionality includes firewalls in a DMZ configuration, authentication and authorization, access control, and Virtual Private Network (VPN) connections to customers. Virtual Private Networking provides the ability for end users to access data stored in the AIP across the public Internet with minimum risk to data integrity and privacy.

Additionally, advanced security functions may include Public Key Infrastructure (PKI), Certificate Authorities for strong authentication for applications needed by B2Bs, Intrusion Detection Systems (IDSs), and Antivirus Scanning, as well as include distributed firewalls. The Intrusion Detection Systems recognize an unauthorized access ("hacker") attempt and to direct the attempt to a decoy system where unauthorized actions are recorded for post analysis and prosecution. The Infrastructure services layer **101** also supports the Lightweight Directory Access Protocol (LDAP), which enables highly scalable, read mostly, logically centralized, and physically distributed access to directory services. The layer **101** also has Gateways (GW) for providing protocol conversion and access control functionality needed to integrate diverse PSTN, Wireless, and Internet networks.

Below the Infrastructure services layer **101** is the Resources layer **103**, which includes end user devices, platforms, data storage, and development and execution environments that are needed to field the AIP. These end user devices, for example, may include telephones, PCs, IP Appliances, Pagers, Faxes, PDAs, and wireless mobile smart phones (with PDA functionality). The platforms include routers, capacity on demand midrange servers, and various types of network elements. Data Storage includes Network Attached Storage (NAS), which are used for Customer Edge Server storage, and Storage Area Networks (SAN) that provides highly available, scalable, and secure Internet Data Center (IDC) storage. The Storage Area Network may be a dedicated switched fiber channel local area network (LAN) that is used exclusively to access disk storage, providing the ability to manage disk space globally across a suite of processors and to serve additional storage on demand.

The AIP system and methodology combines a development and execution environment into one set of capabilities to support both aspects of the operations of its customers, such as ASPs. The development environment provides the tools, component libraries, and Software Development Kits (SDKs) needed to rapidly build applications to leverage common services. The execution environment (ExeDev) provides dynamic management of highly available, scalable, and secure processes across multiple clusters of processors, including capacity-on-demand.

As evident from the above discussion, the AIP platform provides an advanced infrastructure and development environment, supplies the technical and business processes, and presents a tested and integrated environment for offering applications from a network. In addition, the AIP platform furnishes a complete, out-of-the-box ASP platform that delivers the services and features needed by an ASP for its customers.

The AIP infrastructure enables a Proprietor to service a number of different customers: Independent Service Vendors (ISVs), ISV-ASPs, ASP Resellers, ASP Aggregators, Enterprises with Proprietor Hosting, and Enterprises with Internal Hosting. An Independent Service Vendor typically seeks to offer its products through an ASP model, but does not wish to be an ASP. For example, a developer of business accounting software might convert that software so that it could be used as a service. The developer may then look for an ASP and a reseller to market, sell, and support that service.

An ISV-ASP refers to an Independent Service Vendor that aims to deliver its products through an ASP model. For example, a developer of human resource software might convert that software to an ASP format, host the application through the Proprietor's hosting, then market, sell, and support that software to the ISVs' new and existing customers. An ASP Reseller refers to an ASP that focuses on the mar-

keting and support of specific applications developed by third parties; such an ASP does not have development expertise of its own. Rather, the ASP Reseller enters into reseller agreements with ISVs, and then delivers services to customers based on the licensed software. For example, an ASP Reseller might license software that performs calendar management, contact and sales tracking, and expense management. The ASP Reseller would learn the applications so that it could market them and provide support to business sales forces.

An ASP Aggregator refers to an ASP that goes one step beyond the ASP Reseller. This ASP develops interfaces and integrations between the applications it licenses to create application bundles with additional functionality. For example, an ASP Aggregator might license software that does calendar management, contact and sales tracking, and expense management. This user would learn the applications, so that it could market them and provide support to business sales forces. But, then it would develop communications between the applications to link expense reports to sales calls, create sales records automatically when calendar entries are made, and deliver productivity reports that combine the data of all three products. An Enterprise with Proprietor Hosting refers to a business that seeks to deliver applications to its workforce through an ASP model; exemplary applications may include commercial applications such as the MICROSOFT OFFICE suite of office productivity tools. The ASP model gives the enterprise better control over distribution and updates. Other applications may be internally developed applications. For example, an architectural firm may use an ASP model to deliver basic office software and CAD packages to staff. They may also use it to deliver internally developed job costing and RFP response applications.

An Enterprise with Internal Hosting refers to a business that delivers applications to its workforce using an ASP model. The ASP model provides the enterprise better control over distribution and updates. It is noted that applications may be internally developed by the Enterprise. The enterprise is typically a business that is sufficiently large to want to host and support its applications in its own data centers over its own network.

Through the AIP, the Proprietor can offer a value (or advantages of use) proposition to each of the various types of customers. Of the elements of the value proposition that follows, some elements are common to all customers, while other elements are unique to particular customers. Accordingly, the AIP permits ASPs to deliver services in a cost effective manner, while providing true global reach with the size and capability to support the unique needs of their customers.

In addition, the AIP platform provides a developer environment, whereby the ASPs and ISVs are supplied with the tools, re-use software repositories, workspace, and support they need to quickly prepare their applications for service delivery. The AIP platform advantageously saves the ASP and ISV from having to acquire or develop all of the supporting functionality needed to effectively deliver a service. Additionally, the AIP platform greatly shortens time to market, and minimizes start-up and operational costs.

The Proprietor may offer its customers, and thus the end users, a variety services including: developer services, hosting services, brokerage services, and marketing services. Developer services include development tools, AIP connection tools, laboratory space, professional support, professional services, re-use software repository, and application certification. Hosting services include collocated, managed, dedicated, or custom hosting. It is noted that AIP Services include the AIP service platform, which encompasses sales rather than service for the Enterprise with Internet Hosting customer. Brokerage services include ASP library listing for locating applications, demonstration environment, marketing services to ASPs, marketing services to customer prospects, service assurance options, and brokerage for marking application bundles.

FIG. **3** is a block diagram of a start-up ASP configuration. As seen, the ASP **200** is connected by an Access System **201** (i.e., access network) to the Internet **203**. The Access System **201** performs numerous functions, including firewalling, load balancing, web proxying, caching, network address translation (NAT), security proxying, and virtual private networking. Load balancing distributes the web page requests from the public Internet across the web servers, in part, to enhance response time for the end user. A firewall **205** resides in front of a Corporate Portal **207**, Application Servers **209**, Content Server **211**, Subscription system **213**, Billing system **215**, and Self Help system **217**.

The Corporate Portal **207** aggregates corporate content, sites, applications, messaging, and directory services for presentation and selection. Corporate content is the content of a normal corporate Intranet home page, which provides linkages to other corporate sites (e.g., Human Resources, Finance, Travel, etc.), rented applications, corporate applications, unified messaging, and directory services. This home page also provides a place for either linking or incorporating a personal portal. A personal portal is a page for integrating personal linkages and services, like favorite bookmarks and sites. The rating scheme is that corporate portal is a high utility, and the usage of logon, initial application selection, or corporate portal access to corporate content is moderate.

The Subscription system **213**, Billing system **215**, and Self Help system **217** have access to a LDAP/RDBM storage **219**. The Access network **201** also connects to one or more web servers **221**, a mail server **223**, and optionally an edge server **225**. In an exemplary embodiment, the network devices within the ASP **200** communicate in a Virtual LAN (VLAN) environment. The web servers **221** store the web pages constituting access to the corporate portals provided by the ASPs.

Corporate Customer sites **227** can receive services from the ASP **200** over the Internet **203**. A Voice Browser (VB) system **229** responds to concise set of spoken keywords to obtain information from an audio response unit (not shown); the VB system **229** connects to the Internet **203** and to a Public Switched Telephone Network (PSTN) **231** via a switch (SW) **230**. The Corporate Customer sites **227** may employ telephones **232** that are served by a PBX **233**, which connects to the PSTN **231**.

A Gateway **235** is coupled to the Internet **203** and enables communication originating from a Wireless Network **237**, which serves wireless devices **239** (e.g., PDAs, PCs, cellular phones, and etc.). A Corporate Customer site **227** may include a firewall **241**, a VPN function **243** (e.g., a VPN server), work stations **245**, and one or more application servers **247**.

FIG. **4** is a block diagram illustrating an AIP in a centralized architecture. Under this scenario, a central AIP **300** may utilize multiple ASP systems **301**, **303**, and **305**, which couple to an AIP message bus **307**, to provide application services to the ASPs (and their customers) as well as customers of the AIP **300**. It is noted that, in another embodiment of the present invention, the AIP **300** may be distributed such that these ASP systems **301**, **303**, and **305** are serviced by numerous AIPs. An AIP Profile and Policy Management System **309** and an Enrollment and Subscription System **311** may access a Lightweight Directory Access Protocol (LDAP) directory **313**. Enrollment, in an exemplary embodiment, pertains to corporate customers, whereby the corporate structure is used to

build the profile. The subscription process permits the users to subscribe to service packages that are established based on the profile of the corporation. In other words, customers enroll and build the User profile, Service profile, Device profile, and Security profile to establish service packages that will be offered to a corporate staff according to the applicable profiles.

The corporate staff may then subscribe to these established packages, as permitted by the associated profiles. Profile Management system **309** structures and builds profiles based on, for example, the Organizational Name hierarchy and User, Service, Device, and Security profiles; alternatively, the system **309** utilizes the LDAP directory **313**, a Meta Directory, and Join Engine to a Corporate Human Resources (HR) database (not shown).

The Billing system **315** and Customer Relationship Management (CRM) system **317** utilize a shared Relational Database Management (RDBM) storage **319**. Customer Relationship Management refers to methodologies, software, and Internet capabilities that help an enterprise manage customer relationships in an organized way. The AIP **300** further provides a Network Management system **321**. These systems **315**, **317**, **321** may communicate via the bus **307**. The bus **307** also provides connectivity to a Work Flow Manager and Rules Engine (WFM/RE) system **323**.

Similar to the ASP **200** of FIG. **3**, the ASP **305** provides a Corporate Portal system **325**, one or more Application Servers **327**, and a Content Server **329**, which are behind a firewall **331**. On the other side of the firewall **331**, one or more Web Servers **333**, a Mail Server **335**, and a Directory Service system **337** are situated. The AIP **300** is linked to the Internet **339** via a Ubiquitous Access system **341**. As mentioned previously, the Ubiquitous Access System **341** performs multiple functions including firewall, load balancer, web proxy/cache, NAT, Security Proxy and virtual private networking. A web cache holds in physical memory on a least frequently used basis the web pages most recently displayed to end users to avoid slow retrieval from disk. A security proxy implements the AIP security policies, and maintains copies of the security profiles, so that it can rapidly assess UserID/password combinations and grant access to authorized users.

The Corporate Customer sites **343** may access the AIP **300** via the Internet **339**. As with the system of FIG. **3**, A Voice Browser system **345** connects to the Internet **339** as well as the PSTN **349** through a switch (SW) **353**. Similarly, a gateway **349** ties a wireless network **355** with to the Internet **339**. Under this arrangement, a wireless device **357** may exchange information over the Internet **339**.

The Corporate customer site **343** essentially resembles that of the customer site **227** (FIG. **3**). That is, a firewall **359** and a VPN process **361** exist to support communication from the workstations **363** and the Application server **365**. Unlike the site **227**, in this example, an IP phone **369** is provided; the IP phone **369** connects to an Access system **367** to communicate over the Internet **339**.

FIG. **5** depicts an exemplary AIP configuration, as deployed in an Internet Data Center (IDC). An IDC **400** includes an AIP **401**, **404** that serves one or more ASP systems **403**; for example, one configuration is shown in FIG. **4**. For the purposes of explanation, the AIP **401**, **404** is shown as two blocks, in which block **401** refers to the common services, and the block **404** denotes the other services of the AIP. As shown, a number of IDCs **400** and associated AIP **401**, **404** may exist to provide a distributed system, which enhances service availability to the users and reduces user response times.

The ASP system **403** includes Web Servers (WS), Application Servers (AS), Communication Servers (CS), Transaction Servers (TS), and a Storage Area Network (SAN). These ASP systems **403** deliver service to customers **405** via any number of networks: the Internet **407**, a PSTN **409**, and a wireless network **411**. In this example, the Internet **407** may provide Policy Servers (PS) and Redirect Servers (RS), indicated at **416**. The Internet **407** is also linked to the PSTN **409** via a media gateway **420**, and the PSTN is linked to the Wireless Network **411** via a wireless gateway **422**. As in the systems of FIGS. **3** and **4**, a Voice Browser **410** is utilized.

The AIPs **401**, **404** connect to a network **425** of the Proprietor in support of a development and test environment encompassing a Network Operations Center (NOC) **413**, a Proprietor legacy system (or resources) **415**, and an Integrated Application Support Architecture (IASA) **417**. The IASA **417** provides support for services provisioning, CPE/circuit installation, activation, event management, and billing to AIPs for their consumption of services. In an exemplary embodiment, the network **425** may become part of the AIP **401** and used to support distributed AIP implementations. The Proprietor Legacy Resources **415** may include applications that have been developed as well as those applications that are in development; these applications may be utilized by the AIP **401** and integrated into its the common services for use by the ASPs in serving their customers.

The development applications of the Proprietor may conversely use common services of the AIP **401**. The AIP **404** shows an AIP Common Services Environment connected to a series of Web call centers **418** which are connected to the Internet **407**. The services of the Web call centers are also integrated into the AIP common services and available for use by the ASPs in serving their customers. The customers **405** have one or more edge servers **402** serving terminals such as telephones of varying types **406** and **408**, and PCs or workstations **421**. The wireless network **411** serves varying types of terminals, such as the PDA **412** and the wireless connected laptop computer or terminal **414**.

When integrated with the development and test environments of the Proprietor, the AIP provides significant benefits with respect to development, design, and production of new products and services. As an example, the availability of the AIP, as an integral Proprietor entity, frees Proprietor resources for use to application specific developments. Such developments and associated resources may include end user devices, platforms, data storage, and development and execution environments, which are usable to field the AIP. The configuration facilitates the ability to constantly develop new capabilities to be incrementally incorporated into the AIP, thereby increasing the efficiency of ongoing research and development. In this manner, a project can use some of the AIP common services, rather than implement redundant capabilities. A new project can also make its services available via the AIP, thus enabling other ongoing projects to use those services. This greatly leverages the capabilities provided in ongoing new projects and minimizes redundancy. As the AIP of the Proprietor scales, the AIP becomes distributed.

FIG. **6**A is a conceptual block diagram illustrating a Distributed AIP deployment configuration along with Proprietor systems, which may be associated and used with the AIP. Although shown as a centralized system, a development system (or environment) **501** may be distributed and located at several sites. Similarly, a Staging and Test Bed environment **503** may be distributed, thereby providing such advantages as improved network performance and system availability. The development system **501** includes a Service Creation Environment (SCE) **505** and Service Creation Manager (SCM) **507**, along with a development Repository **509** for respectively creating new services, managing the creation of such

services, and providing a repository for the new services that are created. The Staging and Test Bed system **503** includes System Integration or System Integrator (SI) **511**, Network Integration **513**, and Deployment **515**, all of which may be located at different sites. The Staging and Test Bed environment **503** may be used to integrate new applications onto systems, stage them for scaled system network test, and finally prepare them for automatic software deployment to AIP sites.

As seen in FIG. **6**A, each AIP **517** may be functionally divided into a common services environment, and an ASP, ISV, XSP environment. The common services environment includes those elements which are depicted above a service or message bus **519**, while the ASP, ISV, XSP environment is below the service bus **519**. The common services environment, and ASP, ISV, XSP environments share Content Management **521**. Content Management refers to management of data feeds, such as news, weather, sports, stock quotes and other data that end-users would find desirable.

The common services environment includes a SIP system **541**, an ASP and Customer billing system **543**, a Service Management system **545**, a Product Catalog **547**, an Enrollment and Subscription Management system **549**, and an XPM and Policy Management system **551**. The ASPs which are included in the XSP environment include co-located ASPs **523** and hosted ASPs **524**, as well as ISVs **527**. An external one or more ASP/ISVs **525** is connected to the message bus **519**, and may serve to make development, staging and test bed produced applications, and software available to the AIP for inclusion in its available services.

The ASPs **523** and **524** and the ISVs **527** are connected through a Ubiquitous Access system **529** to the ASP customers **531**. The external ASP/ISV **525** provides services to the AIP **517** via bus **519** and its connections to the Development environment **501** and the Staging/Test Bed environment **503**.

As the number of ASPs and the customer user load grow, additional AIPs are deployed outward into existing ASP sites. Thus, one of the distributed AIPs supports multiple ASPs/ISVs at an Internet Data Center (IDC), as illustrated in the functional area diagram of FIG. **5**. According to one embodiment of the present invention, services may be moved out to the edge of the network and closer to customers for improved performance. As the network expands, the initially deployed centralized sites may act as administration centers.

The service bus **519** provides communication among the various distributed instances of the AIP, as well as to link the distributed AIP to the Integrated Application Support Architecture (IASA) **533**, which handles AIP/ASP provisioning **535**, billing of AIPs **537**, and Inventory Management **539**. Under this arrangement, the customers of the Proprietor can own AIPs. The IASA **533** provides a inventory management **539** of assets, network and security operations, and support to AIPs. Also associated with the distributed AIP are the SOC **553**, NOC **555**, and Call Center **557**.

As seen in FIG. **6**A, the AIP **517** may support multiple ASP/ISVs per site. The AIP **517** also provides localized ASP customer care needed for web based enrollment of new customers, setting up of service packages, subscription support, localized event collection, billing, reporting, and localized customer support. Local Workflow Management and Rules Engines coordinate development of needed products to accomplish these tasks. All of these activities are integrated onto a common message bus (EAI/MOM). External ASP/ISV services may be integrated along with local ASP/ISV services into a common product catalog that may be used by new ASPs to select their services for customization and resale to customers.

As previously noted, the AIP **317** includes a robust set of services and applications intended to provide a full featured environment for the targeted customers, namely, ASPs. The AIP **317** retains the same architectural structure, while omitting from the structure those services and applications that are not needed to fulfill the immediate AIP Infrastructure objective. The AIP **317** advantageously provides a common service framework in which commercial applications can be implemented and launched to demonstrate the ability to reduce development cost, time to market, and maintenance costs while achieving technical goals for performance, scalability, and reliability.

FIG. **6**B shows the architecture of the AIP, whereby the AIP houses services by Independent Service Vendors (ISVs), according to another embodiment of the present invention. In this example, the architecture is largely similar to the system of FIG. **6**A, with the exception that the AIPs **517** are without the ASPs **523**, **524**. Further, by contrast to the system of FIG. **6**A, internal ASP/ISVs **559** are not within the AIPs **517**, but instead are connected through the service bus **519**. Accordingly, the AIPs **517** have the flexibility to provide application services from any number of sources.

FIG. **7** shows an AIP **601** that includes the Ubiquitous Access object **603**. As shown, the ubiquitous access object **603** includes a Transcoder **605** which receives varied protocols from ASP Portals indicated at **607**. These portals include a Web Portal, Wireless Portal, and Voice Portal. From these portals the Transcoder **605** receives the various mark up language protocols, such as the HTML, HDML, WML, VXML, and XML protocols.

The transcoder **605** translates these protocols into protocols that are readable by the various end user devices. The output of the Transcoder **605** is presented to the various networks via a series of browsers **609**, **611**, **613**, and **615**, which respectively deliver HTTP, WAP, SIP/RTP, and SS7/TDM signals. The three uppermost browsers **609**, **611**, and **613** handle signals for PCs and the like. In addition, these browsers **609**, **611**, **613**, and **615** handle the varied protocols which terminate in the variety of larger or smaller displays offered in WAP devices ranging from PDAs to WAP phones. These outputs are delivered to the Internet **617**, Gateway **619**, and Wireless Network **621**. The Wireless Network **621** links to various Wireless devices **623**. The Voice Browser **615** delivers output via Switch **625** to the PSTN **627**. The Internet **617** feeds a large number of Customers **629** through Firewalls **631** and VPNs **633**. The VPN links to Work Stations **635** and VOIP phones **637** via access **639**. The VPN **633** is also connected to an Application Server **641**. The Voice Browser **615** and PSTN **627** are linked to POTS phones **645** via PBX **643**.

Through a Service Bus **647**, the AIP **601** provides common services **648**, which are similar to those previously discussed in connection with the system of FIG. **4**. The Bus **647** connects a WFM/RE **649**, Profile and Policy Management **651**, Enrollment and Subscription **653**, Billing **655**, CRM **657**, and System and Network Management **659**. LDAP and RDBM storages **661** and **663** are also provided.

Referring to FIG. **8**, the AIP is shown at **700**, an ASP at **701**, and the AIP common services environment at **703**. Proprietor environments that are associated with the AIP are indicated at **705**; these include the development and test bed environments are similar to those shown at **501** and **503** in FIG. **6**A. In the associated Proprietor environments **705** in FIG. **8** are included the Proprietor Legacy technology **709**, the IASA **711**, the NOC **713**, the Development and Test Bed **717**, and the Web Based Interaction Center (WBIC) **715**. While logical details of one ASP are shown at **701** in FIG. **8**, it is shown at

707 that virtually any number of ASPs may be readily accommodated, indicative of the high scalability supported by the AIP.

In the common services environment **703** are shown the WFM/RM systems **721**, the Profile and Policy Management systems **723**, Directory Services **725**, Intrusion Detection System (IDS) **727**, SLA Management **729**, the Financial Exact Server **731**, Services Management **733**, the AIP service catalog **735**, ASP/Customer billing **736**, Event Management **737**, Reporting **739**, Content Management **741**, System and Network Management **743**, VPN **745**, and External Services Adapter **747**.

Event Management **737** includes login/logoff, start/stop, time based, resource based, exception based and other similar kinds of event processing. Event management **737** drives the following systems: billing **736**, security **727**, and SLA management **729**. The adapter **747** is a translator that is used in the AIP architecture to couple two communicating software components that do not naturally use the same protocols; the adapter **747**, for example, may transform one representation of a business function into another. These components are all connected by the SAN **748** to the associated databases that serve them. These databases are indicated collectively at **749** with a backup **751**.

Service Bus **753** is connected via a firewall **755** to the Storage Area Network **757**. This network **757** has attached thereto the Corporate Data Storages here represented by storages **759** and **761**. Also tied to the Storage Area Network **757** (for example, from its own VLAN) are the Content Server **763**, Application Servers **767**, UM Mail Servers **769**, Transaction Server **771**, and Intrusion Detection System (IDS) **773**. These servers **765**, **767**, **769**, **771**, and **773** communicate with the Trusted Net **775**, which is connected through firewall **777** to the DMZ Net **779**.

The Portal Servers **765**, Application Servers **767**, and UM Mail Servers **769** are connected to the Edge Server **781**. The Edge Server **781** includes the Security Proxy **783**, Web Proxy/Cache **785**, Streaming Server **789**, UA/VB **791**, a Mail Transfer Agent (MTA) **793**, VPN **795**, and WAP Gateway **797**. The MTA **793** transfers email from a mail server to a mail client. These elements **783**, **785**, **789**, **791**, **793**, **795**, and **797** are connected to the Demilitarized Zone (DMZ) Net **779**. Also connected to the DMZ Net **779** are the Load Balancers **799** and a plurality of Web Servers **1100**.

If an ASP customer of the AIP has web servers available, as indicated in this diagram, the customer may choose to use those web servers. Alternatively, the AIP may house these web servers and offer web hosting services. That is, web servers used by ASPs may either be their own web servers, which are physically located at the ASP site, or may be web servers of the AIP at an AIP site. The same flexibility extends to the Edge Servers, as well as all of the other components that an ASP customer of the AIP may require. Accordingly, a customer ASP may elect to simply receive services of the AIP without the cost of acquiring and maintaining hardware or software. Although FIG. **8** shows a component in a block representing an ASP, the component need not necessarily be located at an ASP site, or at a centralized AIP site.

The AIP **700** provides reusable infrastructure components to ASP Sites. These components may include Web Servers, Application Servers, Content Servers, Transaction Servers, and Corporate Data Storage. The AIP **700** also provides infrastructure components to Customer Sites. These components may include Edge Servers, and Network Elements such as Voice Browser and SIP PS/RS. As previously stated, it is a feature of the present invention that the AIP **700** as well as the Proprietor environment may be distributed.

The DMZ Net **779** is connected via a firewall **798** to the Internet **796**, PSTN **794**, and Wireless Network **792**. Each of the Internet **796**, PSTN **794**, and Wireless Network **792** are connected to Corporate SIP Access Systems **790**. The PSTN **794** feeds various telephone terminals **788**, while the Internet **796** feeds PC and Work Station Terminals indicated at **786**. The Wireless Network **792** feeds various wireless terminals **784**.

The deployment shown in FIG. **8** supports, in an exemplary embodiment, three zones of security: DMZ (demilitarized zone) Net **779**, Trusted Zone Net **775**, and AIP Common Service Zone (also referred to as "High Security Zone") **703**. That is, the architecture supports are firewalls, which prevent the unauthorized access of AIP platforms from the public Internet **796**. The DMZ (demilitarized zone) Net **779** is the entry point from the Internet **796**, following the firewall **798**. The DMZ Net **779** provides the initial level of protection to multiple corporate access points; that is, each corporation can have its own dedicated access components (e.g., edge server and web servers). This zone is also the lowest level of availability, usually relying upon cluster management instead of high availability solutions.

The Trusted Zone Net **775** is the behind the DMZ **779** and provides a second level of security to the applications that are accessed through the DMZ's access servers. A different type of firewall than that of the firewall **798** is employed to deter hacking through to the applications and their data. Corporate data is also stored in this zone, which runs at a higher level of availability, relying upon N+1 sparing of application servers, capacity on demand to support instantaneous loads, fail-over thread control for redundant container management in software, and backup of customer data.

The AIP Common Service Zone **703** is protected by a third firewall **755**. Within the AIP **700** are common services that are supplied to ASPs and common data that is important to the operation of the AIP/ASPs. This zone **703** provides the highest level of availability relying upon capacity on demand resource pooling for adding ASPs, and high availability configurations with in site warm backup databases and disaster recovery across sites.

With respect to Infrastructure, the following systems are supported: EAI/MOM, Work Flow Manager, Adapters, API/Interfaces, LDAP, Hierarchy, Firewalls, DMZ, NAT, Web Cache and Proxy, Load Balancer, Web Server, VPN, Policy Manager, SLA Management, Authentication, Authorization and Accounting (AAA), Profile Manager, Allocated Administration, Enrollment, Subscription, Customization, Event Manager, Provisioning, flat rate or usage Billing, Operation Support, System Management, Network Management, Corporate Portal Adapter, Personalization, SIP Servers, CPE Access, e-Mail, Voice Mail, Paging, Fax, Personal Address Book, NAS/SAN, Calendar, Corporate Directory, Telco Directory, Application Manager, Thin Client, Fat Client, NAS, eCommerce Configurator, Development Environment, Execution Environment, and SIP Integration.

The Products include Corporate (B2E) web Portal "white box" (i.e., a generic or non-branded construct) customizable application and content management. Also SIP communications integration is provided for Customer Premise Equipment at customer sites and network SIP Servers needed to route and gateway calls to and from a PSTN. Unified Messaging products include SIP based voice mail, email, page, fax, and personal and corporate address books out of a common web accessible mailbox and network message store. Directory Services of national Telephony and Corporate Directories are supported. The products also include Ubiquitous access and voice portal front end to UM, Personal Portal

with local content services and personal linkages, and initial B2B Portal with aggregate AIP/ASP/ISV product catalog for reselling services.

Further Applications on Demand (AOD) are provided and include Business Applications, such as HR and finance, and Personal Applications, such as MICROSOFT OFFICE. Applications on Demand (AoD) are applications that are subscribed to and paid for on an as-use basis by the corporate user. Typically these applications include personal productivity (e.g., MS Office), professional applications (e.g., analysis, design, development, simulation, test), and some general-purpose business applications (e.g., Procurement Order, Tracking/Status, T&E, etc.). An Application on Demand server is the host from which the application is served. In a thin client application, the end user has a display component on their workstation while the bulk of the application runs on the server. In a thick client instance, the application is copied from this server to the client workstation and run on the workstation.

Other products encompass Host Management Services to support rapid service creation, deployment, and support of ASP/ISV applications; advanced B2B Portal with Small to Medium Enterprises (SME) supply chain applications; more AOD (Customer Resource Mgmt, Enterprise Resource Planning, Dev Env); advanced security (Intrusion Detection System, Public Key Infrastructure, Anti Virus, Security Operations Center); Network Operations Center (SIP integrated), and ASP Customer Provisioning, Support, and Billing at distributed AIP. Enterprise Resource Planning (ERP) refers to a broad set of activities supported by multi-module application software that helps a manufacturer or other business manage the important parts of its business, including product planning, parts purchasing, maintaining inventories, interacting with suppliers, providing customer service, and tracking orders. ERP can also include application modules for the finance and human resources aspects of a business.

Additionally, technology enablers, such as Plug and Play, Best in Class, Re-use, and Adaptive technologies are supported. The adaptive technologies include the following: self-configuring networks using client and service registration with dynamic brokering; roaming-using geographic user re-registration and profile fragment following; presence-using user registered, on-line, and available indicators; and location-using devices, Global Positioning System (GPS), limited range Radio Frequency (RF), or Infrared wireless connection to IP (Internet Protocol) appliances or wireless LANs, such as BLUETOOTH and IEEE (Institute of Electrical and Electronics Engineers) 802.11b.

Further, the AIP **700** provides reusable infrastructure components to Customer Sites (Edge Server), Network Elements (Voice Browser, SIP PS/RS), and ASPs (Web Servers, Application Servers, Content Servers, Transaction Servers, Corporate Data Storage). As noted earlier, under this approach, the ASP functionality, which is highly cohesive, may be tightly coupled to common services, which are themselves highly cohesive.

FIGS. **9**A and **9**B show diagrammatic illustrations of security, cohesion, and coupling enabled by the AIP. FIG. **9**A shows a deployment scalability with numerous ASPs **803** servicing multiple Corporate Customers **801** at several sites supported with one centralized AIP **805**. For purposes of explanation, the APSs **803** serve corporate customers that number in the hundreds.

Alternatively, the AIP deployment may be distributed, as shown in FIG. **9**B. In this example, the AIP may scale to serve a large metropolitan configuration, with multiple AIPs **915** servicing many ASPs **917**. In turn, the ASPs **917** offer services to many different types of clients of varying sizes: small customers **921**, medium customers **923**, and large customers **925**. The AIPs **915** share a distributed environment of IASA **901**, NOC **903**, SOC **905**, and WBIC **907** in support of **100** ASPs **917**. In an exemplary embodiment, the ASPs **917** may thus support over a thousand Corporate Customers **919** per ASP, with 100,000 users per ASP.

As seen from FIG. **9**B, the user community per AIP can grow significantly for large metropolitan areas. The AIP deployments can provide both horizontal and vertical hardware scalability, in addition to software scalability. Horizontal scalability refers to adding components, such as servers, to add system capacity. This approach of scalability may be used on a web site front end. In addition, horizontal scalable processors, which are fixed and low cost, may be managed as clusters with front end load balancers. If a horizontally scalable processor fails, the load balancer detects the failure condition and sends the next service request to the next available processor until the failed processor is replaced. Vertical scalability refers to utilizing bigger/faster servers, and translates to a multi-way symmetric multi-processing (SMP) configuration. Each customer has a dedicated pool of SMP processors, volatile memory (RAM), Input/Output, and Storage. A common pool of resources is provided for growth, either instantaneous or long term. Both types of resource growth can be supported by capacity on demand.

With respect to software scalability, modern development technology supports dynamic management of applications through, for example, Java Server Pages (JSP) and Enterprise Java Beans (EJB). These technologies use container-managed persistence to create, run, and destroy application beans, dynamically freeing up resources for other applications. Thus, applications run upon demand, and do not over consume resources, as for example a servlet does. Servlets typically only support one service per processor, whereas EJBs can support multiple dynamic application beans. According to one embodiment of the invention, software components use EJB container managed persistence service beans. This lower level of granularity allows function level beans to be built, executed and used by multiple applications.

Java provides several attractive features in the web server environment. Perhaps the most valuable is its interpreted nature: with a Java enabled browser web pages containing Java applets can be animated and reasonably be expected to behave the same on virtually every platform, operating system and browser combination. The key to this is the development of the Java Virtual Machine (JVM). JVMs are available for nearly every O/S and browser combination. While Java also supports servlets, which are executed on the web server system as opposed to applets which execute on the web browser system, the breakthrough technology is the evolution of the Enterprise Java Bean (EJB). With EJBs, web pages (actually implemented in downloaded HTML) can display results that are obtained through the invocation of EJBs which reside and execute on service platforms in the web server environment. By running the EJB on a separate server, both the web browser and web server systems are not burdened with supporting the computational activity delivered by the EJB and are able to serve and display web pages without any significant performance degradation. Further, as the EJB does not need to run on any web browser that displays the web page referencing the EJB, the EJB can be compiled into native instructions for the server on which it runs and need not be interpreted in a JVM. And this yields an EJB that demands fewer resources than would its interpretive counterpart. Finally, as Java is standards based, there are a growing body

of tools and facilities based on the Java standards that will extend the capabilities of services implemented following the Java standards.

The availability of VPNs enables an AIP to receive, store and deliver data in exchanges with ASPs, and through corporate portals across the public Internet in privacy and with the assurance that the data retains its integrity. VPNs also provide the ability to restrict the access to the VPN to specific severs and services. These features enable the AIP to be able to offer its services through a wide array of ASPs and be assured that the data exchanges will be only from and to the intended party.

FIG. **10** shows a top (or high level) model of the processing path from Corporate Customer to Legacy systems. The prefix (cc) indicates class category and is used to distinguish a class category from a class (overloading). Each class category is classified into its components in the following description. The dashed line between packages or blocks indicates a dependency (class category A uses class category B). The top level is a processing chain from multiple Corporation Customers **1001** per ASP through a network **1003** to multiple ASPs **1005** per AIP **1007**. The Corporate Customer **1001** can have edge servers **1004** to support multimedia or to add an intranet corporate page (i.e., a corporate portal); such a scenario is reflective of larger corporations that have intranets. If the corporation is too small to maintain an intranet, then the edge server may be within the ASP site. The ASP **1005** is a commercial venture that sells (or rent) applications to many corporations **1001**. The AIP **1007** provides an extensive set of common services to the ASPs **1005** that they cannot afford to provide themselves. The components **1001-1907** are more fully described below with respect to FIGS. **11**, **12**, **14**, and **15**.

IASA **1011** is connected to the AIP by a carrier network **1013** and is connected to the Proprietor Legacy Technology **1015**. IASA supports such services as SIP and WBGS or UDS. WBIC **1017** provides web support center capabilities to ASPs **1005** and customers **1001**. NOC **1019** supports the network and DE/TB **1021** supports development, testing, and integration of new services.

FIG. **11** shows a corporate customer model, which is a logical object oriented depiction of typical corporate customer infrastructure relationships. A Corporate Customer may be a Small to Medium Enterprise (SME) or Large Enterprise that seeks to outsource services to avoid product lifecycle costs and to reduce its own information technology organization costs. Accordingly, referring to the actor hierarchy at the left side of the figure, the Customer **1100** is a generic entity. The Customer could be a Tester **1101**, User **1103**, Administrator **1105**, Worker **1107**, or Developer **1109**. Further, the User **1103** could be a Tester **1101**, User **1103**, Administrator **1105**, Worker **1107**, or Developer **1109**. The User **1103** may access the customer infrastructure via a PC **1111**, SIP Phone **1113**, Wireless device **1115**, POTS phone **1117**. The phone **1117** is linked to a PBX **1119** connected to a PSTN link **1121** via a demarcation interface **1123**. The customer is linked to the serving ASP/AIP via the AIP Edge Server **1125**, VPN client **1127**, and Intranet **1129**.

Corporate Security **1131** is enabled by a Secure Server **1133**, Intrusion Detection System (IDS) **1135**, and Border Router/Firewall (BR/FW) **1137**. The Human Resources Database (HR DB) **1139** is utilized in user sign-on. As stated, the User **1103** accesses the infrastructure services via various types of terminals, here shown as PCs **1111**, SIP phones **1113**, Wireless devices **1115** linked to the wireless LAN **1141**, and POTS phones **1117** linked to the PBX **1119** and Demarcation interface **1123**. A Corporate Application Server **1143** is available via the Intranet **1129**. As previously described in connection with FIGS. **6** and **7**, FIG. **11** is a logical diagram wherein the presence of a component signifies its use, but does not necessarily indicate its physical presence. Thus, the Edge Server **1125**, HR Database **1139**, Corporate Application Server **1143**, and Security components **1131**, **1133**, **1135**, and **1137**, while shown here in Customer Infrastructure, are found in the combined AIP/ASP environments, such as shown in FIG. **8**, according to one embodiment of the present invention.

In this scenario, Corporate Customers are renting the following services: Corporate Portal, Unified Messaging, Applications on Demand, Directory Services, ubiquitous access to applications, network application storage/backup/recovery, and security. These portals, applications, and services are branded in their own corporation brand and appear to users to be local. This is accomplished using an Edge Server that acts as a local server and redirects the portal, application, and service requests to the ASP (or ASPs) providing them. The ASP provides bills to the Corporation broken down by department and services used.

As seen in the Corporate Customer model shown in FIG. **11**, in the lower left portion thereof, that a significant usage of the system of the present invention involves voice traffic. Thus, FIG. **11** shows the Corporate Customer infrastructure utilizing POTS phones **1117**, SIP phones **1113**, and Wireless devices **1115**.

Reference is now made to FIG. **12**, which is a logical object oriented diagram showing a network model for handling voice calls originating with the Corporate Customer. The network comprises the Internet, the PSTN, and Wireless. SIP servers (at least location servers) are also considered to be network elements. These include user device registration (Registrar) as part of the Redirect Server, which indicates to the Proxy Server where a user currently is located.

FIG. **12** shows a Corporate Customer site **1201** containing a BR/FW **1203**. The BR/FW **1203** links the Customer **1201** to the network components shown at **1205**. An edge server **1207** has a BR/FW **1209**, which links it to the Internet **1211**, and a voice browser (VB) **1213**. The browser **1213** provides voice menus with Speech to Text (STT) and Text to Speech (TTS) conversion.

The site **1201** can support POTS calls as well as VoIP calls. POTS phone voice calls are processed first by a customer Demarcation interface **1215**, and then at the POP **1217** to the PSTN **1219**. A Voice Browser **1213** connects to a switch (SW) **1221**, which attaches to PSTN **1219**. PSTN Points of Presence (POPS), in an exemplary embodiment, are digital access points for the Internet. VoIP calls are handled using the Registrar **1223**, the Redirect Server **1225**, SIP **1227**, the Internet **1211**, and the Media Gateway **1231**. VoIP calls also may travel the Media Gateway **1231**, Switch **1221**, PSTN **1219**, and POP **1217**. The Redirect Server **1225** locates users in the appropriate storages, while the Proxy Server **1229** establishes their authorization. The Registrar **1223**, SIP **1227**, Redirect Server **1225**, and Proxy Server **1229** determine the routing of a SIP call. The Proxy Server **1229** is tied to the Domain Name Service (DNS) and translates URLs to corresponding IP Addresses.

FIG. **13** provides a depiction of Proprietor Voice Portal Architecture for enabling voice browsing in AIP operation. Under one operational scenario, a POTS phone **1301** originates an 8xx (or toll free) call to gain access to the network. The call may seek data or information, such as Stock and News content **1302**, or other Content **1303**, which is provided by a customer (e.g., vendors **1305** and **1307**) of a Proprietor AIP.

The Vendor **1305** returns voice responses, while the Vendor **1307** returns e-commerce responses, such as to a PDA or the like terminal. While the Vendors **1305** and **1307** operate the service for making the information available, the involved hardware, software, and service may be provided by the AIP. The call originating at the telephone **1301** passes via the LEC **1309** to the AIP network **1311**. From the Proprietor network **1311** the call is directed to a Switch **1313** or **1315**, and then to Voice Portal Recognition Clients **1317**.

The voice recognition clients work with Voice Recognition Servers **1319** and Voice Portal Browsers **1321**. The voice signal is converted into text, which may represent voice requests or commands. The command, which originates from an identified source or user, is next sent via the AIP Internal Data Network **1323** to Voice Portal LDAP servers **1325** and to Voice Portal Application Servers **1331**. The LDAP servers **1325** access the Customer Data storage **1327** and Administration and Access Database **1329**. Also, the LDAP servers **1325**, in conjunction with the Application Servers **1331**, determine whether the requesting party is entitled to the service or information requested. After ascertaining that the requester is entitled to have the request filled, the information is transmitted back through the Voice Recognition Servers, Clients, and Browsers **1319**, **1317**, and **1321**. The requested information is then converted into speech and is delivered over the phone **1301**. Information regarding the transaction is reported by the Vendor **1305**, **1307** via the Internet **1333** through Firewall **1335** to the AIP Billing Systems **1337**.

The Billing Systems **1337** prepare Internal Reports **1339** and communicate with a Terminal **1341** for setting up Accounts. The PC or Workstation **1345** may be used to obtain Web Access for Profile Personalization. It is recognized that an authorized user may access information over the phone or a PC (or Work Station) **1345** over the Internet **1333**. The PC **1345** provides a means for establishing such access through the Internet **1333**, Firewall **1349**, and AIP Internal Data Network **1323**.

FIG. **14** is a diagram of an edge server service environment, according to an embodiment of the present invention. An AIP Edge Server environment **1401** provides common access mechanisms for multiple ASPs. For small sites, the environment **1401** may be shared among such sites; however, for large ASPs, a dedicated environment **1401** may be employed. The AIP Edge Server environment **1401** moves performance sensitive services closer to the end customer, in which the higher the correlation of load to performance, the more likely edge servers can improve performance.

The Edge Server environment **1401** communicates with a Web Proxy **1403** from an ASP and has connectivity to the Internet **1405**. The Edge Server environment **1401** establishes the forward boundary of the DMZ (Demilitarized Zone), in form of a DMZ network (Net) **1407**.

As shown, the Edge Server environment **1401** also includes a Proprietor Edge Server **1409**, and the Edge Server Security **1411**. The Edge Server Security **1411** interacts with an Intrusion Detection System **1415**, a Border Router/Firewall **1417**, and a Secure Server **1413**. The Edge Server **1409** provides the services of ubiquitous access **1419**, Global Load Balancing **1421**, WAP Gateway **1423**, MTA **1425**, and Streaming Server **1427**. The DMZ Net **1407** also supports SIP/RTP messages from a Voice Browser (VB) **1429**, which communicates with a Switch **1431**.

FIG. **15** is a logical diagram showing an exemplary ASP providing AIP services to a customer site. An ASP **1501** has a VPN Server **1529**, Edge Server **1531**, and the DMZ network **1506** (whether incorporated within the ASP or supported through an Edge Server), serving as a front end to the customer site **1505**. The DMZ network **1506** provides a firewall protected LAN segment to which various ISP components are connected, including a Web Cache **1507**, a Load Balancer **1509**, a NAT **1510**, a Web Server **1511**, a Security Agent **1513**, and an ASP Firewall **1515**. The Web Server **1511** includes a security agent **1513** that sends initial unauthorized access to the Security Server for authentication. Initial access authorization might require accessing the policy manager (part of the AIP). The Applications are protected by an ASP firewall **1515** between the DMZ **1506** and Trusted Net **1508** LAN segments, thus imposing at least two firewalls before reaching the applications and application content/data.

The ASP backend includes an IDS **1524**, a Portal Server **1527**, and an Application Server Environment **1517** (e.g., ASP/JSP and Servlet/EJB containers and service beans). Dynamic pages are generated from function selections at the web server and are passed on to the ASP/JSP for page generation. Content may come from Portal links to Content Servers **1519** or Application links to data. Transaction Servers **1521** support applications that require transaction operations on data. Data **1525** is stored on securely Storage Area Network **1523** partitions by the corporation.

FIG. **16** shows an AIP Services Model, according to an embodiment of the present invention. While the customer ASPs may select from among numerous services in the AIP product catalog, the core services support the optional services and are included in the basic services offered to the ASPs. As shown, an AIP **1601** utilizes a Service Bus **1603** to provide these core services, which are delivered to the ASP **1604** Trusted Net **1602**. The AIP is supported by DE/TB **1606**, WBIC **1608**, NOC **1610**, and IASA **16012**, via Intranet **1614** and a carrier network **1616**.

The core service elements include MOM **1605**, WFM **1607**, RE **1609**, EAI **1611**, Profile Manager **1613**, Join Engine **1623** and Meta Directory **1625**, AIP Directory **1615**, Policy Manager **1617**, AIP Service Catalog **1619**, ASP Billing **1621**, AIP Reporting **1627**, Content Management **1629**, and SLA Management **1631**. Profile Manager **1613**, Join Engine **1623** and Meta Directory **1625**, AIP Directory **1615**, Policy Manager (xPM) **1617**, AIP Service Catalog **1619**, ASP Billing **1621**, AIP Reporting **1627**, Content Management **1629**, and SLA Management **1631** are controlled by Service Management **1633**.

The AIP Service Catalog **1619** aggregates applications and services from multiple sources into bundles that may be subscribed to by their ASPs and delivered to the ASP's customers. The aggregate product catalog enables service providers to leverage more customers by wholesaling or leasing to other service providers than they can address on their own. The Profile Manager **1613** provides generic user, service, device, and security profiles populated to customer hierarchies, service packages, device characteristics, and security characteristics. These profiles may be stored in an LDAP directory and may be populated by using a Meta Directory and Join Engine to pull in corporate data. The Policy Manager **1617** provides rules for managing access control, quality of service delivery based on SLA, service/device dependencies, and presence management. Policy Management is often combined with profile management that is provided by the Profile Manger **1613**. Service Management **1633** controls many aspects of service creation, usage and reporting.

The Billing system **1621** generates invoices for aggregation of applications and services to a customer, an ASP, or an AIP, depending upon how the invoices are to be delivered. By way of example, the IASA bills an AIP for services delivered. The AIP may process the bill for itself, its ASPs, and its ASP's customers based on accounts. SLA Management: SLA Man-

agement **1631** provides for comparison of application or network events that affect delivery of applications and services to customers based on SLA criteria and the adjustment of billing based on out-of-availability conditions with or without human intervention. This is a specialized instance of the more generalized Policy Manager **1617**.

The AIP Reporting system **1627** provides AIP aggregated event, financial, support statistics, and detailed reports via the web or electronic delivery to customers, ASPs, AIPs, support centers (NOC, SOC, WBIC), and IASA. Standard and customized reports may be made available and result in additional revenue to the AIP. Report sources are Event Management, SLA Management, Billing, Application/System/Network Management, and CRM/ERP.

Content Management **1629** provides for authoring, collecting, packaging, configuration managing, deployment, recovery, and serving of different types of content used by corporations and service providers to their customers. Content Management **1629** is may be implemented as standalone COTS integrated with profile and policy management.

In addition, other core services include Event Manager **1635**, which is linked to SLA Management **1631**, Quality of Service Manager **1637** and Network Management **1639**, which is linked to Quality of Service Management **1637**, and System Management **1641**. Event Management **1635** provides the capability to instrument applications, collect events, classify events, filter/sort/aggregate events, and deliver alarms, statistics, and details to the appropriate consumer of events. Event driven systems, of which AIP is a prime example, use MOM **1605** to deliver events. Also, along with WFM **1607** and RE **1609**, Event Management **1635** creates products and routes them to the correct consumers as the result of events. In general, events can be triggered by applications, systems, and network elements, like error conditions, alarms, heartbeats, performance counter statistics, and billable events.

The Environment Management **1643** provides Application/System/Network Management tools, which use events to determine their health and availability. In addition, events may be used to determine the health and availability of applications. These events may be captured in log files or MIBs or by other instrumentation (e.g., SNMP or JMX agents). Events are usually stored for particular amounts of time and then archived and overwritten, as in circular log files. In addition, these events may be filtered and correlated at the network and system level to determine significance.

The Event Manager **1635**, the Quality of Service Manager **1637**, Network Management **1639**, and System Management **1641** are controlled by Environment Management **1643**. Further, other core services of the AIP are as follows: Adapter Services **1645**, Directory Service **1647**, AIP Firewall **1649**, IDS **1651**, Application Server **1653**, CRM **1655**(which controls the Application Server **1653**), and VPN Server **1657**. This entire array of common core services may be made available to all ASP, ISV, and XSP customers of the AIP, in addition to the optional services elected by individual customers.

The AIP **1601** includes many common services that are used by the ASPs within the same site. The core of the AIP **1601** is the EAI **1611** that includes a MOM **1605**, WFM **1607** and RE **1609** that control (business) process execution. Service Management **1633** supplies many common services that are involved in service delivery. For instance, when the Profile Manager **1613** creates and imports a new corporation hierarchy, the data that is needed by any other service is propagated to those services via pub/sub channels on the MOM **1605**. Policy Manager **1617** interprets the service delivery means (UA) and the associated security that is needed to satisfy a security request.

The AIP **1601** has a service catalog **1619** that aggregates internal and external services (and rate/revenue sharing plans) that can be resold by any ASP within its domain. Billing **1621** supports collection of billable events, aggregating, rating, taxing and invoice line item preparation for the ASP to bill their customers. Reporting **1627** supports revenue, usage, statistics and problem summarization and detail reports for ASPs, their customer and external service providers (e.g., ISVs). Content Management **1629** builds the content that the ASP content servers use. SLA Management **1631** uses application/system/network events to determine service availability and delivery compliance. SLA Management **1631** feeds automatic bill corrections upon exception.

Environment Management **1643** provides a set of services that are needed to manage the AIP/ASP environments. Event Management **1635** collects and classifies event data, and makes the data available to an ASP billing system **1621** and an ASP reporting system **1627**. QoS Management **1637** manages bandwidth, content and priorities in accordance with SLA agreements (as a type of network management). Network Management **1639** monitors, controls network resources and provides events to the SLA Management **1631** and reporting. System Management **1627** monitors, controls system resources, and provides events to SLA Management and Reporting **1631**.

Micro Services are services that are delivered through ASPs to their customers, and include Directory Services (Global and Corporate), which may be expanded to include localized directory resources (e.g., closes venue). The AIP **1601** may also include applications that can be used by ASPs and their customers; such applications include CRM **1655** (uses Event Management and Revenue reporting data to show effectiveness of service revenue by ASP/Customer).

VPN **1657** is used to protect Adapter **1645** connections via network facilities **1646**, **1648** to other global support systems (e.g., IASA **1650**, NOC **1652**, WBIC **1654**, DE/TB **1656**).

AIP Enterprise Application Integration (EAI) **1611** supports automation and integration mechanisms for the following: Message Oriented Middleware (MOM) **1605**, Work Flow Management (WFM) **1607**, and Rules Engine (RE) **1609**. The MOM **1605** provides publish and subscribe, point-to-point, and guaranteed delivery messaging. The WFM **1607** automates business processes, both with manual decision intervention and with rules engine to automate decisions based on events/conditions/actions, including those supported by the AIP Common Services. The Rules Engine (RE) **1609** provides automation of business rules that direct business processes either to manned decisions or automated (event, condition, action) decisions.

FIG. **17** is a diagram of a service management system employed in an AIP environment, according to an embodiment of the present invention. In an exemplary embodiment, a Web Page listing the AIP services is provided by an ASP service delivery system **1723**. AIP common services are managed by a Service Management system **1701**, which in an exemplary embodiment, supports administration functions at a number of levels: AIP Administration, ASP Administration, and customer (e.g., Corporate) Administration. The Service Management system **1701** controls the entry of new services through a Service Creation component **1703**. The Service Management system **1701** also regulates users into the system, establishing appropriate profiles outlining their autho-

rized activities; these functions are provided by an Enrollment component **1705** and a Service Subscription component **1707**.

The Services Management system **1701** may access, via MOM **1713**, services and data that are provided by the Join Engine **1715**, the Meta Directory **1717**, Profile and Policy Management **1719**, and the AIP/ASP Customer Directory **1721**. The Join Engine **1715** is also connected to the Internet **1711**, so that the information which it obtains from the Meta Directory **1717**, Profile and Policy Management **1719**, and the AIP/ASP Customer Directory **1721** are also available via that medium and any VPNs and secure links that the AIP may establish via the Internet **1711**. This arrangement permits the Join Engine **1715** and Meta Directory **1717** to perform their conventional functions to access and correlate data.

A customer site may include a Human Resources (HR) database **1709** that is accessible over the Internet **1711**. Accordingly, data may be obtained from the HR database **1709** and the AIP/ASP Customer Directory **1721**. Enrolling customers are entered into the AIP/ASP Customer Directory **1721**, and customers or users who are signing on are checked against that data as well as the appropriate profiles and policy management information via the Join Engine **1715** and the Meta Directory **1717**. Users subscribe and customize a profile via the Service Subscription component **1707** and the Profile and Policy Management system **1719**. The services selected may combine services from other ASPs, including external ASPs and Development ASPs, such as the ASP **525** previously described in connection with FIG. **6**. The subscribed ASP services **1723** may be delivered via the bus **1713** and Internet **1711**.

FIG. **18** is a diagram showing the relationship of an Integrated Applications Support Architecture (IASA) with the Proprietor, according to an embodiment of the present invention. A pre-AIP model delivers Proprietor global services to Proprietor customers, while an AIP generation model delivers any service, Proprietor or external service provider (generically referred to as an ASP), to any service provider's customer. The AIP model may be referred to as an ASP delivery model. Both models exist within the Proprietor, but there may be an evolution from the first to the second over time.

The IASA **1819** supports provisioning, billing, and SLA Management of the Proprietor global services in legacy systems, e.g., for circuit or customer premise equipment (CPE). Proprietor global services are any service provided by internal products and services, which are sold and/or supported directly to or by Proprietor.

Referring to FIG. **18**, AIP **1801**, in an exemplary embodiment, represents the entire logical AIP, which may exist in distributed physical locations. ASP **1803**, ASP customers **1805**, and ISV **1807** are linked to the AIP **1801** via Extranet **1811** and Common Access **1809**. As discussed, the AIP **1801** provides service registration, aggregation and brokering capabilities to other products and services of the Proprietor **1813** and hosted ASPs **1803**, as well as common service management capabilities. Such services may be supplied to Proprietor Customers **1815** via Private or Extranet **1817**. The AIP **1801** supports resale of any cataloged or registered service to any other service provider for resale to any customer. AIP **1801** is linked to IASA **1819** via Intranet **1821**, which also links AIP **1801** to Proprietor **1813**. IASA **1819** in turn is linked to Proprietor Enterprise Legacy system **1826** via Intranet **1823**.

External customers may communicate with the AIP **1801** via the Internet **1821** over various carriers, for example, through VPN tunnels to ensure customer service delivery privacy. That is, the external service providers employ VPN tunnels, which connect them to the service aggregation capabilities of the AIP **1801**. The AIP **1801** supports communications to internal projects (e.g., SIP, IASA, Web Center) over the Proprietor's own secure high-speed backbone —i.e., the Intranet **1821**. IASA **1819** communicates to legacy systems **1826** via an internal network (or Intranet) **1823**.

When a new ASP **1813** is moved onto the AIP **1801**, their services are registered into a service directory or catalog for resale to other ASPs **1803** and their customers **1805**. This allows any ASP **1803**, **1813** to leverage any service that is available for resale by customizing branding, billing plans, SLAs (etc) and presentation via an AIP support infrastructure to the selling ASP's customer specific portals. If the ASP **1803** resells a registered or cataloged service, then the revenue is shared (based upon the reseller's agreement) among the original service provider (GDP, ASP or ISV) **1813**, the AIP **1801**, and the selling ASP **1803**.

The IASA also supports provisioning, billing and SLA Management of global services whereas the AIP supports these services for local ASPs. Global services run in the network as network elements and are not localized to AIP/ASP but can be subscribed to by customers through an AIP/ASP. A shared revenue scenario or model is presently described in detail. Therefore AIP **1801**, SIP **1827**, and WBIC **1825** interface with IASA **1819** to provision, bill and manage global services. SIP **1827** and WBIC **1825** interface with IASA via Intranet **1831**. IASA **1819** in turn interfaces with Legacy systems **1826** to provision circuits and CPE.

FIG. **19** is an event diagram of a Global Service Shared Revenue Scenario, showing the interaction among a customer **1901**, an ASP **1903**, an AIP **1905**, and a Proprietor **1909**. In step **1**, an ASP **1903** signs on a new Corporate Customer **1901**. To accomplish this, the AIP Administrator **1905** creates a new corporate hierarchy in the Profile Management system. This hierarchy is shared with the IASA (over a network **1907** of the Proprietor **1909**) to have commonality and to get a Legacy Corporation (Proprietor) ID for the Corporation (if it exists). In step **2**, when usage occurs, usage events are generated in the network (e.g., from routers which are instrumented) and reported back to IASA. The IASA aggregates these events, rates them based on pricing/billing plans with the corporate customers.

The invoice, as in step **3**, is sent to the AIP **1905**, where the invoice items for each service used by an ASP **1903** are aggregated into an ASP's bill. The AIP **1905** adds revenue sharing percentage (and/or flat rate) to the total per service charges being passed on to the ASP **1903** (I.ASP+RS(AIP)). The ASP **1903** adds their revenue sharing percentage and prepares a combined invoice for the customer listing many of the charges for services consumed (I.Cust+RS(AIP+ASP)); this is performed by the AIP **1905**. In step **4**, the customer receives the invoice and determines charges aggregations at divisions and department levels. Detailed reports may be made available at an ASP URL (as supported by the AIP **1905**). In step **5**, the Corporate Customer **1901** pays the Proprietor **1907** (e.g., funds transfer), who extracts revenue sharing totals and passes them down to the AIP **1905**. The AIP **1905** takes their revenue share and passes the ASP revenue share to the ASP **1903**. If Customer Corporation **1901** pays one bill for several corporate sites, the Proprietor can apportion revenue sharing across the correct AIP **1905** and ASP **1903** groups; this information being in the corporate hierarchy record storage.

FIG. **20** is a relational diagram of the hierarchy of an exemplary AIP, according to an embodiment of the present invention. As shown, a company (e.g., proprietor **2001**) may provide one or more AIPs **2003** (shown as 1. . . n) and a

Development Environment **2005** and Test Bed **2009**. The Proprietor **2001** is associated with one or more System Integrators (SIs) **2007**. The System Integrator **2007** may be associated with none or multiple AIPs **2003**. The customer (e.g., corporation) **2015** similarly may support multiple AIPs **2003**; alternatively, the customer **2015** need not support any of its own AIPs **2003**. As shown, one or more AIPs **2003** are associated with or has one IASA **2021**, which is a Service Supplier. Additionally, one AIP has one or more ISVs **2019**, which may include a Service Supplier **2017**.

One AIP **2003** is a Customer of SI **2007** and/or a Corporation **2015**. The AIP **2003** is associated with one or more ASPs **2013**, one of which is a Customer **2011** of one or more AIPs **2003**. Another ASP **2013** is a Service Supplier **2017** to (one or more) AIPs **2003**. One ASP **2013** has one or more Corporate Customers **2015**; one Corporation **2015** is a Customer **2011** of one or more ASPs **2013**.

FIG. **21** provides a diagrammatic representation of Development Environment (DE)/Testbed (TB)/Administrator in DE/TB relationships. A Proprietor or company **2101** has a Development Environment **2103** and is associated with or has one or more SIs **2105**. The SI **2105** has a Test Bed **2107**, where integration and tests are executed. A Service Supplier **2109** may be an ASP or an ISV. The company **2101** or SI **2105** has one or more Developers **2111** that are associated with the Development Environment **2103**. Service Supplier **2109** (e.g., ASP, ISV, the company, or SI) has one or more Testers **2115**. Testers **2115** are associated with the Test Bed **2107**, Service Supplier **2109** has one or more Administrators **2113**. Customer **2117** has one or more Developers **2111**, one or more Testers **2115**, and one or more Administrators **2113**.

FIG. **22** is a diagram of the operational relationships associated with Administration and Support, according to an embodiment of the present invention. A Proprietor or company **2201**, Service Supplier **2203**, SI **2205**, Customer **2207** has one or more Administrators **2209** and one or more Support Entities **2211**. Allocated Administration **2209** shares responsibilities for different activities. Thus, AIP **2211** has an Administrator **2209** for creating/enrolling a customer (e.g., corporation). An ASP **2213** has an Administrator **2209** to create service packages, and to assign to roles. The Corporate Customer **2217** may also have an Administrator; e.g., self subscription. As with the ASP **2213**, an ISV **2215** has a many-to-one relationship with the AIP **2212**.

A Support agent **2211** shares responsibilities for different activities of the system integrator **2205**, the AIP **2212**, the ASP **2213**, and the corporate customer **2217**. For example, with respect to the customer **2217**, the support **2211** may receive problems, filters and passes ASP specific problems through to the ASP **2213**. Similarly, in service of the ASP **2213**, the Support **2211** assists customers of the ASP **2213** with its services, and filters and passes on AIP-related problems. The Support agent **2211** may communicate with an IASA **2219**, a NOC **2221**, and/or a WBIC **2223** in carrying out its support functions.

FIG. **23** is a diagram of a process for setting up of an AIP, according to an embodiment of the present invention. The following diagrammatic examples illustrate the actions of the Proprietor Administrator or Administration, AIP Administrator, ASP Administrator, Corporate Administrator, and the Corporate end-users. The AIP five layer business model is evidenced in the way the activities of provisioning AIPs, ASPs, Corporations and end-users are apportioned among the various Administrator staff. FIG. **23** shows the responsibilities of the Administrator, according to one embodiment of the present invention. This figure is a relational flow diagram which provides a simplified diagrammatic illustration of a typical procedure or series of steps in the establishment of a Proprietor operated AIP according to one embodiment of the present invention.

The diagram illustrates the five layer model of Proprietor, AIP, ASP, Corporate Customers, and Users. An Administration agent **2301** controls the actions portrayed by this flow diagram. At **2303**, the Proprietor creates an AIP. At **2305** the AIP adds an ASP. The AIP enrolls a Corporate Customer, who will utilize the services of the ASP (at **2307**). At **2309**, the ASP adds a Service Package selected from the AIP common services. This service package includes the services that the ASP will need in serving the corporate customer.

At **2311**, the Corporation manages user subscriptions for the services of the ASP for which the corporation is enrolled and to which the user wishes to subscribe. The user may be any of the users discussed in connection with FIG. **11**. One example of a user would be an employee of the corporation, while another would be a customer of the corporation, as described in the process of FIG. **24**.

FIG. **24** is a diagram of a self-subscription process and use of AIP services by an end user, according to an embodiment of the present invention. A User **2401**, who is authorized (or classified as a permissible user), may self subscribe at **2403**. The user **2401** subscribes for those services of the ASP which the corporation offers for subscription to those which it classifies as permissible users. At **2405**, the subscribed User **2401** can proceed to use the services. At **2417**, as a subscriber, the User may utilize the services associated with the subscription. Revenues that are derived from this use of the service are shared by the AIP **2409** and the ASP **2411**, at **2407**.

FIGS. **25-31** are event diagrams illustrating exemplary AIP operational activities. FIG. **25** is an event diagram showing the creation of an AIP. In this scenario, the agents or elements involved in the process are the Proprietor Administrator **2501**, Policy Manager **2502**, Profile Manager **2503**, AIP Service **2505**, ASP **2507**, NOC **2509**, IASA **2511**, and WBIC **2513**. In step **1**, the company or Proprietor Administrator **2501** logs in and is validated by the Policy Manager **2502**. The Proprietor Administrator **2501**, as in step **2**, invokes the "create AIP" function. Profile Manager **2503** returns the "create AIP" template, whereby exemplary default services and associated parameters are specified. Next, in step **3**, the Proprietor Administrator **2501** fills in the template with the new AIP ID and the AIP NODE. Profile Manager **2503** stores the new AIP profile, per step **4**. In step **5**, the Proprietor Administrator **2501** sets up the company personnel, who will be able to manage the new AIP node. In step **6**, the Profile Manger **2503** stores the personnel information in the AIP profile. The Proprietor Administrator **2501**, as in step **7**, then adds the company internal services to the AIP that the AIP (and its ASPs) can access. Profile Manager **2503** creates an AIP product catalog and stores the services in the product catalog (step **8**).

In step **9**, the Proprietor Administrator **2501** then enters external interface definitions and information associated with external AIP nodes (i.e., components not maintained by the proprietor). Next, Profile Manager **2503**, as in step **10**, stores the external interface definitions in the AIP's external node profiles, which enumerate service parameters and preferences corresponding to the particular AIP component. In step **11**, the Proprietor Administrator **2501** adds external ASP/ISV services to the AIP. The Proprietor Administrator **2501** selects an external ASP, subscribes to its services, and the ASP **2505** creates the subscription. The Profile Manager **2503**, per step **12**, enters the subscription to the external services and adds the subscriptions to the AIP product catalog. In step **13**, the Proprietor Administrator **2501** then runs a sequence of verification tests to prove that the AIP is fully functional. In step

14, Profile Manager **2503** verifies the hierarchy under the AIP Node profile and displays the verification results. In step **15**, Profile Manager **2503** publishes the AIP node Hierarchy to the Network Operations Center (NOC) **2509**, IASA **2511**, and WBIC **2513**. The Proprietor Administrator **2501**, as in step **16**, may optionally create a company ASP. Because of the five layer AIP business model, having a Proprietor ASP through which the Proprietor can directly offer its services, is desirable. Next, Profile Manager **2503** copies the AIP hierarchy into the Proprietor ASP node, per step **17**.

FIG. **26** is an event diagram showing the addition of an ASP to an AIP. The involved agents are AIP Administrator **2601**, Policy Manager **2603**, Profile Manager **2605**, ASP Service **2607**, AIP Service **2609**, ASP Administrator **2611**, NOC **2613**, IASA **2615**, and WBIC **2617**. In step **1**, the AIP Administrator **2601** logs in, which is validated by the Policy Manager **2603** (step **2**). In step **3**, the AIP Administrator **2601** invokes the "new ASP" profile. In turn, the Profile Manager **2605** displays a "new ASP" template, per step **4**. The AIP Administrator **2601**, as in step **5**, enters the new ASP ID into the template. In step **6**, the Profile Manager **2605** stores the ASP ID in a new ASP profile, which is displayed at the node. The AIP Administrator **2601** then enters the AIP personnel who will be managing the new ASP, per step **7**. This includes personnel, roles, names, access, and related information. In step **8**, the Profile Manager **2605** stores the personnel information in the ASP profile. In step **9**, the AIP Administrator **2601** enters and sets the ASP internal services; these are the services that the ASP offers. In step **10**, the Profile Manager **2605** creates a product catalog for the ASP and enters the services into the ASP product catalog. The Profile Manager **2605** the ASP internal service profiles and displays the ASPs product catalog and services. The AIP Administrator **2601**, as in step **11**, enters the information on external interfaces and sets the interfaces. In step **12**, the Profile Manager **2605** enters the external interfaces into the ASP's external node profiles. Next, in step **13**, the AIP Administrator **2601** selects the AIP services the ASP will use and/or resell.

In step **14**, the Profile Manger **2605** subscribes to the AIP services. The AIP Administrator **2601**, as in step **15**, specifies the details of the Service Level Agreements (SLA) agreed by the AIP and the ASP. In step **16**, the Profile Manager **2605** adds the SLA to the Subscription Profiles. In step **17**, the AIP Administrator **2601** adds the ASP Administrator personnel to the ASP. The Profile Manager **2605** updates the ASP profile with the ASP Administrator personnel, per step **18**. In step **19**, the AIP Administrator **2601** notifies the ASP Administrator **2611** that the ASP is ready to test; the notification may occur though an AIP service. In step **20**, the AIP Administrator **2601** and ASP Administrator **2611** jointly run a sequence of verification tests. Upon completion of the tests, the AIP Administrator publishes the ASP node hierarchy to NOC **2613**, IASA **2615**, and WBIC **2617**, per step **21**. In step **22**, the Profile Manager distributes the ASP node hierarchy to NOC, IASA, and WBIC.

FIG. **27** is an event diagram showing the enrollment of a Corporate Customer. Under this scenario, the involved agents are AIP Administrator **2701**, Policy Manager **2703**, Profile Manager **2705**, Join Engine **2707**, new Corporate Customer Human Resources (HR) database **2709**, ASP Service **2711**, and Corporate Administrator **2713**. Each time an ASP "signs up" (or enrolls) a new customer, that customer can be provisioned into the supporting ASP's profile. Once the ASP's customer has a profile the ASP can manage the Customer. In step **1**, the AIP Administrator **2701** logs in. The Policy Manager **2703** validates the login, per step **2**. In step **3**, the AIP Administrator **2701** creates a new Corporation Node under the ASP node. At this point, the Profile Manager **2705** adds the Corporation Node under the ASP profile, per step **4**. In step **5**, the AIP Administrator **2701** populates the ASP with the Corporation's employee data. In step **6**, the Profile Manager **2705** retrieves meta-data from the Corporations Human Relations database, and creates a join structure with the Corporate Profile and then extracts the employee data from the Corporate HR database and populates the join structure. User profiles are created for each employee and stored.

In step **7**, the AIP Administrator **2701** then modifies profiles of the Corporate Employees to include the role of Corporate Administration. The Profile Manager **2705**, as in step **8**, stores the modified employee profiles. In step **9**, the AIP and Corporate Administrator verify the Employee profiles and the corporate hierarchy.

FIG. **28** is an event diagram showing an ASP adding service packs to a corporate portal. In this example, an ASP Administrator **2801** logs on, per step **1**; the login is validated by a Policy Manager **2803** (step **2**). In step **3**, the ASP Administrator **2801** creates role definitions for the corporation. Next, in step **4**, the Profile Manager **2803** creates the rolls and assigns specific users to the roles. This is iterated through the user hierarchy. In step **5**, the ASP Administrator **2801** defines the service packages. Next, Profile Manager **2805**, as in step **6**, creates a service package, which is an aggregation of services for a user role, assigns the SLA terms and conditions to the service, and links the service package to roles in the user profile. Each user can access a set of services based on roles. In step **7**, the ASP Administrator **2801** runs a sequence of verification tests and, together with the Corporate Administrator **2809**, validates a selection of user roles.

FIG. **29** is an event diagram showing a customer capable of managing user subscription —e.g., a Corporate Customer Managing Employee Subscription. In this process, the involved agents are ASP Administrator **2901**, Policy Manager **2903**, Profile Manager **2905**, ASP Service **2907**, and Event Manager **2909**. In steps **1** and **2**, the ASP Administrator **2901** logs on, which is validated by the Policy Manager **2903**. In step **3**, the ASP Administrator **2901** enables services for a corporation. The Profile Manager **2905**, as in step **4**, enables the services, starts the service charge, and generates an event. In step **5**, the Event Manager **2909** receives the event and enables billing for services to the corporation. In step **6**, the ASP Administrator **2901** enables a range of employees to be able to subscribe to services. This is representative of a phased enrollment in which groups of employees are allowed to subscribe on a time-phased schedule.

In step **7**, the ASP Administrator **2901** enables some services by site. Next, the ASP Administrator **2901**, as in step **8**, performs some routine administrative duties such as adding new end-users and deleting those who have left the corporation.

FIG. **30** is an event diagram showing a process in which a customer enables users to self-subscribe. In this example, the customer is a Corporate Customer and provides its employees with the capability to perform self-subscription. The login process, as in steps **1** and **2**, involves an End User **3001** logging in, and a Policy Manager **3003** validating the login. In step **3**, the End User **3001** submits requests to subscribe to services to a Profile Manager **3005**, which in turn obtains the subscriber information by way of a form and stores the updated User profile. In step **4**, the End User **3001** selects the services, access, notification, and devices; this information is added to an End User Profile by the Profile Manager **3005**, triggering a subscription event (per step **5**). In step **6**, the Event Manager **3009** receives the event and enables billing based on the services selected.

FIG. **31** is an event diagram showing an End User Accessing a Service. As with the previous processes, a Subscriber/End User **3101** logs in, per step **1**. In step **2**, a Policy Manager **3103** validates user using the Profile Manager **3105** to get the user's profile. In step **3**, the user and devices used are then registered with the Presence Manager **3107**. This records that the user is present and is available on at least one device. The device characteristics which the user is using are also recorded. The Policy Manager **3103**, as in step **4**, displays the services that the user can access via Corporate Portal **3109**. In step **5**, the End User selects a service. The ASP Service **3111** creates a service usage event and sends the event to the Event Manager **3113** for the purpose of generating usage, billing and SLA compliance data. ASP Service **3111** returns the service.

In step **6**, the End User **3101** terminates the service and ASP Service **3111** sends a usage event to Event Manager **3113**. End User **3101** selects the service, and ASP Service **3111** sends a usage event to the Event Manager **3113**. Next, the End User logs off, per step **7**. The Policy Manager **3103** de-registers the user and the user's device from the Presence Manager **3109**. The Policy Manager **3103** also sends a logoff event to the Event Manager **3113**.

Accordingly it is seen that one embodiment of the present invention provides an AIP, and provides an AIP associated with a Proprietor environment, and that these supply and meet the need for a vehicle to enable more efficient use of available capabilities and expertise and, at the same time, effectively provide a wide variety of selectable capabilities and services of a dynamic and scalable nature. The economic and technical burdens of independent ASPs are reduced, while at the same time enabling the ASPs to offer services and technologies which would heretofore have been beyond their capabilities. In addition, future growth, improvement, and enhancement are built-in with continuing benefits to the Proprietor, ASPs, XSPs, and their respective clienteles.

While the present invention has been described in connection with a number of embodiments and implementations, the present invention is not so limited but covers various obvious modifications and equivalent arrangements, which fall within the purview of the appended claims.

What is claimed is:

1. A system for automatically providing application services, the system comprising:

a plurality of application service provider systems providing application services to customer entities for use in end user devices; and

a common services environment including hardware and software configured to allow said end user devices to access and utilize said application services of said plurality of application service provider systems, and said common services environment further including management systems to provide integrated application, back-office, and management services to said application service provider systems for use in managing and supporting access by said end user devices to said application services of said plurality of application service provider systems;

wherein said common services environment is supported with common environment storage of application service provider and common environment data including product catalogs for presentation and management of application service provider products;

wherein said product catalogs include applications provided to said application service providers from said common services environment and additional applications from said common services environment for offering to new application service providers.

2. A system for automatically providing application services, the system comprising:

a plurality of application service provider systems providing application services to customer entities for use in end user devices; and

a common services environment including hardware and software configured to allow said end user devices to access and utilize said application services of said plurality of application service provider systems, and said common services environment further including management systems to provide integrated application, back-office, and management services to said application service provider systems for use in managing and supporting access by said end user devices to said application services of said plurality of application service provider systems;

an access system linking said application service providers and customer entities via multiple networks, said access system including a security management system

wherein said access system includes transcoder and portal systems delivering content based on the requirements of different types of network and end user devices.

3. A system for automatically providing application services, the system comprising:

a plurality of application service provider systems providing application services to customer entities for use in end user devices; and

a common services environment including hardware and software configured to allow said end user devices to access and utilize said application services of said plurality of application service provider systems, and said common services environment further including management systems to provide integrated application, back-office, and management services to said application service provider systems for use in managing and supporting access by said end user devices to said application services of said plurality of application service provider systems;

an access system linking said application service providers and customer entities via multiple networks, said access system including a security management system;

wherein said access system includes transcoder and portal systems delivering content based on the requirements of different types of network and end user devices;

wherein said transcoder provides the presentation to said devices based on a device profile and an Extensible Markup Language (XML) input data stream.

4. A system for automatically providing application services, the system comprising:

a plurality of application service provider systems providing application services to customer entities for use in end user devices; and

a common services environment including hardware and software configured to allow said end user devices to access and utilize said application services of said plurality of application service provider systems, and said common services environment further including management systems to provide integrated application, back-office, and management services to said application service provider systems for use in managing and supporting access by said end user devices to said application services of said plurality of application service provider systems;

an access system linking said application service providers and customer entities via multiple networks, said access system including a security management system;

wherein said access system includes transcoder and portal systems delivering content based on the requirements of different types of network and end user devices;

wherein said transcoder converts content between markup languages and adapts content to match end user device configurations.

5. A method of automatically providing application infrastructure services, comprising:

providing an application infrastructure platform including an application service provider environment including multiple application service provider hardware and software systems for providing application services to customer entities for use in end user devices;

providing a common services environment including hardware and software for interacting with said application service provider hardware and software systems to allow said end user devices to access and utilize said application services of said plurality of application service provider systems,

wherein independent operators operating said application service provider systems in said application service provider environment; and

operating said common services environment to interact with and support said operation of said application service provider systems in said application service provider environment by said independent operators and supplying applications and integrated operating and management services used by said application service providers in delivering said application services to said customer entities for use in said devices,

wherein said common services environment is supported with common services environment storage of application service provider data and common services environment data;

wherein said common environment data includes product catalogs for presentation and management of application service provider products;

wherein said product catalogs include applications provided to said application service providers from said common services environment and additional applications from said common services environment for offering to new application service providers.

* * * * *