US011376971B2

(12) **United States Patent**
Wang et al.

(10) **Patent No.: US 11,376,971 B2**
(45) **Date of Patent: *Jul. 5, 2022**

(54) **AUTOMOBILE CHARGER**

(71) Applicant: **PILOT INC.**, City of Industry, CA (US)

(72) Inventors: **Calvin Shiening Wang**, City of Industry, CA (US); **Chung-Hsin Wang**, Shenzhen (CN)

(73) Assignee: **PILOT INC.**, City of Industry, CA (US)

(*) Notice: Subject to any disclaimer, the term of this patent is extended or adjusted under 35 U.S.C. 154(b) by 0 days.

This patent is subject to a terminal disclaimer.

(21) Appl. No.: **17/495,196**

(22) Filed: **Oct. 6, 2021**

(65) **Prior Publication Data**

US 2022/0024327 A1 Jan. 27, 2022

Related U.S. Application Data

(63) Continuation of application No. 17/131,113, filed on Dec. 22, 2020, which is a continuation of application

(Continued)

(30) **Foreign Application Priority Data**

Apr. 28, 2014 (CN) 201420212173.5

(51) **Int. Cl.**
B60L 53/00 (2019.01)
H02J 7/00 (2006.01)

(Continued)

(52) **U.S. Cl.**
CPC ***B60L 53/00*** (2019.02); ***B60L 53/53*** (2019.02); ***H02J 7/0034*** (2013.01);

(Continued)

(58) **Field of Classification Search**
CPC B60L 53/00; B60L 53/53; H02J 7/0034; H02J 7/0068

(Continued)

(56) **References Cited**

U.S. PATENT DOCUMENTS

3,267,452 A 8/1966 Wolf
3,343,057 A 9/1967 Smith

(Continued)

FOREIGN PATENT DOCUMENTS

AU 694452 B2 7/1998
AU 6997198 A 7/1998

(Continued)

OTHER PUBLICATIONS

"AAA Oregon Deploys PowerSafe Jump Start Systems" www.powersafejumpercables.com; Mar. 17, 2011.

(Continued)

Primary Examiner — Sun J Lin
(74) *Attorney, Agent, or Firm* — Jason H. Vick; Sheridan Ross, PC

(57) **ABSTRACT**

A novel automobile charger which comprises a direct current voltage, wherein a positive pole of the direct current voltage is connected with one end or lead of a DC to DC module, one end of a battery voltage detection module and one end of a load module simultaneously, while a negative pole of a battery is connected with the other end of the DC to DC module, one end of a microcontroller, one end of an automobile start control module and the other end of the battery voltage detection module simultaneously. A third end of the DC to DC module is connected with the other end of the microcontroller, the other three ends of which are connected with a third end of the battery voltage detection module, the other end of the automobile start control module and one end of a load detection module respectively. The

(Continued)

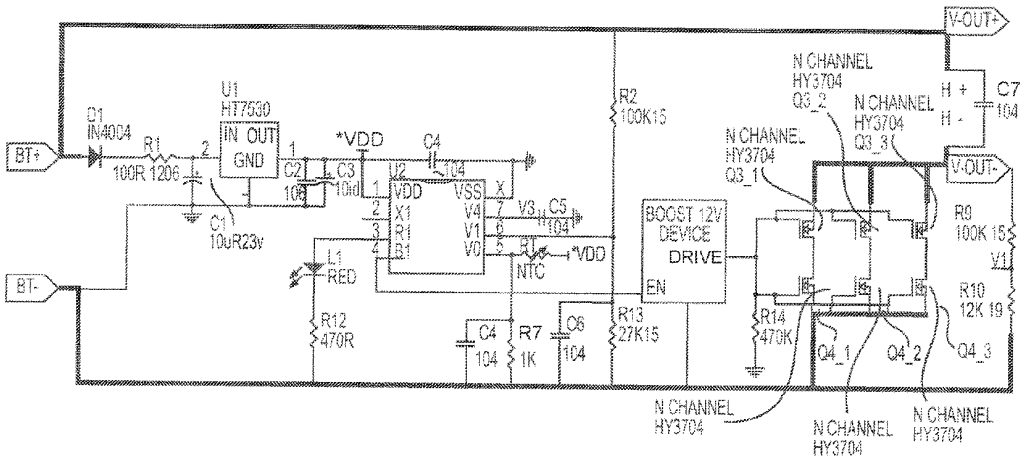

Chic Electrics, Exhibit 1001
Shenzhen Chic Electrics v. Pilot

other end of the load detection module is connected with a third end of the automobile start control module and the other end of the load module simultaneously.

30 Claims, 2 Drawing Sheets

Related U.S. Application Data

No. 16/404,321, filed on May 6, 2019, now Pat. No. 10,875,410, which is a continuation of application No. 15/923,219, filed on Mar. 16, 2018, now Pat. No. 10,328,806, which is a continuation of application No. 15/355,409, filed on Nov. 18, 2016, now Pat. No. 10,046,653, which is a continuation of application No. 14/569,352, filed on Dec. 12, 2014, now Pat. No. 9,525,297.

(51) **Int. Cl.**
B60L 53/53 (2019.01)
H02J 9/00 (2006.01)

(52) **U.S. Cl.**
CPC ***H02J 7/0068*** (2013.01); *H02J 7/0029* (2013.01); *H02J 9/005* (2013.01); *H02J 2207/20* (2020.01)

(58) **Field of Classification Search**
USPC 320/109
See application file for complete search history.

(56) **References Cited**

U.S. PATENT DOCUMENTS

3,590,357	A	6/1971	Reid
3,950,668	A	4/1976	Mattis et al.
3,950,688	A	4/1976	Sancey et al.
4,871,957	A	10/1989	Taranto et al.
5,319,298	A	6/1994	Wanzong et al.
5,487,002	A	1/1996	Diller et al.
5,793,185	A	8/1998	Prelec et al.
5,831,350	A	11/1998	McConkey et al.
6,057,667	A	5/2000	Mills
6,130,519	A	10/2000	Whiting et al.
6,144,110	A	11/2000	Matsuda et al.
6,160,381	A	12/2000	Peterzell
6,212,054	B1	4/2001	Chan
6,249,106	B1	6/2001	Turner et al.
6,262,492	B1	7/2001	Sheng
6,271,605	B1	8/2001	Carkner et al.
6,344,733	B1	2/2002	Crass et al.
6,351,102	B1	2/2002	Troy
6,362,599	B1	3/2002	Turner et al.
6,424,158	B2	7/2002	Klang
6,426,606	B1	7/2002	Purkey
6,459,175	B1	10/2002	Potega
6,632,103	B1	10/2003	Liu
6,774,607	B2	8/2004	Moseneder et al.
6,803,743	B2	10/2004	George et al.
6,919,704	B1	7/2005	Healey
7,002,265	B2	2/2006	Potega
7,199,555	B2	4/2007	Hung
7,339,347	B2	3/2008	Elder et al.
7,345,450	B2	3/2008	Krieger et al.
7,508,171	B2	3/2009	Carrier et al.
7,579,811	B2	8/2009	Sato et al.
7,656,118	B2	2/2010	Krieger et al.
7,675,261	B2	3/2010	Elder et al.
7,839,117	B2	11/2010	Elder et al.
8,072,900	B2	12/2011	Antal et al.
8,125,181	B2	2/2012	Gregg et al.
8,172,603	B1	5/2012	Richardet, Jr.
8,183,821	B2	5/2012	Sakurai
8,253,376	B2	8/2012	Gale et al.
8,447,543	B2	5/2013	Dickinson et al.
8,565,930	B2	10/2013	Miwa
8,692,513	B2	4/2014	Gaul et al.
8,723,477	B2	5/2014	Gaul et al.
8,994,327	B2	3/2015	Kusch et al.
9,007,015	B1	4/2015	Nook et al.
9,007,023	B2	4/2015	Dao
9,248,746	B2	2/2016	Wen
9,263,717	B2	2/2016	Nakano et al.
9,263,907	B2	2/2016	Richardson et al.
9,287,725	B2	3/2016	Huffman et al.
9,333,865	B2	5/2016	Kawasaki
9,352,652	B2	5/2016	Montemayor Cavazos et al.
9,412,994	B2	8/2016	Koebler
9,496,728	B2	11/2016	Lei
9,506,446	B2	11/2016	Xinfang
9,525,297	B2	12/2016	Wang et al.
9,871,392	B2	1/2018	Durando et al.
9,874,611	B2	1/2018	Whiting et al.
9,954,391	B2	4/2018	Lei
10,046,653	B2	8/2018	Wang et al.
10,328,806	B2	6/2019	Wang et al.
10,875,410	B2	12/2020	Wang et al.
11,043,768	B1 *	6/2021	King et al. H01R 13/70
11,104,236	B2	8/2021	Wang et al.
11,124,077	B2	9/2021	Wang et al.
2001/0038276	A1	11/2001	Resch et al.
2002/0075003	A1	6/2002	Fridman et al.
2003/0096158	A1	5/2003	Takano et al.
2004/0066168	A1	4/2004	George et al.
2004/0130298	A1	7/2004	Krieger et al.
2005/0110467	A1	5/2005	Thomason
2005/0162124	A1	7/2005	Bertness et al.
2005/0212521	A1	9/2005	Bertness
2005/0258797	A1	11/2005	Hung
2006/0244412	A1	11/2006	Bonzer et al.
2009/0008374	A1	1/2009	Fosbinder
2009/0174362	A1	7/2009	Richardson et al.
2010/0013302	A1	1/2010	Howell et al.
2010/0055546	A1	3/2010	Elder et al.
2010/0173182	A1	7/2010	Baxter et al.
2010/0181959	A1	7/2010	Gibbs et al.
2010/0244766	A1	9/2010	Olsberg
2010/0301800	A1	12/2010	Inskeep
2011/0127947	A1	6/2011	Hunter et al.
2011/0216451	A1	9/2011	Haines et al.
2011/0279089	A1	11/2011	Yeo
2012/0013189	A1	1/2012	Jenkins
2012/0025763	A1	2/2012	Hsiao et al.
2012/0068662	A1	3/2012	Durando et al.
2012/0139498	A1	6/2012	Chang
2013/0015814	A1	1/2013	Kelty et al.
2013/0154543	A1	6/2013	Richardson et al.
2013/0241488	A1	9/2013	Dao
2013/0241498	A1	9/2013	Koebler
2014/0159509	A1	6/2014	Inskeep
2015/0012174	A1	1/2015	Kim et al.
2015/0032312	A1	1/2015	Lambrinos et al.
2015/0212135	A1	7/2015	Jin et al.
2015/0340907	A1	11/2015	Lei
2016/0079776	A1	3/2016	Iguchi et al.
2021/0107365	A1	4/2021	Wang et al.
2021/0237590	A1	8/2021	Wang et al.
2021/0237591	A1	8/2021	Wang et al.

FOREIGN PATENT DOCUMENTS

CN	201947042	U	8/2011
CN	202696190	U	1/2013
CN	103066662	A	4/2013
CN	203211234	U	9/2013
CN	203522157	U	4/2014
DE	202013102599	U1	8/2013
EP	1673828	B1	5/2013
JP	2015-115979	A	6/2015
WO	WO 00/24108		4/2000

Chic Electrics, Exhibit 1001
Shenzhen Chic Electrics v. Pilot

(56) **References Cited**

FOREIGN PATENT DOCUMENTS

WO	WO 2010/129723	11/2010
WO	WO 2012/080996	6/2012

OTHER PUBLICATIONS

Asia Bright Industrial (H.K.) Co. Ltd. "JPR 9000M Series—Mini Jump Start—Product Datasheet" Apr. 22, 2013.
Asia Bright Industrial (H.K.) Co. Ltd. "JPR M Series—Mini Jump Start—Product Datasheet" Date Unknown.
Battery Extender® Model BE01258 Lithium Ion Jump Starter, Fuel Pack and Backup Power Owner's Manual, Schumacher Electric Corporation, date unknown, 19 pages.
Black & Decker "Start-It Jump 'n Charge Smart Battery Charger / Jump-Starter" Vector Manufacturing 2006.
Black & Decker "Start-It Jump Starter 12 Volt DC Power Supply Cordless & Rechargeable—User's Manual & Warranty Information" Vector Manufacturing; 2005.
Bradford, "Re: Pilot Notice of Infringement (Amazon Case ID: 7131799991)," Jul. 9, 2020, 9 pages.
Crenshaw"Coming to SEMA: Fool-Proof Jumper Cables," Rides, Oct. 28, 2010, 4 pages.
Coolest Gadgets "Juno Power Announces the JUMPR External Battery" Apr. 25, 2014.
Cunningham, Wayne "Three Pocket-Size Jump Starters" Road / Show by Cnet; Apr. 28, 2014.
DieHard "Owner's Manual—Portable Power 950 Jump Starter and DC Power Source: Model No. 200.71487" Sears, Roebuck and Co.; Dec. 2005.
DieHard "Portable Power 950 Product Packaging," available before Apr. 28, 2014, 1 page.
Edelstein, Stephen "Lithium-Ion Batteries for Lighter, Compact Jump-Starting Pack" Apr. 26, 2014.
"E-Power-21," Shenzhen Carku Technology Co., Ltd., Date Unknown, 1 page.
Fairchild Semiconductor "LM78XX/LM78XXa: 3-Terminal 1A Positive Voltage Regulator" Fairchild Semiconductor Corporation; Mar. 2008.
Francisco, Kevin Bruce "This Power Bank Charges Phones and Jumpstarts Cars" Yuga Tech; Apr. 25, 2014.
"Function and jumpstart short cut Description," axhess GmbH & Co. Kg., date unknown, 1 page.
Ganoza, Laura, "Re: Your Letters on Behalf of Pilot, Inc. to Baccus Global LLC Addressing Pilot Jump Starter Patents," Foley & Lardner, LLP, Dec. 15, 2020, 20 pages.
Goodwin, Antuan "PowerSafe Jumper Cables Take Danger out of Playing with Electricity" Road / Show by Cnet; Nov. 4, 2009.
Holtek "HT75XX-1; 100mA Low Power LDO" Rev. 1.50; Jan. 12, 2006.
"Intelligent Jumper Cable," Shenzhen Carku Technology Co., Ltd., Date Unknown, 1 page.
"JPR Series Jump Starter: JPR-1800M / 2600M / 4500M / 9000M / 9024M," BatteryFighter, 2014.
"Jump Starter Instructions," Shenzhen Carku Technology Co., Ltd., Date Unknown, 1 page.
"Latest News—Projecta website," Brown & Watson International Pty Ltd., 2017, 5 pages.
Lithium Ion Jump Starter, Fuel Pack and Backup Power—Owners Manual; Schumacher Electric Corporation; Date Unknown.
"Lithium Starthilfe Booster Energiestation mit USB—Jump Starter JPR4500," Amazon.com, first available Jan. 26, 2013, 3 pages.
Moynihan, Tim "Small but Mighty Charger Juices Tables and Jump-Starts Cars" Wired: Gear; Apr. 25, 2014.
"MPower Jump Mini User Manual," mPower Technologies, Inc., date unknown, 1 page.
"MPower JUMP User Manual," mPower Technologies, Inc., date unknown, 1 page.
Murphy, David "Jump Start Your Car with Portable 'Jumpr' Device" PCMag; Apr. 25, 2014.
Peak "900 Peak Amp Jump-Starter: Model No. PKC0Az; Owner's Manual and Warranty Information" 2014.
Powerall "Portable Power Bank Battery Jump Starter LED Flashlight—Owner's Manual" Date Unknown.
"PowerSafe Jumper Cables SEMA Global Media Aware Winner" Oct. 23, 2010.
PR Web Online Visibility from Vocus "Groundbreaking NOCO Genius® Boost™ Car Starter Available Commercially Beginning Oct. 6, 2014" Published Sep. 23, 2014.
"Product Review: Pocket Charger/Jump Starter," TexasBowhunter.com, Apr. 16, 2014, 6 pages.
Profi Power Germany "12VDC Mini Jump Start Power Punch: Für Geräte: JPR 9000P, JPR 4500P, JPR 4500 6V, JPR 2600P, JPR 1800P, mit 5v USB 2.0 Power Outlet 2000mA" axhess GmbH & Co. KG, 2013, 25 pages.
Profi Power Germany "12VDC Mini Jump Start Power Punch: Für Geräte: JPR 4500P, JPR 2600P, JPR 1800P" axhess GmbH & Co. KG, 2013, 9 pages.
Profi Power Germany "Power Punch: 12VDC Mini Jump Start—User Manual" axhess GmbH & Co. Kg; 2013: 8 pages.
"Profi Power Starthilfe Mini Jump JPR4500," Amazon.com, first available Jun. 4, 2013, 3 pages.
Projecta "3000A 12/24V High Cranking Sure Start Jumpstarter" Oct. 2011.
Projecta New Projecta Jump Starters Lift the Bar: Apr. 12, 2012.
Ramsey, Jonathon "Smartphone Battery Backup that will Jump Start Your Car" Autoblog; Apr. 28, 2014.
"Redfuel Powered by Schumacher: Model SL1: Lithium Ion Jump Starter, Fuel Pack and Backup Power: Owner's Manual" Date Unknown.
"Redfuel Powered by Schumacher: Model SL65 Jump Starter Arrancador—Owner's Manual" Date Unknown.
"Rescue® Portable Power Pack Instructions," Quick Cable Corporation, before 2014, 20 pages.
"Rescue® Portable Power Pack Model 2100 Product Specifications," QuickCable, as early as 28, 2014, 2 pages.
"RFDPPJS2976DLX Portable Charge—All/Jump Starter User Manual," Rockford Consumer Products, date unknown.
"Rockford PP2976DLXA Portable Power Source—Mini Jump Starter," Amazon.com, date unknown, 14 pages.
Sealey "LSTART Range: 12V Compact Lithium-ion Jump Starts" Date Unknown.
Sema "Tools for Making the Job Quicker, Easier, Better" Sema eNews Vo. 14, No. 34, Aug. 25. 2011.
"SHF12000-12 Instruction Sheet," Hangzhou Haijiu Battery Co. Ltd, prior to Dec. 13, 2013, 3 pages.
"SL1312 Jump Starter/Power Pack Owner's Manual," Schumacher Electric Corporation, date unknown, 35 pages.
"SL1314 Jump Starter/Power Pack Owner's Manual," Schumacher Electric Corporation, date unknown, 35 pages.
"SL1315 Jump Starter/Power Pack Owner's Manual," Schumacher Electric Corporation, date unknown, 24 pages.
"SL1316 Lithium Ion Jump Starter, Fuel Pack and Backup Power Owner's Manual," Schumacher Electric Corporation, date unknown, 32 pages.
"SL1317 Jump Starter Owner's Manual," Schumacher Electric Corporation, date unknown, 35 pages.
"SL1327 Jump Starter Owner's Manual," Schumacher Electric Corporation, date unknown, 35 pages.
"SL1338 Jump Starter/Power Pack Owner's Manual," Schumacher Electric Corporation, date unknown, 35 pages.
"SL1391, SL1398, SL1399 Lithium Ion Tactical Jump Starter Light Owner's Manual," Schumacher Electric Corporation, date unknown, 39 pages.
"SL1391U, SL1398U, SL1399U Lithium Ion Tactical Jump Starter Light Owner's Manual," Schumacher Electric Corporation, date unknown, 111 pages.
"SL1396 Power Pack Owner's Manual," Schumacher Electric Corporation, date unknown, 24 pages.
"Smart Automatic Battery Charger Owner's Manual," Vector Manufacturing, Ltd., date unknown, 12 pages.
"Smart Jumper Cable," Shenzhen Carku Technology Co., Ltd., Date Unknown, 1 page.

Chic Electrics, Exhibit 1001
Shenzhen Chic Electrics v. Pilot

(56) **References Cited**

OTHER PUBLICATIONS

Stanley "450 Amp Jump-Starter With Compressor Instruction Manual," Baccus Global LLC, 2014, 10 pages.
Stanley "Digital Portable Power Station Instruction Manual, DPS109" Baccus Global, Apr. 29, 2009, 10 pages.
Stanley "Lithium-Ion Jump-Starter Instruction Manual, LI1000," Baccus Global, Jul. 28, 2011, 10 pages.
"Startmonkey 400 Quik Start Guide," Powertraveller Limited, date unknown, 2 pages.
"Summary of invalidity defenses against asserted claims of Pilot's U.S. Pat. No. 10,046,653," Date Unknown, 17 pages.
Ward, Mike "Jumper Cables Avoid Surges" Product News; May 1, 2011.
"Why PowerSafe Jumper Cables are Necessary" Energy Safe Technologies; 2011.
Notification to Grant a Patent Right for Utility Model for Chinese Patent Application No. 201420212173.5, dated Jul. 17, 2014.
Ex Parte Quayle Action for U.S. Appl. No. 14/569,352, dated Aug. 31, 2016.
Notice of Allowance for U.S. Appl. No. 14/569,352, dated Oct. 13, 2016.
Office Action for U.S. Appl. No. 15/355,409, dated Dec. 14, 2017.
Office Action for U.S. Appl. No. 15/355,409, dated May 3, 2018.
Notice of Allowance for U.S. Appl. No. 15/355,409, dated Jun. 21, 2018.
Ex Parte Quayle Action for U.S. Appl. No. 15/923,219, dated Jan. 8, 2019.
Notice of Allowance for U.S. Appl. No. 15/923,219, dated Apr. 5, 2019.
Office Action for U.S. Appl. No. 16/404,321, dated Apr. 27, 2020.
Notice of Allowance for U.S. Appl. No. 16/404,321, dated Aug. 26, 2020.
Corrected Notice of Allowance for U.S. Appl. No. 16/404,321, dated Oct. 13, 2020.
Office Action for U.S. Appl. No. 17/236,260 dated Jun. 24, 2021.
Notice of Allowance for U.S. Appl. No. 17/236,260 dated Jul. 12, 2021.
Office Action for U.S. Appl. No. 17/236,279, dated Jul. 30, 2021.
Notice of Allowance for U.S. Appl. No. 17/236,279, dated Sep. 24, 2021.
Office Action for U.S. Appl. No. 17/236,302, dated Jun. 23, 2021.
Office Action for U.S. Appl. No. 17/236,339, dated Jun. 18, 2021.
Notice of Allowance for U.S. Appl. No. 17/236,339, dated Jul. 7, 2021.
Petition for Inter Partes Review of U.S. Pat. No. 9,525,297, including Exhibits 1001-1011; Case No. IPR 2018-00488, filed Jan. 13, 2018 (439 pages).
Documents filed with *Winplus North America, Inc.* v. *Pilot, Inc.*; United States Patent and Trademark Office—Before the Patent Trial and Appeal Board, Case No. IPR 2018-00488; Filed between Jan. 18, 2018-Feb. 6, 2018 (19 pages).
Decision Institution of Inter Partes Review 35 U.S.C. § 314 (a) filed in *Winplus North America, Inc.* v. *Pilot, Inc.*; United States Patent and Trademark Office—Before the Patent Trial and Appeal Board, Case No. IPR 2018-00488; Filed on Jul. 16, 2018 (31 pages).
Documents filed with *Winplus North America, Inc.* v. *Pilot, Inc.*; United States Patent and Trademark Office—Before the Patent Trial and Appeal Board, Case No. IPR 2018-00488; Filed between Jul. 19, 2018-Oct. 24, 2018 (14 pages).
Order Granting Joint Motion to Terminate Proceeding and Granting Joint Request to Treat Settlement Agreement as Business Confidential Information35 U.S.C. § 317; 37 C.F.R. § § 42.72, 42.74 filed in *Winplus North America, Inc.* v. *Pilot, Inc.*; United States Patent and Trademark Office—Before the Patent Trial and Appeal Board, Case No. IPR 2018-00488; Filed on Nov. 16, 2018 (4 pages).
Petition for Inter Partes Review of U.S. Pat. No. 9,007,015, including Exhibits 1001-1018; Case No. IPR 2020-00944, filed May 14, 2020 (1,100 pages).
Documents filed with *Shenzhen Carku Technology Co., Ltd.*, v. *The Noco Company*; United States Patent and Trademark Office—Before the Patent Trial and Appeal Board, Case No. IPR 2020-00944; Filed between May 21, 2020-Aug. 17, 2020 (34 pages).
Patent Owner The Noco Company's Preliminary Response filed with *Shenzhen Carku Technology Co., Ltd.*, v. *The Noco Company*; United States Patent and Trademark Office—Before the Patent Trial and Appeal Board, Case No. IPR 2020-00944; Filed on Aug. 21, 2020 (138 pages).
Documents filed with *Shenzhen Carku Technology Co., Ltd.*, v. *The Noco Company*; United States Patent and Trademark Office—Before the Patent Trial and Appeal Board, Case No. IPR 2020-00944; Filed on Aug. 25, 2020 (8 pages).
Petitioner's Reply Brief filed with *Shenzhen Carku Technology Co., Ltd.*, v. *The Noco Company*; United States Patent and Trademark Office—Before the Patent Trial and Appeal Board, Case No. IPR 2020-00944; Filed on Sep. 1, 2020 (98 pages).
Patent Owner the Noco Company's Preliminary Sur—Reply filed with *Shenzhen Carku Technology Co., Ltd.*, v. *The Noco Company*; United States Patent and Trademark Office—Before the Patent Trial and Appeal Board, Case No. IPR 2020-00944; Filed on Sep. 4, 2020 (125 pages).
Documents filed with *Shenzhen Carku Technology Co., Ltd.*, v. *The Noco Company*; United States Patent and Trademark Office—Before the Patent Trial and Appeal Board, Case No. IPR 2020-00944; Filed from Sep. 16, 2020-Nov. 6, 2020 (46 pages).
Decision Granting Institution of Inter Partes Review filed with *Shenzhen Carku Technology Co., Ltd.*, v. *The Noco Company*; United States Patent and Trademark Office—Before the Patent Trial and Appeal Board, Case No. IPR 2020-00944; Filed on Nov. 12, 2020 (84 pages).
Documents filed with *Shenzhen Carku Technology Co., Ltd.*, v. *The Noco Company*; United States Patent and Trademark Office—Before the Patent Trial and Appeal Board, Case No. IPR 2020-00944; Filed from Nov. 13, 2020-Jan. 14, 2021 (29 pages).
Patent Owner The Noco Company's Response to Petition filed with *Shenzhen Carku Technology Co., Ltd.*, v. *The Noco Company*; United States Patent and Trademark Office—Before the Patent Trial and Appeal Board, Case No. IPR 2020-00944; Filed on Feb. 4, 2021 (507 pages).
Documents filed with *Shenzhen Carku Technology Co., Ltd.*, v. *The Noco Company*; United States Patent and Trademark Office—Before the Patent Trial and Appeal Board, Case No. IPR 2020-00944; Filed from Feb. 5, 2021-Apr. 6, 2021 (184 pages).
Patent Owner the Noco Company's Supplemental Response (Including Exhibit 2024) for *Shenzhen Carku Technology Co., Ltd.*, v. *The Noco Company*; United States Patent and Trademark Office—Before the Patent Trial and Appeal Board, Case No. IPR 2020-00944; Filed Apr. 22, 2021 (124 pages).
Petitioner's Reply to Patent Owner's Response (Including Exhibits 1024-1050) for *Shenzhen Carku Technology Co., Ltd.*, v. *The Noco Company*; United States Patent and Trademark Office—Before the Patent Trial and Appeal Board, Case No. IPR 2020-00944; Filed Apr. 29, 2021 (1,601 pages).
Documents filed with *Shenzhen Carku Technology Co., Ltd.*, v. *The Noco Company*; United States Patent and Trademark Office—Before the Patent Trial and Appeal Board, Case No. IPR 2020-00944; Filed from May 3, 2021-Jul. 12, 2021 (236 pages).
Documents filed with *Shenzhen Carku Technology Co., Ltd.*, v. *The Noco Company*; United States Patent and Trademark Office—Before the Patent Trial and Appeal Board, Case No. IPR 2020-00944; Filed on Jul. 22, 2021 (439 pages).
Documents filed with *Shenzhen Carku Technology Co., Ltd.*, v. *The Noco Company*; United States Patent and Trademark Office—Before the Patent Trial and Appeal Board, Case No. IPR 2020-00944; Filed on Aug. 5, 2021 (16 pages).
Documents filed with *Shenzhen Carku Technology Co., Ltd.*, v. *The Noco Company*; United States Patent and Trademark Office—Before the Patent Trial and Appeal Board; Petitioner's Demonstrative Exhibit; Case No. IPR 2020-00944; Filed on Aug. 9, 2021 (83 pages).
Documents filed with *Shenzhen Carku Technology Co., Ltd.*, v. *The Noco Company*; United States Patent and Trademark Office—Before the Patent Trial and Appeal Board; Case No. IPR 2020-00944; Filed on Aug. 9, 2021 (38 pages).

Chic Electrics, Exhibit 1001
Shenzhen Chic Electrics v. Pilot

(56) **References Cited**

OTHER PUBLICATIONS

Documents filed with *Shenzhen Carku Technology Co., Ltd.*, v. *The Noco Company*; United States Patent and Trademark Office—Before the Patent Trial and Appeal Board; Record of Oral Hearing; Case No. IPR 2020-00944; Filed on Sep. 13, 2021 (95 pages).
Petition for Inter Partes Review of U.S. Pat. No. 10,046,653, including Exhibits 1001-1014; Case No. IPR 2021-00777, filed Apr. 7, 2021 (617 pages).
Documents filed with *The Noco Company, Inc.*, v. *Pilot, Inc.*; United States Patent and Trademark Office—Before the Patent Trial and Appeal Board, Case No. IPR 2021-00777; Filed between Apr. 14-Apr. 30, 2021 (27 pages).
Decision Granting Institution of Inter Partes Review filed with *The Noco Company, Inc.*, v. *Pilot, Inc.*; United States Patent and Trademark Office—Before the Patent Trial and Appeal Board, Case No. IPR 2021-00777; Filed on Oct. 5, 2021 (14 pages).
Scheduling Order filed with *The Noco Company, Inc.*, v. *Pilot, Inc.*; United States Patent and Trademark Office—Before the Patent Trial and Appeal Board, Case No. IPR 2021-00777; Filed on Oct. 5, 2021 (11 pages).
Petition for Inter Partes Review of U.S. Pat. No. 10,046,653 including Exhibits 1001-1011; Case No. IPR IPR 2021-01232, filed Jul. 17, 2021 (737 pages).
Documents filed with *Shenzhen Chic Electrics Co., Ltd.*, v. *Pilot, Inc.*; United States Patent and Trademark Office—Before the Patent Trial and Appeal Board, Case No. IPR 2021-01232; Filed between Jul. 28, 2021-Aug. 5, 2021 (15 pages).
Petition for Inter Partes Review of U.S. Pat. No. 10,328,806 including Exhibits 1001-1012; Case No. IPR 2021-01235, filed Jul. 7, 2021 (479 pages).
Documents filed with *The Noco Company, Inc.*, v. *Pilot, Inc.*; United States Patent and Trademark Office—Before the Patent Trial and Appeal Board, Case No. IPR 2021-01235; Filed between Jul. 19-Jul. 29, 2021 (14 pages).
Documents filed with U.S. District Court Proceedings for *Pilot, Inc.* v. *Winplus North America, Inc.*; U.S. District Court for the District of Colorado; Civil Action No. 1:17-cv-01183; Includes publicly available documents filed from May 12, 2017-Jun. 8, 2017; (36 pages).
Documents filed with U.S. District Court Proceedings for *Pilot, Inc.* v. *Anker Technology Corporation*; U.S. District Court for the District of Colorado; Civil Action No. 1:17-cv-01185; Includes publicly available documents filed from May 12, 2017-Jun. 9, 2017; (37 pages).
Documents filed with U.S. District Court Proceedings for *Pilot, Inc.* v. *Winplus North America, Inc.*; U.S. District Court for the Central District of California; Civil Action No. 5:17-cv-01712; Includes publicly available documents filed from Aug. 23, 2017-Oct. 8, 2018; (593 pages).
Documents filed with U.S. District Court Proceedings for *Pilot, Inc.* v. *Anker Technology Corporation*; U.S. District Court for the Norther District of California; Civil Action No. 4:17-cv-04918; Includes publicly available documents filed from Aug. 23, 2017-Mar. 27, 2018; (130 pages).
Documents filed with U.S. District Court Proceedings for *Pilot, Inc.* v. *Schumacher Electric Corporation*; U.S. District Court for the Norther District of Texas Dallas Division; Civil Action No. 3:19-cv-01676; Includes publicly available documents filed from Jul. 12, 2019-Sep. 6, 2019; (560 pages).
Documents filed with U.S. District Court Proceedings for *Pilot, Inc.* v. *Schumacher Electric Corporation*; U.S. District Court for the Northern District of Illinois Eastern Division; Civil Action No. 1:19-cv-05982; Includes publicly available documents filed from Sep. 6, 2019-Jul. 15, 2020; (1,233 pages).
Defendant Schumacher Electric Corporation's Corrected Initial Noninfringement, Invalidity and Unenforceability Contentions Pursuant to Local Patent Rule (LPR) 2.3—Including Exhibits I.A-I.Q (Redacted) for *Pilot, Inc.* v. *Schumacher Electric Corporation*; U.S. District Court for the Northern District of Illinois Eastern Division; Civil Action No. 1:19-cv-05982; Includes publicly available documents filed Nov. 25, 2019 (729 pages).
Documents filed with U.S. District Court Proceedings for *Pilot, Inc.* v. *Gooloo Technology LLC and Shenzhen Gooloo E-Commerce Co. Ltd.*; U.S. District Court for the Central District of California; Civil Action No. 2:19-cv-09485; Includes publicly available documents filed from Nov. 4, 2019-Jan. 21, 2020; (581 pages).
Documents filed with U.S. District Court Proceedings for *Pilot, Inc.* v. *Aukey Technology Co. Ltd. and Shenzhen Aukey E-Business Co., Ltd.*; U.S. District Court for the Central District of California; Civil Action No. 2:19-cv-09486; Includes publicly available documents filed from Nov. 4, 2019-Apr. 27, 2020; (585 pages).
Documents filed with U.S. District Court Proceedings for *Pilot, Inc.* v. *The Duracell Company*; U.S. District Court for the Northern District of Illinois Eastern Division; Civil Action No. 1:20-cy-04054; Includes publicly available documents filed from Jul. 10, 2020-Aug. 20, 2020; (663 pages).
Documents filed with U.S. District Court Proceedings for *Pilot, Inc.* v. *The Noco Company, Inc.*; U.S. District Court For the District of Arizona; Civil Action No. 2:20-cv-01452; Includes publicly available documents filed from Jul. 22, 2020-Apr. 21, 2021; (2,799 pages).
Documents filed with U.S. District Court Proceedings for *Pilot, Inc.* v. *The Noco Company, Inc.*; U.S. District Court For the District of Arizona; Civil Action No. 2:20-cv-01452; Includes publicly available documents filed from Apr. 22, 2021-Jun. 11, 2021; (1,676 pages).
Documents filed with U.S. District Court Proceedings for *Pilot, Inc.* v. *The Noco Company, Inc.*; U.S. District Court For the District of Arizona; Civil Action No. 2:20-cv-01452, Includes publicly available documents filed on Aug. 6, 2021; (19 pages).
Documents filed with U.S. District Court Proceedings for *Pilot, Inc.* v. *The Noco Company, Inc.*; U.S. District Court For the District of Arizona; Civil Action No. 2:20-cv-01452; Includes publicly available documents filed from Aug. 20, 2021-Sep. 15, 2021; (13 pages).
Documents filed with U.S. District Court Proceedings for *Pilot, Inc.* v. *Battery-Biz, Inc.*; U.S. District Court Central District of California; Civil Action No. 2:20-cv-10207; Includes publicly available documents filed from Nov. 6, 2020-Jan. 29, 2021; (733 pages).
Documents filed with U.S. District Court Proceedings for *Pilot, Inc.* v. *Baccus Global LLC*; U.S. District Court for the Southern District of Florida West Palm Beach Division; Civil Action No. 9:21-cv-81009; Includes publicly available documents filed from Jun. 7, 2021-Jul. 30, 2021; (1,543 pages).
U.S. Appl. No. 14/569,352, filed Dec. 12, 2014 U.S. Pat. No. 9,525,297.
U.S. Appl. No. 15/355,409, filed Nov. 18, 2016 U.S. Pat. No. 10,046,653.
U.S. Appl. No. 15/923,219, filed Mar. 16, 2018 U.S. Pat. No. 10,328,806.
U.S. Appl. No. 16/404,321, filed May 6, 2019 U.S. Pat. No. 10,875,410.
U.S. Appl. No. 17/131,113, filed Dec. 22, 2020.
U.S. Appl. No. 17/236,260, filed Apr. 21, 2021 U.S. Pat. No. 11,124,077.
U.S. Appl. No. 17/236,279, filed Apr. 21, 2021.
U.S. Appl. No. 17/236,302, filed Apr. 21, 2021.
U.S. Appl. No. 17/236,339, filed Apr. 21, 2021 U.S. Pat. No. 11,104,236.
Pilot, Inc. v. *Winplus North America, Inc.*; U.S. District Court for the District Court of Colorado; Civil Action No. 1:17-cv-01183.
Pilot, Inc. v. *Anker Technology Corporation*; U.S. District Court for the District of Colorado: Civil Action No. 1:17-cv-01185.
Pilot, Inc. v. *Winplus North America, Inc.*; U.S. District Court for the Central District of California; Civil Action No. 5:17-cv-01712.
Pilot, Inc. v. *Anker Technology Corporation*; U.S. District Court for the Northern District of California; Civil Action No. 4:17-cv-04918.
Pilot, Inc. v. *Schumacher Electric Corporation*; U.S. District Court for the Northern District of Texas Dallas Division; Civil Action No. 3:19-cv-01676.
Pilot, Inc. v. *Schumacher Electric Corporation*; U.S. District Court for the Northern District of Illinois Eastern Division; Civil Action No. 1:19-cv-05982.

Chic Electrics, Exhibit 1001
Shenzhen Chic Electrics v. Pilot

(56) **References Cited**

OTHER PUBLICATIONS

Pilot, Inc. v. *Gooloo Technology LLC and Shenzen Gooloo E-Commerce Co., Ltd.*; U.S. District Court Central District of California: Civil Action No. 2:19-cv-09485.
Pilot, Inc. v. *Aukey Technology Co., Ltd. and Shenzhen Aukey E-Business Co., Ltd.*; U.S. District Court Central District of California; Civil Action No. 2:19-cv-09486.
Pilot, Inc. v. *The Duracell Company*; U.S. District Court for the Northern District of Illinois Eastern Division; Civil Action No. 1:20-cv-04054.
Pilot, Inc. v. *The Noco Company, Inc.*; U.S. District Court for the District of Arizona; Civil Action No. 2:20-cv-01452.
Pilot, Inc. v. *Battery-Biz, Inc.*; U.S. District Court Central District of California, Civil Action No. 2:20-cv-10207.
Pilot, Inc. v. *Baccus Global LLC*, U.S. District Court for the Southern District of Florida West Palm Beach Division; Civil Action No. 9:21-cv-81009.
Inter Partes Review—*Winplus North America, Inc.* v *Pilot, Inc.*; United States Patent and Trademark Office—Before the Patent Trial and Appeal Board, Case No. IPR2018-00488.
Inter Partes Review—*Shenzhen Carku Technology Co., Ltd.* v. *The Noco Company*; United States Patent and Trademark Office—Before the Patent Trial and Appeal Board, Case No. IPR2020-00944.
Inter Partes Review—*The Noco Company, Inc.* v *Pilot, Inc.*; United States Patent and Trademark Office—Before the Patent Trial and Appeal Board, Case No. IPR2021-00777.
Inter Partes Review—*Shenzhen Chic Electrics Co., Ltd.*, v *Pilot, Inc.*; United States Patent and Trademark Office—Before the Patent Trial and Appeal Board, Case No. IPR82021-01232.
Inter Partes Review—*The Noco Company, Inc.*, v *Pilot, Inc.*; United States Patent and Trademark Office—Before the Patent Trial and Appeal Board, Case No. IPR2021-01235.

* cited by examiner

Chic Electrics, Exhibit 1001
Shenzhen Chic Electrics v. Pilot

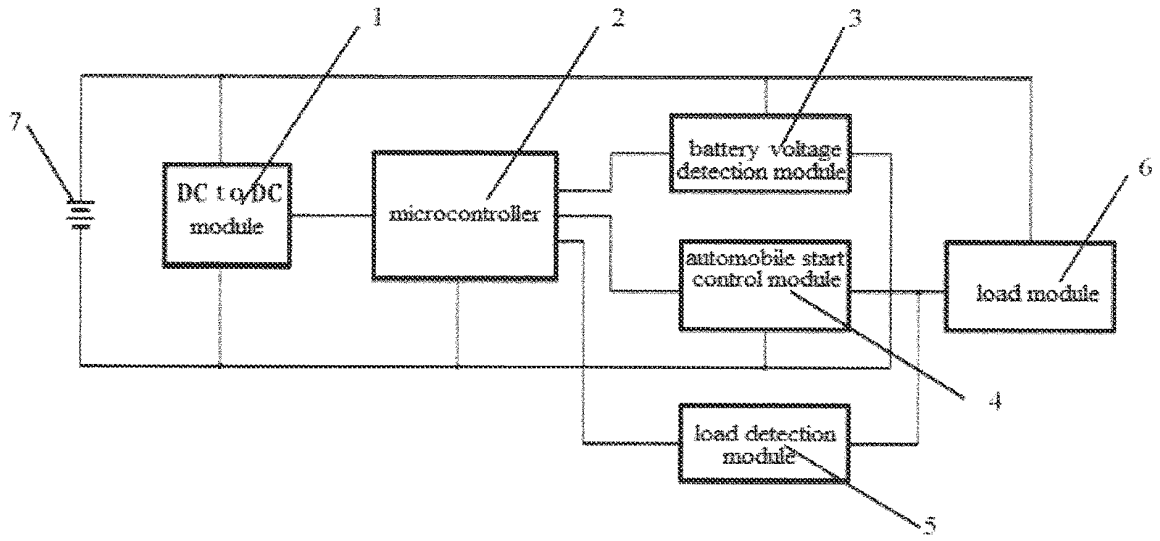

Figure 1

Chic Electrics, Exhibit 1001
Shenzhen Chic Electrics v. Pilot

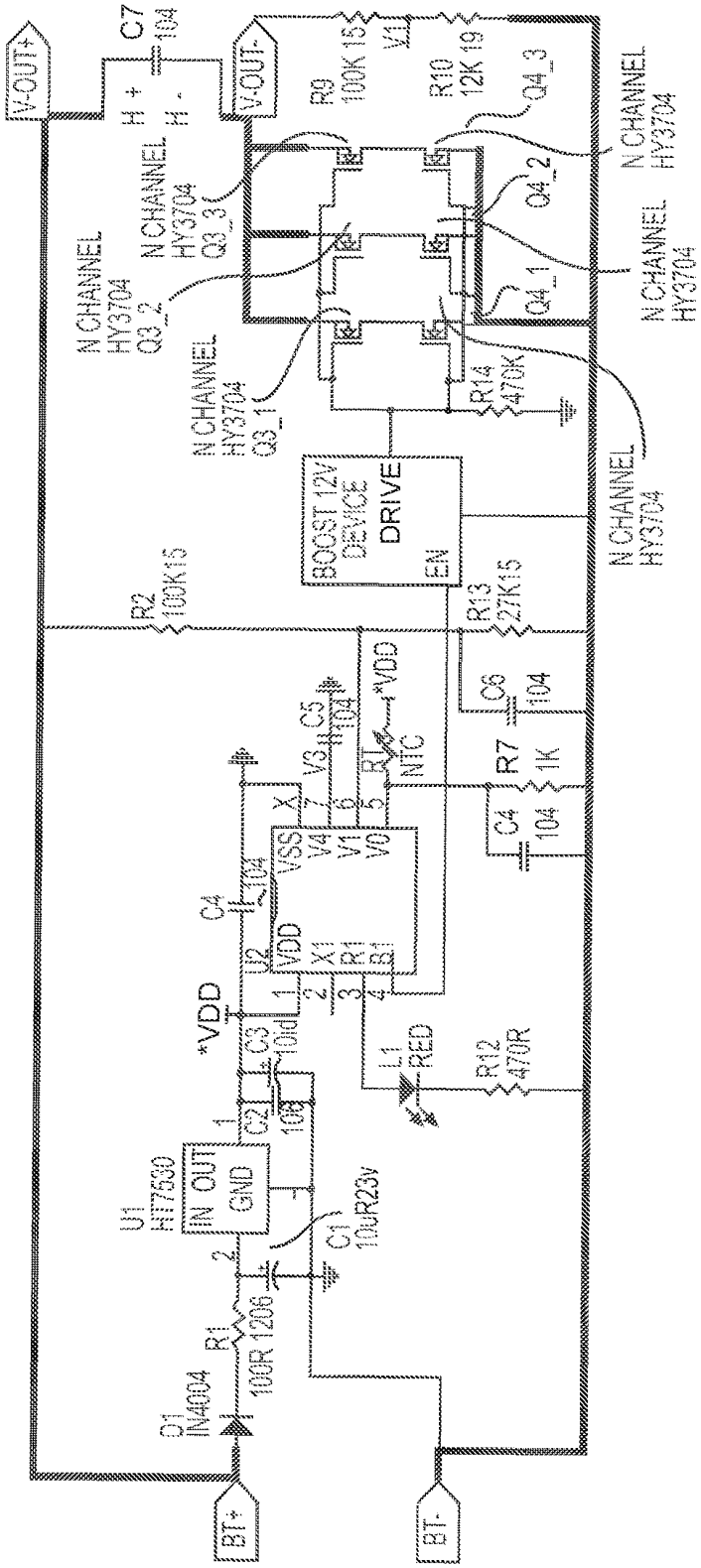

Figure 2

Chic Electrics, Exhibit 1001
Shenzhen Chic Electrics v. Pilot

AUTOMOBILE CHARGER

RELATED APPLICATIONS

This application is a Continuation of U.S. patent application Ser. No. 17/131,113, filed Dec. 22, 2020, which is a Continuation of U.S. patent application Ser. No. 16/404,321, filed May 6, 2019, now U.S. Pat. No. 10,875,410, which is a Continuation of U.S. patent application Ser. No. 15/923,219, filed Mar. 16, 2018, now U.S. Pat. No. 10,328,806, which is a Continuation of U.S. patent application Ser. No. 15/355,409, filed Nov. 18, 2016, now U.S. Pat. No. 10,046,653, which is a Continuation of U.S. patent application Ser. No. 14/569,352, filed Dec. 12, 2014, now U.S. Pat. No. 9,525,297, which claims the benefit of priority of Chinese application no. 201420212173.5 filed Apr. 28, 2014, the entire contents of each are incorporated herein by reference.

BACKGROUND

The present disclosure relates to an automobile charging device, in particular relates to a novel automobile charger with a safe power supply charging quickly.

Automobile charging is a big issue of traveling by automobile for those automobile fans and businessmen, the maturity of the technology thereof is one of the critical factors restricting the application of the automobile charger. However, current automobile chargers have common problems of not able to automatically detect whether a load is connected, whether an electrode is connected with an automobile storage battery reversely, whether an automobile engine or the storage battery has a reverse current, whether the battery state is suitable for heavy current power generation and so on. Accordingly, the present disclosure provides a novel automobile charger with the safe power supply charging quickly to solve the problems mentioned above, thus making the automobile charging safe, quick, mature and propagable.

SUMMARY

A purpose of the present disclosure aims to provide a novel automobile charger with the safe power supply charging quickly, in order to solve the problems presented in the above background.

To achieve the purpose described above, the present disclosure provides the following technical solutions: a novel automobile charger comprises a direct current power supply, wherein a positive pole of the direct current power supply is connected with one end of a DC to DC module, one end of a battery voltage detection module and one end of a load module simultaneously, while a negative pole of the direct current voltage is connected with the other end of the DC to DC module, one end of a micro controller, one end of an automobile start control module and the other end of the battery voltage detection module simultaneously. A third end of the DC to DC module is connected with the other end of the microcontroller, and the other three ends of the microcontroller are connected with the third end of the battery voltage detection module, the other end of the automobile start control module and one end of the load detection module respectively, wherein the other end of the load detection module is connected with the third end of the automobile start control module and the other end of the load module simultaneously; the load module which comprises the automobile storage battery and the automobile engine is located on the end of the load module.

As a further solution of the present disclosure that: the DC to DC module provides a stable voltage for the microcontroller which collects relevant data to conduct the corresponding control. The battery voltage detection module conducts the measurement of the batter voltage, the automobile start control module conducts the power supply or the power outage for the load module through the microcontroller, and the load detection module which comprises the automobile storage battery or the automobile engine detects whether the load module is correctly connected.

As a further solution of the present disclosure that: the circuit employs an electronic switch to supply power to the load module, which can offer more protection for the product, or reduce the product size and the material cost.

As a further solution of the present disclosure that: the battery voltage detection module provides protection for the power supply battery to prevent damages caused by the discharging of the direct current power supply.

As a further solution of the present disclosure that: the load detection module prevents improper operations of the user.

As a further solution of the present disclosure that: in the standby mode, the microcontroller closes all outputs when the voltage of the direct current power supply is lower than that of the state being able to supply power and then recovers when it is higher than that of the state being able to supply power.

As a further solution of the present disclosure that: the automobile start control module is the electronic switch.

Compared to the prior art, the present disclosure has the beneficial effects that:

1. The present disclosure employs the electronic switch to control the supply power for the load, this part can offer more protection for the product, and reduce the product size and the material cost.
2. The battery detection of the present disclosure can provide low voltage protection to prevent damages caused by the over discharging of the battery.
3. The load detection of the present disclosure can prevent improper operations by the user, such as reversed polarity, which causes damages to the automobile or the direct current power supply.
4. The present disclosure employs the voltage backflow protection for abnormal load, wherein the automobile start line is closed to protect the battery when the abnormal voltage is detected.
5. The present disclosure has a fast charging function, and can be installed fixedly or moved portably according to the use requirements of people.
6. The automatic detection module of the present disclosure can automatically detects whether the load is connected, whether the electrode is connected with the automobile storage battery reversely, whether the automobile engine or the storage battery has reverse current, whether the battery state is suitable for heavy current power generation, thereby protecting the load and the circuit and thus has complete functions.

BRIEF DESCRIPTION OF DRAWINGS

FIG. **1** is a block diagram for the principle of the emergency power supply of the safe intelligent automobile;

FIG. **2** is a circuit diagram for the emergency power supply of the safe intelligent automobile.

In figures: **1**—DC to DC module, **2**—microcontroller, **3**—battery voltage detection module, **4**—automobile start

Chic Electrics, Exhibit 1001
Shenzhen Chic Electrics v. Pilot

control module, **5**—load detection module, **6**—load module, **7**—direct current power supply.

DETAILED EMBODIMENTS

The technical solutions of the present disclosure will be described more clearly and fully in conjunction with drawings in the embodiments of the present disclosure, and obviously, the described embodiments are merely a part of the embodiments of the present disclosure, not all the embodiments. Based on the embodiments of the present disclosure, all the other embodiments obtained by the ordinary skilled in the art without creative labors belong to the scope claimed by the present disclosure.

Refer to FIG. **1**, a novel automobile charger comprises a direct current power supply, wherein the positive pole of the direct current power supply is connected with one end or lead of the DC to DC module, one end of the battery voltage detection module and one end of the load module simultaneously, while the negative pole of the direct current voltage is connected with the other end of the DC to DC module, one end of the microcontroller, one end of the automobile start control module and the other end of the battery voltage detection module simultaneously. A third end of the DC to DC module is connected with the other end of the microcontroller, and the other three ends of the microcontroller are connected with the third end of the battery voltage detection module, the other end of the automobile start control module and one end of the load detection module respectively, wherein the other end of the load detection module is connected with the third end of the automobile start control module and the other end of the load module simultaneously; the load module which comprises the automobile storage battery and the automobile engine is located on the end of the load module.

Refer to FIG. **2**, the DC to DC module comprises a diode D**1**, a resistor R**1**, capacitor C**1**, a HT7530 voltage stabilizing tube, capacitors C**2** and C**3**, wherein the positive pole of the diode D**1** is connected with the positive pole of the battery, the negative pole of the diode D**1** is connected with one end of the capacitor C**1** and an IN port of the HT7530 voltage stabilizing tube simultaneously through the resistor R**1**, and an OUT port of the HT7530 voltage stabilizing tube is connected with one end of the capacitor C**2**, one end of the capacitor C**3** and a VDD port of the microcontroller U**2**, while the other end of the capacitor C**1**, the other end of the capacitor C**2** and the other end of the capacitor C**3** as well as a GND port of the HT7530 voltage stabilizing tube are grounded and connected with the negative pole of the battery simultaneously; a R**1** port of the microcontroller U**2** is connected with the negative pole of the battery through a light-emitting diode L**1** and a resistor R**12** which are in series connection, a B**1** port of the microcontroller U**2** is connected with a EN port of the automobile start control module, a V**0** port of the microcontroller U**2** is connected with the negative pole of the battery through a capacitor C**4** and a resistor R**7** which are in parallel connection, the V**0** port is also connected with the VDD port through a slide rheostat RT, a V**1** port of the microcontroller U**2** is also connected with the negative pole of the battery through a resistor **10**, a capacitor C**6** and a resistor R**13** which are in parallel connection, the V**1** port is connected with the positive pole of the battery through a resistor R**2**, and is also connected with the negative pole of the automobile storage battery and the automobile engine simultaneously through a resistor R**9**, wherein two ends of the automobile storage battery are in parallel connection with the capacitor C**7**, resistors R**9**, **10**, a capacitor C**6** and a resistor R**13** to form the load detection module together, a V**4** port of the microcontroller U**2** is grounded through a capacitor C**5**, a VSS port of the microcontroller U**2** and one end of the capacitor C**4** are grounded simultaneously. The other end of the capacitor C**4** is connected with the VDD port of the microcontroller U**2**, the resistors R**2**, R**13** and capacitor C**6** form the battery voltage detection module together, and a Drive port of the automobile start control module is connected with the automobile engine and one end of a resistor R**14** simultaneously, wherein the other end of the resistor R**14** is grounded.

The DC to DC module in the present disclosure provides the stable voltage for the microcontroller which collects relevant data to conduct the corresponding control. The battery voltage detection module conducts the measurement of the batter voltage, and the automobile start control module conducts the power supply or the power outage for the load module through the microcontroller, wherein the load detection module detects whether the load module is correctly connected.

The microcontroller in the present disclosure determines whether the automobile storage battery is connected with the automobile engine through the load detection module, wherein the automobile start control model is automatically activated and the battery starts to supply power to the load module when the load is correctly connected; the automobile start control model is automatically deactivated and the battery stops supplying power to the load module when assuming that the load is not connected or the positive and negative polarities are reversely connected. In the standby mode, the microcontroller closes all outputs when the battery voltage is lower than 9V, and recovers the normal operation only when the battery voltage is larger than 10V; the automobile engine will generate the normal voltage to recharge the battery after the automobile starts, whereas the automobile start control module is deactivated immediately once the recharging voltage is larger than the voltage before that battery starts the power supply, to protect the battery from damages caused by charging with the normal voltage; the automobile start control module is the electronic switch, which can prevent the load from being reversely connected and recharging of the normal voltage, thus protecting the battery and prolonging lifespan.

The automobile engine will generate abnormal voltage to recharge the direct current power supply after the automobile starts, and the automobile start control module is deactivated immediately once the recharging voltage is larger than the voltage before the direct current power supply starts the power supply, to protect the direct current power supply from damages caused by charging with normal voltage charge.

It is obvious for the skilled people in the art that the present disclosure is not merely limited to the details of the above exemplary embodiments, and the present disclosure can be implemented in other specific forms without departing from the sprits or the basic features of the present disclosure. Thus, no matter to consider from which point of view, the embodiments should be considered as exemplary and non-limiting. The scope of the present disclosure is defined by the accompanying Claims rather than the above description, therefore it is intended that all the changes fallen within the meanings and scope of the equivalent elements of the Claims are contained in the present disclosure. Any drawing reference in the Claims should not be regarded as limiting the Claims involved.

Chic Electrics, Exhibit 1001
Shenzhen Chic Electrics v. Pilot

Furthermore, it should be understood that although the specification is described according to the embodiments, but not every embodiment includes only an independent technical solution, this manner of description for the specification is only for clarity, therefore the skilled people in the art should take the Specification as a whole, and the technical solutions in various embodiments can be combined appropriately to form other implementations understandable for those skilled in the art.

What is claimed is:

1. A jumpstarter comprising:

a battery connected to a voltage regulator, the battery capable of supplying power, via the voltage regulator, to at least one microcontroller, the battery also capable of supplying power to an automobile battery when the battery has at least one predetermined voltage;

a load detector circuit to detect when the jumpstarter is correctly connected to the automobile battery;

said at least one microcontroller generating, when the battery has said at least one predetermined voltage, an output signal; and

switching circuitry, including at least one switch, to operatively connect the battery to the automobile battery when said at least one microcontroller generates the output signal to supply a charging current to the automobile battery.

2. The jumpstarter of claim **1**, further comprising a battery voltage detector circuit to detect a battery voltage of the battery.

3. The jumpstarter of claim **1**, wherein the at least one switch is one or more MOSFETs.

4. The jumpstarter of claim **3**, wherein the one or more MOSFETSs are n-channel MOSFETs.

5. The jumpstarter of claim **3**, wherein the plurality of MOSFETs are connected in a series-parallel topology.

6. The jumpstarter of claim **1**, wherein there are a plurality of switches.

7. The jumpstarter of claim **1**, wherein the at least one switch is a plurality of MOSFETs and wherein the plurality of MOSFETs are connected in parallel.

8. The jumpstarter of claim **1**, further comprising a load detector to detect a reverse polarity connection to the automobile battery.

9. The jumpstarter of claim **1**, wherein said at least ono microcontroller includes a standby mode where all outputs are closed.

10. The jumpstarter of claim **9**, wherein the jumpstarter is not in a standby mode when the battery has more than 10 volts.

11. The jumpstarter of claim **1**, further composing a start control module to stop supplying battery power when there is no load.

12. The jumpstarter of claim **1**, wherein the at least one switch switches a negative voltage and the at least one switch is connected to a negative battery terminal.

13. The jumpstarter of claim **1**, wherein the jumpstarter has a fast-charging function.

14. The jumpstarter of claim **1**, further comprising a voltage back-flow protection.

15. The jumpstarter of claim **14**, wherein the voltage back-flow protection is for an abnormal load.

16. The jumpstarter of claim **1**, wherein said at least one microcontroller determines whether a battery state is suitable for a heavy current power generation.

17. A jumpstarter comprising:

a first battery connected to a voltage regulator, the first battery capable of supplying power, via the voltage regulator, to at least one microcontroller, the first battery also capable of supplying power to an automobile battery when the first battery has at least one predetermined voltage;

a battery level detector to detect a level of the first battery;

a load detector to detect a type of connection of a load;

a microcontroller of said at least one microcontroller to generate an output signal only when the first battery has said at least one predetermined voltage; and

switching circuitry, including at least one switch, to operatively connect the first battery to the automobile battery when the microcontroller generates the output signal to supply a charging current to the automobile battery.

18. A jumpstarter comprising:

an output port having a positive polarity output and a negative polarity output;

an internal power supply connected to a voltage regulator, the internal power supply capable of supplying power, via the voltage regulator, to at least one microcontroller, the internal power supply also capable of supplying power to said output port when the internal power supply has at least one predetermined voltage;

a load detection sensor connected in circuit with said positive polarity output and said negative polarity output, configured to detect presence of a vehicle battery connected between said positive polarity output and said negative polarity output;

a reverse polarity sensor connected in circuit with said positive polarity output and said negative polarity output, configured to detect polarity of d vehicle battery connected between said positive polarity output and said negative polarity output and to provide an output signal indicating whether a positive terminal and a negative terminal of said vehicle battery are properly connected with said positive polarity output and said negative polarity output of said output port;

a power switch connected between said internal power supply and said output port; and

a microcontroller of said at least one microcontroller configured to provide an output signal to said power switch, such that said power switch is turned on to cause said internal power supply to be connected to said output port in response to signals from said load detection sensor and said reverse polarity sensor indicating the presence of a vehicle battery at said output port and proper polarity connections of the positive terminal and the negative terminal of said vehicle battery with said positive polarity output and said negative polarity output, and is not turned on when signals from said load detections sensor and said reverse polarity sensor indicate either the absence of a vehicle battery at said output port or improper polarity connections of the positive terminal and the negative terminal of said vehicle battery with said positive polarity output and said negative polarity output.

19. The jumpstarter of claim **18**, further comprising a voltage detector circuit to detect a voltage of the internal power supply.

20. The jumpstarter of claim **18**, wherein there are a plurality of power switches.

21. The jumpstarter of claim **18**, wherein the load detection sensor and the reverse polarity sensor are the same sensor.

22. The jumpstarter of claim **21**, wherein the load detection sensor and the reverse polarity sensor are a voltage detector circuit.

Chic Electrics, Exhibit 1001
Shenzhen Chic Electrics v. Pilot

23. The jumpstarter of claim **22**, wherein the power switch switches a negative voltage and the power switch is connected to a negative battery terminal.

24. The jumpstarter of claim **18**, wherein the microcontroller includes a standby mode where all outputs are closed.

25. The jumpstarter of claim **24**, wherein the jumpstarter is not in a standby mode when the internal power supply has more than 10 volts.

26. The jumpstarter of claim **18**, further composing a start control module to prevent supplying power when there is no load.

27. The jumpstarter of claim **18**, wherein the power switch switches a negative voltage and the power switch is connected to a negative battery terminal.

28. The jumpstarter of claim **18**, wherein the jumpstarter has a fast-charging function.

29. The jumpstarter of claim **18**, further comprising a voltage back-flow protection.

30. The jumpstarter of claim **18**, wherein the microcontroller determines whether a battery state is suitable for a heavy current power generation.

* * * * *

Chic Electrics, Exhibit 1001
Shenzhen Chic Electrics v. Pilot