US 20100173182A1

(19) United States

(12) Patent Application Publication

(10) Pub. No.: US 2010/0173182 A1

(43) Pub. Date: Jul. 8, 2010

Baxter et al.

(54) **LOW-VOLTAGE CONNECTION WITH SAFETY CIRCUIT AND METHOD FOR DETERMINING PROPER CONNECTION POLARITY**

(76) Inventors: **Michael Baxter**, Hillsboro, OR (US); **Mark Walker**, Hillsboro, OR (US)

Correspondence Address:
Michael F. Krieger
Kirton & McConkie
60 East South Temple, Suite 1800
Salt Lake City, UT 84111 (US)

(21) Appl. No.: **12/731,041**

(22) Filed: **Mar. 24, 2010**

Related U.S. Application Data

(63) Continuation-in-part of application No. 12/559,357, filed on Sep. 14, 2009.

(60) Provisional application No. 61/175,696, filed on May 5, 2009, provisional application No. 61/118,511, filed on Nov. 28, 2008.

Publication Classification

(51) **Int. Cl.**

H02H 7/18	(2006.01)
H02H 9/02	(2006.01)
H02H 3/04	(2006.01)
H01M 2/00	(2006.01)

(52) **U.S. Cl.** **429/61**; 361/101; 361/93.9

(57) **ABSTRACT**

A safety circuit for use in low-voltage systems improves safety of and additional features to low-voltage connections. When incorporated into a battery, the circuit leaves the battery disconnected from the low-voltage system until it determines that it is safe to make a connection. When the safety circuit determines that no unsafe conditions exist and that it is safe to connect the battery, the safety circuit may connect the battery by way of a "soft start" that provides a connection over a period of time that reduces or prevents inductive voltage spikes on the low-voltage system. A method is used for detection of proper polarity of the connections between the battery and the low-voltage system. When incorporated into a jumper cable, the safety circuit provides communication abilities, can provide test abilities, and improves connection safety and functionality, such as allowing transfer of power between low-voltage systems having different voltages.

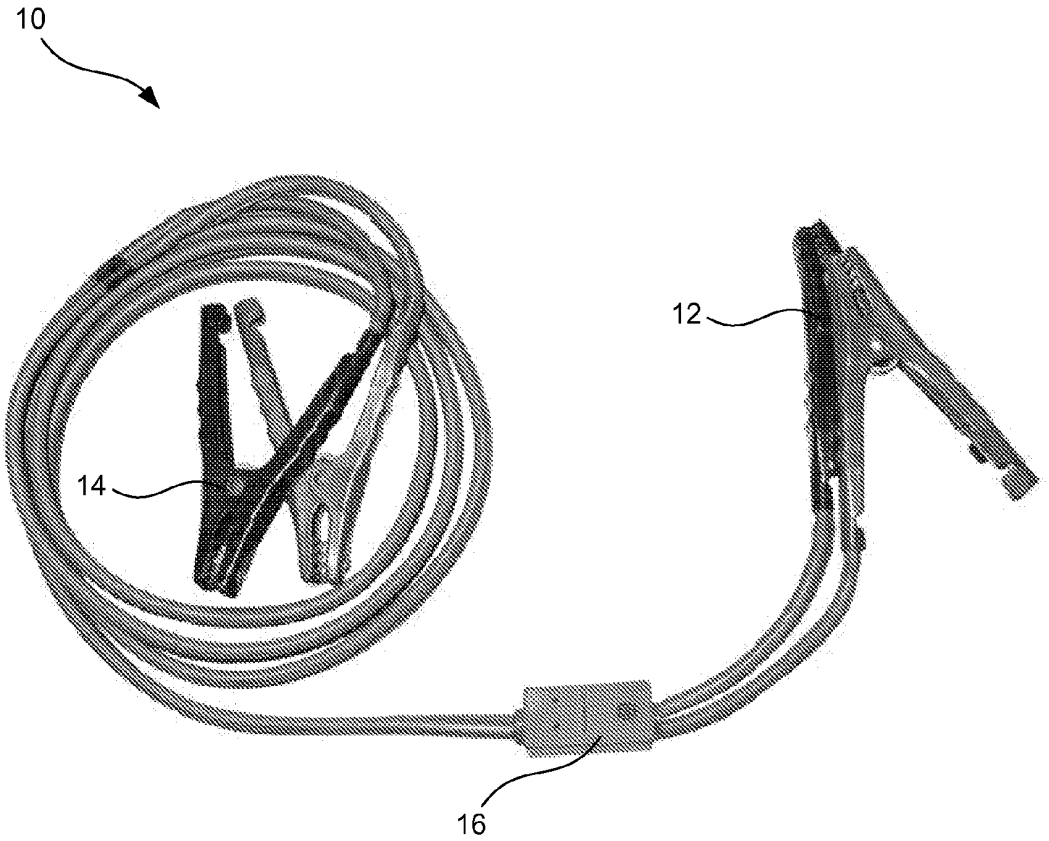

Chic Electrics, Exhibit 1008
Shenzhen Chic Electrics v. Pilot

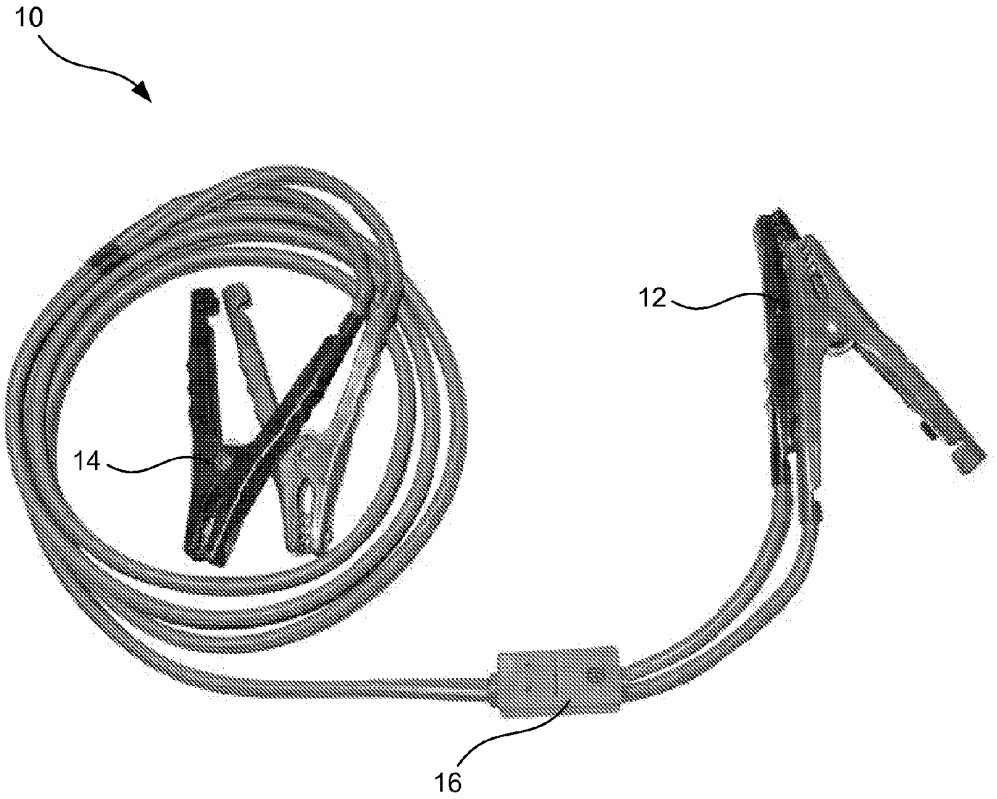

FIG. 1

Chic Electrics, Exhibit 1008
Shenzhen Chic Electrics v. Pilot

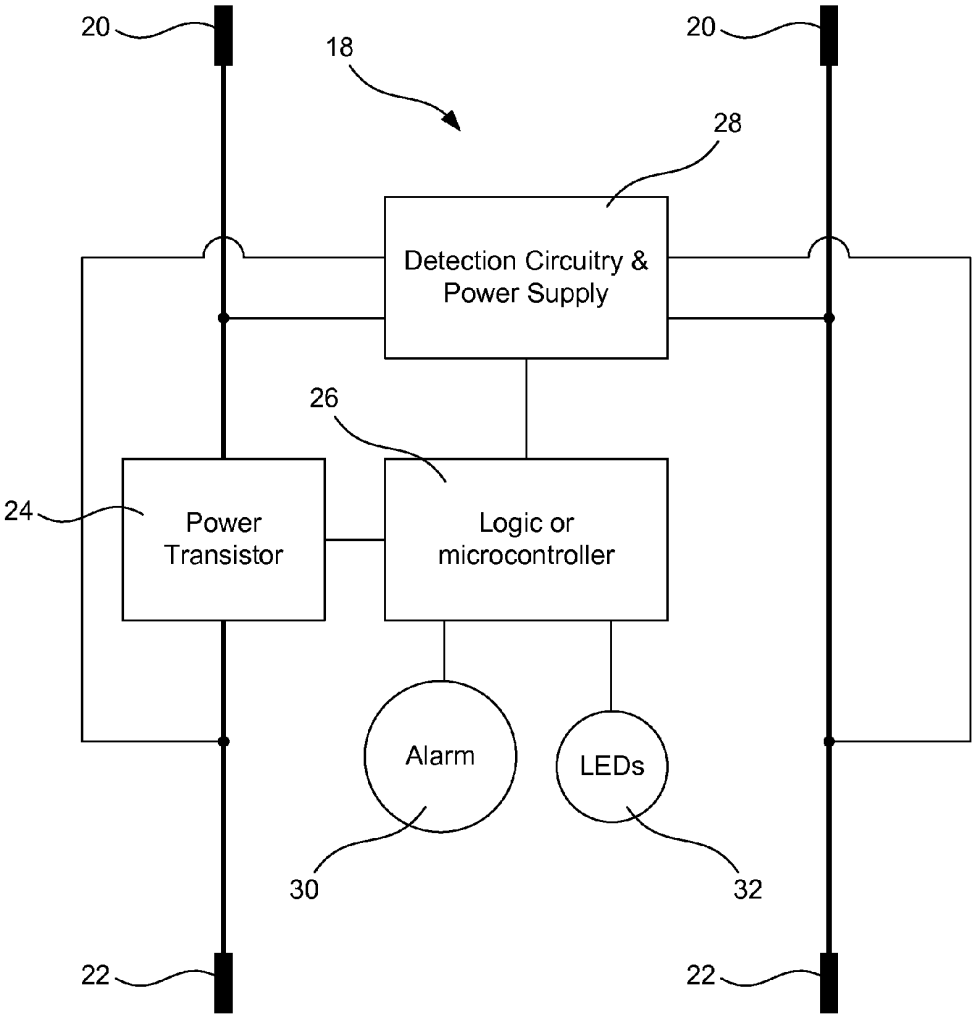

FIG. 2

Chic Electrics, Exhibit 1008
Shenzhen Chic Electrics v. Pilot

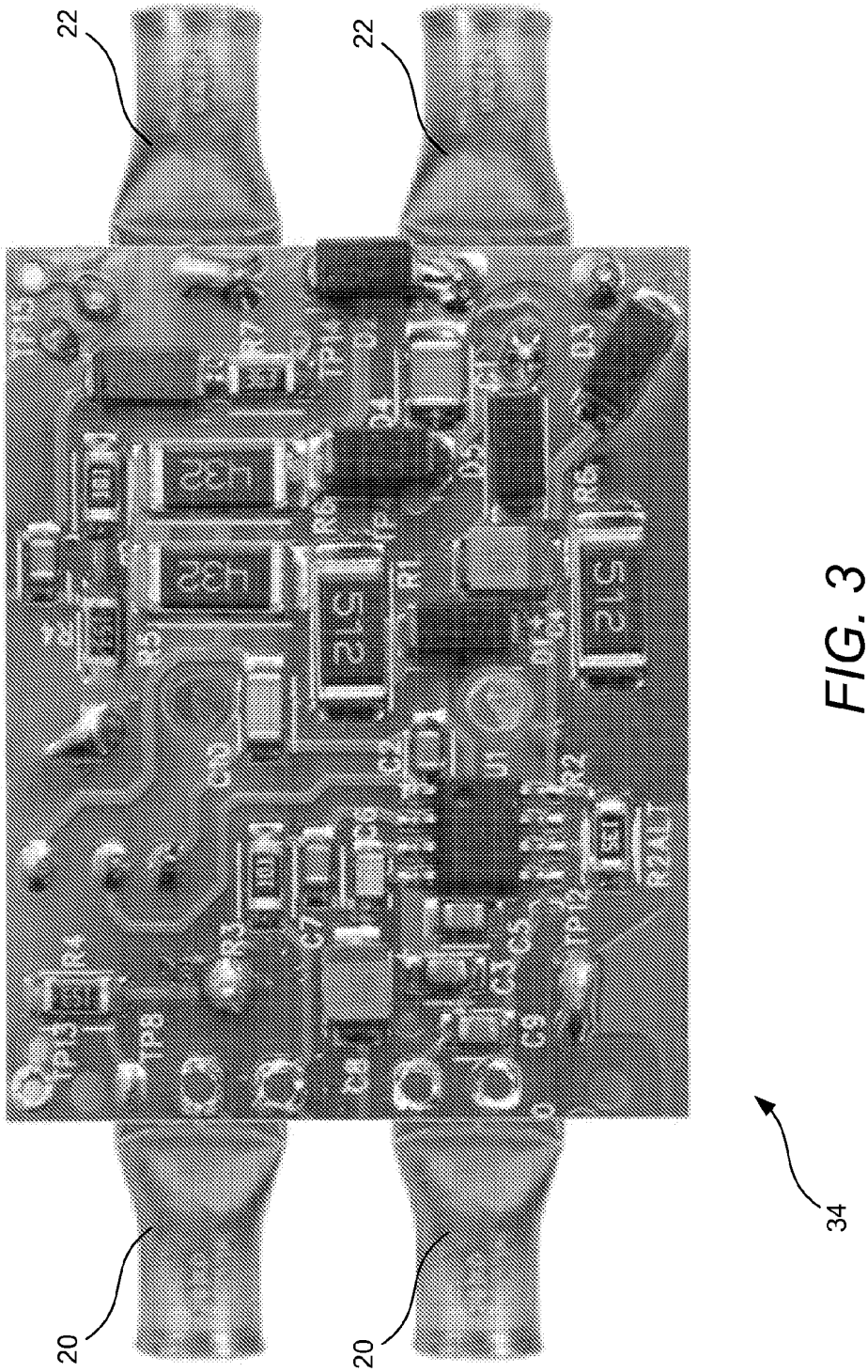

FIG. 3

Chic Electrics, Exhibit 1008
Shenzhen Chic Electrics v. Pilot

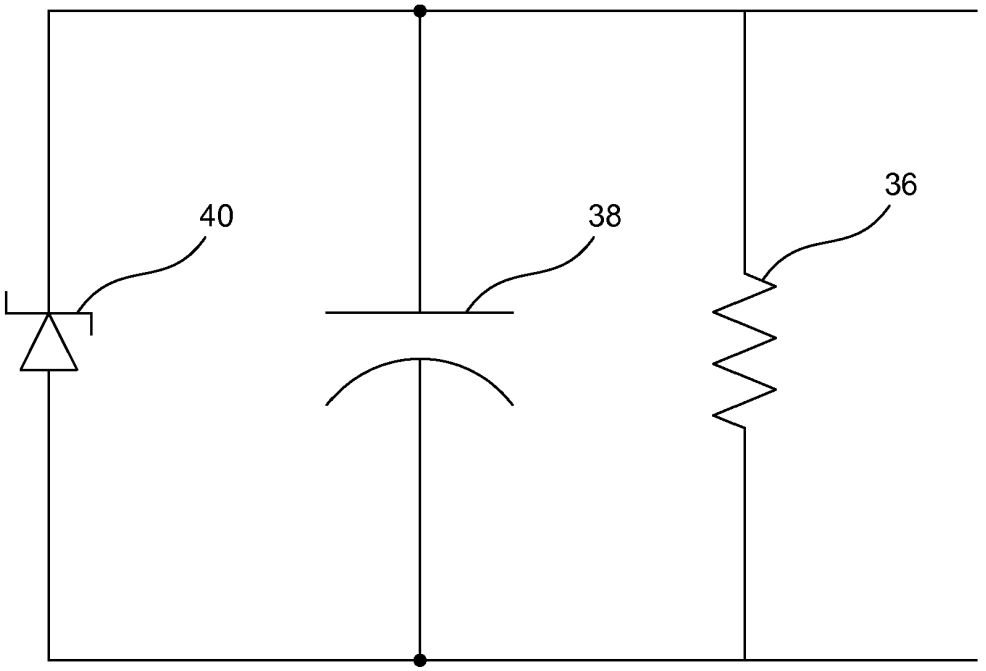

FIG. 4

Chic Electrics, Exhibit 1008
Shenzhen Chic Electrics v. Pilot

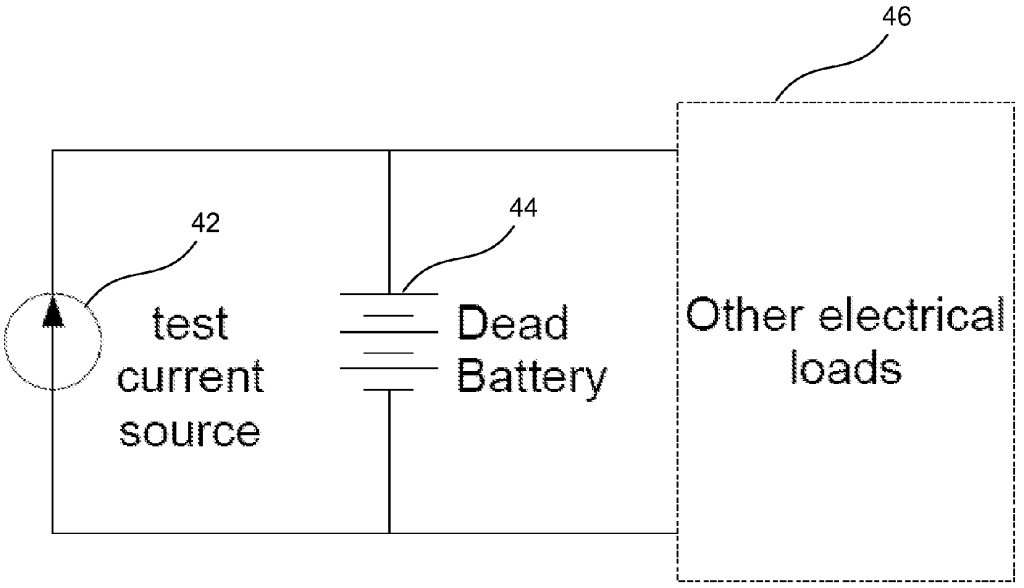

Single test current direction

FIG. 5

Chic Electrics, Exhibit 1008
Shenzhen Chic Electrics v. Pilot

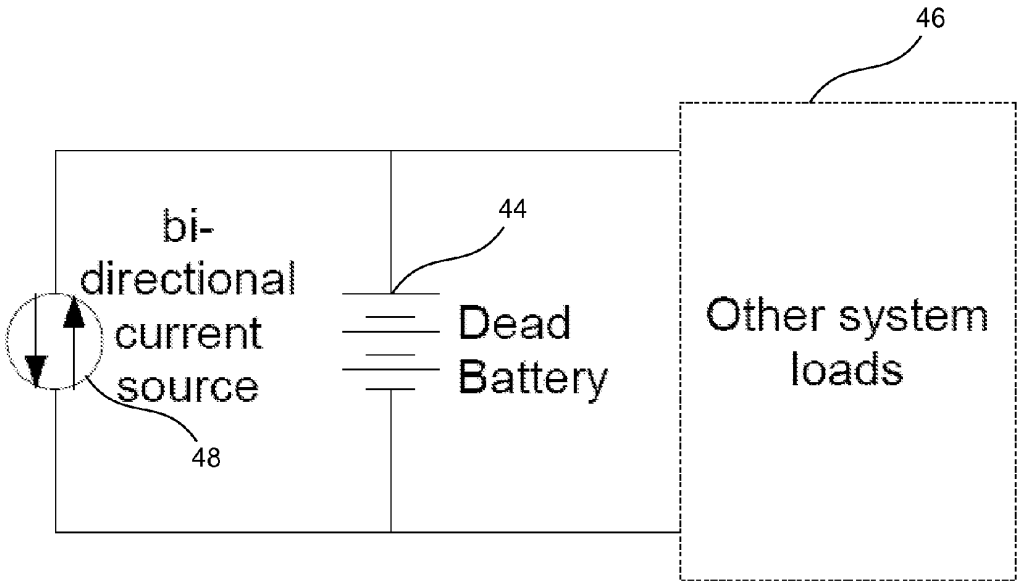

Bi-directional test current direction

FIG. 6

Chic Electrics, Exhibit 1008
Shenzhen Chic Electrics v. Pilot

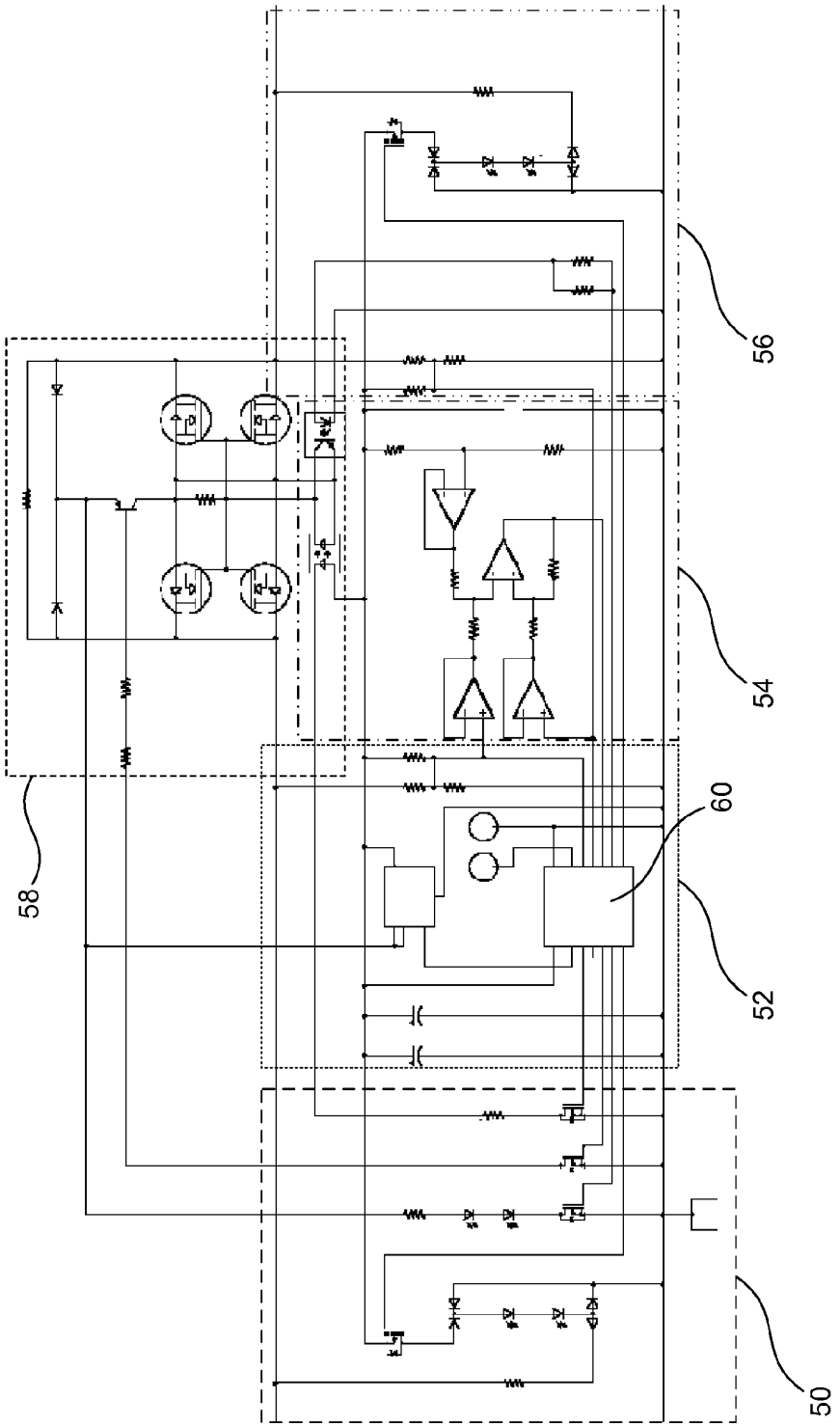

FIG. 7

Chic Electrics, Exhibit 1008
Shenzhen Chic Electrics v. Pilot

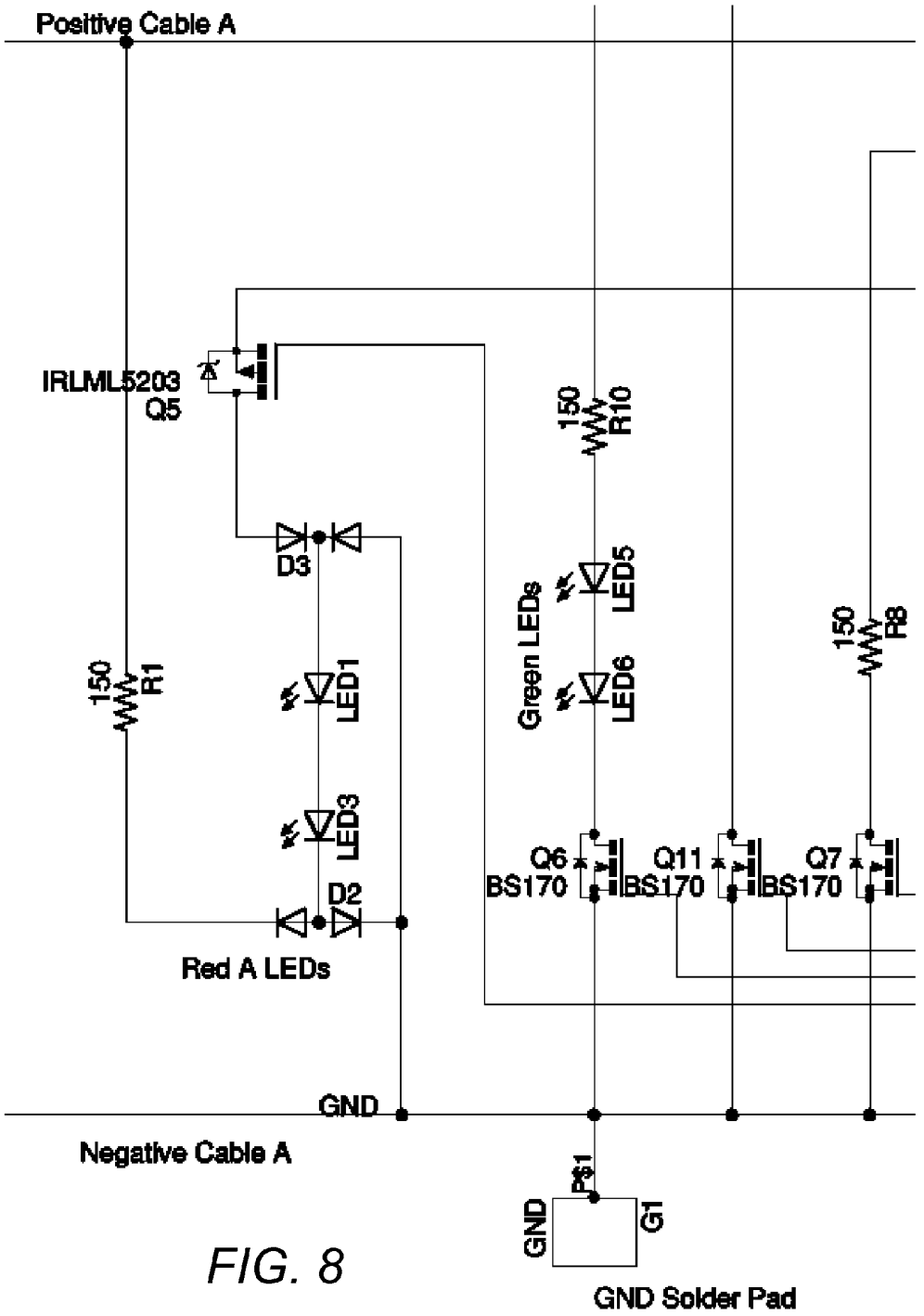

FIG. 8

Chic Electrics, Exhibit 1008
Shenzhen Chic Electrics v. Pilot

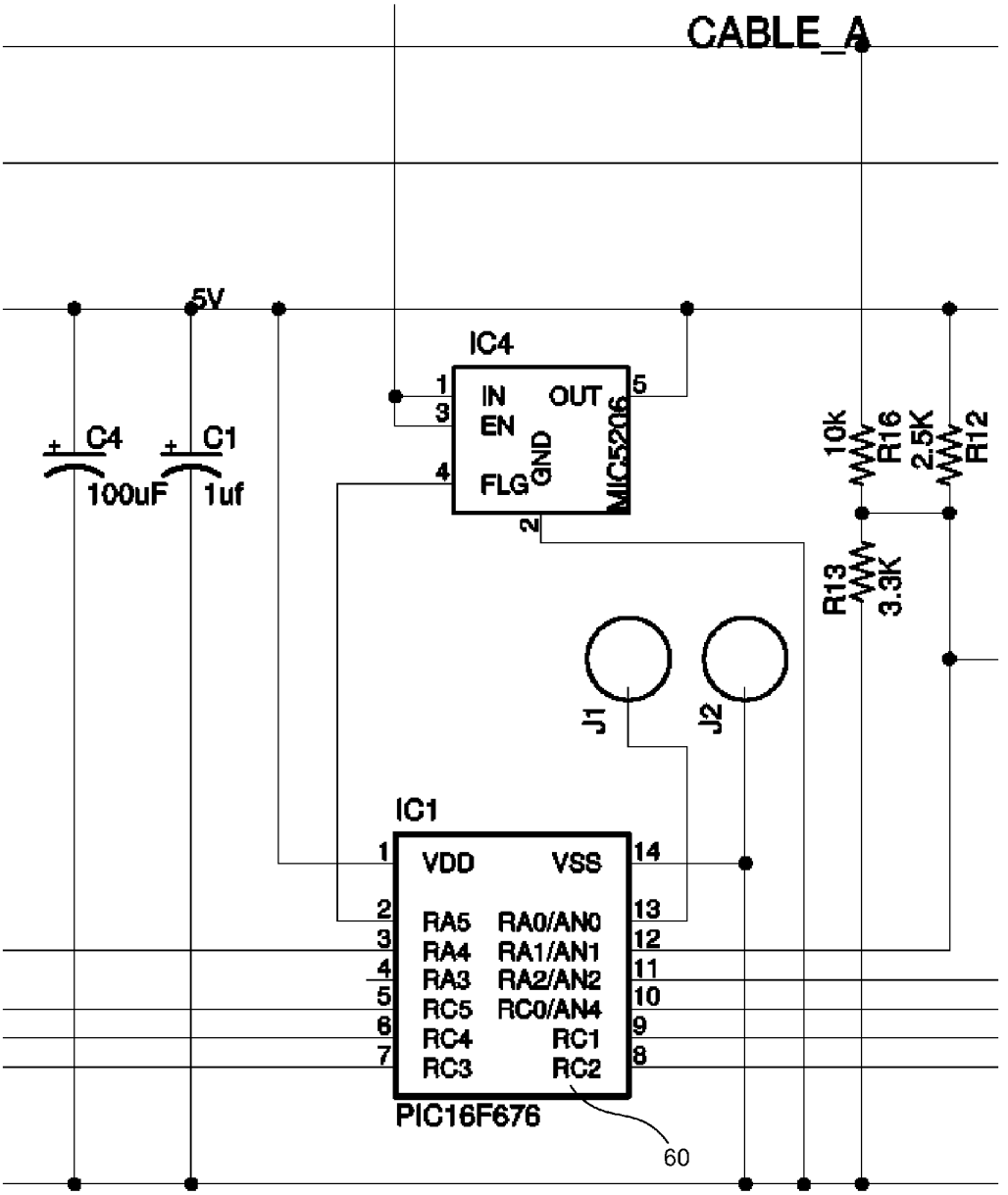

FIG. 9

Chic Electrics, Exhibit 1008
Shenzhen Chic Electrics v. Pilot

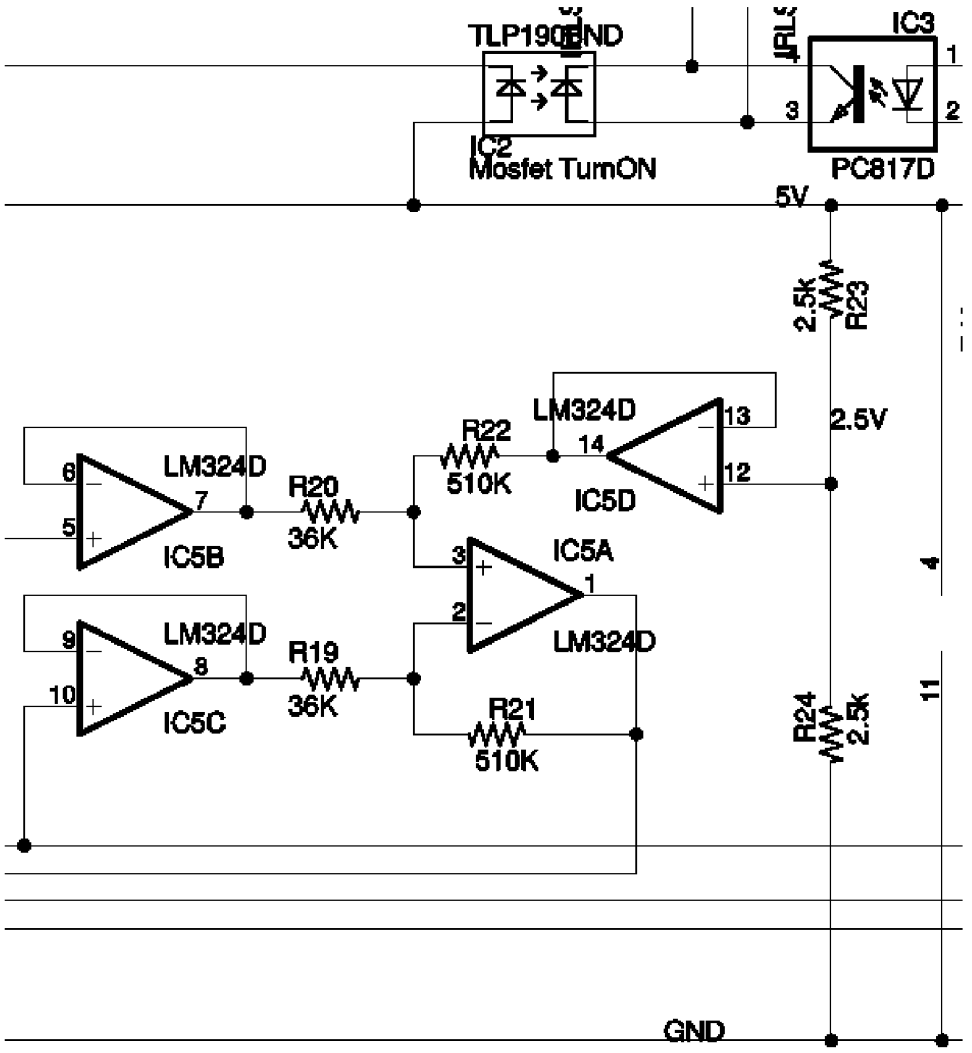

FIG. 10

Chic Electrics, Exhibit 1008
Shenzhen Chic Electrics v. Pilot

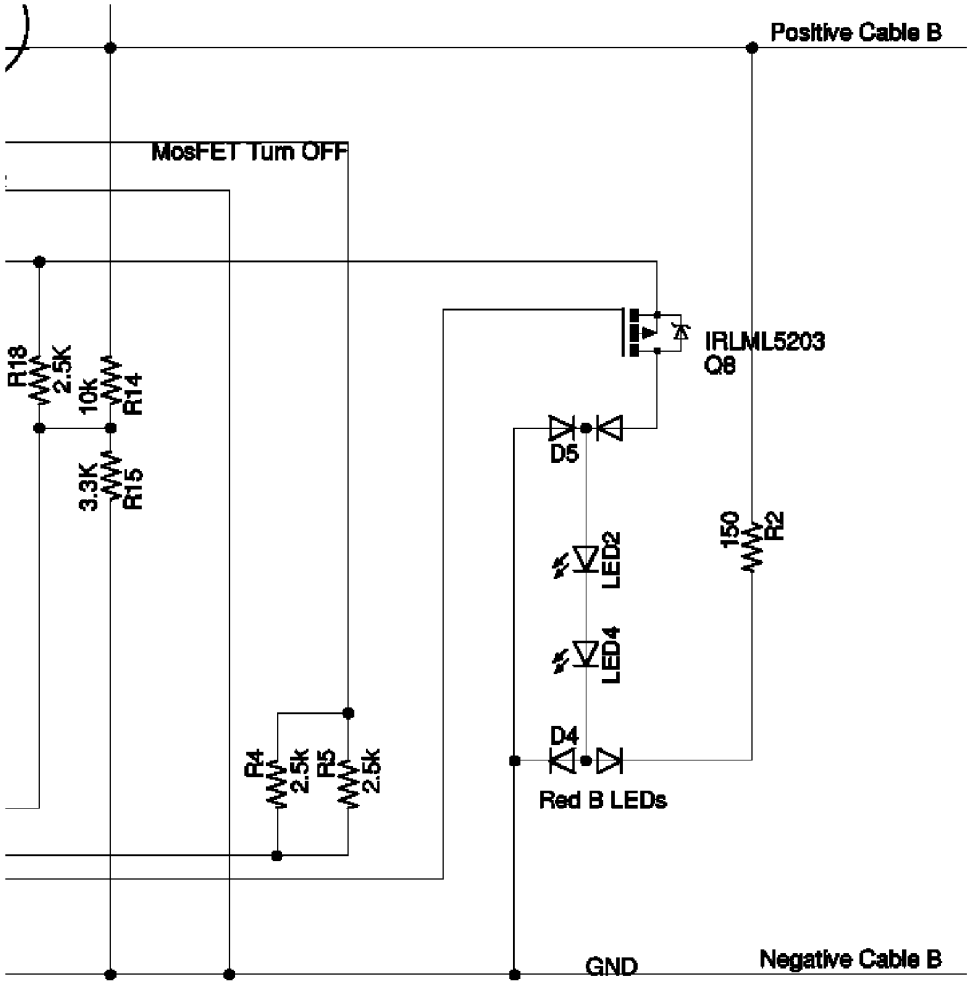

FIG. 11

Chic Electrics, Exhibit 1008
Shenzhen Chic Electrics v. Pilot

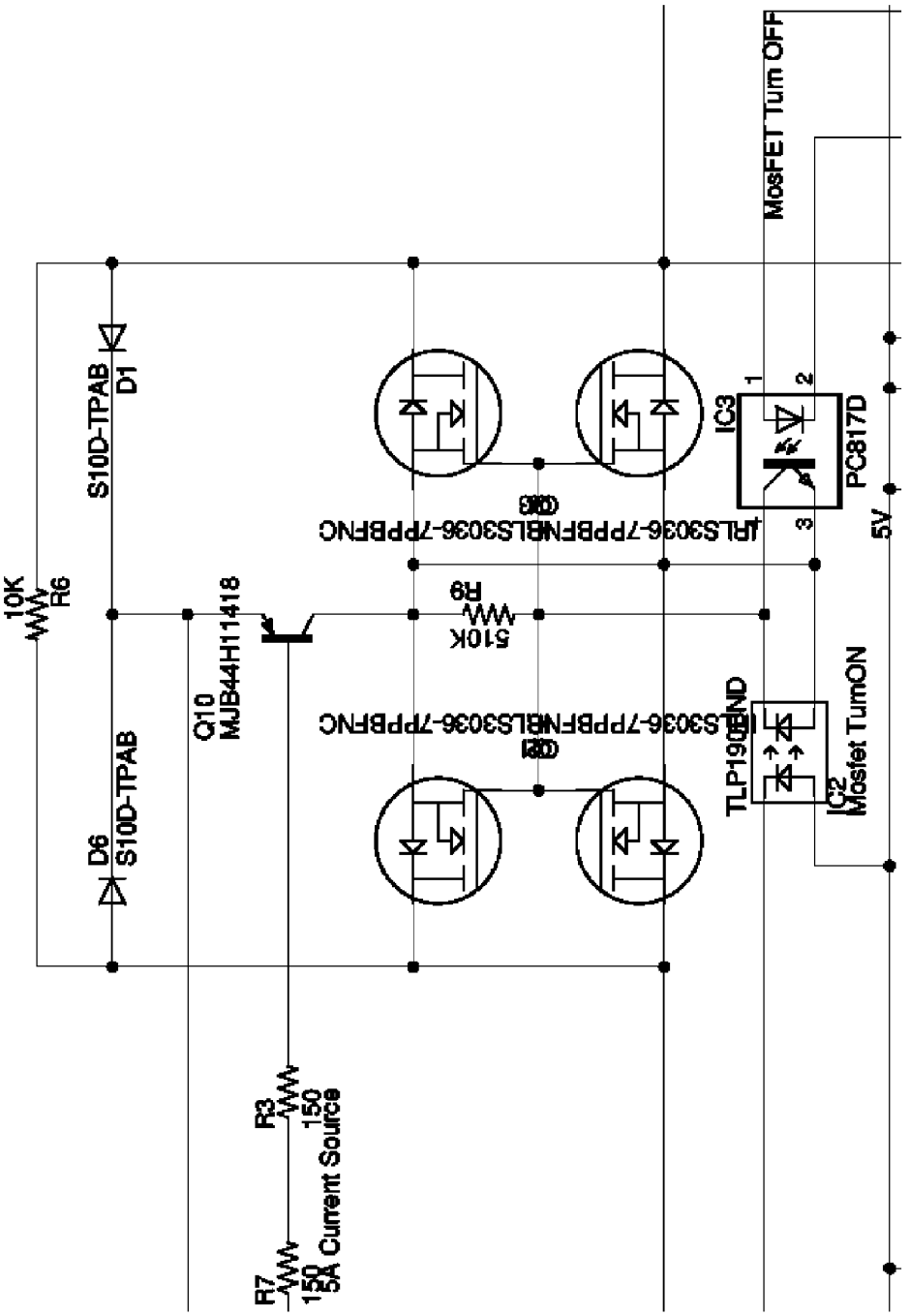

FIG. 12

Chic Electrics, Exhibit 1008
Shenzhen Chic Electrics v. Pilot

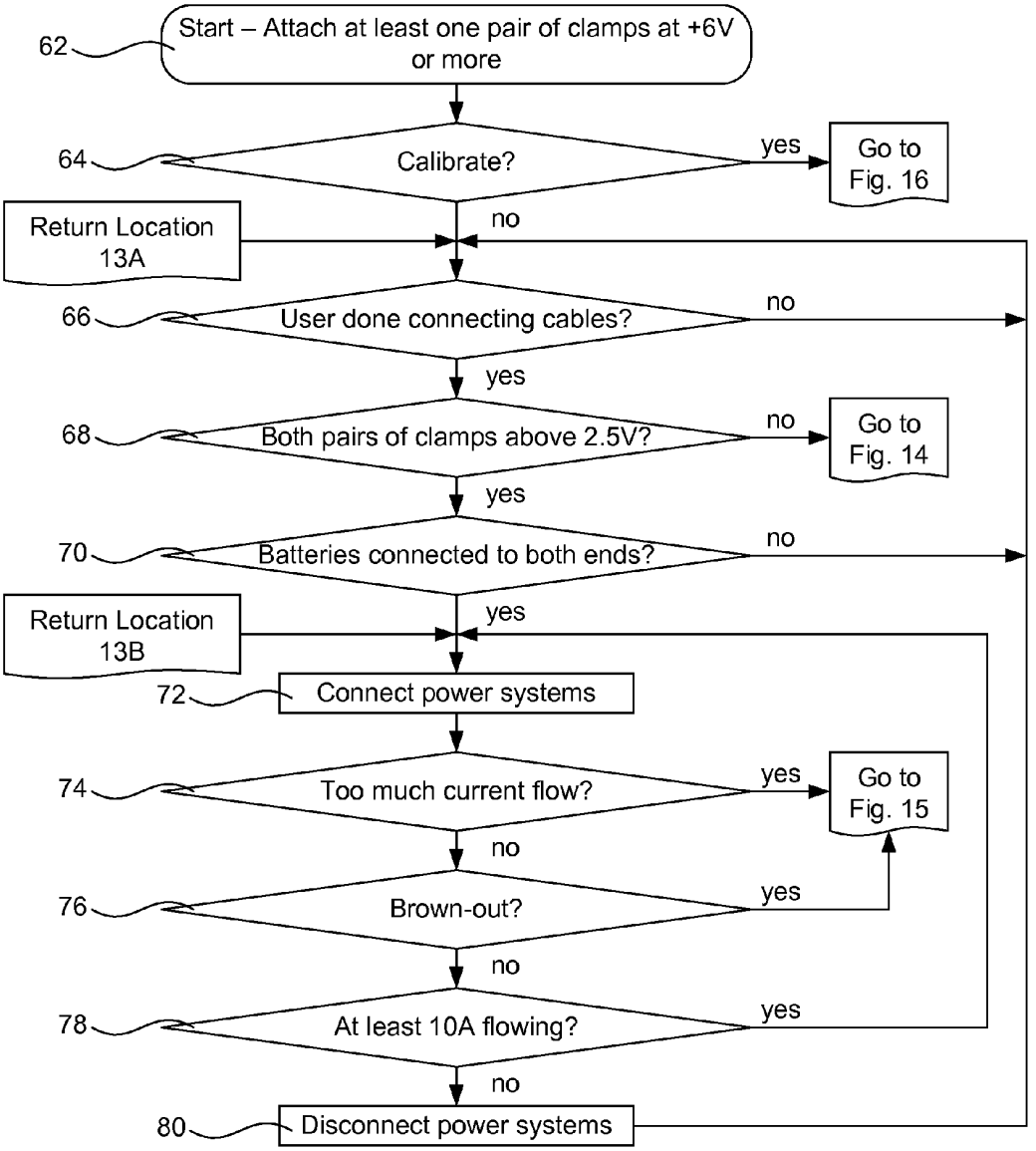

FIG. 13

Chic Electrics, Exhibit 1008
Shenzhen Chic Electrics v. Pilot

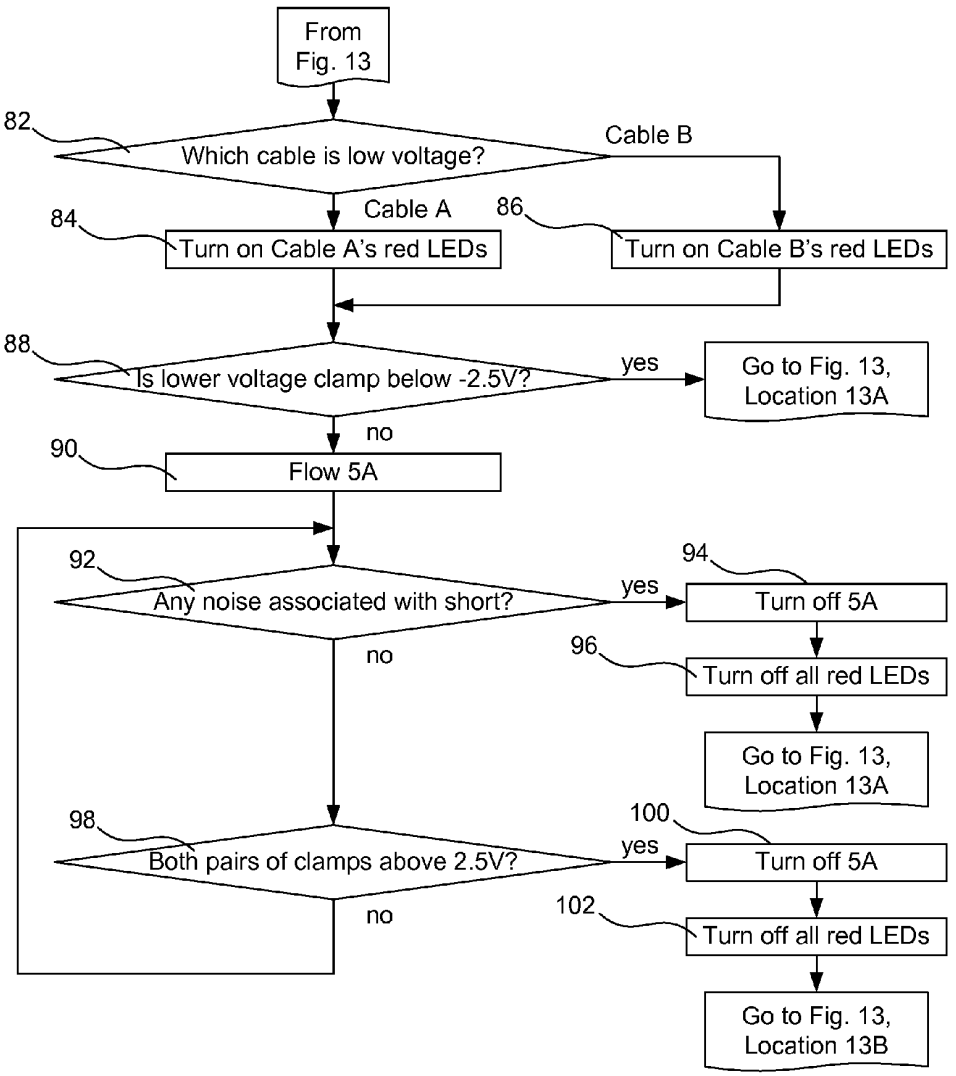

FIG. 14

Chic Electrics, Exhibit 1008
Shenzhen Chic Electrics v. Pilot

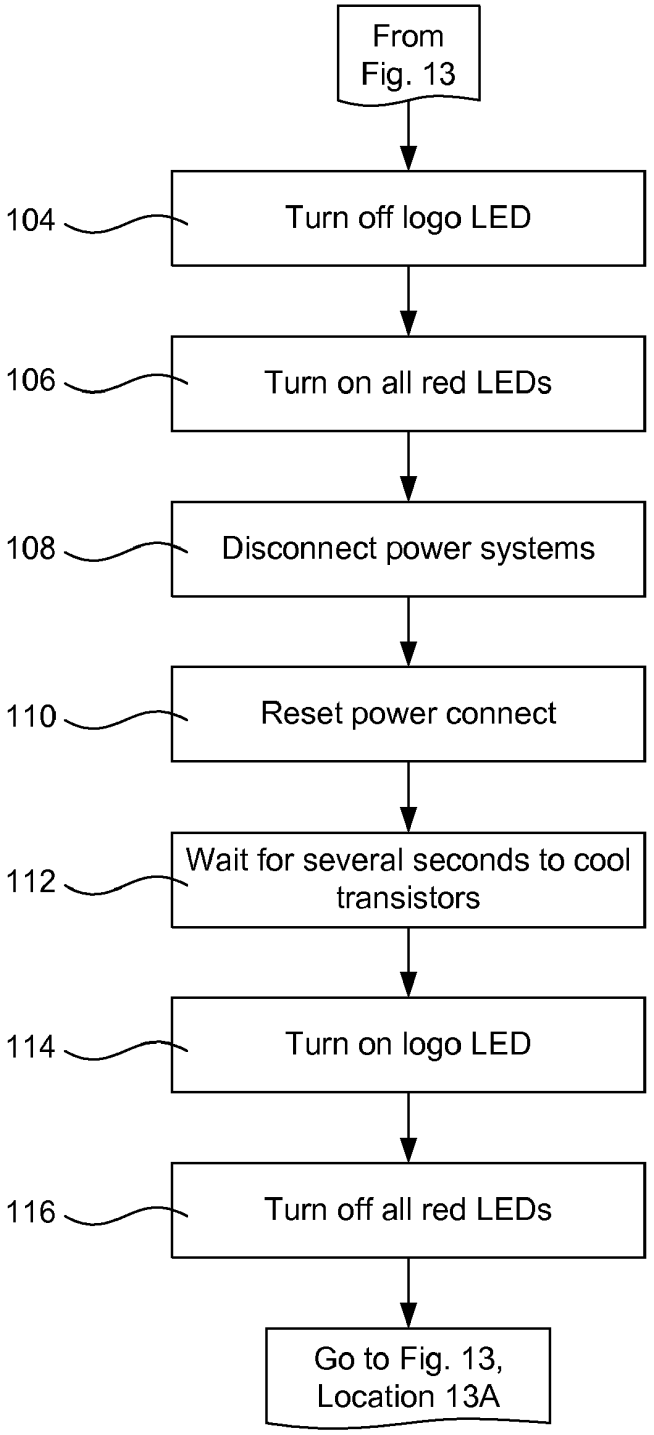

FIG. 15

Chic Electrics, Exhibit 1008
Shenzhen Chic Electrics v. Pilot

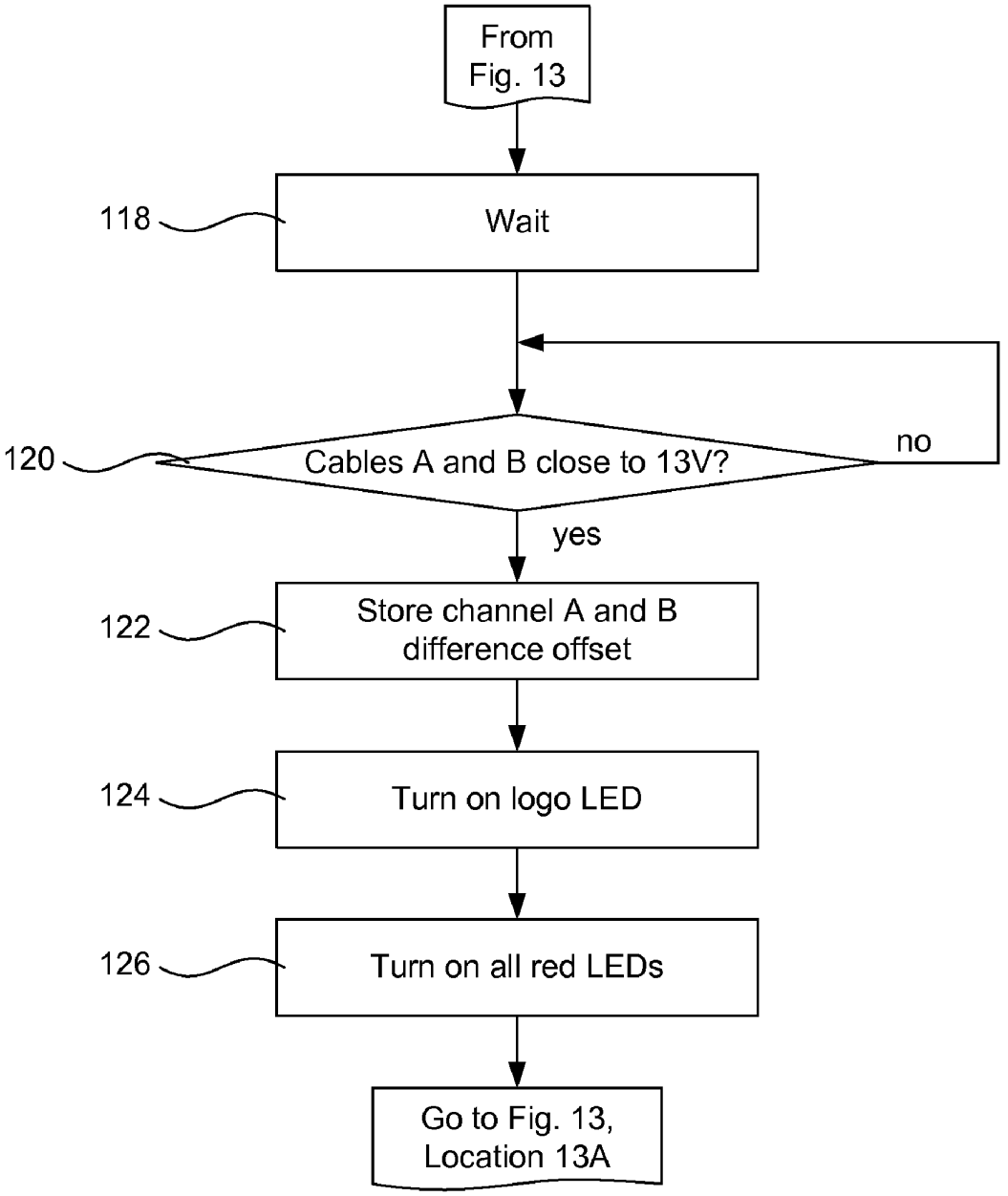

FIG. 16

Chic Electrics, Exhibit 1008
Shenzhen Chic Electrics v. Pilot

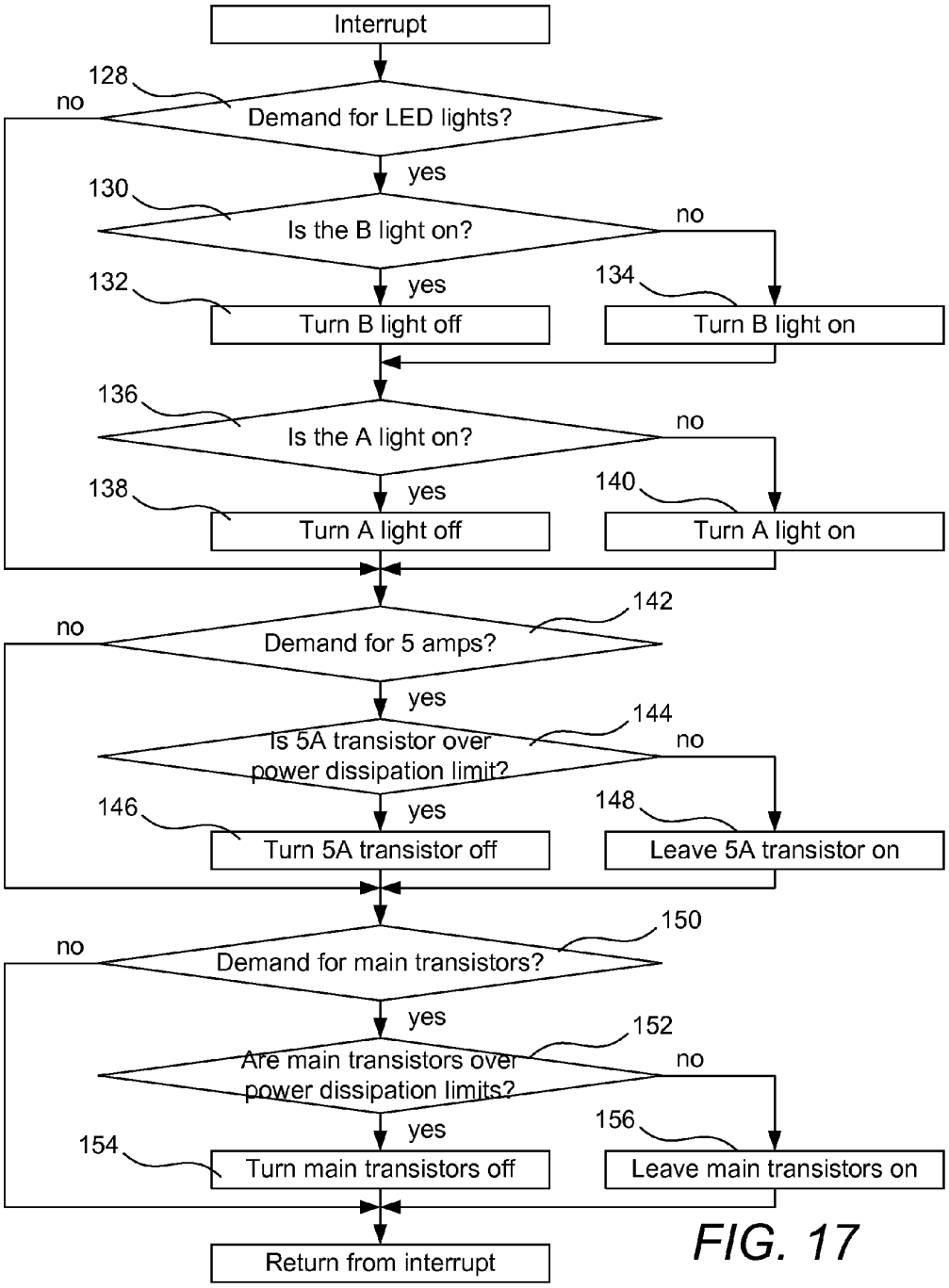

FIG. 17

Chic Electrics, Exhibit 1008
Shenzhen Chic Electrics v. Pilot

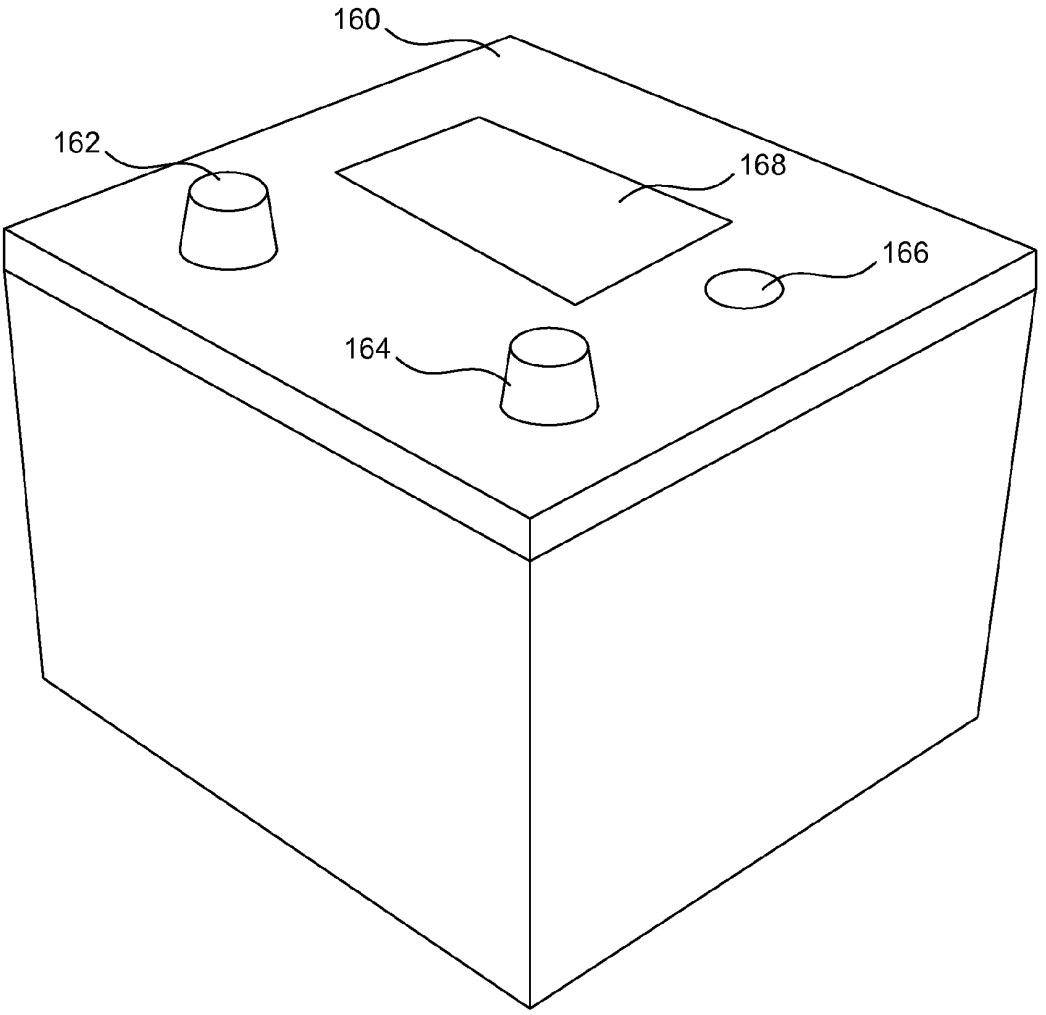

FIG. 18

Chic Electrics, Exhibit 1008
Shenzhen Chic Electrics v. Pilot

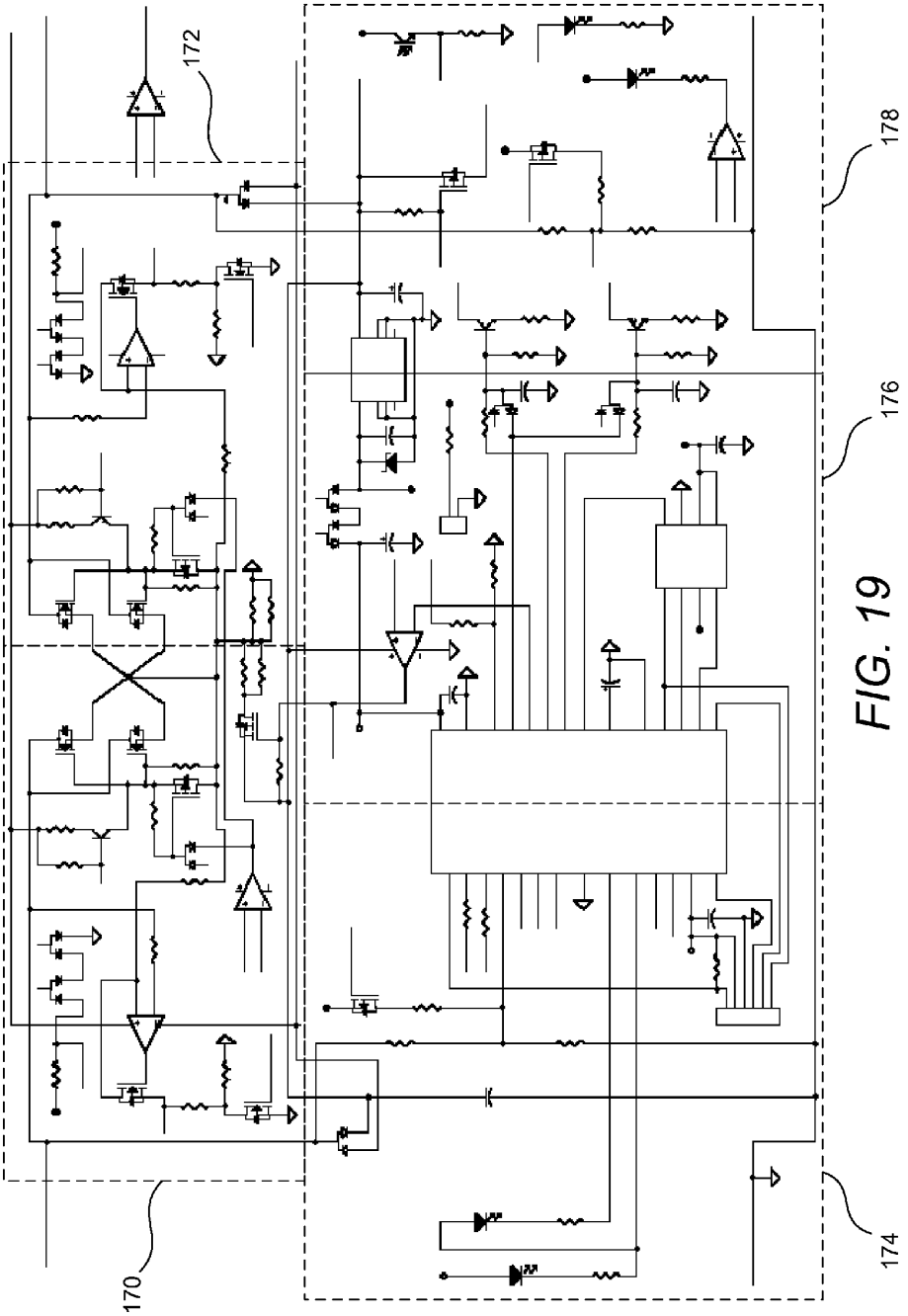

FIG. 19

Chic Electrics, Exhibit 1008
Shenzhen Chic Electrics v. Pilot

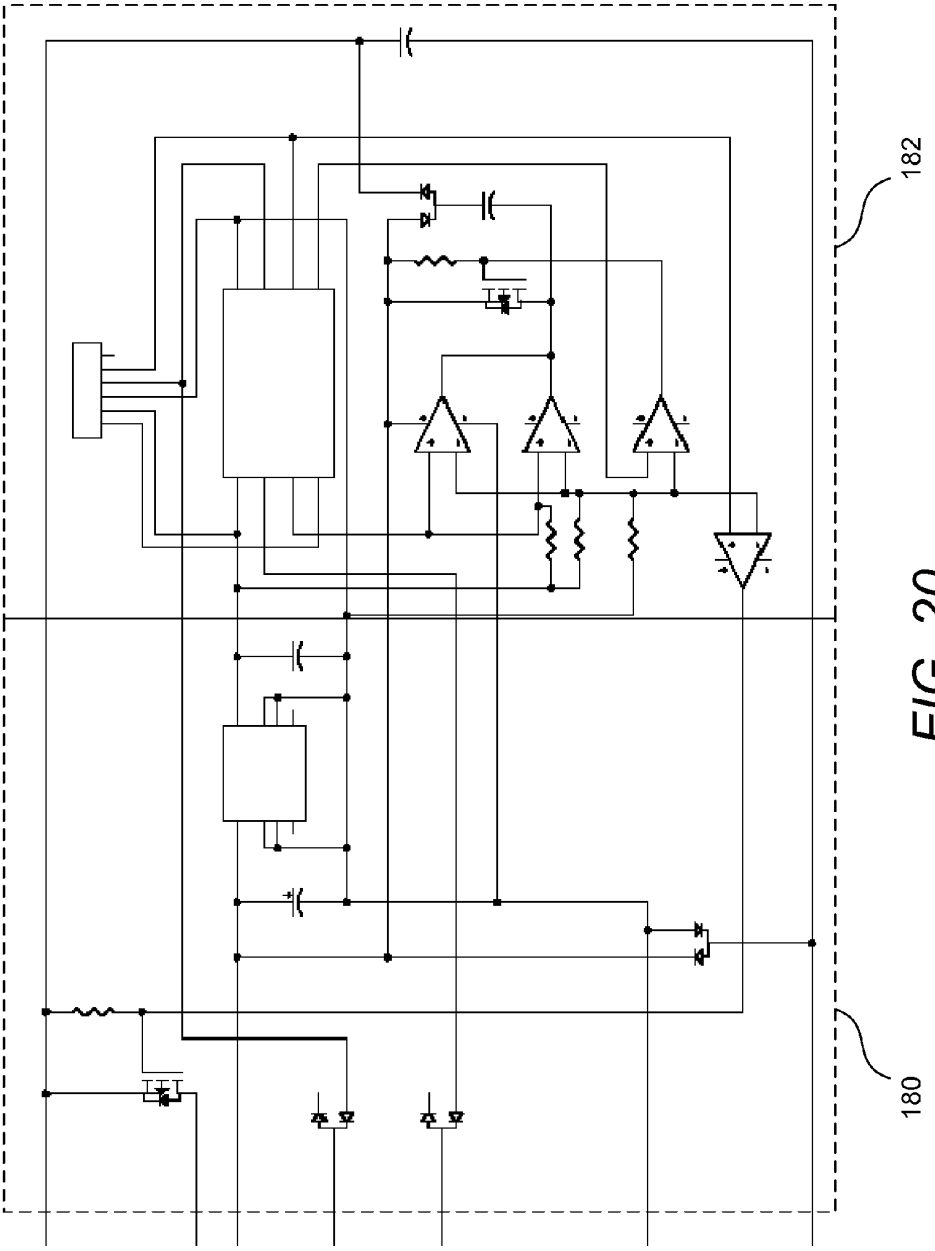

FIG. 20

Chic Electrics, Exhibit 1008
Shenzhen Chic Electrics v. Pilot

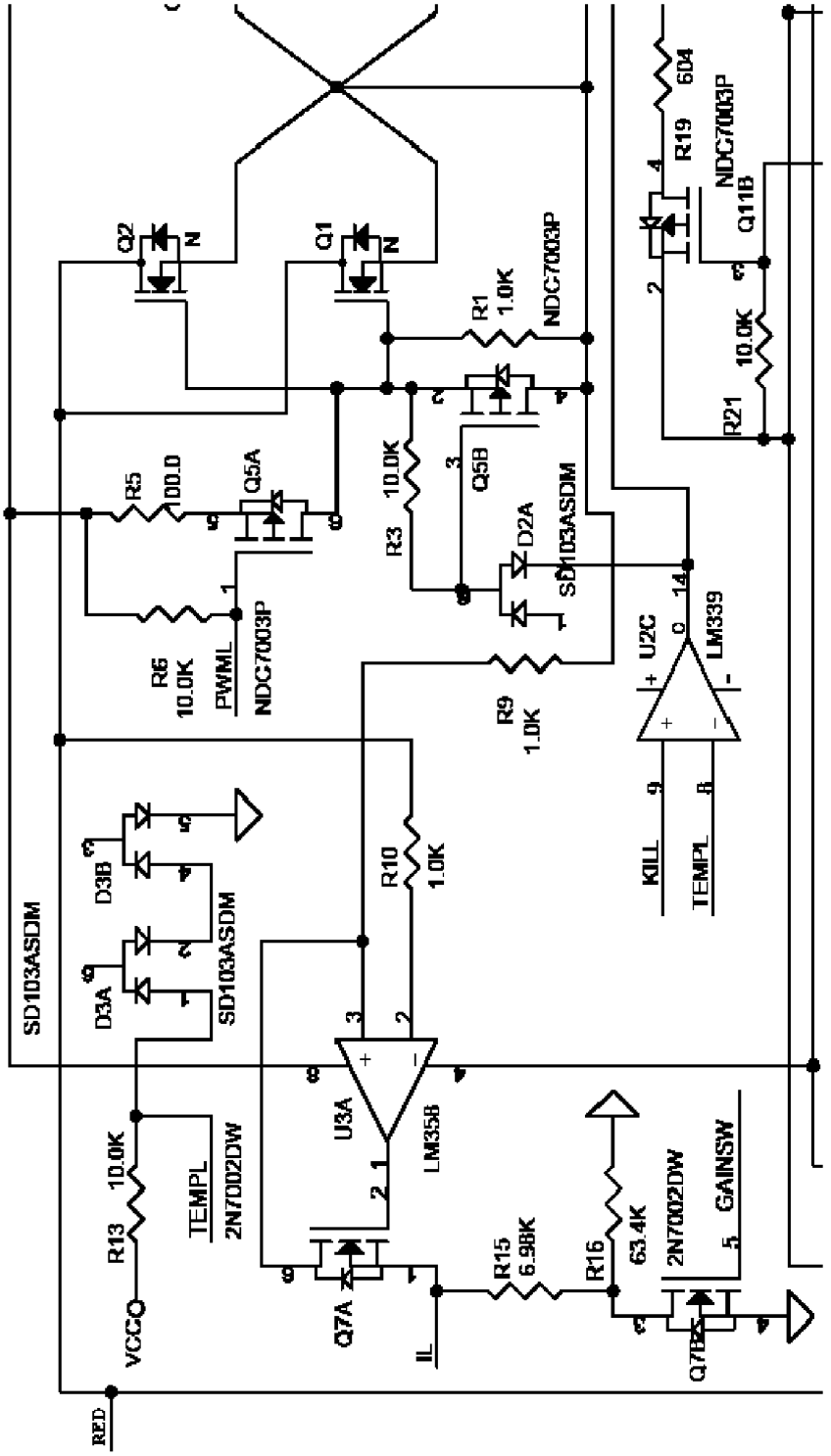

FIG. 21

Chic Electrics, Exhibit 1008
Shenzhen Chic Electrics v. Pilot

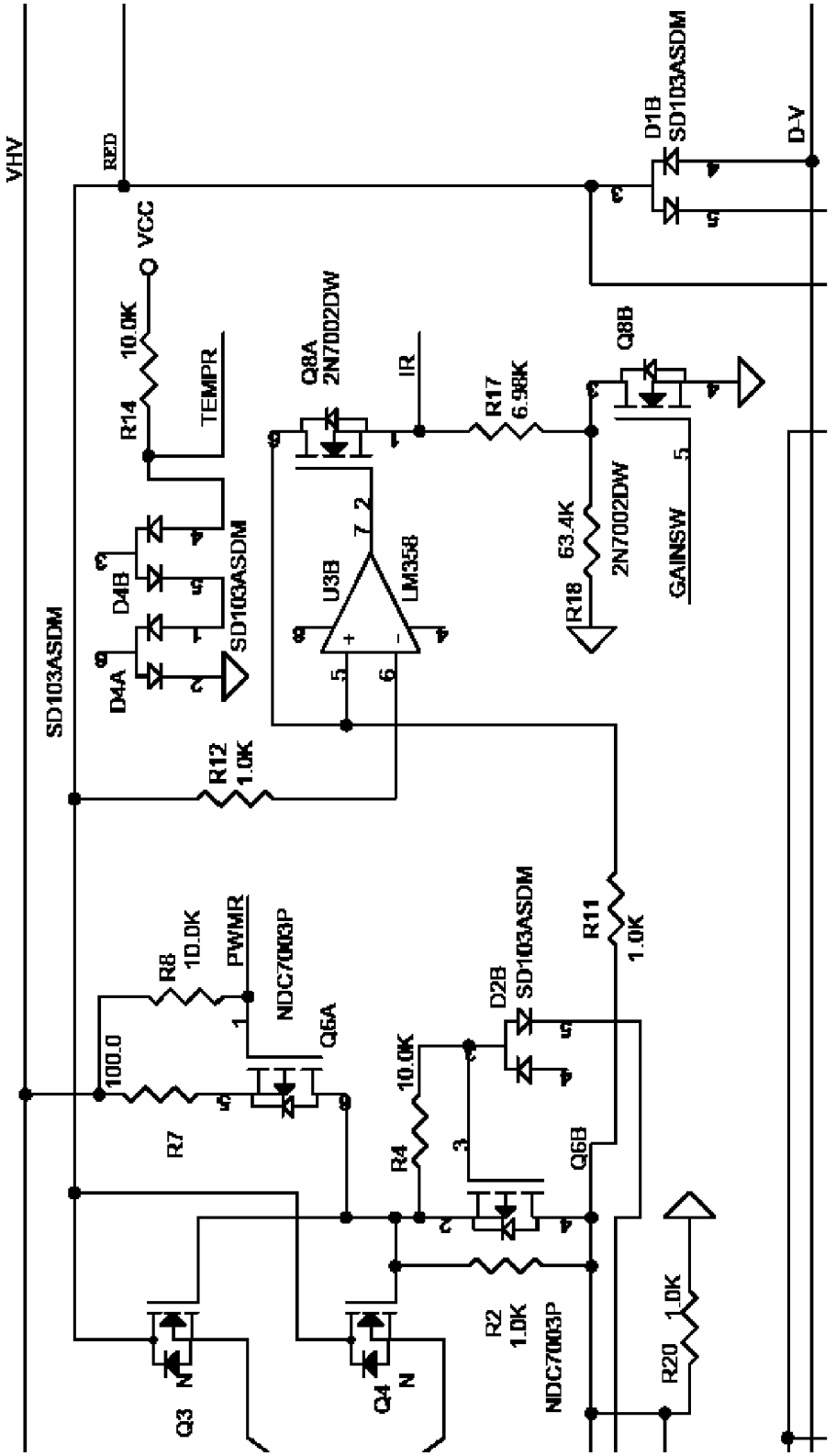

FIG. 22

Chic Electrics, Exhibit 1008
Shenzhen Chic Electrics v. Pilot

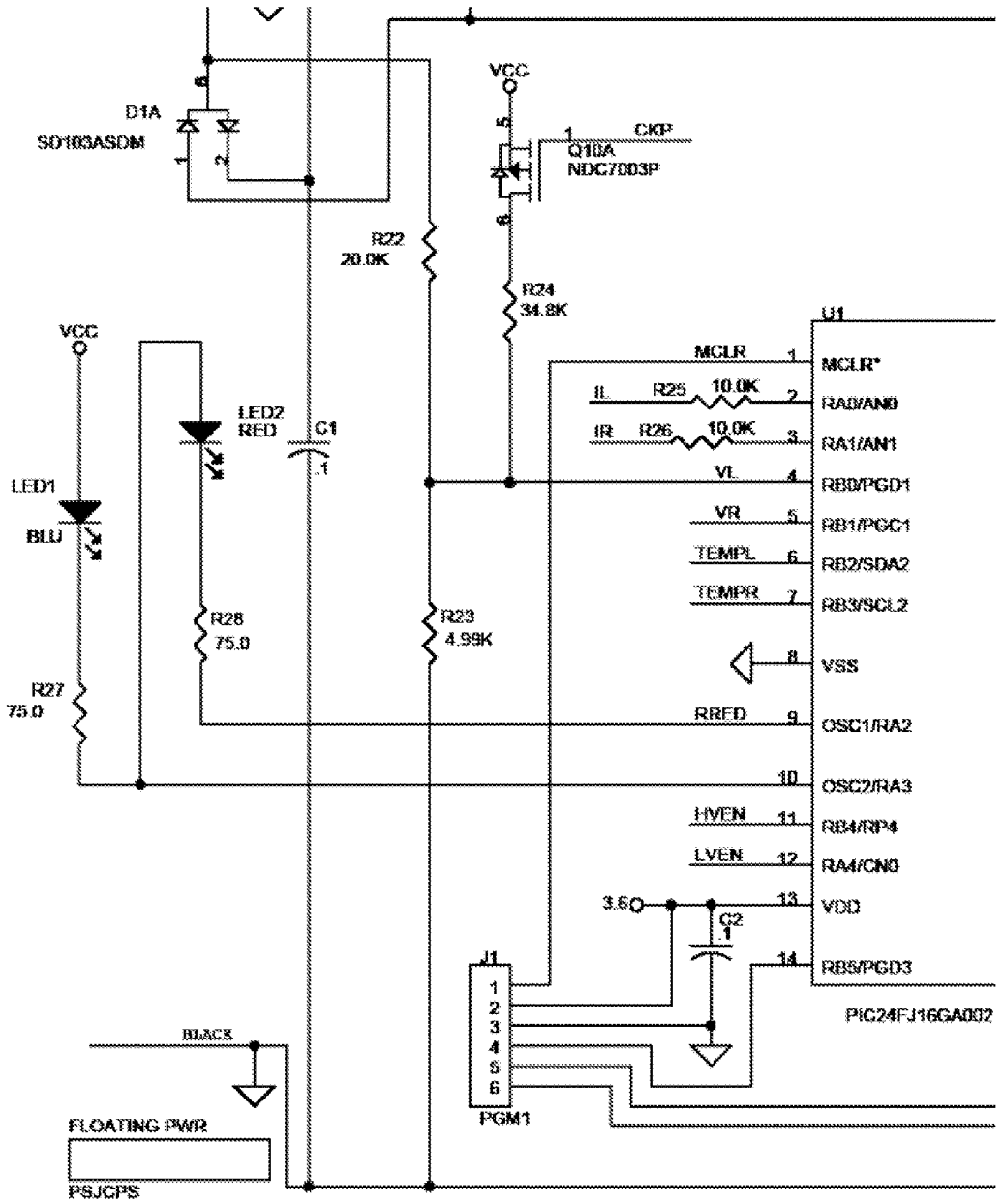

FIG. 23

Chic Electrics, Exhibit 1008
Shenzhen Chic Electrics v. Pilot

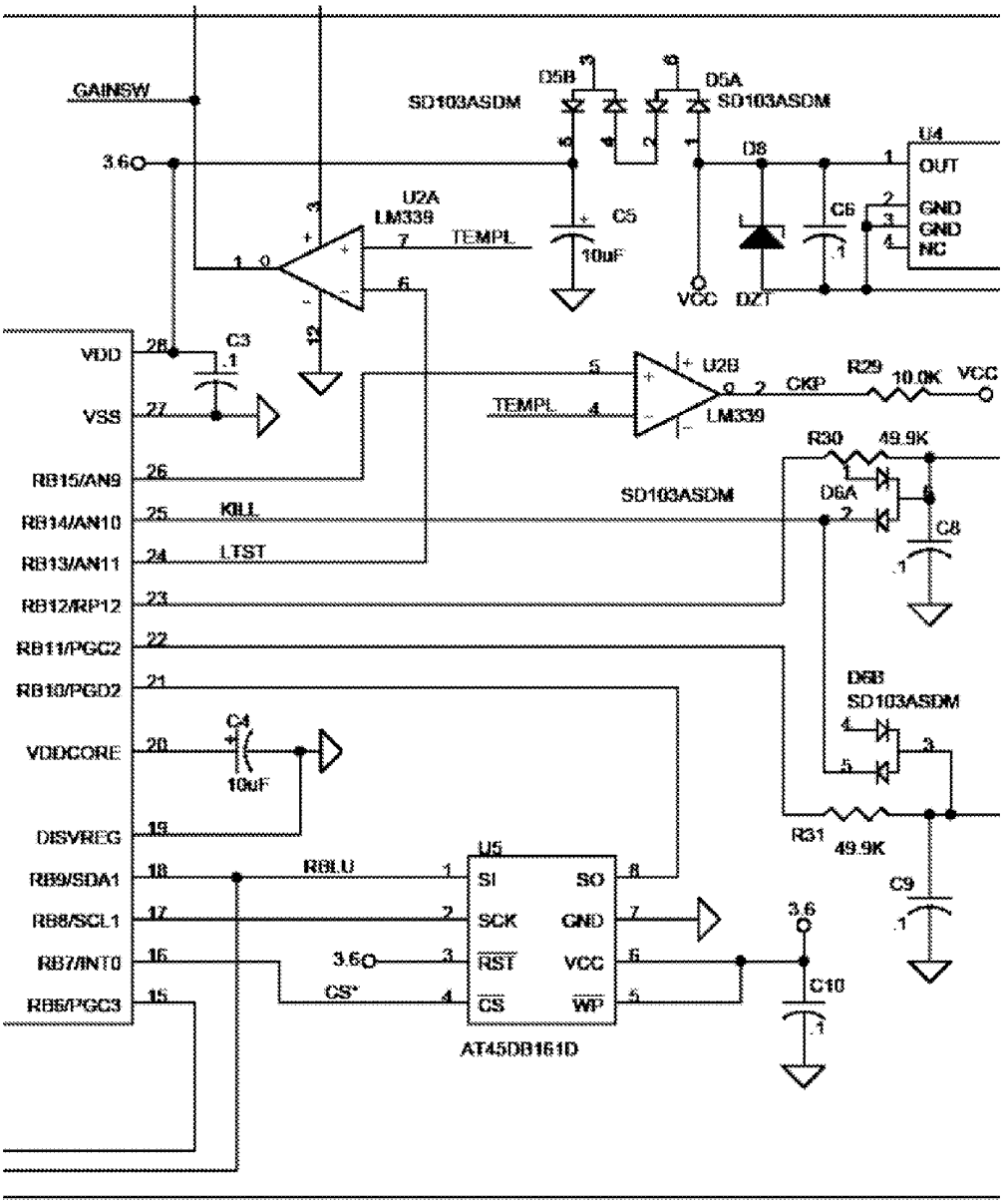

FIG. 24

Chic Electrics, Exhibit 1008
Shenzhen Chic Electrics v. Pilot

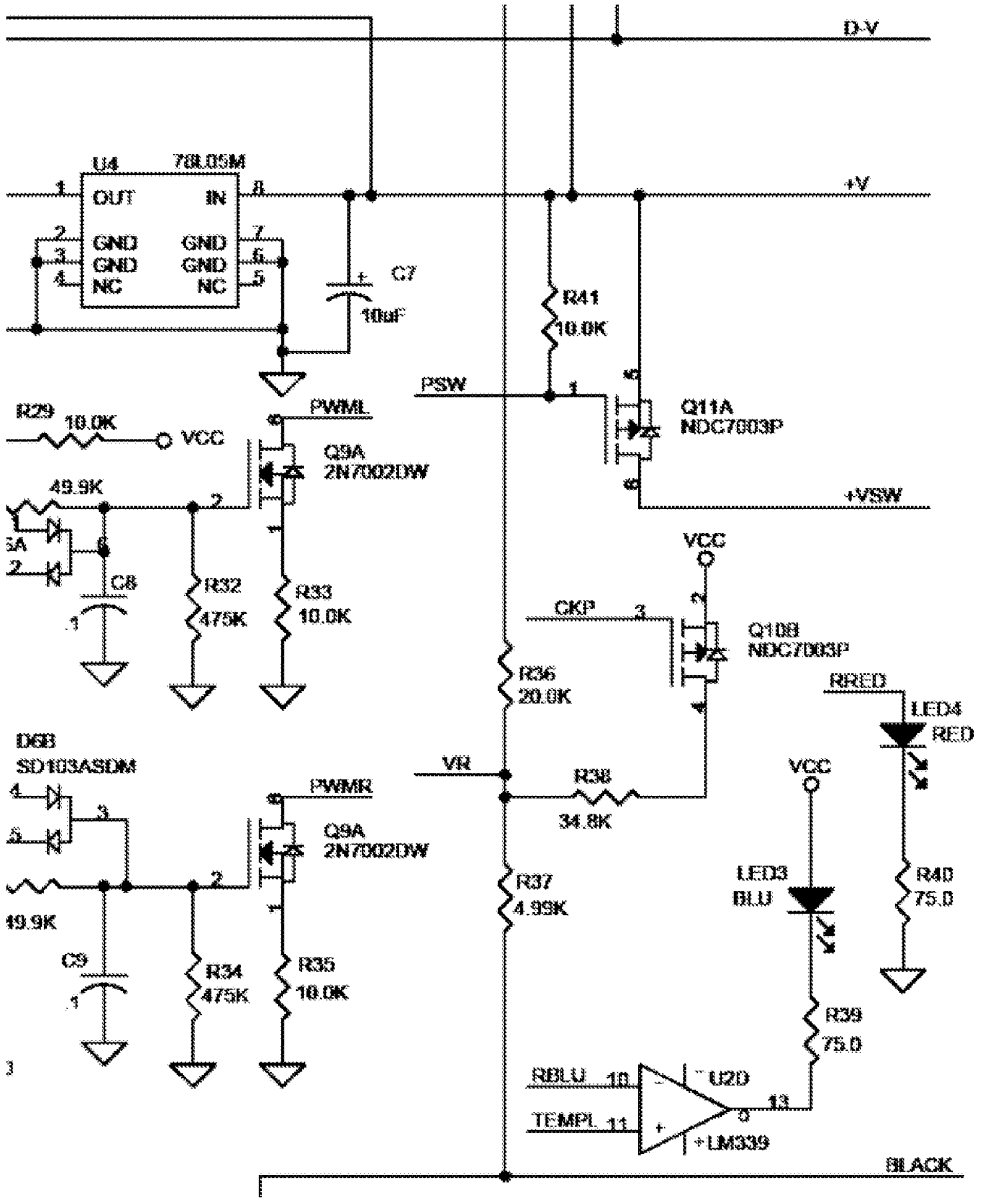

FIG. 25

Chic Electrics, Exhibit 1008
Shenzhen Chic Electrics v. Pilot

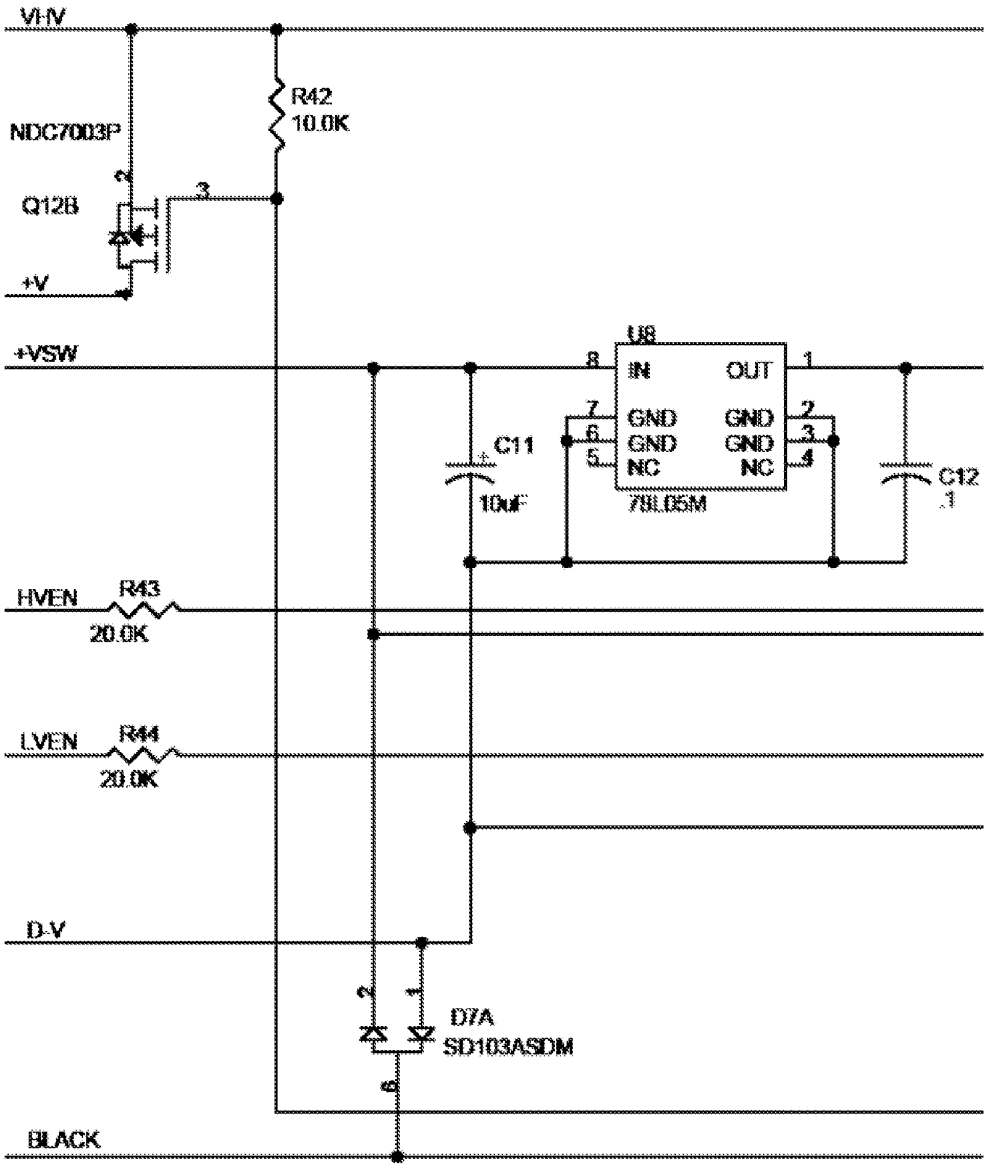

FIG. 26

Chic Electrics, Exhibit 1008
Shenzhen Chic Electrics v. Pilot

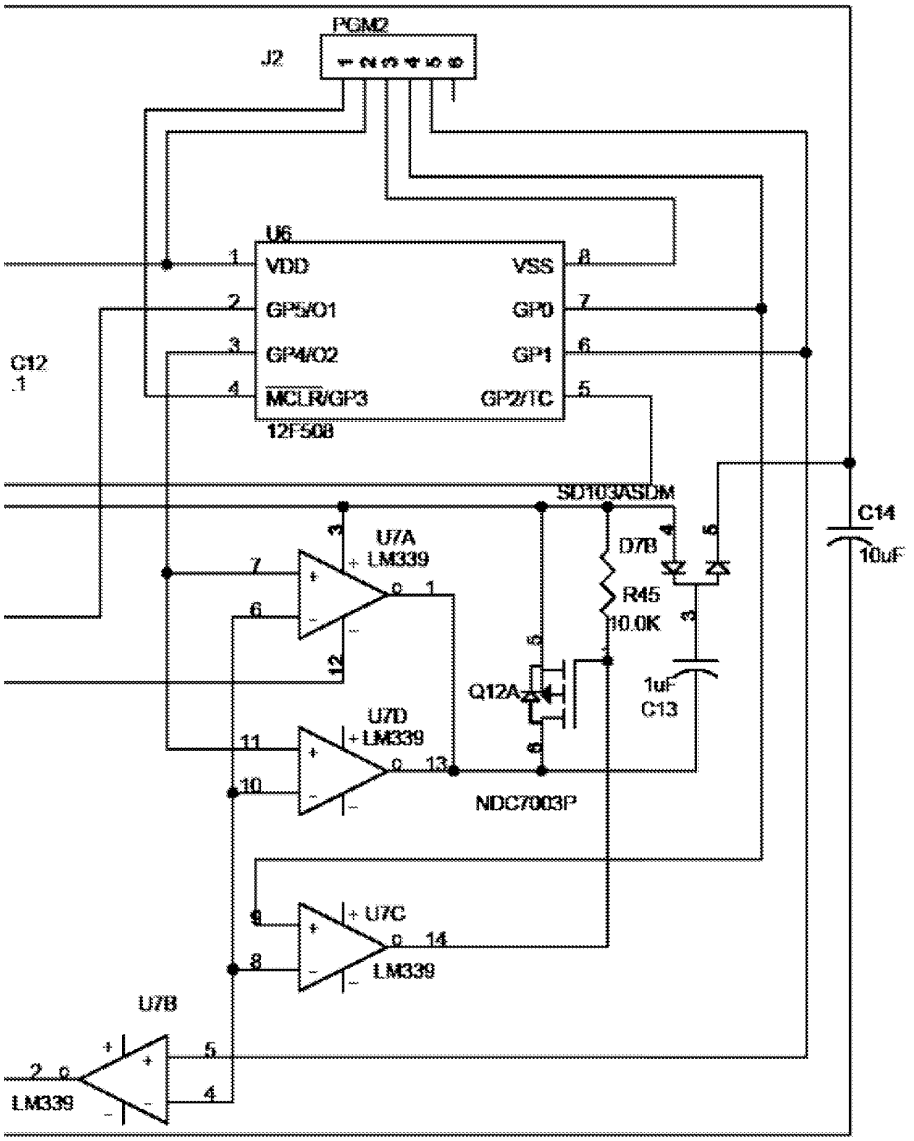

FIG. 27

Chic Electrics, Exhibit 1008
Shenzhen Chic Electrics v. Pilot

LOW-VOLTAGE CONNECTION WITH SAFETY CIRCUIT AND METHOD FOR DETERMINING PROPER CONNECTION POLARITY

CROSS-REFERENCE TO RELATED APPLICATIONS

[0001] This application is a continuation-in-part of prior application Ser. No. 12/559,357, filed Sep. 14, 2009, which claims the benefit of U.S. Provisional Application No. 61/175,696, filed May 5, 2009, and U.S. Provisional Application No. 61/118,511, filed Nov. 28, 2008, which applications are incorporated herein by reference in their entireties for all purposes.

BACKGROUND OF THE INVENTION

[0002] 1. Field of the Invention

[0003] The present invention relates to batteries and, more particularly, to batteries providing certain safety features.

[0004] 2. Background and Related Art

[0005] Cables such as jumper cables are commonly used to connect two low-voltage (e.g. battery-powered) systems temporarily. However, the use of such cables can result in personal injury and equipment damage. For example, one instance where equipment damage or personal injury occurs is in the case of jump starting a car with a "dead" (i.e. partially- or totally-discharged) battery using a car with a good battery. During connection of jumper cables to jump start the car with the discharged battery, a spark may be created, and if the spark is in the vicinity of hydrogen gas commonly generated by car batteries, the spark can ignite the hydrogen gas to explosive effect. Additionally, as the connection is made between vehicles, inductive voltage spikes may be formed, and the voltage spikes can damage sensitive automotive electronics, including expensive computer-controlled engine control components and the like. Additionally, connecting a jumper cable set backward (i.e. with polarity of one of the battery connections reversed) can also cause injury or damage.

[0006] Similar problems can be encountered when replacing a battery in a battery-containing low-voltage system. For example, a battery that is improperly connected (e.g. a battery connected with reverse polarity, a battery connected to a system having an intermittent or long-term short circuit, etc.) can cause equipment damage or injury.

BRIEF SUMMARY OF THE INVENTION

[0007] Implementation of the invention provides a safety circuit for use in low-voltage systems that improves safety of and provides additional features to low-voltage connections. When incorporated into a battery, the circuit leaves the battery disconnected from the low-voltage system until it determines that it is safe to make a connection. When the safety circuit determines that no unsafe conditions exist and that it is safe to connect the battery, the safety circuit may connect the battery by way of a "soft start" that provides a connection over a period of time that reduces or prevents inductive voltage spikes on the low-voltage system. A method is used for detection of proper polarity of the connections between the battery and the low-voltage system. When incorporated into a jumper cable, the safety circuit provides communication abilities, can provide test abilities, and improves connection safety and functionality, such as allowing transfer of power between low-voltage systems having different voltages.

[0008] Implementation of the invention provides a battery-integrated connection between a battery and a low-voltage system that includes a safety circuit. The safety circuit leaves the low-voltage system disconnected until it determines that it is safe to make a connection. If the safety circuit detects an unsafe condition, it responds to the unsafe condition in one or more of several fashions. In some instances, the safety circuit can internally reverse connection polarity to correct for incorrect connections to the low-voltage system of a reversed-polarity type. In some instances, the safety circuit provides an audible and/or visible alarm identifying a potential problem. In some instances, the safety circuit refuses to make a connection to the low-voltage system while an unsafe condition exists.

[0009] When the safety circuit determines that no unsafe conditions exist and that it is safe to connect or power the low-voltage system, the safety circuit may connect the system by way of a "soft start." The soft start provides a connection between the two systems that is not instantaneous, but is instead provided over a period of time, such as approximately a millisecond to tens of milliseconds, that reduces or prevents inductive voltage spikes on the low-voltage system. The soft start procedure reduces and/or prevents damage to sensitive low-voltage electronics forming a part of the low-voltage system.

[0010] Some implementations of the invention utilize one or more high-current transistors as a switch to connect the two low-voltage systems. The one or more transistors are controlled by the safety circuit or control circuit that detects the condition at each end of the connection cable or cables. In other implementations providing automatic correction of attempted reversed-polarity connections, additional components are used to provide additional convenience. While such implementations provide no additional safety benefit over implementations not providing automatic polarity reversal as the connection is not completed when a reversed polarity is detected, the added convenience of not requiring manual polarity correction may justify the added component cost in some instances.

BRIEF DESCRIPTION OF THE SEVERAL VIEWS OF THE DRAWINGS

[0011] The objects and features of the present invention will become more fully apparent from the following description and appended claims, taken in conjunction with the accompanying drawings. Understanding that these drawings depict only typical embodiments of the invention and are, therefore, not to be considered limiting of its scope, the invention will be described and explained with additional specificity and detail through the use of the accompanying drawings in which:

[0012] FIG. **1** shows a perspective view of a jumper cable embodiment;

[0013] FIG. **2** shows a schematic illustrating concepts in accordance with embodiments of the invention;

[0014] FIG. **3** shows a perspective view of a representative circuit board in accordance with embodiments of the invention;

[0015] FIG. **4** shows a generalized circuit schematic representative of a discharged car battery in a car;

[0016] FIG. **5** shows a representative schematic showing one method for testing a battery for proper polarity;

Chic Electrics, Exhibit 1008
Shenzhen Chic Electrics v. Pilot

[0017] FIG. **6** shows a representative schematic showing another method for testing a battery for proper polarity;

[0018] FIG. **7** shows a representative circuit diagram for use in embodiments of the invention;

[0019] FIGS. **8-12** show expanded views of portions of the circuit diagram shown in FIG. **7**;

[0020] FIGS. **9-17** show flow charts illustrating processes that may be implemented in the circuit of FIGS. **7-12**;

[0021] FIG. **18** shows one example of a battery incorporating protection circuitry;

[0022] FIGS. **19-20** show overview views of a representative circuit diagram for use in embodiments of the invention; and

[0023] FIGS. **21-27** show expanded views of portions of the representative circuit of FIGS. **19-20** with representative component values added for clarity.

DETAILED DESCRIPTION OF THE INVENTION

[0024] A description of embodiments of the present invention will now be given with reference to the Figures. It is expected that the present invention may take many other forms and shapes, hence the following disclosure is intended to be illustrative and not limiting, and the scope of the invention should be determined by reference to the appended claims.

[0025] Embodiments of the invention provide a safety circuit for use in low-voltage systems that improves safety of and provides additional features to low-voltage connections. When incorporated into a battery, the circuit leaves the battery disconnected from the low-voltage system until it determines that it is safe to make a connection. When the safety circuit determines that no unsafe conditions exist and that it is safe to connect the battery, the safety circuit may connect the battery by way of a "soft start" that provides a connection over a period of time that reduces or prevents inductive voltage spikes on the low-voltage system. A method is used for detection of proper polarity of the connections between the battery and the low-voltage system. When incorporated into a jumper cable, the safety circuit provides communication abilities, can provide test abilities, and improves connection safety and functionality, such as allowing transfer of power between low-voltage systems having different voltages.

[0026] Embodiments of the invention provide a battery-integrated connection between a battery and a low-voltage system that includes a safety circuit. The safety circuit leaves the low-voltage system disconnected until it determines that it is safe to make a connection. If the safety circuit detects an unsafe condition, it responds to the unsafe condition in one or more of several fashions. In some instances, the safety circuit can internally reverse connection polarity to correct for incorrect connections to the low-voltage system of a reversed-polarity type. In some instances, the safety circuit provides an audible and/or visible alarm identifying a potential problem. In some instances, the safety circuit refuses to make a connection to the low-voltage system while an unsafe condition exists.

[0027] When the safety circuit determines that no unsafe conditions exist and that it is safe to connect or power the low-voltage system, the safety circuit may connect the system by way of a "soft start." The soft start provides a connection between the two systems that is not instantaneous, but is instead provided over a period of time, such as approximately a millisecond to tens of milliseconds, that reduces or prevents inductive voltage spikes on the low-voltage system. The soft start procedure reduces and/or prevents damage to sensitive low-voltage electronics forming a part of the low-voltage system.

[0028] Some embodiments of the invention utilize one or more high-current transistors as a switch to connect the two low-voltage systems. The one or more transistors are controlled by the safety circuit or control circuit that detects the condition at each end of the connection cable or cables. In other embodiments providing automatic correction of attempted reversed-polarity connections, additional components are used to provide additional convenience. While such embodiments provide no additional safety benefit over embodiments not providing automatic polarity reversal as the connection is not completed when a reversed polarity is detected, the added convenience of not requiring manual polarity correction may justify the added component cost in some instances.

[0029] An embodiment of the invention includes a battery-integrated safety circuit for use in establishing that a low-voltage system is safely and properly connected to a battery. The safety circuit includes a pair of output terminals, a detection circuit operatively connected to the output terminals and configured to detect whether the output terminals are properly connected to a low-voltage system with a correct polarity, and a power-controlling circuit configured to provide electrical power to the output terminals only when a proper connection of correct polarity has been detected.

[0030] In some embodiments, the power-controlling circuit provides electrical power to the output terminals using a soft start procedure that reduces inductive voltage spikes. As one example, the power-controlling circuit may control one or more power transistors that are used to provide electrical power to the output terminals using the soft start procedure. The soft start procedure provides electrical power to the output terminal over a period of approximately a millisecond to tens of milliseconds.

[0031] A battery-integrated safety circuit may also include a polarity test circuit configured to supply a test current to the output terminals and measure a resulting voltage to determine a proper polarity of a low-voltage system connected to the output terminals. The polarity test circuit may be configured to supply test currents of different directions and to compare the voltages caused by the test currents.

[0032] Another embodiment of the invention provides a battery containing a battery-integrated safety circuit, the battery having a positive terminal, a negative terminal, and a safety circuit operatively connected to the positive terminal and the negative terminal and configured to supply power through the positive and negative terminals only when a connection between the terminals and a low-voltage system has been properly made with a correct polarity. The battery may prevent the supply of power to the positive and negative terminals when a short circuit exists between the positive and negative terminals. The safety circuit may include a polarity test circuit configured to supply a test current to the terminals and measure a resulting voltage to determine a proper polarity of a low-voltage system connected to the battery. The safety circuit may also include a detection circuit operatively connected to the terminals and configured to detect whether the terminals are connected to the low-voltage system with the correct polarity, and a power-controlling circuit configured to provide electrical power to the terminals.

[0033] Another embodiment encompasses a battery having an energy storage cell, a pair of output terminals, and a safety

Chic Electrics, Exhibit 1008
Shenzhen Chic Electrics v. Pilot

circuit electrically connected to the energy storage cell. The safety circuit includes a detection circuit operatively connected to the output terminals for detecting whether the output terminals are properly connected to a low-voltage system with a correct polarity of connection, and a power-controlling circuit configured to supply power from the energy storage cell to the output terminals only when a proper connection of correct polarity has been detected.

[0034] Other embodiments of the invention illustrating features of the battery-incorporated safety circuits provide a connecting cable or cables (such as jumper cables) between two low-voltage systems (such as batteries, battery-powered systems, or low-voltage systems incorporating one or more batteries) that includes a safety circuit. The safety circuit leaves the two low-voltage systems disconnected until it determines that it is safe to make a connection. If the safety circuit detects an unsafe condition, it responds to the unsafe condition in one or more of several fashions. In some instances, the safety circuit can internally reverse connection polarity to correct for incorrect connections between low-voltage systems of a reversed-polarity type. In some instances, the safety circuit provides an audible and/or visible alarm identifying a potential problem. In some instances, the safety circuit refuses to make a connection between the two low-voltage systems while an unsafe condition exists.

[0035] When the safety circuit determines that no unsafe conditions exist and that it is safe to connect the two low-voltage systems, the safety circuit may connect the two systems by way of a "soft start." The soft start provides a connection between the two systems that is not instantaneous, but is instead provided over a period of time, such as approximately a millisecond to tens of milliseconds, that reduces or prevents inductive voltage spikes on one or more of the low-voltage systems. The soft start procedure reduces and/or prevents damage to sensitive low-voltage electronics forming a part of one or more of the low-voltage systems.

[0036] Some embodiments of the invention utilize two high-current transistors as a switch to connect the two low-voltage systems. The transistors are controlled by the safety circuit or control circuit that detects the condition at each end of the connection cable or cables. In other embodiments providing automatic correction of attempted reversed-polarity connections, additional components are used to provide additional convenience. While such embodiments provide no additional safety benefit over embodiments not providing automatic polarity reversal as the connection is not completed when a reversed polarity is detected, the added convenience of not requiring manual polarity correction may justify the added component cost in some instances.

[0037] In some embodiments, inexpensive transistors may be used, and the safety circuit or control circuit incorporates features to protect the transistors from potential damage. For example, the safety or control circuit may maintain a thermal model of the transistors and may turn the transistors off and on to protect the transistors against failure. Additionally, the safety or control circuit may monitor for over-current conditions that could destroy the transistors in short periods of time, and could turn off the transistors when such conditions are detected. Such types of protection/detection also may serve to protect components of one or more of the connected low-voltage systems, such as by preventing a starter motor from overheating due to excessive cranking. The safety or control circuit may also monitor for under-voltage conditions on the transistor supply side, to prevent the transistors from entering a non-fully-on state that would cause increased heating and damage to the transistors.

[0038] As it may be desirable to connect two low-voltage systems in an instance where one of the low-voltage systems has a completely-discharged battery incorporated into it, embodiments of the invention may utilize a method for detection of proper polarity of the connections between the low-voltage systems. Such a method is particularly useful when a voltage of one of the low-voltage systems is below a reliable detection threshold. The method may rely on nonlinear behavior of any discharged batteries in the low-voltage system. The polarity of the discharged battery (and thus whether the connected cable is connected correctly) is determined by passing a small amount of current through it and determining whether a corresponding voltage rise is observed (indicating a correct polarity connection) or not (indicating an incorrect polarity connection). In some embodiments, test currents can be applied in opposite polarities and the resulting measured voltages compared to more reliably detect incorrect polarity connection and additional potential problem causes.

[0039] Similar methods may be used to discriminate between a short circuit condition (e.g. clamps touching) and a completely-discharged battery, and at least some embodiments may incorporate such features. Embodiments may also be able to detect whether there are batteries connected to both ends of the circuit by biasing the voltage at each connection to a voltage unlikely to occur in the low-voltage systems, such as 6.5 volts for a typical car battery system. If the voltage then varies from this value by a small amount in either direction, a battery is determined to be connected.

[0040] FIG. **1** provides a perspective view of a jumper cable set **10** incorporating features in accordance with embodiments of the invention. The jumper cable set **10** includes a first pair of contact clamps **12** and a second pair of contact clamps **14**. When two low-voltage systems (e.g. systems commonly including one or more batteries) are to be connected, the first pair of contact clamps **12** and the second pair of contact clamps **14** are used to connect to high and low (e.g. high and ground) terminals of the two low-voltage systems, similar to the manner in which such connections are commonly made with existing jumper cables. In automotive systems and other vehicles (boats, motorcycles, all-terrain vehicles (ATVs), etc.), the final connection is commonly made to a ground location away from any battery to minimize the risk of any spark igniting hydrogen gas off-gassed by the battery. While this final connection is used or recommended with embodiments of the invention for maximum safety, such sparking is greatly reduced using embodiments of the invention, as no electrical connection is provided between the first pair of contact clamps **12** and the second pair of contact clamps **14** until it has been determined that it is safe to do so.

[0041] The jumper cable set **10** includes a control box **16** that provides one or more features including the features of testing the connections and of preventing any electrical connection until it has been determined that it is safe to provide the electrical connection. Although the control box **16** is illustrated as being physically close to the first pair of contact clamps **12** in FIG. **1**, it should be understood that the control box **16** can be located at any physical position along the jumper cable set **10** where it can control the electrical connection between the two pairs of contact clamps **12**, **14**. Placing the control box **16** near one of the ends of the jumper cable set **10** may provide some benefits to a user of the jumper cable set **10**, such as making it more intuitive to know which

Chic Electrics, Exhibit 1008
Shenzhen Chic Electrics v. Pilot

end of the jumper cable set **10** has a problem by lighting an indicator on one side of the control box **16**. It may also make it easier to see when the unit is powered (such as by a power-on LED). It also keeps the control box **16** in a location less likely to be stepped on, tripped over, etc. Such a location makes it less likely for one of the two pairs of contact clamps **12**, **14** to be disturbed from their attachments to the battery by a user seeking to view the control box **16**, and may assist in keeping the control box **16** out of water that may be on an underlying surface.

[0042] The control box **16** includes a safety circuit that leaves the two low-voltage systems disconnected until the safety circuit determines that it is safe to make the connection. If the safety circuit determines that it is unsafe to proceed, it may sound an audible alarm or illuminate one or more warning lights on the control box **16** to identify any detected potential problem before the problem can cause damage or injury. In some embodiments, the selection of lights illuminated or a physical and/or timed pattern of lights illuminated may indicate the type of problem detected. In other embodiments, no alarm (visual or auditory) is provided; instead, the connection is simply not made.

[0043] When the safety circuit determines that it is safe to proceed, the safety circuit completes the connection between the two low-voltage systems smoothly in a soft start. The soft start prevents or minimizes inductive voltage spikes that could damage sensitive electronics of the low-voltage systems (such as an automobile computer component). In some embodiments, as a connection is made, and audible and/or visual notification may be provided so the user becomes aware that the connection has been made. In the case of a vehicle having a discharged battery, the user can thus be notified that the vehicle can then be started.

[0044] FIG. **2** provides a diagram illustrating the concepts incorporated into one embodiment of a safety circuit **18** such as housed within the control box **16**. The safety circuit **18** includes input terminals **20** and output terminals **22** that are electrically connected to the first and second pairs of contact clamps **12**, **14**. The input terminals **20** and the output terminals **22** are connected in this embodiment by way of one or more power transistors **24**. The power transistor **24** (or transistors) are controlled by a logic circuit or microcontroller **26** that is operatively connected to a detection circuit and power supply **28**. The detection circuit and power supply **28** and the logic circuit or microcontroller **26** may be powered by power received from the input terminals **20** (or alternatively the output terminals **22**, depending on how the jumper cables are connected to active/inactive low-voltage systems), and therefore, no internal battery/power supply need be provided in at least some embodiments. The detection circuitry detects connection conditions on the input terminals **20** and the output terminals **22**. The detection circuitry determines whether it is safe to connect the input terminals **20** and the output terminals **22**. In embodiments where the safety circuit **18** is configured to correct for incorrect connection conditions (not shown in FIG. **2**) such as a reversed-polarity connection, the detection circuitry also detects such conditions and signals that a correction is necessary.

[0045] Control or detection information is passed from the detection circuitry to the logic circuit or microcontroller **26**. The logic circuit or microcontroller **26** uses this information to activate a connected alarm **30** and one or more optical signals **32** based on the conditions detected by the detection circuitry. For example, if proper connection conditions are detected and it is determined that it is safe to make a connection, the logic circuit or microcontroller **26** can activate a green LED as a signal of proper connection prior to or concurrent with making an electrical connection between the two low-voltage circuits connected to the input terminals **20** and the output terminals **22**. Alternatively, a red LED might be activated if an improper connection is detected, along with activation of the alarm **30**. Different signals (via the alarm **30** and/or the optical signal **32** or optical signals **32**) may be used to indicate different detected conditions (e.g. reversed polarity, no connection, short circuit, etc.).

[0046] When the safety circuit **18** determines that it is safe to proceed, the one or more power transistors **24** is used to make the electrical connection between the input terminals **20** and the output terminals **22**, thereby connecting the two low-voltage systems. The one or more power transistors **24** may be controlled so as to make the electrical connection in a "soft start" to eliminate inductive voltage spikes that could cause damage to sensitive electronic components that are part of one or both low-voltage systems. The soft start is implemented in the illustrated embodiment by way of the one or more power transistors **24**, which allow the electrical connection (e.g. the flow of electrical current between the input terminals **20** and the output terminals **22**) to be made slowly, such as over a period of approximately one or a few milliseconds to tens of milliseconds. The one or more power transistors **24** are controlled by small voltages provided by the logic or microcontroller **26**.

[0047] Although the soft start procedure has been illustrated in FIG. **2** using one or more power transistors **24** (which may include one or more power transistor **24** on each of the positive and negative cables, if desired), other embodiments are envisioned, including mechanical embodiments. For example, the soft start concept can be approximated using mechanical relays fitted with suitable filtering components such as inductors and diodes and other spark-suppression components or devices. For example, one system using relays to provide a soft start approximation utilizes a pair of inductors, one on each side of the relay, with back-to-back zener diode pairs between the inductor and the relay and the other line on each side of the relay.

[0048] It is anticipated that such an embodiment might be larger and bulkier than an embodiment using semiconductor-based switches. Those of skill in the art will appreciate configurations of such devices that can be used in such embodiments. Similarly, although the embodiment of FIG. **2** provides one or more power transistors **24** acting as switches to connect the two low-voltage systems, other more-complicated configurations can be provided that provide for additional features, such as automatic polarity reversal. In such an embodiment, if the polarity of the connected input terminals **20** or output terminals **22** has been reversed, the safety circuit **18** uses the extra components to correct the polarity as the input terminals **20** are electrically connected to the output terminals **22**. Thus, in such an embodiment, the safety circuit **18** includes components for selectively connecting either of the input terminals **20** to either of the output terminals **22**. Although such an embodiment does not improve safety over the embodiment of FIG. **2**, it does increase convenience, as a user need not remove and re-connect the previously-made connections between low-voltage systems.

[0049] Embodiments of the invention can be used in a wide variety of systems for connecting to low-voltage systems and/or for connecting between low-voltage systems. Non-

Chic Electrics, Exhibit 1008
Shenzhen Chic Electrics v. Pilot

limiting examples include jumper cable sets, retrofit modules for installation on existing jumper cable sets, booster boxes, battery chargers, ground power units for aircraft, temporary power units for recreational vehicles, trailers, boats, and the like, battery-powered equipment charging cords (fork lifts, floor scrubbers, tugs, etc.), DC power connections for solar cells, fuel cells, and other DC-generating equipment, and DC power connections for electronics. It will be understood that embodiments may be used in a variety of situations.

[0050] Embodiments of the invention provide a wide variety of benefits. Such benefits include the soft start procedure that eliminates inductive voltage spikes. Another benefit is the small size of the safety circuit **18**, such that the safety circuit **18** can often be provided in-line with the connecting cable, such as illustrated in the jumper cable set **10** shown in FIG. **1**. FIG. **3** also illustrates this benefit, showing a perspective view of a representative circuit board that may be used to implement embodiments of the invention. Another benefit is that embodiments keep the power between various terminals off when there are problems that could cause damage or injury, such as reversed cable connections, arcing from short circuits if cable clamps are touching, and prevention of connection to a failed battery incorporated in a low-voltage system. Still other benefits include providing audible and/or visual warnings of unsafe conditions and/or safe connections.

[0051] For example, the following is provided by way of sample actions that can be taken using a jumper cable embodiment. If the cables are connected properly, a steady green LED lamp may be lit to indicate that the connection is safe and ready. The power is applied by a soft start as described above, and the user is able to start the car being jumped. However if the cables are connected backward (and the system does not provide the ability to correct reversed connections), a red LED lamp might flash and the power remains off. The user could then reconnect the cables correctly and try again. Similarly, if the cable clamps accidentally are touching or if the positive clamp is also touching a ground source, the red LED could flash (possibly in a different timing pattern or a different LED), the connection would not be completed, and the user could adjust or reconnect the cables correctly and try again. If a connection is attempted to a low-voltage system having a discharged battery with an internal short circuit, the red LED could flash, the power stays off, and the car could not be jump started, even after attempted repositioning of the cables.

[0052] Other conditions may result in disconnection of the power between the cable clamps in at least some embodiments. For example, the safety circuit **18** may be programmed to detect a successful starting of a car with a low/dead battery. Upon detection of a successful start, the connection between low-voltage systems is no longer necessary, so the safety circuit **18** may be programmed to automatically electrically disconnect the two systems for safe removal of the jumper cables. Similarly, if the safety circuit **18** determines that a previously-good connection fails (such as one of the cable clamps falls off), it may automatically and rapidly interrupt the connection, thereby preventing potential damage or injury. As yet another example, if a user attempts to crank the engine on the discharged car for longer than a selected period of time (such as thirty seconds), the safety circuit **18** may automatically shut off the connection between systems for a predetermined time (such as one minute) to allow the starter and the jumper cables (e.g. the controller itself) to cool. If the power is interrupted in this fashion, a red LED might be lit (again, a different pattern or different light might be used) while the connection is interrupted, and a green LED re-lit when the user is permitted to re-try engine starting.

[0053] As discussed above, when jumper cables are connected to a car having a discharged battery, the polarity of the connection must be correct to avoid damage to the cars. In many instances, a discharged battery still has a significant residual voltage, but lacks sufficient starting power to start the car. In such instances, upon connection of jumper cables in accordance with embodiments of the invention, the polarity of the made connection may be determined by way of measuring the voltage at the connection. However, in some instances, the discharged battery is completely discharged, such as when the headlights have been left on for an extended period. In other instances, a battery may not be completely dead, but a sufficient electrical load is attached to the battery such that the voltage is too low to allow reliable polarity detection. For example, if a polarity determination is attempted with a low battery when the vehicle's headlights are on, the brake pedal is depressed, or the heater is on, etc., the detected voltage may be close to zero, even if the polarity would be detectable if the load were removed. In such instances, the discharged battery provides insufficient voltage to reliably determine correctness of the polarity of the attempted connection by way of measuring the voltage of the discharged battery alone. Instead, a different method is used to determine whether the connection has been made using proper polarity. This allows an automatic jumper cable controller using this method to prevent damage if the cables are accidentally connected backward while still allowing the car with the discharged battery to be started safely.

[0054] To understand the method, FIG. **4** provides an electrical circuit diagram that models the car with the discharged battery. The polarity of the discharged battery can be determined by passing a small amount of current through it (and potentially simultaneously through any connected electrical components). The polarity is determined by observing the resulting voltage created in the battery-car system. When a proper-polarity connection is made, the discharged battery's voltage will rise in a normal fashion; however, when the cables are connected backward, the voltage is limited by the nonlinear behavior of the discharged battery and the automotive equipment attached to it. This allows the control circuitry to identify an incorrectly-connected charging system before it can cause a problem.

[0055] In FIG. **4**, a resistance **36** and a capacitance **38** model headlights, interior lights, and other electrical loads of the automotive equipment that may be present. Meanwhile, a diode **40** represents/models the non-linear behavior of the discharged battery and the diodes in the car's alternator. When the jumper cables are connected correctly, the diode **40** conducts only a negligible amount of current, allowing the voltage to rise in response to the test current. In contrast, when the jumper cables are connected backwards, the diode conducts most of the test current, thus limiting the resulting voltage to a small value. When a reversed connection is detected, the controller can respond in any fashion discussed above (e.g. prevent completing the connection, sound an alarm or illuminate a warning light, automatically reverse the connection, etc.).

[0056] FIGS. **5** and **6** illustrate two embodiments for detecting correct polarity of a discharged battery. In FIG. **5**, a test current source **42** is electrically connected to a system containing a discharged battery **44** and other electrical loads **46**.

Chic Electrics, Exhibit 1008
Shenzhen Chic Electrics v. Pilot

In this embodiment, a single test current is passed through the discharged battery **44**. If the voltage rises above a voltage threshold (say approximately two volts for a twelve-volt battery), the associated charging equipment or other controller determines that the polarity correction is correct, and proceeds to complete the connection to the low-voltage system so the battery can be charged. If the voltage does not rise above the threshold, the connection is not completed. This embodiment has an advantage of simplicity when compared with the embodiment of FIG. **6**.

[0057] In the embodiment of FIG. **6**, a bidirectional current source **48** is used in place of the test current source **42**. Thus, in this embodiment, two test currents are used in succession, one in each direction. The two induced voltages are compared with the voltage threshold, where one will commonly be found to be above the threshold while the other voltage is below the threshold. This embodiment, while more complicated than the embodiment of FIG. **6**, can identify other problem cases, which may be less likely. For example, if both voltages are below the threshold, this condition may be indicative of a battery having an internal short circuit. As another example, if both voltages are above the threshold, it may be indicative of a broken battery cable on the car having the discharged battery. As may be appreciated, these methods of detecting proper polarity of connection to a discharged battery as well as other battery conditions may be implemented into a wide variety of applications, including battery charging systems, battery boosting systems, jumper cable systems, and the like.

[0058] FIG. **7** provides a circuit diagram of one embodiment of the safety circuit **18**. The view of FIG. **7** has been expanded to show illustrative components and component values in FIGS. **8-12**, according to the areas marked in FIG. **7**: area **50** is shown in more detail in FIG. **8**, area **52** is shown in more detail in FIG. **9**, area **54** is shown in more detail in FIG. **10**, area **56** is shown in more detail in FIG. **11**, and area **58** is shown in more detail in FIG. **12**. While an illustrative circuit has been shown and illustrative component values have also been shown, it is anticipated that many different circuit components, values, and variations could alternatively be used. Therefore, the illustrated circuit and component values are provided by way of description of one circuit for implementing an embodiment of the invention, and not by way of limitation.

[0059] FIGS. **13-17** illustrate flow charts describing one set of processes that may be implemented using the circuitry illustrated in FIGS. **7-12**, and are illustrative of features of some embodiments of the invention. In the description that follows, references to pin numbers are in reference to pins of a microcontroller **60** contained in the illustrated circuitry, and the pin numbers so referenced are shown in more detail in FIG. **9**. The pin number references should be understood to be illustrative, and it is anticipated that microcontrollers similar to microcontroller **60** can be programmed to respond to a wide variety of circumstances on varying pins and to provide responses to a wide variety of pins. It is anticipated that one or more of the circuit components (including any microcontrollers similar to microcontroller **60**) may include programmed or programmable components incorporating logic and/or software configured to effect processes similar to those discussed with respect to FIGS. **13-17**, and embodiments of the invention embrace and incorporate such logic and/or software.

[0060] FIG. **13** provides a flow chart for a main process of the circuitry of FIGS. **7-12**. Execution begins at step **62**, where at least one pair of contact claims (e.g. the first pair of contact clamps **12** and/or the second pair of contact clamps **14**) is connected to a voltage source of at least a minimum voltage (here six volts). Connection of one or more of the contact clamps to a voltage supply serves to provide power to the circuit and any components thereof that require such supply to begin working, such as the microcontroller **60**. Once at least one of the pairs of contact clamps is connected, any ports needing initialization are initialized.

[0061] Execution then proceeds to decision block **64**, where a determination is made as to whether to calibrate the system. Whether to calibrate may be determined by an external input that drives one of the pins of the microcontroller to low (or to high), such as by a jumper or other device. If calibration is to occur, execution proceeds to the calibration processes illustrated in FIG. **16**, otherwise, execution proceeds to decision block **66**. At decision block **66**, it is determined whether the user is done connecting cables. This may be determined by way of determining whether voltages measured at the cable clamps are within a few counts of the last several measurements. The measured voltages remain fairly stable once a particular connection has been made. If the user is still connecting the cables, execution loops back for further evaluation of whether the user has completed connecting the cables.

[0062] Otherwise, execution proceeds to decision block **68**, where a determination is made as to whether both pairs of clamps are above a minimum reference voltage. In the illustrated flow chart, the minimum reference voltage is 2.5 volts, but other reference voltages may be used. If both pairs of clamps are not above the minimum reference voltage, execution proceeds to reverse polarity detection processes illustrated in FIG. **14**. If, however, both pairs of clamps are above the minimum reference voltage, execution proceeds to decision block **70**, where a determination is made as to whether batteries are connected to both ends of the jumper cables, such as by determining whether the low voltage cable is not at the open circuit voltage. If it is determined that batteries are not connected to both ends, execution loops back to decision block **66**. If, however, batteries are connected at both ends, execution proceeds to step **72**, where the two low-voltage power systems are electrically connected (such as by making pin **10** of the microcontroller high to control high-current transistors). As discussed above, the electrical connection of the two low-voltage systems can be made by way of a soft start.

[0063] Execution then proceeds to decision block **74**, where a determination is made as to whether too much current is flowing. This determination is made by determining whether the absolute value of the difference in currents in the two cables (positive and negative) is greater than a selected reference current. If too much current is flowing, execution proceeds to cool down procedures illustrated in FIG. **15**. If the reference current is not exceeded, execution proceeds to decision block **76**, where a determination is made as to whether a brown-out condition (a condition where there is an undervoltage on the supply side that may cause the power transistors to fail to turn on completely) is detected. If such a condition is detected, execution proceeds to the cool-down procedures of FIG. **15**. If not, execution proceeds to decision block **78**, where a determination is made as to whether at least a minimum amount of current (illustrated as ten amps) is

Chic Electrics, Exhibit 1008
Shenzhen Chic Electrics v. Pilot

flowing through the cables. If the minimum current is flowing, then the cables are still needed, and execution loops back to step **72**. If, however, the current flow has dropped below the minimum current (e.g. the car with the discharged battery has been started, etc.), execution proceeds to step **80**, where the microcontroller **60** electrically disconnects the two low-voltage systems (e.g. by making pin **10** low). Thereafter, execution either terminates (not shown) or loops back to decision block **66** for detection of a need to electrically re-connect the cable ends.

[0064] FIG. **14** shows an illustrative polarity detection procedure that may be used when both pairs of cable clamps are not determined to be above a minimum reference voltage, as determined at decision block **68** of FIG. **13**. Execution proceeds to decision block **82**, where a determination is made as to which cable is low voltage. If Cable A (corresponding, for example, to the first pair of contact clamps **12**) is low voltage, execution proceeds to step **84**, where one or more red LEDs (or some other signal) corresponding to Cable A are turned on to provide a signal to the user of the cables (e.g. pin **7** is made high). Alternatively, if Cable B is low voltage, execution proceeds to step **86**, where one or more red LEDs (or some other signal) corresponding to Cable B are turned on to provide a signal to the user of the cables (e.g. pin **8** is made high).

[0065] In either instance, execution then proceeds to decision block **88**, where a determination is made as to whether the cable having the lower voltage is at a voltage below a negative reference voltage (illustrated as negative 2.5 volts). If the voltage of the cable having the lower voltage is determined to have such a voltage, that cable is connected in reverse polarity, and execution returns to FIG. **13**, Location **13**A, immediately prior to decision block **66**. Thus, whichever red LEDs (or other signal) were turned on will remain on until the cable connected in reverse polarity is removed and reconnected with proper polarity.

[0066] If, the lower voltage clamp is not more negative than the negative reference voltage, one of two circumstances may be present. First, the polarity may be correct, but the lower-voltage cable (e.g. the portion of the control circuit connected to the lower-voltage system) may be connected to a battery so discharged as to prevent reliable detection of the polarity based on voltage measurements alone. Second, the polarity may be incorrect, but the lower-voltage cable (e.g. portion of the control circuit) may be connected to a battery so discharged as to prevent reliable detection of the polarity based on voltage measurements alone. In either case, the control circuit may apply a small current to the system to determine which circumstance is occurring, so execution proceeds to step **90**, where a small current is permitted to flow from the high-voltage cable to the low-voltage cable (e.g. pin **5** is made high). In the illustrated case, the current is shown as being five amps.

[0067] Execution then proceeds to decision block **92**, where a determination is made as to whether any noise associated with opening a short on the cable has been detected. If so, execution proceeds to step **94** where the current is turned off (e.g. pin **5** made low). Execution then proceeds to step **96**, where the red LEDs are turned off (pins **7** and/or **8** made low), and then proceeds to FIG. **13**, Location **13**A, immediately prior to decision block **66**. As long as the short circuit condition exists, execution will then return to the processes of FIG. **14** and loop back to Location **13**A of FIG. **13**, causing the process to repeatedly pass through one of steps **84** and **86**, followed by step **96**, causing one set of LEDs (or other signal) to flash, thereby indicating to the user the presence of a short circuit.

[0068] As discussed above, a reversed connection, such as to a system having a very discharged battery, may conduct current similarly to a short circuit, which may therefore also signal a reversed connection. Therefore, a user seeing a flashing red LED may be instructed (or know from instructions for the cables) to attempt to reverse the connection. Then, if the flashing red LED continues, the user may be instructed to make no further attempts to connect the two low voltage systems or to jump start the discharged vehicle because a short circuit appears to exist.

[0069] If no short circuit is detected at decision block **92**, execution proceeds to decision block **98**, where a determination is made whether both pairs of clamps are above a reference voltage (here illustrated as 2.5 volts). If the polarity of the low voltage cable connection is correct, the small current will eventually raise the voltage of the discharged system above this reference voltage. Therefore, until both pairs of clamps are above 2.5 volts, execution loops back to decision block **92** as shown. Once both pairs of clamps are above 2.5 volts, execution proceeds to step **100**, where the small current is turned off (e.g. pin **5** made low), and then execution proceeds to step **102**, where all red LEDs are turned off (e.g. pins **7** and/or **8** made low). Execution then returns to FIG. **13** at Location **13**B, just prior to step **72**, where the low-voltage systems are electrically connected. Thus, the low-voltage systems are electrically connected at step **72** after the process of FIG. **14** determines that the connections have been made with proper polarity.

[0070] FIG. **15** illustrates a representative cool-down procedure that may be used in situations where either an over-current condition (e.g. decision block **74**) or a brown-out condition (e.g. decision block **76**) is detected. If either condition lasts for too long, the condition can lead to failure of the power transistors, especially when less-expensive power transistors are used. In the case of a brown-out, the lower voltage prevents the power transistors from turning on (or staying on) completely, which may increase the heat losses experienced by the transistors, leading to failure. Over-current conditions can also destroy the transistors. To allow for the use of less-expensive power transistors, the process illustrated in FIG. **15** permits shutoff of the transistors before failure occurs and gives the transistors time to cool off before use of the transistors resumes. Although the description of FIG. **15** is directed to the primary power transistors, it should be understood that similar processes may be used for the transistors providing the low-current current discussed with respect to FIG. **14**.

[0071] In FIG. **15**, execution begins at step **104**, where a logo LED (which, when on, may be indicative that the cables are powered and ready for normal use) is turned off (e.g. pin **6** made low). Execution then proceeds to step **106**, where all the red LEDs (or other indicators) are turned on (e.g. pins **7** and **8** made high), indicative of the overheat fault condition. At step **108**, the low-voltage systems are electrically disconnected (e.g. pin **10** made low and pin **9** made high). At step **110**, the power connect system is reset (e.g. pin **9** made low), while at step **112**, the system waits for a period of time to allow the transistors to cool. The microcontroller **60** may be programmed with a model (such as linear over time) approximating heat losses of the transistors over time to ensure that the period of time where the transistors are turned off is

Chic Electrics, Exhibit 1008
Shenzhen Chic Electrics v. Pilot

adequate to permit sufficient cooling of the transistors before a restart is attempted. Similarly, a thermal model (such as a time integration of current squared times resistance losses) may be used by the microcontroller to approximate heating of the transistors in normal use for protective shut-off and restart procedures as outlined in somewhat more detail in FIG. **17**.

[0072] Once sufficient time has passed to allow the transistors to be safely turned on again, execution proceeds to step **114**, where the logo LED is turned on (e.g. pin **6** made high), and to step **116**, where the red LEDs (or other signals) are turned back off (e.g. pins **7** and **8** made low). Thereafter, execution returns to Location **13**A of FIG. **13**, just prior to decision block **66**, where safety checks are re-executed before the low-voltage systems are re-connected at step **72**. Thus, if one or more of the connections to one of the low-voltage systems has changed or if any other circumstance has changed during the cool-down procedure of FIG. **15**, power may not be reconnected immediately or at all.

[0073] FIG. **16** shows an example calibration process that may be used when calibration is desired (such as after decision block **64** in FIG. **13**. Execution begins at step **118**, where a wait period passes to allow equilibrium has been reached in the system. Execution then proceeds to decision block **120**, where a determination is made as to whether both cables are close to a predetermined calibration reference voltage, illustrated in this case as thirteen volts. If not, execution loops at this point (or back to before the wait period of step **118**) until this condition is met. It is assumed at this point that both cables are connected to the same voltage source, and at step **122** the difference is stored as a difference offset between the cables. Once calibration is complete, the logo LED is turned on (e.g. pin **6** made high) at step **124**, and all red LEDs are turned on (e.g. pins **7** and **8** made high) at step **126**, signaling the completion of the calibration to the user. Execution may then end, or may return to Location **13**A of FIG. **13** for regular use of the cables.

[0074] FIG. **17** shows an example interrupt process that may occur at any time during any of the other processes discussed above. For example, the microcontroller **60** may be programmed to run the interrupt process at fixed intervals to monitor conditions of the cables and circuitry. Execution begins with decision block **128**, where it is determined whether there is demand for the LED lights (or other signals). If so, execution proceeds to decision block **130**, where the microcontroller **60** determines whether the B light (corresponding to one of the cables) is on. If yes, it is turned off at step **130**, and if no, it is turned on at step **134**. Similarly, at decision block **136**, the microcontroller **60** determines whether the A light (corresponding to the other cable) is on. If yes, it is turned off at step **138**, and if no, it is turned on at step **140**. Execution then proceeds to decision block **142** (where execution also proceeds if there is no demand for the LED lights.

[0075] At decision block **142**, a determination is made as to whether there is demand for the low-current supply (in this case illustrated as five amps). If yes, execution proceeds to a determination of whether the low-current transistor is over its power dissipation limit (e.g. is in danger of overheating or failing due to heat) at decision block **144**. If yes, the low-current transistor is turned off at step **146**. If not, the low-current transistor is left on. After the low-current supply check (and change, if any), execution proceeds to decision block **150**, where a determination is made as to whether there is demand for the main power transistors. If yes, execution proceeds to a determination of whether the main power transistors are over their power dissipation limits (e.g. in danger of overheating or failing due to heat) at decision block **152**. If yes, the main power transistors are turned off at step **154**. If not, the main power transistors are left on at step **156**. After the main power transistors check, execution returns to whatever point in the process where the interrupt procedure was begun.

[0076] Although the processes illustrated in FIGS. **13-17** have been illustrated in particular orders, it should be understood that the order of specific steps and decisions is not always critical. For example, many of the steps and decisions may be taken essentially simultaneously or simultaneously. In addition, in any situation where it is possible to vary the order of steps to an order other than the specifically-illustrated order, it should be understood that such orders are embraced by the embodiments of the invention. Thus the particular ordering of steps illustrated is provided by way of instruction and illustration only, and not by way of limitation.

[0077] Embodiments of the invention have been described above with respect to connecting two low-voltage systems together, such as with jumper cables. In addition, it has been indicated that embodiments of the invention can be incorporated into other devices, such as booster boxes, battery chargers, ground power units for aircraft, temporary power units, battery-powered equipment charging cords, etc. In some instances, embodiments of the invention may be incorporated into batteries and battery packs. In such embodiments, internal elements of the battery or battery pack, or the battery or battery pack itself may be viewed as or considered a first low-voltage system, and the item to be powered by the battery or battery pack may be viewed as or considered a second low-voltage system. Such embodiments of the invention may be used to prevent injury and damage that may be caused by connecting or attempting to connect the battery or battery pack to the item incorrectly or when a dangerous condition such as a short circuit exists in the item.

[0078] For example, FIG. **18** shows a battery **160** of a type illustrating certain battery-incorporated embodiments. The battery **160** includes a positive terminal **162** and a negative terminal **164**. The positive terminal **162** and the negative terminal **164** serve to provide connections for electrically connecting the battery **160** to a low-voltage system. For example, many vehicles utilize batteries of a type similar to the battery **160**, and the battery **160** may be used to replace a standard battery for a vehicle. Batteries or battery packs similar to or incorporating features of the battery **160** (as discussed below and herein) may be used for any of a variety of low-voltage systems utilizing one or more batteries or battery packs.

[0079] The battery **160** of FIG. **18** incorporates the safety features discussed herein. To do this, circuitry similar to that discussed herein is incorporated into the battery **160**. Such circuitry may include a detection circuit and a power-controlling circuit. Thus, with reference to FIG. **2**, the input terminals **20** of the circuit depicted in FIG. **2** may be connected internally to portions of the battery **160** so as to be provided with or receive the energy supplied by one or more cells of the battery **160**. The output terminals **22** are electrically connected to the positive terminal **162** and the negative terminal **164** of the battery, thereby providing power to the positive terminal **162** and the negative terminal **164**, and to any low-voltage system connected thereto, as long as the safety circuit

Chic Electrics, Exhibit 1008
Shenzhen Chic Electrics v. Pilot

18 determines that it is safe to provide power to the positive terminal **162** and the negative terminal **164**.

[0080] The battery **160** of FIG. **18** may include any of a variety of features designed to communicate with a user of the battery **160**. For example, the battery **160** may include an indicator **166**. The indicator **166** may include one or more indicator lights or LEDs and/or one or more audible alarms to communicate a status of the battery **160** and/or a connection thereto. In some embodiments, the battery **160** may include a display **168**. The display **168** may be a static display (such as instructions explaining how to interpret signals communicated by the indicator **166**), or it may be a variable display, such as a LCD or other variable display capable of displaying information to a user in a more complex manner (such as by way of changing text or icons displayed on the variable display). The illustrated indicator **166** and display **168** are provided by way of example only, and it should be understood that any of a variety of mechanisms may be used to provide information to a user of the battery **160**.

[0081] Various embodiments of the battery **160** provide any or all of the functions discussed herein with respect to the various embodiments of jumper cables. For example, if circuitry incorporated into the battery **160** detects a short circuit between the positive terminal **162** and the negative terminal **164** (such as might be caused by a metal tool inadvertently laid across the positive terminal **162** and the negative terminal **164** of the battery **160**), the circuitry determines either not to supply power to the positive terminal **162** and the negative terminal **164** or, if power was previously being supplied, determines to interrupt power to the positive terminal **162** and the negative terminal **164**. This prevents/reduces the chances of sparks, electrical shocks, arcs, inadvertent draining of the energy stored in the battery **160**, and other problems. When a short circuit is detected, one or more of the indicator **166** and the display **168** may provide a visible or audible indication that a short circuit condition exists.

[0082] Similarly, the circuitry in the battery (or other device) may respond to any of a variety of events while power is being supplied. There are several non-limiting examples of situations where the circuitry may determine to interrupt power. In one example, an over-current condition is detected. In another example, an undesirable temperature is detected, such as at a cell of the battery **160**, at a terminal of the battery **160**, at some point of the circuitry, or at some other point of the low-voltage system to which the battery **160** is connected. Thus, certain embodiments embrace the use of thermal detectors in communication with the circuitry of the battery **160** (or other device in which the circuitry is incorporated (e.g. jumper cables) by any method of communication discussed herein or later invented. In another example, the circuitry may detect a voltage/current waveform associated with a fault such as a ground fault or an arc fault, or any other fault, and may determine to interrupt power accordingly. Any other fault criteria may be used to make a determination to interrupt power.

[0083] The battery **160** may also incorporate off-until-needed features similar to those incorporated into the jumper cables. Thus, when the battery **160** is disconnected (physically and/or electrically) from any normal load, no voltage difference may be provided between the positive terminal **162** and the negative terminal **164**, or only a minimal (e.g. test) voltage difference may be detected between the positive terminal **162** and the negative terminal **164**. This further improves safety of the battery **160**. The battery **160** may be programmed with a variety of behaviors for a variety of desired functionalities. For example, while the flow chart of FIG. **13** illustrates disconnecting power systems when less than ten amps is flowing between low voltage systems (analogous here to less than ten amps flowing to/from the battery from/to the connected system, e.g. car), it should be understood that it may be desirable to maintain power supplied by the battery **160** at much lower current flows. For example, in a battery connected to a vehicle, it may be desirable to run one or more accessories of the vehicle that may use significantly less than ten amps.

[0084] Thus, with respect to implementing the flow charts depicted in FIGS. **13-17** in a battery-integrated system, it should be understood that some aspects of the flow charts may be modified as desired to achieve the desired functionality for a given situation. For example, because the system is integrated into the battery **160** itself, the system may be programmed and the flow charts simplified according to known information. In such a system, the safety circuitry is presumably correctly connected to the internal cell or cells of the battery, so any steps directed to ensuring that the first connection is correctly made may be omitted or modified appropriately.

[0085] Embodiments of the battery **160** incorporate the reverse-polarity detection features discussed herein. Thus, the battery **160** is able to detect not only short circuit conditions, but will also detect when it has been improperly installed into a low-voltage system, such as a vehicle. These features are most advantageous in batteries designed for low voltage systems such as vehicles where the polarity of the low-voltage system is detectable using the test functionalities discussed herein with respect to FIGS. **4-6**. It will be understood that in a vehicle or other low-voltage system designed for a single battery, the only voltage source is the battery **160** itself, so the response of the vehicle or other low-voltage system to test currents/voltages supplied by the battery **160** are used to determine whether a proper-polarity connection has been made. Thus, the battery **160** may include a polarity test circuit configured to supply a test current to the connected low-voltage system and measure a resulting voltage to determine a proper polarity of a low-voltage system connected to the battery **160**. When an improper-polarity connection is made/attempted, the battery **160** uses one or both of the indicator **166** and the display **168** to communicate to the user that the polarity has been reversed and that remedial action should be taken.

[0086] FIGS. **19** and **20** depict a circuit diagram for an alternative exemplary circuit that may be used with certain embodiments of the invention. Because of the size of the circuit diagram depicted in FIGS. **19** and **20**, expanded views of the circuit are depicted in FIGS. **21-27**. Specifically, areas of FIGS. **19** and **20** defined by the dashed lines are depicted in FIGS. **21-27** as follows: area **170** of FIG. **19** is depicted in more detail in FIG. **21**, area **172** of FIG. **19** is depicted in more detail in FIG. **22**, area **174** of FIG. **19** is depicted in more detail in FIG. **23**, area **176** of FIG. **19** is depicted in more detail in FIG. **24**, area **178** of FIG. **19** is depicted in more detail in FIG. **25**, area **180** of FIG. **19** is depicted in more detail in FIG. **26**, and area **182** of FIG. **19** is depicted in more detail in FIG. **27**. In the expanded views of FIGS. **21-27**, representative components and component values have been illustrated by way of example only. It will be understood that other circuits, components, and component values may be used to create circuits of varying degrees of similarity to the

Chic Electrics, Exhibit 1008
Shenzhen Chic Electrics v. Pilot

illustrated circuit having functionality similar to that discussed herein. Such embodiments are embraced within the scope of the present invention.

[0087] In the control circuit embodiment shown in FIGS. **19-27** two pairs of field-effect transistors (FETs) are used in a back-to-back configuration. One transistor of each pair controls the current flow in one direction. In the illustrated embodiment of FIGS. **19**, the first pair of transistors are labeled Q**2** and Q**3** in FIGS. **21-22**, and the second pair of transistors is labeled Q**1** and Q**4**. Two pairs of FETs are used in the current example to provide a desired amount of maximum current flow. Therefore, certain embodiments embrace the use of a single pair of transistors, as well as the use of three, four, five, or more pairs of transistors, as desired to achieve particular performance characteristics. Benefits are achieved through the independent control of these two pairs (or other amounts of pairs) of transistors. One of the pair of transistors is used to provide feedback to precisely control the current through the other of the pair of transistors, thereby controlling the total current flow through the jumper cable controller. In situations where the direction of current flow is known, such as where the controller is incorporated into a battery or battery pack, one transistor from each pair may be replaced by a static resistor as a current feedback device (current shunt resistor), as will be discussed below.

[0088] In the illustrated embodiment, the controller first determines a direction of current flow through the circuit to choose which transistor of the pair of transistors is to function as a current shunt resistor. After identifying the transistor(s) to serve as a current shunt resistor, those transistors are turned fully on, establishing a known resistance through the transistors acting as the current shunt. An amplifier circuit permits the voltage drop to be measured by a micro-controller. The micro-controller uses the measured voltage drop to determine the gate voltage for the controlling set of transistors and thereby the current through the entire circuit. The direction of flow of current through the jumper cables does not affect function of the circuit. Cost of the circuit components is relatively low.

[0089] Thus, if current is to flow from left to right in FIG. **19**, one or both of transistors Q**3** and Q**4** are turned fully on to serve as the current shunt resistor. Then, the controller measures the voltage drop across the transistors Q**3** and Q**4** as one or both of transistors Q**1** and Q**2** is slowly turned on, and sets the gate voltage for the transistor(s) Q**1** and Q**2** accordingly to achieve the desired current flow through the transistor(s) Q**1** and Q**2** and thus through the entire circuit. When current is to flow from right to left in FIG. **19**, one or both of transistors Q**1** and Q**2** are turned fully on to serve as the current shunt resistors, and the controller measures the voltage drop across those transistors as one or both of transistors Q**3** and Q**4** are turned on to the desired level.

[0090] In an embodiment where less current is needed, one of the pairs of transistors may be omitted from the circuit shown in FIG. **19**. Thus, either the pair of transistors Q**2**, Q**3** may be omitted, or the pair of transistors Q**1**, Q**4** may be omitted. Conversely, if greater current flow is needed, additional pairs of transistors may be provided until the desired current capacity is met, with each pair of transistors connected to all other pairs through extension of the cross configuration shown connecting the transistors Q**1**, Q**2**, Q**3**, and Q**4** in FIGS. **19**, **21**, and **22**.

[0091] As mentioned above, in certain embodiments, it may be known that the current will only flow in a certain direction. For example, the controller may be incorporated into a battery to provide safety features as discussed herein. In this instance, it may not be necessary to utilize one or more transistors as a current shunt resistor: instead one or more static resistors may be used to reduce costs. While multiple static resistors may be used for multiple transistors, it will be appreciated from the parallel configuration of the circuit of FIG. **19** that a single static resistor may be used for multiple transistors. In such embodiments, the voltage drop may be measured across the static resistor(s) and this may be used to control the gate voltage at the transistor(s) in a fashion similar to that described above.

[0092] There are significant benefits of circuits such as the embodiment of FIGS. **19-27**. As one example, a jumper cable or other connection system incorporating the embodiment of FIGS. **19-27** can be used to control current for jump starting vehicles having low-voltage systems of dissimilar voltages. Thus, a person could jump start a vehicle having a six-volt electrical system using a vehicle having a twelve-volt electrical system or a twenty-four-volt electrical system. The controller recognizes the lower-voltage system and then uses the two-transistor pair to supply sufficient current while preventing the voltage from rising higher than is safe or desirable for the six-volt system. The same could be true for jump starting between an overland truck having a twenty-four-volt system and a light car or truck having a twelve-volt electrical system.

[0093] As another example of benefits provided by such embodiments, jumper cables incorporating such embodiments may be used to test the viability of a battery in a vehicle. To perform the test, one end of the jumper cables (e.g. one set of either the first pair of contact clamps **12** or the second pair of contact clamps **14**) is connected together to form a short circuit between the positive and negative leads. The other end of the jumper cables is connected to the battery to be tested. The controller initiates a battery test and uses the control circuitry to flow a known significant amount of current through the battery while monitoring the voltage drop of the battery. For example, if the controller allows three hundred amps to flow through the module for a few seconds, the battery is presumably good if it is able to maintain proper voltage during the test.

[0094] Another example of benefits provided by embodiments such as illustrated in FIGS. **19-27** is permitting the jumper cable to be used to test the viability of a vehicle's alternator. One end of the jumper cables is shorted as with the battery test, and various current load profiles can be imposed on the alternator up to and beyond the charging limit of the vehicle's alternator. The controller monitors the voltage of the alternator while the test is being performed. The voltage behavior of the alternator under these electric loads allows the controller to determine if the alternator is functioning properly or not.

[0095] Jumper cables incorporating the circuit embodiment of FIGS. **19-27** and similar circuits may be used to provide trickle charging to a battery. For example, in some instances it may be desirable to keep a battery charged, but do no more than that. Using jumper cables incorporating embodiments of the invention, the controller permits a precise trickle charge rate to be supplied to keep a battery charged.

[0096] Additionally, such embodiments of the jumper cables/jumper cable control circuitry permit the setting of an over-current threshold. This permits certain measures of protection, such as while the jumper cables are connected to a vehicle being simultaneously worked on. For example, if an

Chic Electrics, Exhibit 1008
Shenzhen Chic Electrics v. Pilot

individual is planning on working on a vehicle while jumper cables are connected to the vehicle's electric system, an over-current threshold may be set, such as to twenty amps, to provide a certain amount of power to the vehicle without supplying so much as to be potentially dangerous for either the person or the vehicle's components. Thus, embodiments of the invention provide further safety improvements over existing systems for connecting low-voltage systems such as vehicles.

[0097] Certain controller/circuit embodiments, such as that illustrated in FIGS. **19-27**, incorporate the ability to communicate status, performance levels, and any parameter the controller measures. Communication directed to the controller/controller circuit is provided by way of imposing a communication signal onto the jumper cable wires. The micro-controller can detect this signal using the same detection circuit that is used to measure the cable voltage. For example, this could include a five volt peak-to-peak signal imposed on the cable voltage. The micro-controller could filter or otherwise segregate the AC and DC components of the cable voltage, allowing input communication simultaneous with jumper cable use.

[0098] Communication out from the device can be accomplished in several ways. One way to communicate out from the controller is using the jumper cable wires in the same fashion as just described for communications to the controller. Thus, the control module imposes the communication signal on the jumper cable lines. A second communications technique out from the device may be accomplished using one or more user-feedback LEDs as optical transmitter. In this instance, the micro-controller implements an optical communication protocol that is clocked out through the LED or LEDs. An optical receiver decodes the information passed out through the LED or LEDs as encoded by the jumper cable control unit.

[0099] Communication ability such as provided in the described embodiments provides several benefits to jumper cables incorporating this ability. As one example, an external tool can provide an enhanced user interface with the jumper cable control module. For example, an external device could slide over the jumper cable up to the control module, or could be otherwise placed over the control module so as to sense one or more LED lights of the control module. A user might then be able to see a display of the amount of current flowing during a jump start, could view relevant performance criteria detected by a battery test as described above, or could view relevant performance criteria detected by an alternator test as described above.

[0100] Furthermore, integration with other tools may be achieved. For example, a vehicle analyzer, engine diagnostic tool, or other test system could obtain real-time information about the electrical system performance. Additionally, the test systems could command the jumper cable control module to apply variable or large electrical loads as part of a testing protocol. This may enhance the test systems' diagnostic capabilities.

[0101] In at least some embodiments, the communication capability of the jumper cable controller may be used for reprogramming of the controller. For example, updated firmware may be programmed after manufacture is complete, or even after a customer has taken possession of the product. In addition, the communication capability permits interactive testing of the jumper cable set after manufacture and before it leaves the production facility.

[0102] The battery-integrated low-voltage safety features discussed herein may be used in a wide variety of circumstances and systems, including as batteries and battery packs of vehicles such as standard gas- or diesel-powered vehicles, hybrid vehicles, plug-in hybrid vehicles, marine vehicles, and the like, or in any system using one or more batteries and/or battery packs.

[0103] The present invention may be embodied in other specific forms without departing from its spirit or essential characteristics. The described embodiments are to be considered in all respects only as illustrative and not restrictive. The scope of the invention is, therefore, indicated by the appended claims, rather than by the foregoing description. All changes which come within the meaning and range of equivalency of the claims are to be embraced within their scope.

What is claimed and desired to be secured by Letters Patent is:

1. A battery-integrated safety circuit for use in establishing that a low-voltage system is safely and properly connected to a battery, comprising:

a pair of output terminals;

a detection circuit operatively connected to the output terminals and configured to detect whether the output terminals are properly connected to a low-voltage system with a correct polarity; and

a power-controlling circuit configured to provide electrical power to the output terminals only when a proper connection of correct polarity has been detected.

2. A battery-integrated safety circuit as recited in claim **1**, wherein the power-controlling circuit provides electrical power to the output terminals using a soft start procedure that reduces inductive voltage spikes.

3. A battery-integrated safety circuit as recited in claim **2**, wherein the power-controlling circuit controls one or more power transistors that are used to provide electrical power to the output terminals using the soft start procedure.

4. A battery-integrated safety circuit as recited in claim **2**, wherein the soft start procedure provides electrical power to the output terminal over a period of approximately a millisecond to tens of milliseconds.

5. A battery-integrated safety circuit as recited in claim **1**, further comprising a polarity test circuit configured to supply a test current to the output terminals and measure a resulting voltage to determine a proper polarity of a low-voltage system connected to the output terminals.

6. A battery-integrated safety circuit as recited in claim **5**, wherein the polarity test circuit is configured to supply test currents of different directions and to compare the voltages caused by the test currents.

7. A battery containing a battery-integrated safety circuit comprising:

a positive terminal;

a negative terminal; and

a safety circuit operatively connected to the positive terminal and the negative terminal and configured to supply power through the positive and negative terminals only when a connection between the terminals and a low-voltage system has been properly made with a correct polarity.

8. A battery as recited in claim **7**, wherein the battery prevents the supply of power to the positive and negative terminals when a short circuit exists between the positive and negative terminals.

Chic Electrics, Exhibit 1008
Shenzhen Chic Electrics v. Pilot

9. A battery as recited in claim **7**, wherein the safety circuit comprises a polarity test circuit configured to supply a test current to the terminals and measure a resulting voltage to determine a proper polarity of a low-voltage system connected to the battery.

10. A battery as recited in claim **7**, wherein the safety circuit comprises:

a detection circuit operatively connected to the terminals and configured to detect whether the terminals are connected to the low-voltage system with the correct polarity; and

a power-controlling circuit configured to provide electrical power to the terminals.

11. A battery as recited in claim **10**, wherein the power-controlling circuit is configured to interrupt power to the positive and negative terminals after it has been supplied when an improper condition is detected.

12. A battery as recited in claim **11**, wherein the improper condition comprises a condition selected from the group of:

an overcurrent;

a temperature that is higher than desired;

a ground fault;

an arc fault; and

a short circuit.

13. A battery as recited in claim **1**, wherein the safety circuit comprises one or more field-effect transistors configured to permit precise control of the flow of current from the battery.

14. A safety circuit for use in connecting two low-voltage systems comprising:

a first pair of terminals for connecting the safety circuit to a first low-voltage system;

a second pair of terminals for connecting the safety circuit to a second low-voltage system;

at least one pair of transistors in a back-to-back configuration, whereby one transistor of each pair of transistors controls a flow of current between the first and second pairs of terminals in one direction so that the safety circuit can control the flow of current between the first and second pairs of terminals in either direction;

an amplifier circuit configured to measure a voltage drop of a selected transistor of each pair of transistors when the selected transistor is switched fully on as a current shunt; and

a micro-controller operatively connected to the amplifier circuit and to each pair of transistors and configured to use the measured voltage drop to determine a gate voltage for the other of each pair of transistors to control the current between the first and second pairs of terminals.

15. A safety circuit as recited in claim **14** incorporated into a jumper cable.

16. A safety circuit as recited in claim **14** adapted to connect and transfer power between two low-voltage systems of dissimilar operating voltages.

17. A safety circuit as recited in claim **14**, wherein the safety circuit is capable of being configured to limit current flow between the first and second pairs of terminals to a maximum current.

18. A safety circuit as recited in claim **14** wherein the micro-controller is adapted to perform a low-voltage system test of one of:

a battery, by allowing a certain known amount of current to flow through the battery for a short time when the first pair of terminals is electrically connected to the battery and when the second pair of terminals is short-circuited; and

an alternator, by imposing various current load profiles on the alternator when the first pair of terminals is electrically connected to the alternator and when the second pair of terminals is short-circuited.

19. A safety circuit as recited in claim **14**, further comprising a communication system permitting communication with devices external to a device incorporating the safety circuit.

20. A safety circuit as recited in claim **19**, wherein the communication system is configured with external devices using one of:

an AC signal imposed on a DC voltage at one of the first and second pairs of terminals; and

an optical transmission and receiving system between the safety circuit and the external devices.

* * * * *

Chic Electrics, Exhibit 1008
Shenzhen Chic Electrics v. Pilot