US005793980A

United States Patent [19]

Glaser et al.

[11] Patent Number: 5,793,980

[45] Date of Patent: Aug. 11, 1998

[54] **AUDIO-ON-DEMAND COMMUNICATION SYSTEM**

[75] Inventors: **Robert D. Glaser**, Seattle, Wash.; **Mark O'Brien**, Cambridge, Mass.; **Thomas B. Boutell**, Seattle, Wash.; **Randy Glen Goldberg**, Princeton, N.J.

[73] Assignee: **RealNetworks, Inc.**, Seattle, Wash.

[21] Appl. No.: **347,582**

[22] Filed: **Nov. 30, 1994**

[51] **Int. Cl.**[6] **H04H 1/02**; G06F 13/42

[52] **U.S. Cl.** **395/200.61**; 395/200.49; 395/200.67; 370/528

[58] **Field of Search** ..... 395/200.13, 200.09, 395/200.14, 200.17, 806, 807, 849, 850, 200.61, 200.49, 200.67, 200.66; 370/231, 476, 486, 496, 528; 364/514 A, 514 C; 375/257, 369, 370; 345/302

[56] **References Cited**

U.S. PATENT DOCUMENTS

3,882,538	5/1975	Lowe .
4,253,157	2/1981	Kirschner et al. .
4,504,705	3/1985	Pilloud .
4,506,387	3/1985	Walter .
4,581,484	4/1986	Bendig .
4,611,277	9/1986	Kemppainen et al. .
4,658,093	4/1987	Hellman .
4,827,256	5/1989	Yokoyama .
4,845,756	7/1989	Seen et al. .
4,899,299	2/1990	MacPhail .
4,905,094	2/1990	Pocock et al. .
4,941,123	7/1990	Thompson .
4,975,691	12/1990	Lee .
4,987,529	1/1991	Craft et al. .
4,999,806	3/1991	Chernow et al. .

(List continued on next page.)

FOREIGN PATENT DOCUMENTS

309298	3/1989	European Pat. Off. .
WO93/16557	8/1993	WIPO .
WO94/14273	6/1994	WIPO .

OTHER PUBLICATIONS

PCT/US95/14765 PCT International Search Report dated Apr. 11, 1996.

Stephen J. Bigelow, Modem Communications Standards, Electronics Now, pp. 35–42, Sep. 1994.

PCT Written Opinion Mailed Nov. 14, 1996 International Application Number PCT/US95/14765.

C. Topolcic; "experimental Internent Stream Protocol, Version 2 (ST–II)"; Internet Working Group Request for Comments RFC–1190, Oct. 1990.

Primary Examiner—Mark H. Rienhart
Attorney, Agent, or Firm—Knobbe, Martens, Olson & Bear, LLP

[57] **ABSTRACT**

An audio-on-demand communication system provides real-time playback of audio data transferred via telephone lines or other communication links. One or more audio servers include memory banks which store compressed audio data. At the request of a user at a subscriber PC, an audio server transmits the compressed audio data over the communication link to the subscriber PC. The subscriber PC receives and decompresses the transmitted audio data in less than real-time using only the processing power of the CPU within the subscriber PC.. According to one aspect of the present invention, high quality audio data compressed according to lossless compression techniques is transmitted together with normal quality audio data. According to another aspect of the present invention, metadata, or extra data, such as text, captions, still images, etc., is transmitted with audio data and is simultaneously displayed with corresponding audio data. The audio-on-demand system also provides a table of contents indicating significant divisions in the audio clip to be played and allows the user immediate access to audio data at the listed divisions. According to a further aspect of the present invention, servers and subscriber PCs are dynamically allocated based upon geographic location to provide the highest possible quality in the communication link.

6 Claims, 17 Drawing Sheets

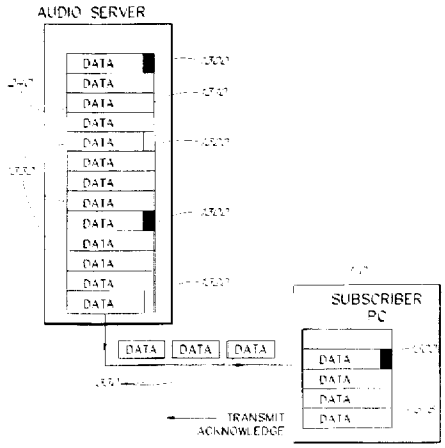

OTHER PUBLICATIONS

5,001,580	3/1991	Aranovsky et al. .	
5,051,822	9/1991	Rhodes .	
5,057,932	10/1991	Lang .	
5,109,482	4/1992	Bohrman .	
5,132,992	7/1992	Yurt et al. .	
5,195,092	3/1993	Wilson et al.	370/528
5,237,322	8/1993	Heberle .	
5,247,347	9/1993	Litteral et al. .	
5,253,341	10/1993	Rozmainth et al. .	
5,262,875	11/1993	Mincer et al. .	
5,282,028	1/1994	Johnson et al. .	
5,283,819	2/1994	Glick et al. .	
5,289,545	2/1994	Jestice .	
5,297,249	3/1994	Berstein et al. .	

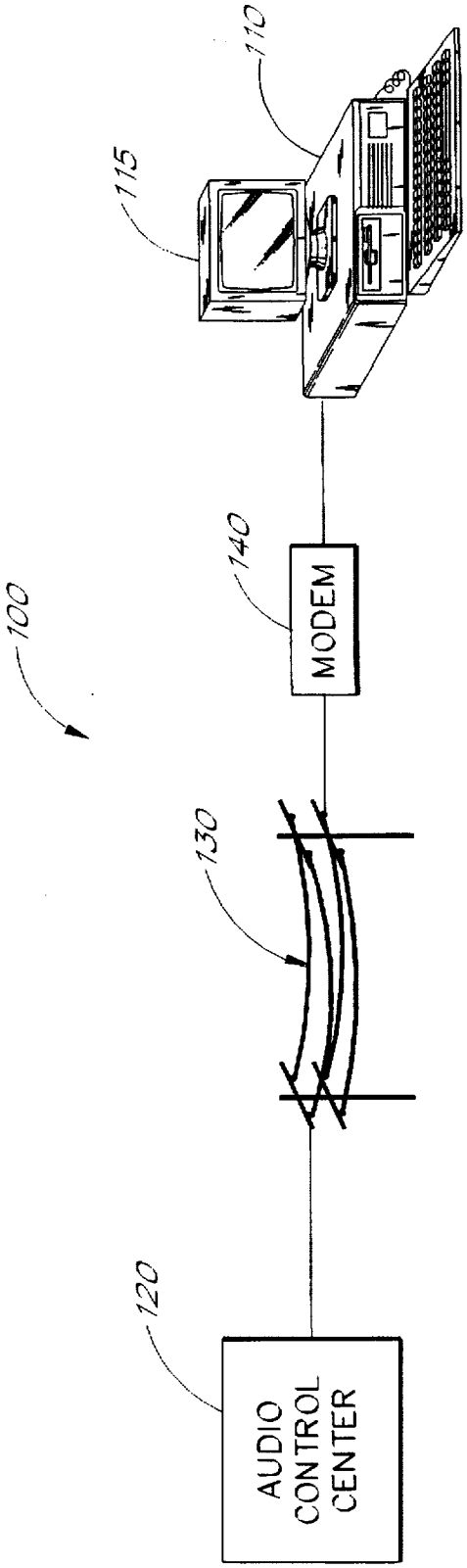

FIG. 1

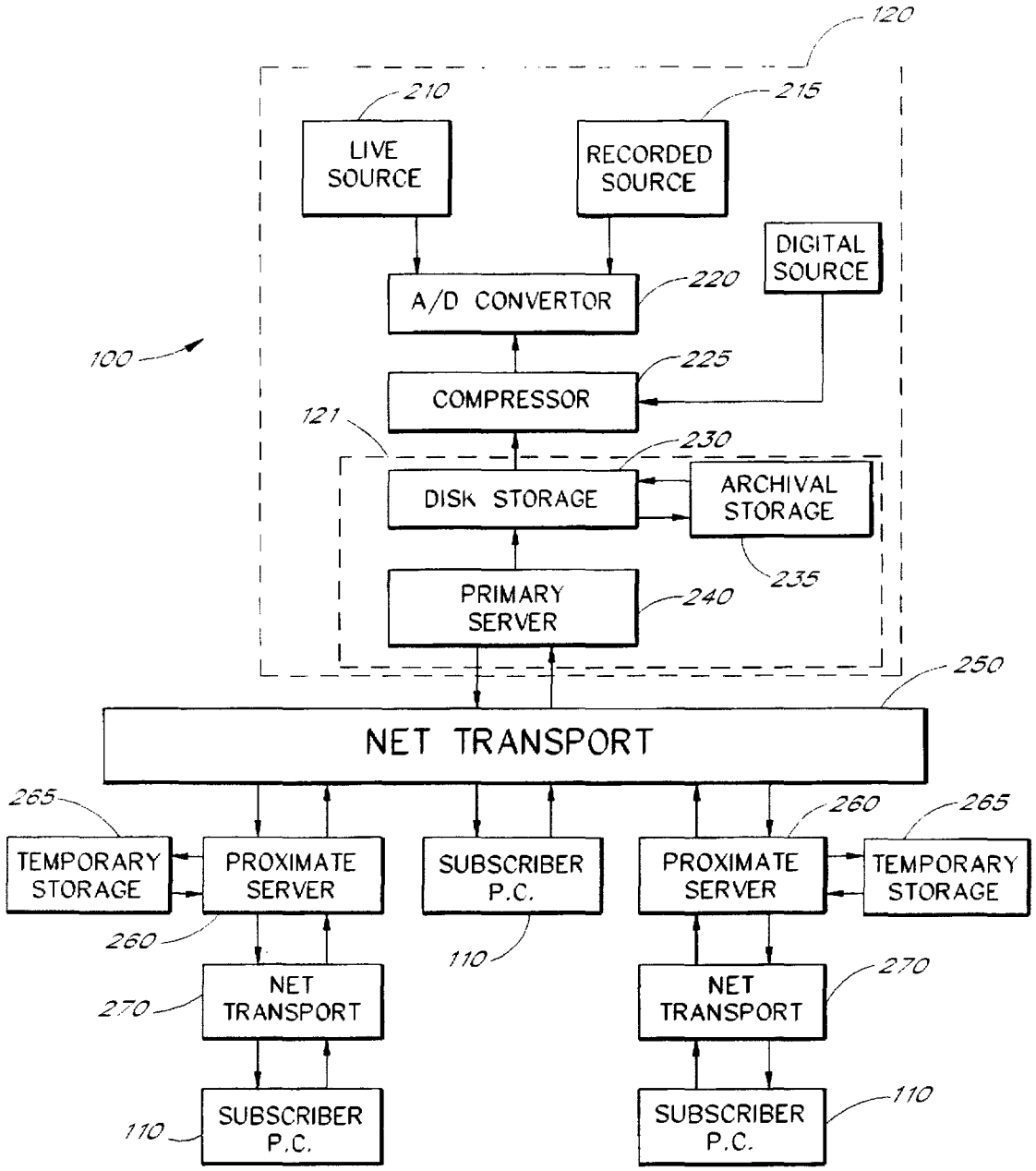
120
210
215
LIVE SOURCE
RECORDED SOURCE
DIGITAL SOURCE
A/D CONVERTOR
220
100
225
COMPRESSOR
121
230
DISK STORAGE
ARCHIVAL STORAGE
235
PRIMARY SERVER
240
250
NET TRANSPORT
265
260
265
TEMPORARY STORAGE
PROXIMATE SERVER
SUBSCRIBER P.C.
PROXIMATE SERVER
TEMPORARY STORAGE
260
110
270
NET TRANSPORT
NET TRANSPORT
270
110
SUBSCRIBER P.C.
SUBSCRIBER P.C.
110

FIG. 2A

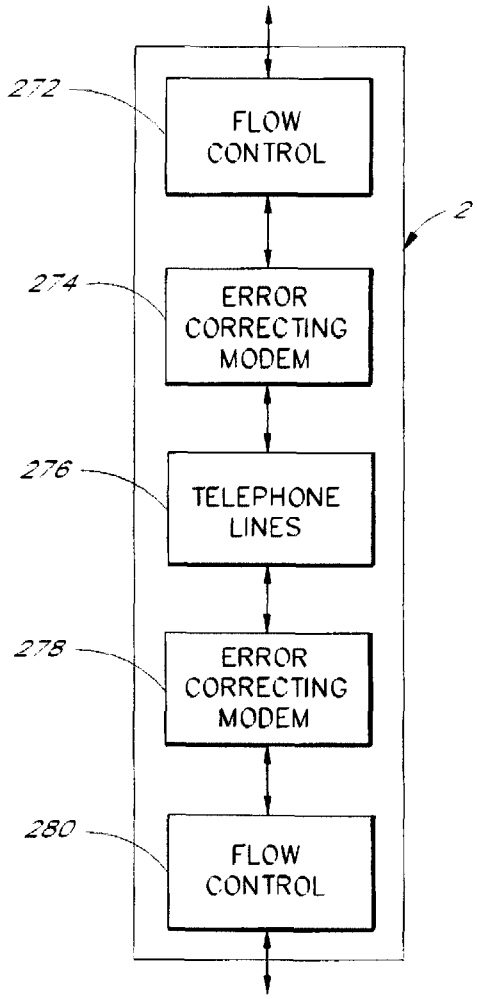

FIG. 2B

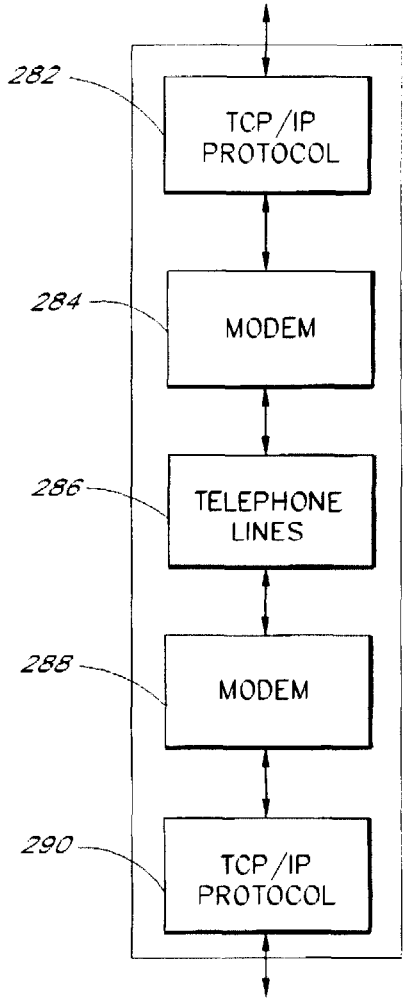

FIG. 2C

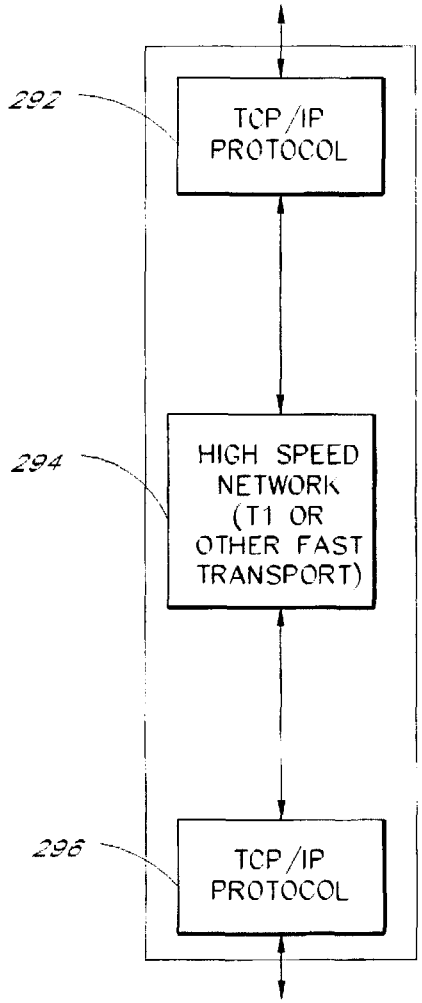

FIG. 2D

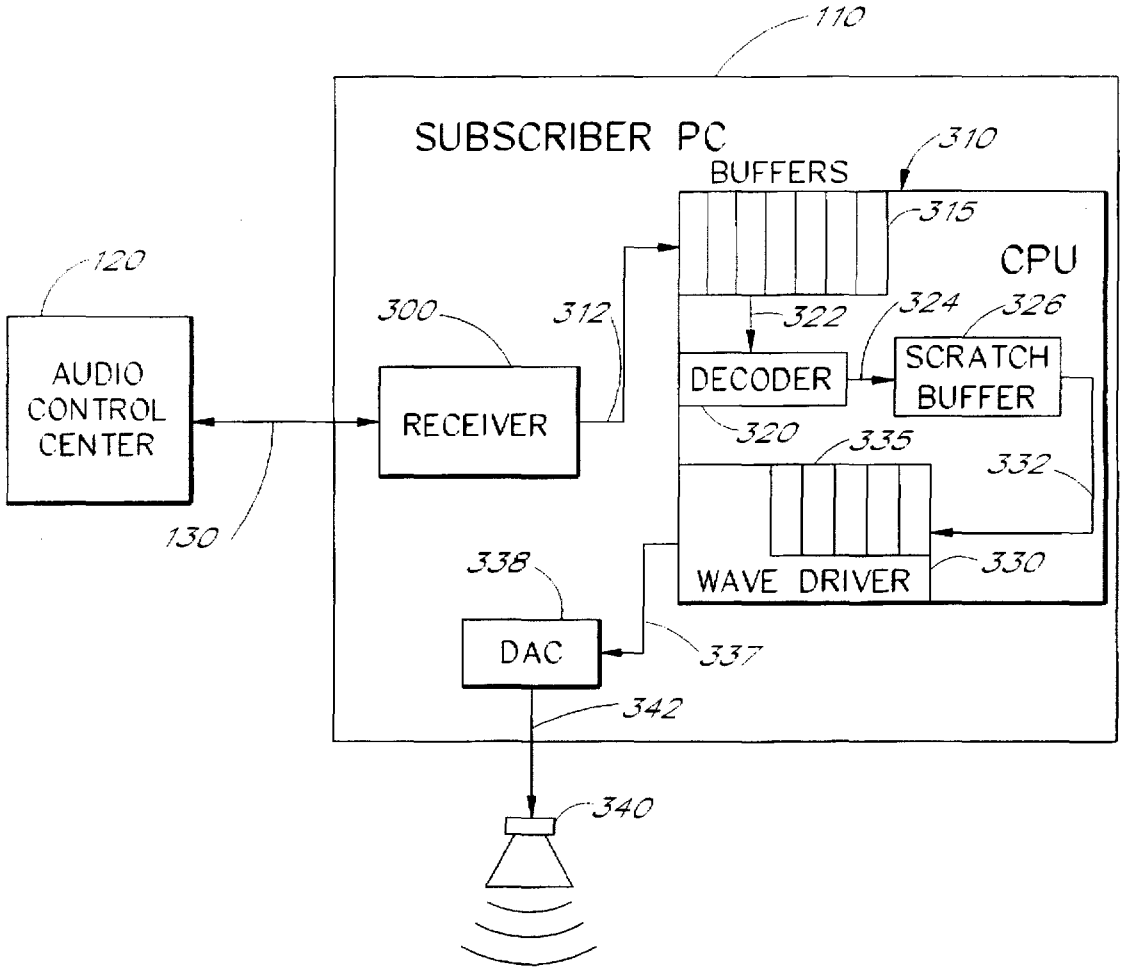
110
SUBSCRIBER PC
310
BUFFERS
315
CPU
120
300
312
322
324
326
AUDIO CONTROL CENTER
RECEIVER
DECODER
SCRATCH BUFFER
320
335
332
130
338
WAVE DRIVER
330
DAC
337
342
340

FIG. 3

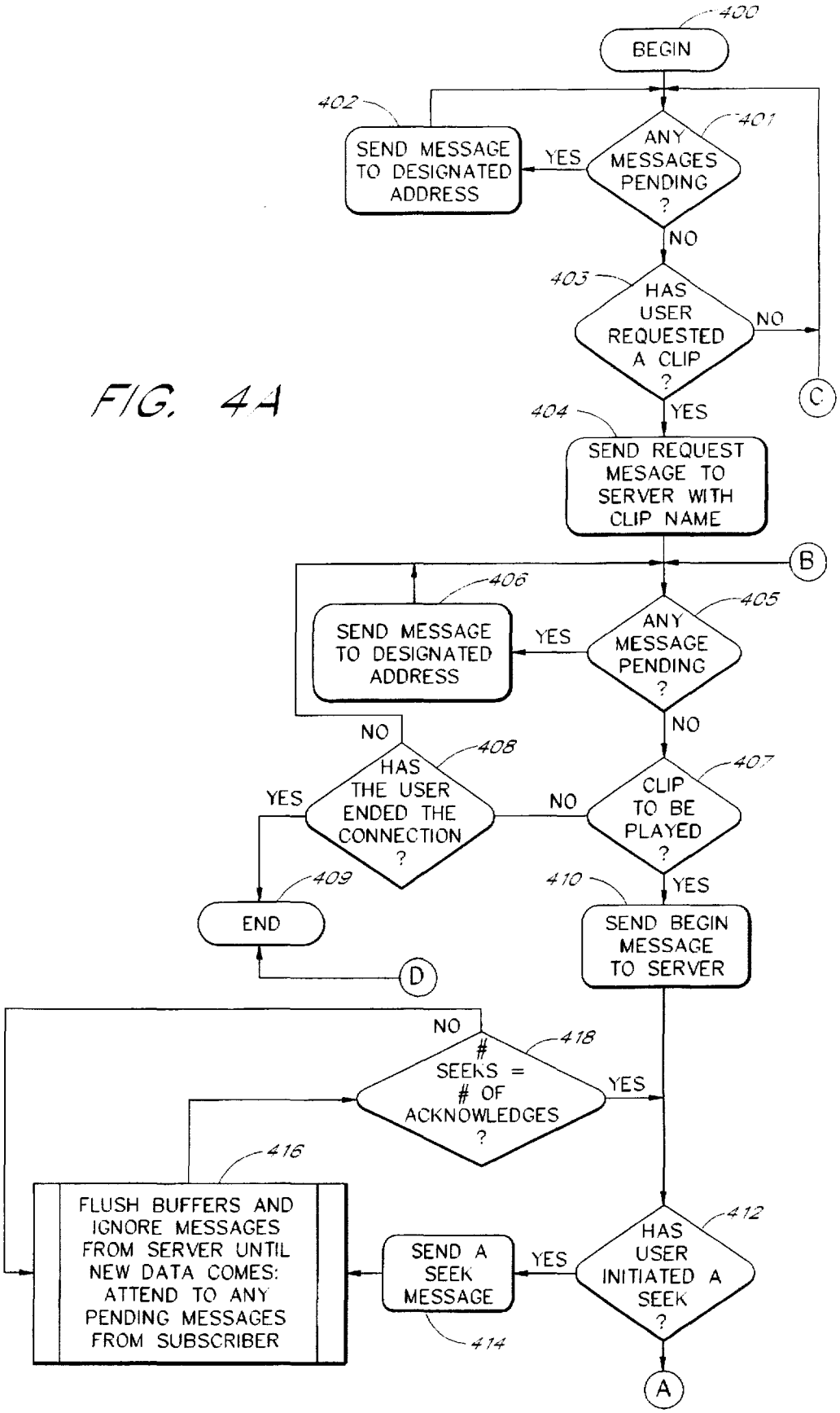
400
BEGIN
401
ANY MESSAGES PENDING ?
YES
402
SEND MESSAGE TO DESIGNATED ADDRESS
NO
403
HAS USER REQUESTED A CLIP ?
NO
C
YES
404
SEND REQUEST MESAGE TO SERVER WITH CLIP NAME
B
405
ANY MESSAGE PENDING ?
YES
406
SEND MESSAGE TO DESIGNATED ADDRESS
NO
407
CLIP TO BE PLAYED ?
NO
408
HAS THE USER ENDED THE CONNECTION ?
YES
409
END
D
YES
410
SEND BEGIN MESSAGE TO SERVER
412
HAS USER INITIATED A SEEK ?
YES
414
SEND A SEEK MESSAGE
416
FLUSH BUFFERS AND IGNORE MESSAGES FROM SERVER UNTIL NEW DATA COMES: ATTEND TO ANY PENDING MESSAGES FROM SUBSCRIBER
418
SEEKS = # OF ACKNOWLEDGES ?
NO
YES
A

FIG. 4A

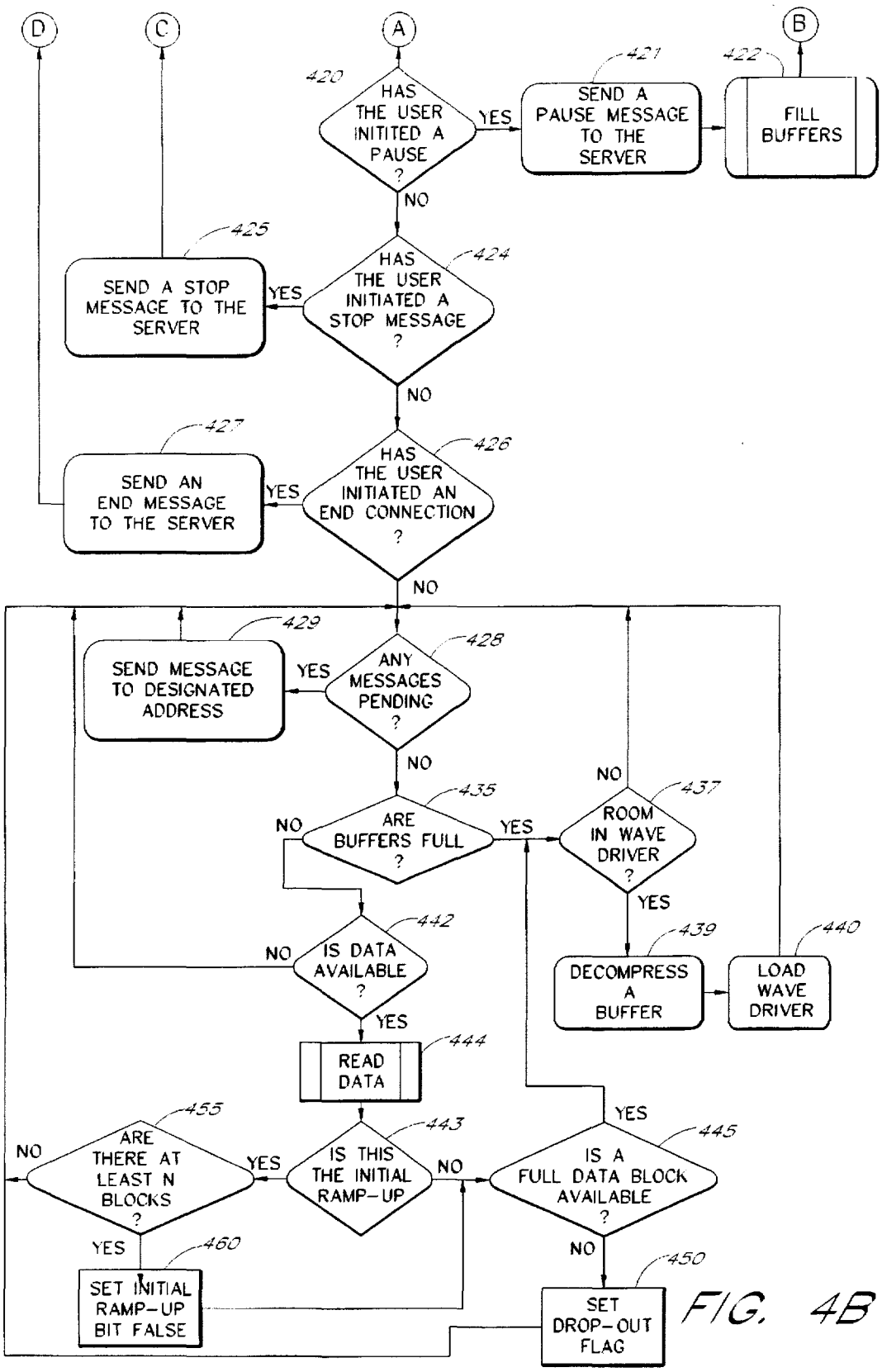
D
C
A
B
420
HAS THE USER INITITED A PAUSE ?
YES
NO
421
SEND A PAUSE MESSAGE TO THE SERVER
422
FILL BUFFERS
424
HAS THE USER INITIATED A STOP MESSAGE ?
YES
NO
425
SEND A STOP MESSAGE TO THE SERVER
426
HAS THE USER INITIATED AN END CONNECTION ?
YES
NO
427
SEND AN END MESSAGE TO THE SERVER
428
ANY MESSAGES PENDING ?
YES
NO
429
SEND MESSAGE TO DESIGNATED ADDRESS
435
ARE BUFFERS FULL ?
NO
YES
437
ROOM IN WAVE DRIVER ?
NO
YES
439
DECOMPRESS A BUFFER
440
LOAD WAVE DRIVER
442
IS DATA AVAILABLE ?
NO
YES
444
READ DATA
443
IS THIS THE INITIAL RAMP-UP
YES
NO
445
IS A FULL DATA BLOCK AVAILABLE ?
YES
NO
455
ARE THERE AT LEAST N BLOCKS ?
NO
YES
460
SET INITIAL RAMP-UP BIT FALSE
450
SET DROP-OUT FLAG

FIG. 4B

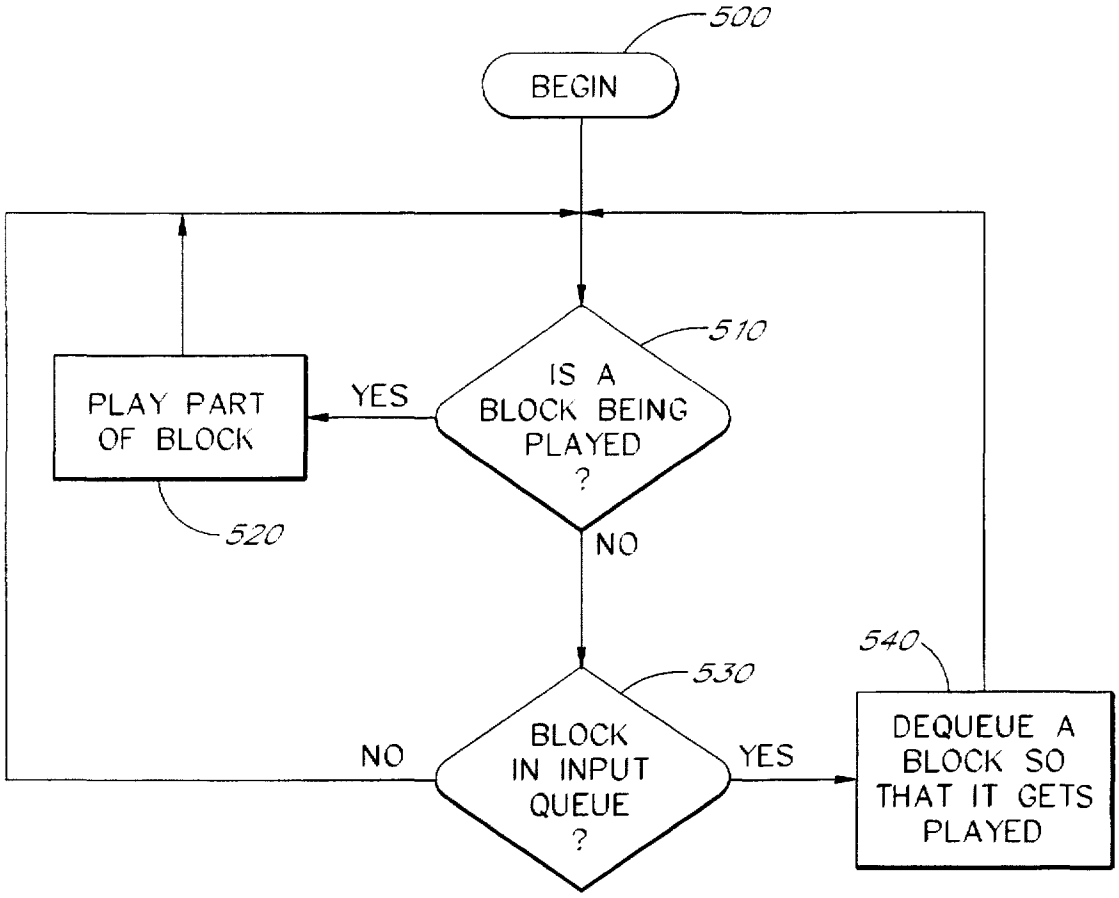
500
BEGIN
510
IS A BLOCK BEING PLAYED ?
YES
PLAY PART OF BLOCK
520
NO
530
BLOCK IN INPUT QUEUE ?
NO
YES
540
DEQUEUE A BLOCK SO THAT IT GETS PLAYED

FIG. 5

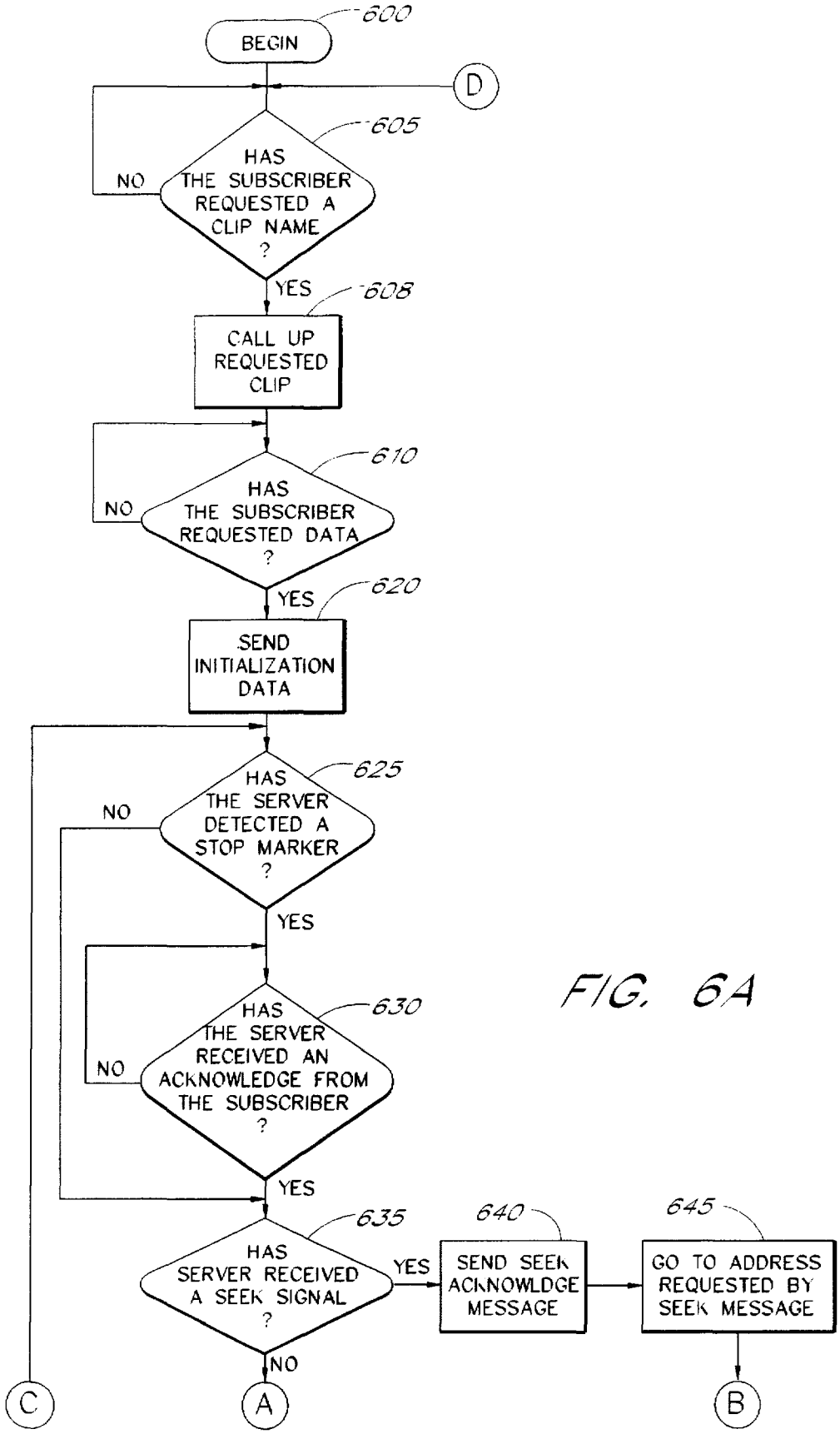
600
BEGIN
D
605
HAS THE SUBSCRIBER REQUESTED A CLIP NAME ?
NO
YES
608
CALL UP REQUESTED CLIP
610
HAS THE SUBSCRIBER REQUESTED DATA ?
NO
YES
620
SEND INITIALIZATION DATA
625
HAS THE SERVER DETECTED A STOP MARKER ?
NO
YES
630
HAS THE SERVER RECEIVED AN ACKNOWLEDGE FROM THE SUBSCRIBER ?
NO
YES
635
HAS SERVER RECEIVED A SEEK SIGNAL ?
YES
NO
640
SEND SEEK ACKNOWLDGE MESSAGE
645
GO TO ADDRESS REQUESTED BY SEEK MESSAGE
C
A
B

FIG. 6A

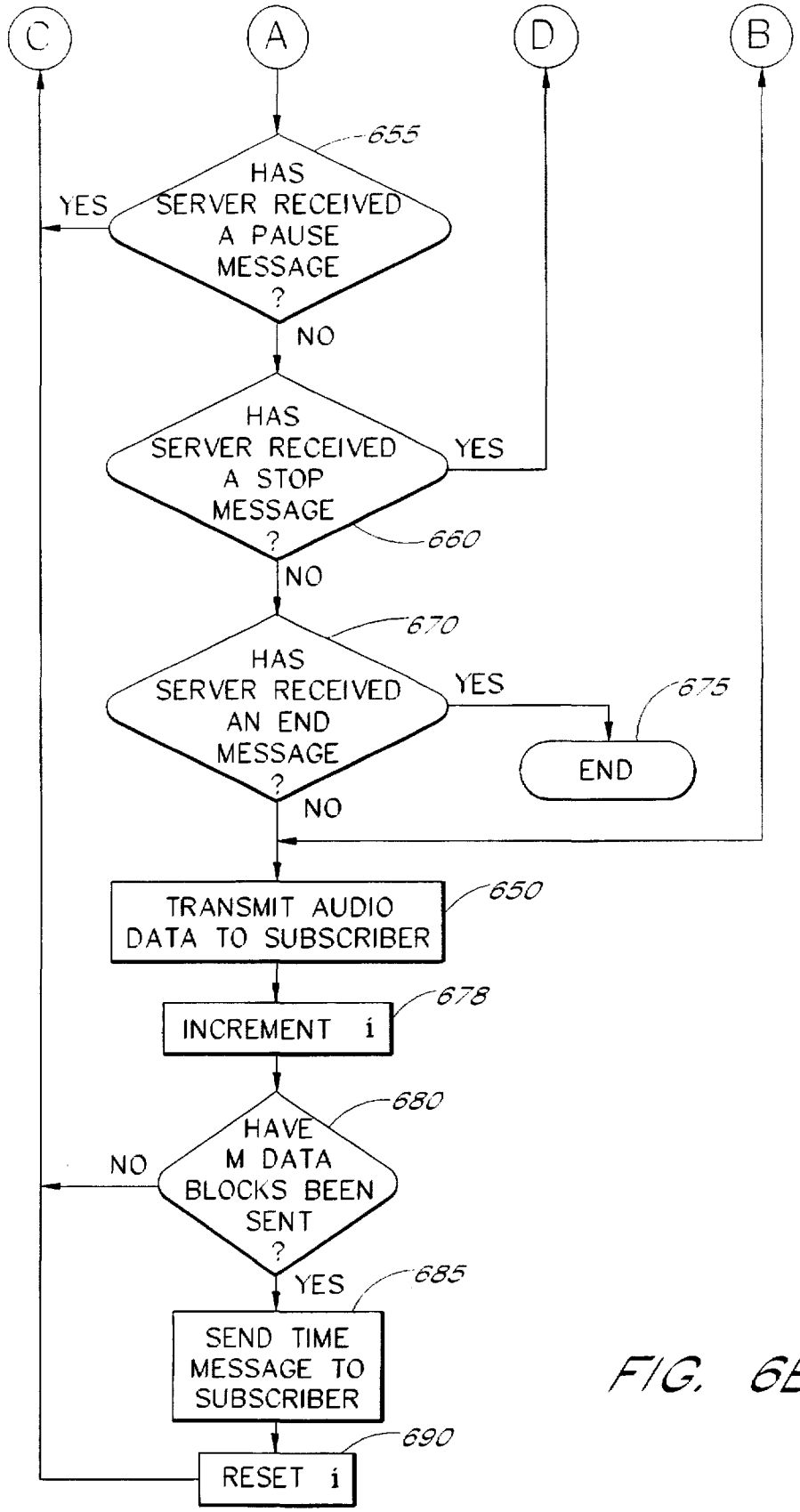
C
A
D
B
655
HAS SERVER RECEIVED A PAUSE MESSAGE ?
YES
NO
HAS SERVER RECEIVED A STOP MESSAGE ?
YES
660
NO
670
HAS SERVER RECEIVED AN END MESSAGE ?
YES
675
END
NO
TRANSMIT AUDIO DATA TO SUBSCRIBER
650
INCREMENT i
678
680
HAVE M DATA BLOCKS BEEN SENT ?
NO
YES
685
SEND TIME MESSAGE TO SUBSCRIBER
690
RESET i

FIG. 6B

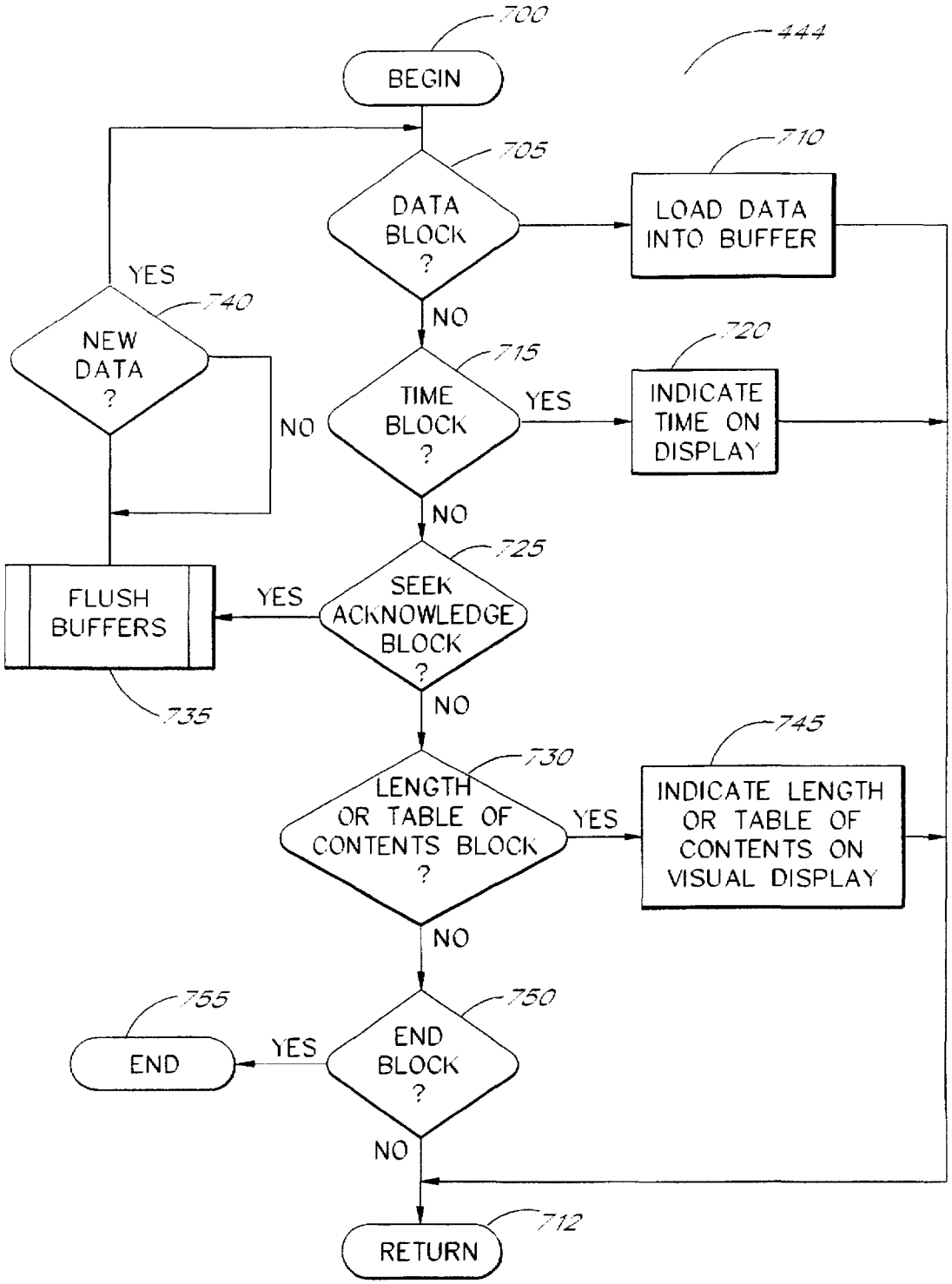
700
444
BEGIN
705
DATA BLOCK ?
710
LOAD DATA INTO BUFFER
YES
740
NEW DATA ?
NO
715
TIME BLOCK ?
YES
720
INDICATE TIME ON DISPLAY
NO
725
SEEK ACKNOWLEDGE BLOCK ?
YES
FLUSH BUFFERS
735
NO
730
LENGTH OR TABLE OF CONTENTS BLOCK ?
YES
745
INDICATE LENGTH OR TABLE OF CONTENTS ON VISUAL DISPLAY
NO
755
END
YES
750
END BLOCK ?
NO
712
RETURN

FIG. 7

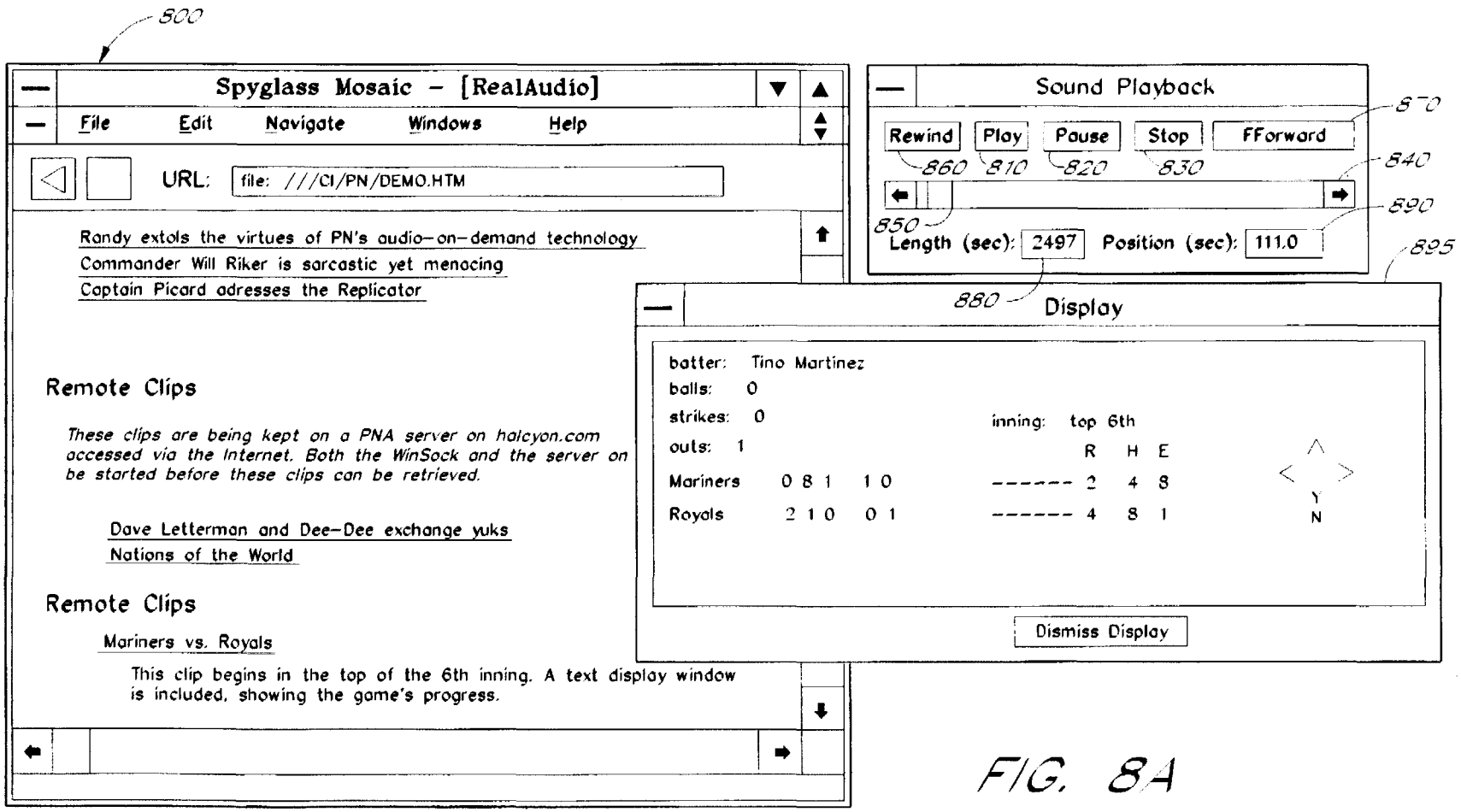
800
Spyglass Mosaic - [RealAudio]
File Edit Navigate Windows Help
URL: file: ///CI/PN/DEMO.HTM
Randy extols the virtues of PN's audio-on-demand technology
Commander Will Riker is sarcastic yet menacing
Captain Picard adresses the Replicator
Remote Clips
These clips are being kept on a PNA server on halcyon.com accessed via the Internet. Both the WinSock and the server on be started before these clips can be retrieved.
Dave Letterman and Dee-Dee exchange yuks
Nations of the World
Remote Clips
Mariners vs. Royals
This clip begins in the top of the 6th inning. A text display window is included, showing the game's progress.
Sound Playback
Rewind
Play
Pause
Stop
FForward
860
810
820
830
840
870
850
890
Length (sec): 2497
Position (sec): 111.0
895
880
Display
batter: Tino Martinez
balls: 0
strikes: 0
outs: 1
inning: top 6th
R H E
Mariners 0 8 1 1 0 ------ 2 4 8
Royals 2 1 0 0 1 ------ 4 8 1
Y
N
Dismiss Display

FIG. 8A

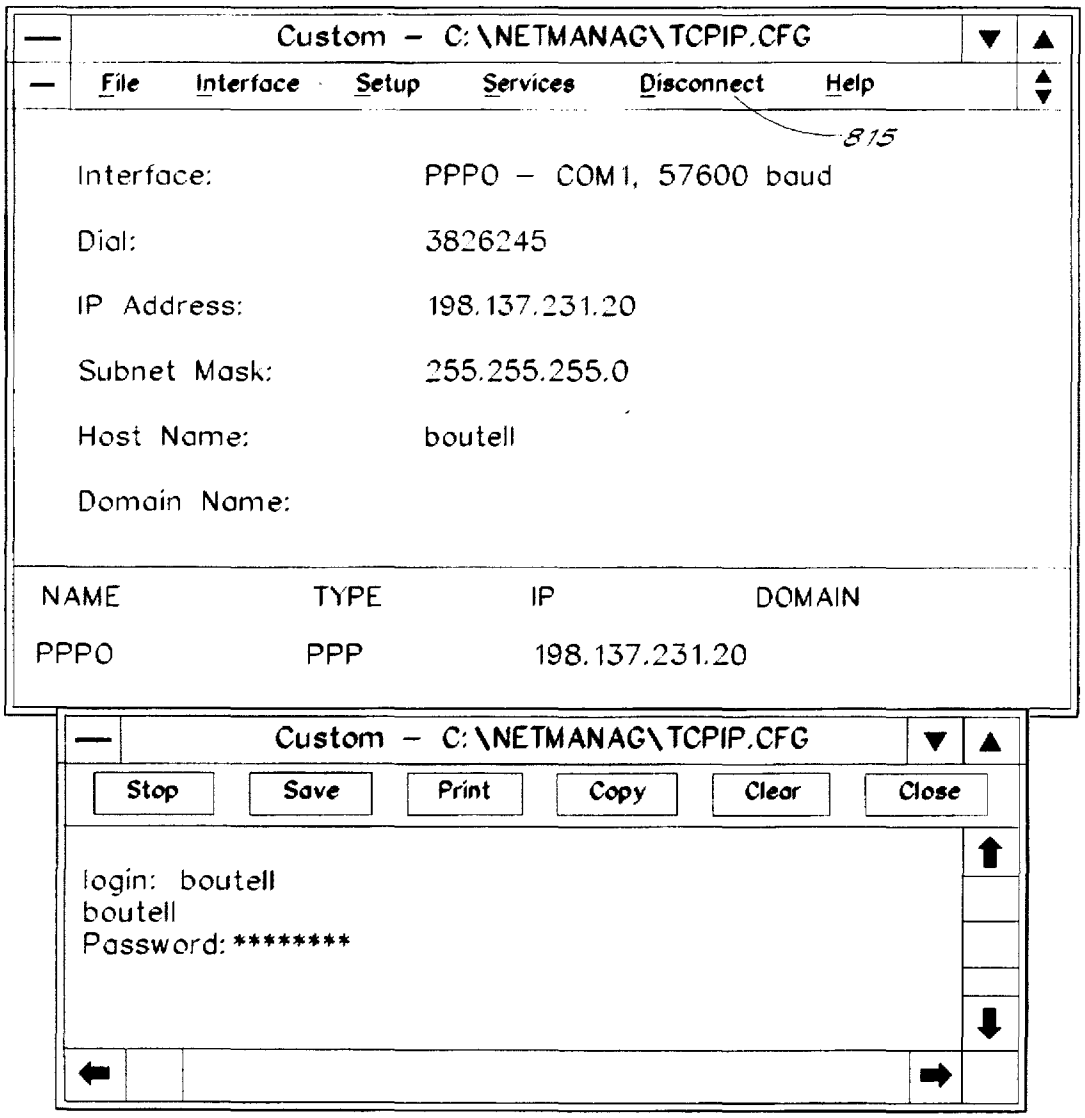
Custom – C:\NETMANAG\TCPIP.CFG
File
Interface
Setup
Services
Disconnect
Help
815
Interface: PPP0 – COM1, 57600 baud
Dial: 3826245
IP Address: 198.137.231.20
Subnet Mask: 255.255.255.0
Host Name: boutell
Domain Name:
NAME TYPE IP DOMAIN
PPP0 PPP 198.137.231.20
Custom – C:\NETMANAG\TCPIP.CFG
Stop
Save
Print
Copy
Clear
Close
login: boutell
boutell
Password: ********

FIG. 8B

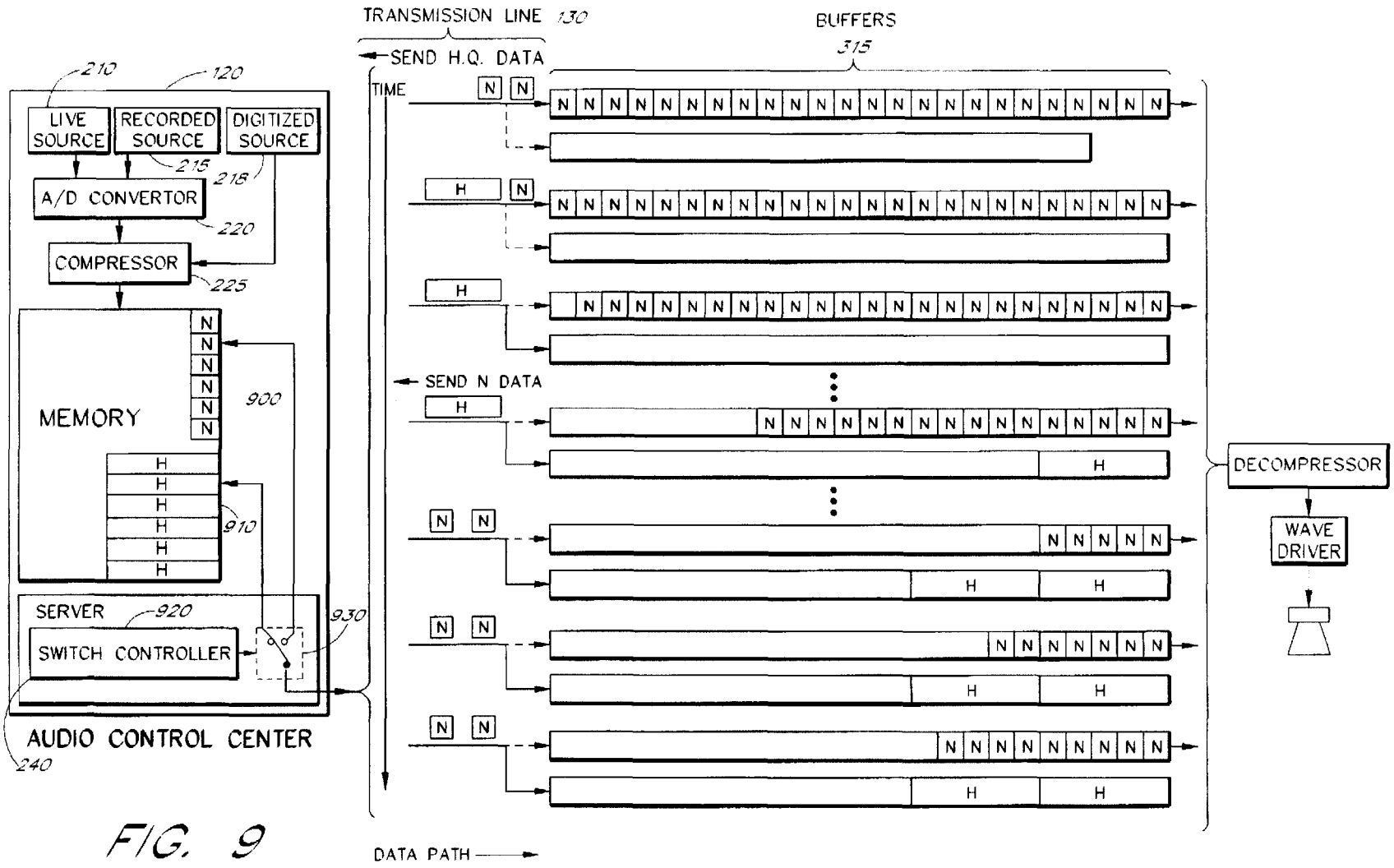
TRANSMISSION LINE 130
BUFFERS
315
SEND H.Q. DATA
TIME
210
120
LIVE SOURCE
RECORDED SOURCE
DIGITIZED SOURCE
215
218
A/D CONVERTOR
220
COMPRESSOR
225
MEMORY
900
910
SERVER
920
930
SWITCH CONTROLLER
AUDIO CONTROL CENTER
240
SEND N DATA
DECOMPRESSOR
WAVE DRIVER
DATA PATH

FIG. 9

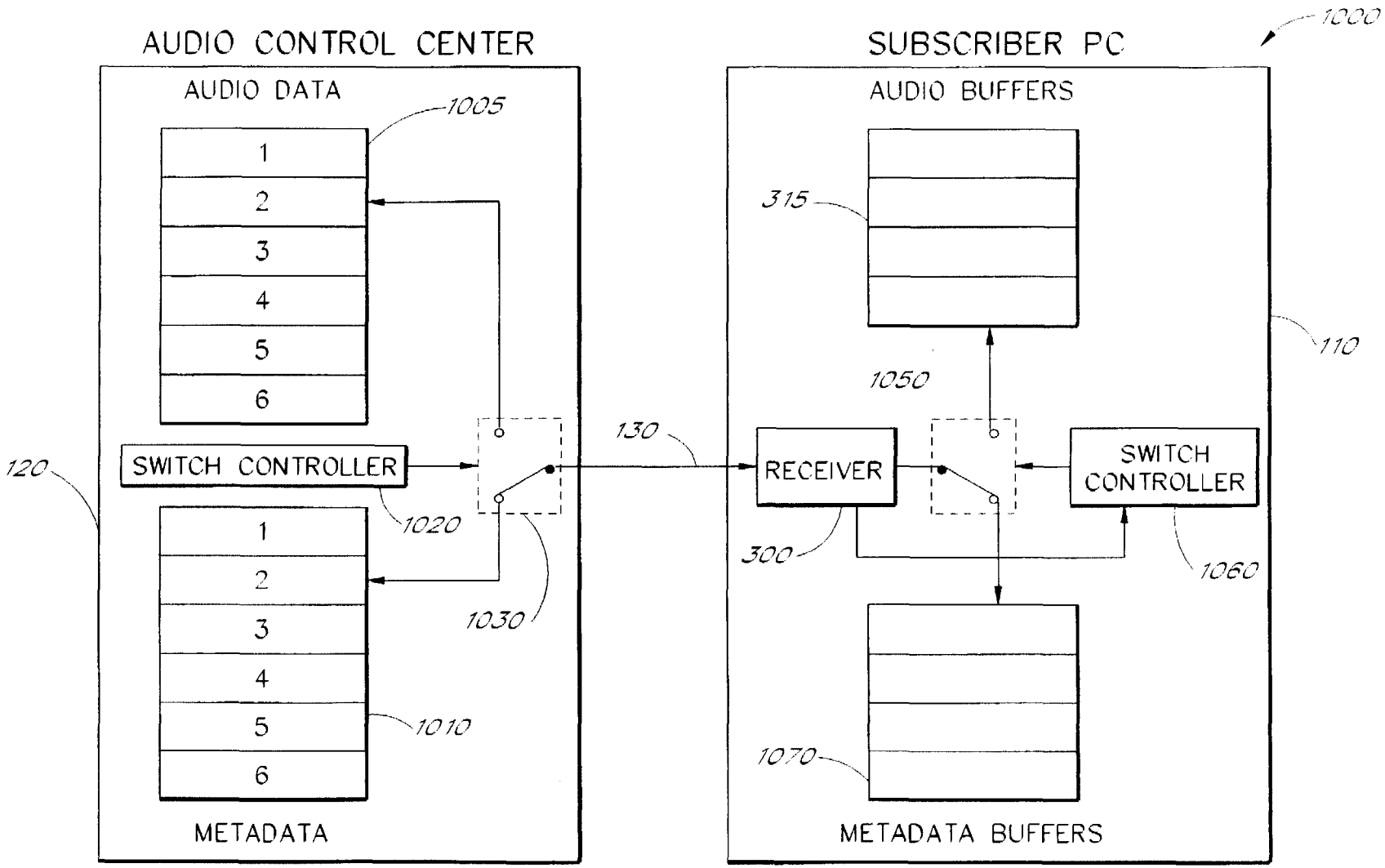
AUDIO CONTROL CENTER
AUDIO DATA
1005
1
2
3
4
5
6
SWITCH CONTROLLER
1020
120
1
2
3
4
5
6
1010
1030
METADATA
130
SUBSCRIBER PC
1000
AUDIO BUFFERS
315
110
1050
RECEIVER
SWITCH CONTROLLER
300
1060
1070
METADATA BUFFERS

FIG. 10

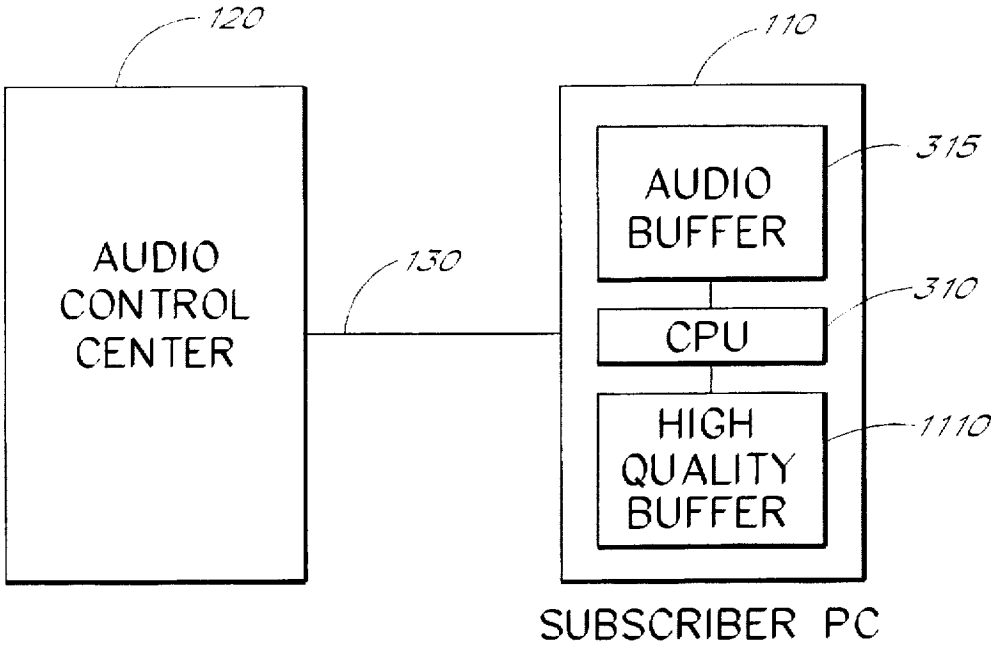
120
110
AUDIO CONTROL CENTER
130
AUDIO BUFFER
315
CPU
310
HIGH QUALITY BUFFER
1110
SUBSCRIBER PC

FIG. 11

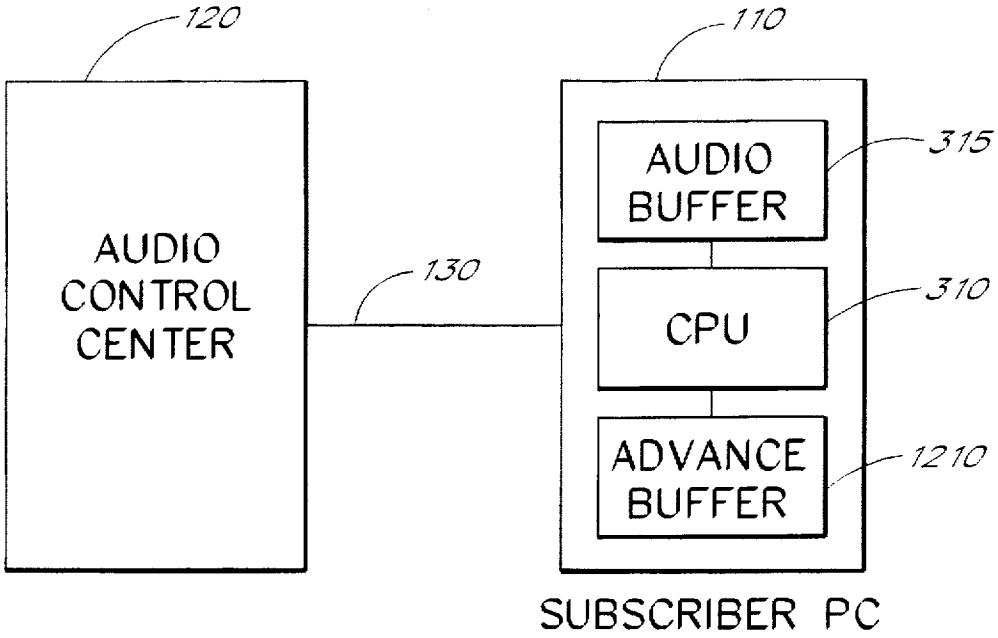
120
110
AUDIO CONTROL CENTER
130
AUDIO BUFFER
315
CPU
310
ADVANCE BUFFER
1210
SUBSCRIBER PC

FIG. 12

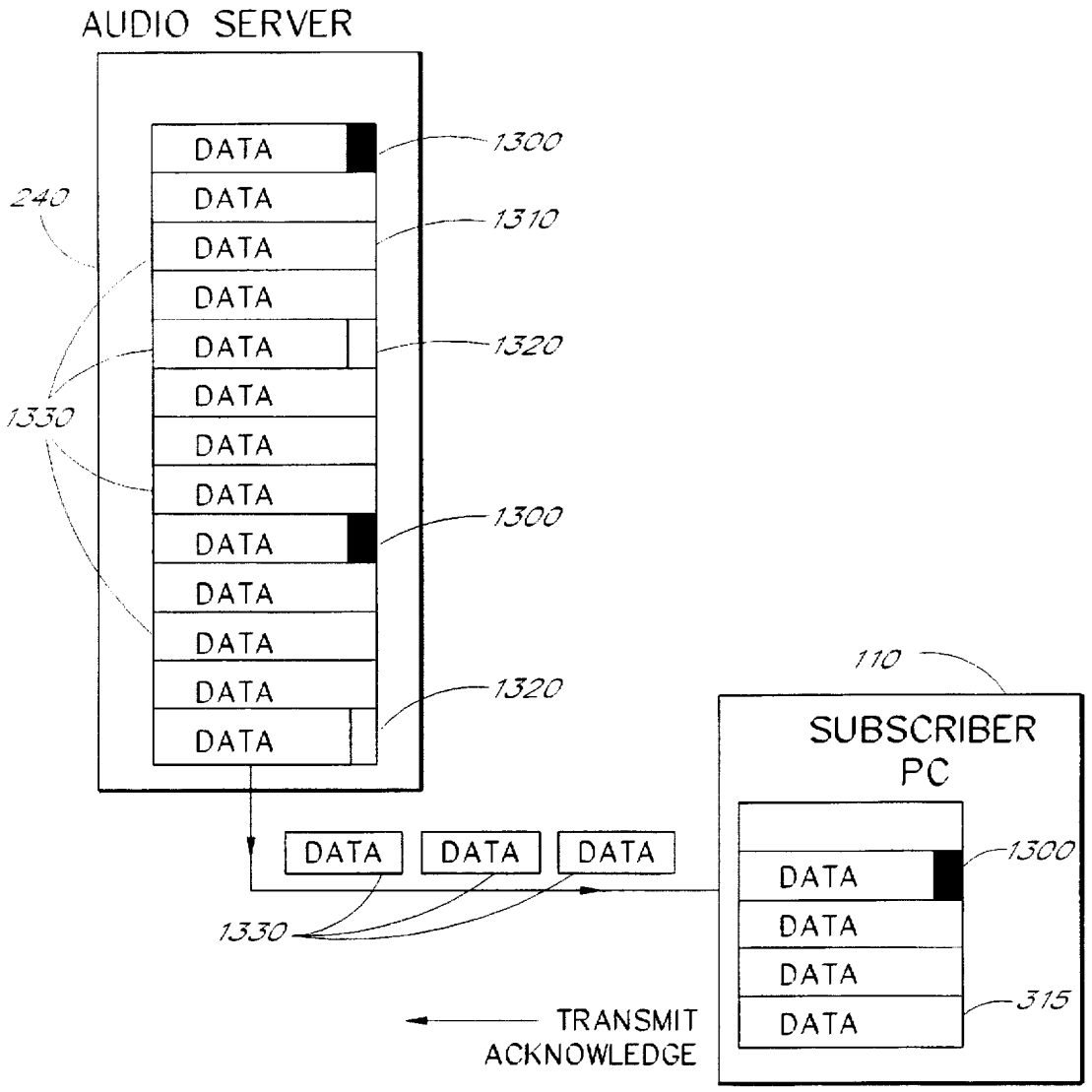
AUDIO SERVER
DATA
1300
1310
1320
240
1330
110
SUBSCRIBER PC
315
TRANSMIT ACKNOWLEDGE

FIG. 13

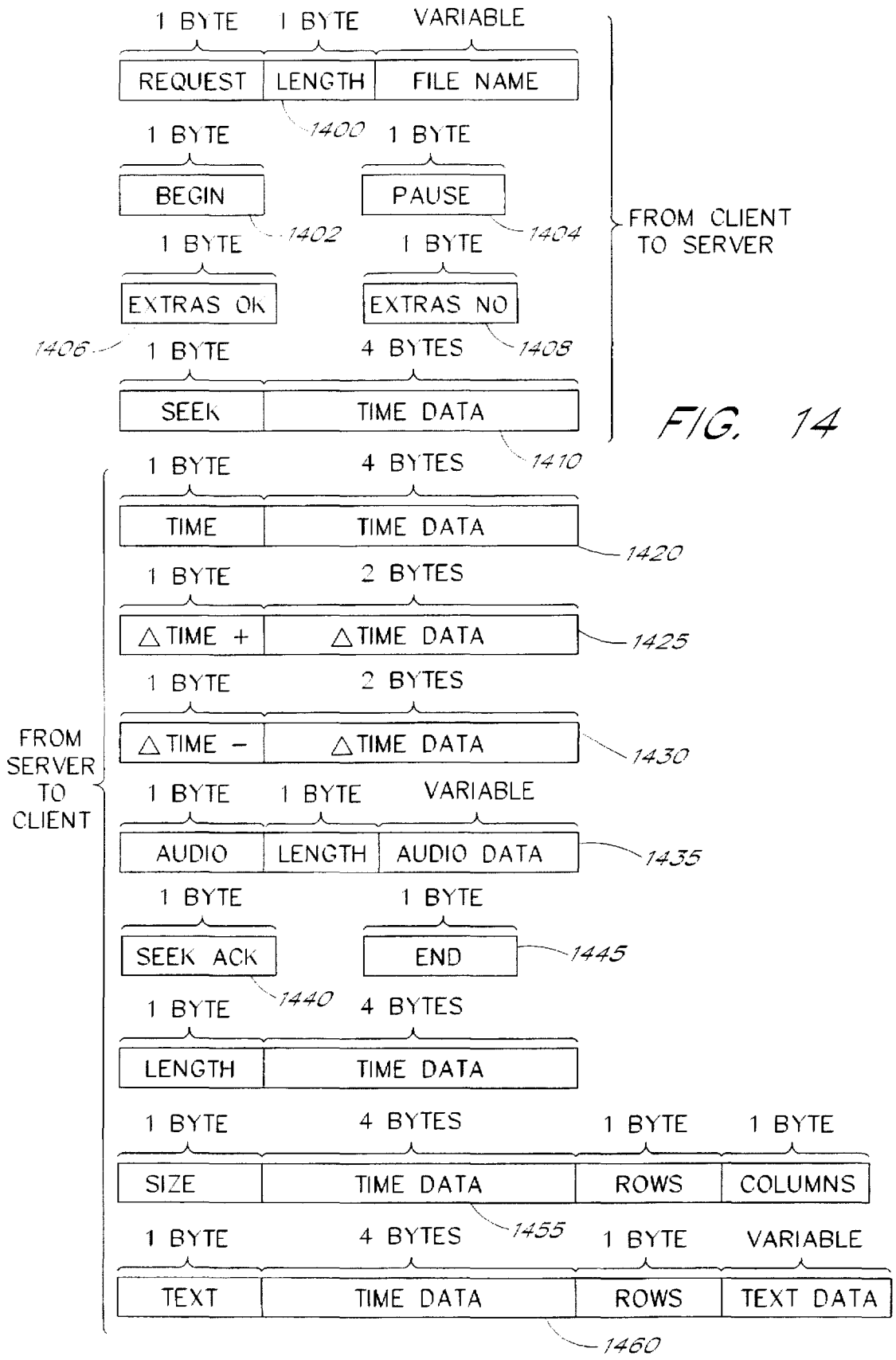
1 BYTE
1 BYTE
VARIABLE
REQUEST
LENGTH
FILE NAME
1400
1 BYTE
1 BYTE
BEGIN
PAUSE
1402
1404
1 BYTE
1 BYTE
EXTRAS OK
EXTRAS NO
1406
1408
1 BYTE
4 BYTES
SEEK
TIME DATA
1410
FROM CLIENT TO SERVER
1 BYTE
4 BYTES
TIME
TIME DATA
1420
1 BYTE
2 BYTES
△TIME +
△TIME DATA
1425
1 BYTE
2 BYTES
△TIME −
△TIME DATA
1430
FROM SERVER TO CLIENT
1 BYTE
1 BYTE
VARIABLE
AUDIO
LENGTH
AUDIO DATA
1435
1 BYTE
1 BYTE
SEEK ACK
END
1440
1445
1 BYTE
4 BYTES
LENGTH
TIME DATA
1 BYTE
4 BYTES
1 BYTE
1 BYTE
SIZE
TIME DATA
ROWS
COLUMNS
1455
1 BYTE
4 BYTES
1 BYTE
VARIABLE
TEXT
TIME DATA
ROWS
TEXT DATA
1460

FIG. 14

AUDIO-ON-DEMAND COMMUNICATION SYSTEM

BACKGROUND OF THE INVENTION

1. Field of the Invention

The present invention relates to multimedia computer communication systems and, in particular, to communication systems which provide Audio-On-Demand services.

2. Description of the Related Art

In recent years, the computer industry has observed an increasing demand for versatility in the personal computer market. The average consumer is less interested in high computer performance such as increased memory and clock rates than in the everyday usefulness of a personal computer system. For example, parents may be interested in educational computer programs for their children which instruct using both visual and audio media. As a result, there has been an increasing demand for personal computers and computer networks which have multimedia capabilities.

Among the most desirable multimedia capabilities are those associated with the transmission of audio information. A number of uses have been contemplated for transmission of audio information. For example, a user may want access to music or news, or may want to have a book read to them over their computer. Also, transmission of audio data provides much needed access to valuable information for visually impaired persons. Such multimedia communication systems which provide subscribers with selectable audio information are commonly called audio-on-demand systems.

U.S. Pat. No. 5,132,992 issued to Yurt, et al., discloses an audio and video transmission and receiving system. The audio and video-on-demand system disclosed by Yurt, et al., distributes video and/or audio information to multiple subscriber units from a central source material library. Digital signal processing is used to compress data within the source material library so that such data can be transmitted over standard communication links such as a cable or satellite broadcast channel, or a standard telephone line to a receiver specified by subscriber service. The receiver subscriber unit includes a decompressor for decompressing data sent from the source materials library and playing back the decompressed data by means of an audio or visual display.

Although known audio-on-demand communication systems offer many significant benefits, such systems are still subject to a number of significant limitations. For instance, significant difficulties are encountered when attempting to provide real time audio playback over narrowband communication links such as a standard telephone line.

SUMMARY OF THE INVENTION

The present invention provides a real-time, audio-on-demand system which may be implemented using only the processing capabilities of the CPU within a conventional personal computer. As detailed above, a number of significant difficulties arise when attempting to provide real-time audio-on-demand. It has been found that these difficulties are exacerbated when the subscriber receiving unit is a conventional personal computer having an Intel 486 microprocessor, or processors of equivalent power, as a central processing unit. Of course, higher power processors could be used, but such systems would become prohibitively expensive and would not be available to the mainstream personal computer user. In order to compensate for lack of processing power, special hardware or other additional capabilities would be needed. The system of the present invention overcomes these difficulties so that real-time audio-on-demand is available to the average consumer on an unmodified personal computer.

In order to overcome the aforementioned difficulties, the system of the present invention employs an audio compression algorithm which provides audio compression on the order of 22:1. As is well known in the art, audio data in digitized format requires large amounts of memory space. It has been found that, in order to transmit digitized audio data so that a high quality audio signal is generated in real time, a data rate on the order of 22 kilobytes per second is typically necessary. However, current data rates achievable by most average cost modems on a reliable basis, fall in the range of 1.8 kilobytes (14.4 kilobits) per second. Consequently, the real-time, audio-on-demand system of the present invention provides a form of audio compression which allows digitized audio data to be transmitted over a conventional 14.4 kilobits per second modem connection. For purposes of practical implementation, it is preferable to use less than the maximum possible modem bandwidth when transmitting data. It has been found that very good performance can be obtained if the data transmission rate is about 1 kilobyte per second. Assuming a required data rate of 22 kilobytes per second and a transmission bandwidth of approximately 1 kilobyte per second, an audio compression of approximately 22 to 1 is required. Audio compression algorithms which may be used in accordance with the teachings of the present invention to provide audio compression on the order of 22:1 are well known in the art. The EIA/TIA IS-54 standard, which is herein incorporated by reference, discloses an algorithm description such that one of ordinary skill in the art could implement a compression algorithm suitable for use in the present invention. Advantageously, a preferred embodiment of the algorithm employs an adaptation of the IS-54 VSELP cellular compression algorithm compatible with the IS-54 VSELP cellular compression algorithm availiable from MOTOROLA. Of course, it should be understood that in order to facilitate the compression and transmission of digitized audio data, it may be advantageous to convert the compression algorithm from hexadecimal to binary (i.e., from ASCII data format to binary data format). Another preferred embodiment of the invention utilizes the code excited linear predication (CELP) coder, version 3.2, available from NTIS, U.S. Department of Commerce, 5285 Port Royal Rd., Springfield, Va., 22161 (telephone number 703-487-4650). Another preferred embodiment implements the well known GSM coding algorithm available through the European standards committee. Yet another preferred implementation uses a LPC-10 based coder described in a publication entitled "*Digital Processing of Speech Signals*," by L. R. Rabiner and R. W. Schafer, published by Prentice Hall, 1978. The aforementioned public documents are herein incorporated by reference.

Although the required data rates are achievable by means of the improved audio compression algorithm described above, certain difficulties are still inherent in a system which provides real time audio-on-demand without specialized software. Further difficulties are encountered in computer systems which run high power applications programs such as computer systems which run in a MICROSOFT WINDOWS environment. Specifically, it is still necessary to decompress and translate the audio data received into a format compatible with WINDOWS. This poses particular problems since a WINDOWS environment typically requires a great deal of processing power so that much of a CPU's time is spent in supporting the WINDOWS software.

To overcome this difficulty, the system of the present invention continually monitors requests issued by application programs which run concurrently with the audio-on-demand system of the present invention. In this manner, requests issued by the applications programs are processed rather than ignored in the system of the present invention.

Furthermore, data buffers of reasonable size should be allocated within the dynamic random access memory (DRAM) of a conventional 486 Intel based personal computer in order to avoid deleterious effects on computer performance. Thus, typically, buffer memories are allocated within the DRAM to have on the order of approximately 16 or 32 kilobytes of storage. If digitized audio data is transmitted and received within the data buffer at too fast a rate, the buffers would overflow causing the loss of significant portions of data and audio dropout. As is well known in the art, audio dropout is a phenomena wherein audio playback terminates for some noticeable time period and then resumes after this delay. On the other hand, if data was transmitted too slowly, then the buffers would empty out again resulting in significant dropout and degradation of audio quality. Thus, a number of significant difficulties are encountered when attempting to implement a real time audio-on-demand system within a 486 CPU based personal computer system, or other similar personal computer systems. Thus, the present invention provides a method of monitoring and regulating the flow of data between the server and the subscriber unit which insures that the buffers are constantly maintained at or near maximum capacity.

In a further aspect of the invention, audio quality degradation may be compensated for through the data flow regulation of the present invention. This flow regulation constantly maintains the buffers at or near maximum capacity so that, in the event of a delay in the communication link, the subscriber unit can continue to play back audio already stored in the buffers until new audio data begins to arrive again. Also, the present invention employs a method of transmitting high quality audio data compressed using a lossless compression algorithm or a compression algorithm having a compression ratio which requires transmission at a rate greater than real time, at selected intervals so that brief passages of higher quality audio signals are produced at playback. In one embodiment, the user may select when a high quality passage is to be sent so that important pieces of audio data are played back clearly.

In another aspect of the invention increased control over received audio data is provided for by transmitting selected significant portions of an audio clip being transmitted in anticipation that the user may desire to move immediately to a new position in the audio clip.

In addition, versatility is added to the audio-on-demand system of the present invention by transmission of limited extra data, or "metadata," interleaved with the transmitted audio data. The metadata may include text, captions, still image data, high quality audio data, etc., and includes information so as to allow the subscriber to synchronize the metadata with significant events in the audio data. The metadata is correlated with the audio data to provide a combined audio and visual experience.

Furthermore, the present invention advantageously provides dynamic allocation of server/subscriber pairs to insure the best possible quality of communication links between the server and the subscriber.

BRIEF DESCRIPTION OF THE DRAWINGS

FIG. 1 shows a simplified schematic block diagram of an audio-on-demand system constructed in accordance with the present invention.

FIG. 2A is a more detailed schematic block diagram showing the main functional elements of the audio-on-demand system of the present invention.

FIGS. 2B–2D are schematic block diagrams showing the main functional elements of alternate embodiments of the net transports depicted in FIG. 2A.

FIG. 3 is a schematic block diagram showing the main functional elements of a receiving subscriber audio unit such as a subscriber personal computer.

FIGS. 4A and 4B together depict a control flow diagram showing the general method employed by the audio-on-demand system of the present invention to provide real time audio decoding within the CPU of the receiver subscriber audio unit.

FIG. 5 is a subcontrol flow diagram showing the general operation of the wave driver of FIG. 3.

FIGS. 6A and 6B together depict the general flow of control employed within the audio server of the present invention.

FIG. 7 depicts a control flow diagram which details the method employed within the read data subroutine block of FIG. 4B.

FIG. 8A depicts the various displays observed on the video screen of the subscriber personal computer as the user selects an audio clip to be played from a menu, and selects various options while the audio clip is being played.

FIG. 8B depicts the various displays observed on the video screen of the subscriber personal computer as the user dials the server, logs into the server system, and initiates a disconnect.

FIG. 9 is a schematic representation of an exemplary data transaction between a server and a subscriber unit which illustrates method used in the high quality transmission mode of the present invention.

FIG. 10 is a simplified block diagram which depicts the main functional elements of an audio-on-demand system that provides real-time playback of audio data in addition to metadata which can be displayed in synchronism with corresponding audio data.

FIG. 11 is a simplified block diagram which depicts the main functional elements of an audio-on-demand system that provides audio playback of selected portions of high quality audio data in real-time.

FIG. 12 is a simplified block diagram which depicts the main functional elements of an audio-on-demand system that provides a table of contents indicating significant divisions within a requested audio clip, and which provides for immediate playback of audio data at the divisions specified in the table of contents.

FIG. 13 is a schematic representation of the method used in accordance with the present invention to manage the flow of data blocks from the server to the subscriber PC.

FIG. 14 illustrates the data structures of various data messages transmitted between the server and the subscriber PC in accordance with the teachings of the present invention.

DETAILED DESCRIPTION OF THE PREFERRED EMBODIMENT

FIG. 1 shows a simplified schematic block diagram of an "audio-on-demand" system constructed in accordance with the present invention. The system **100** comprises a subscriber personal computer (PC) **110** (e.g., an IBM PC having a 486 Intel Microprocessor), having a video display **115**. The

subscriber PC **110** connects to an audio control center **120** over telephone lines **130** via a modem **140**.

In operation, a user calls the audio control center **120** by means of the modem **140**. The audio control center **120** transmits a menu of possible selections over the telephone lines **130** to the personal computer **110** for display on the video display **115**. The user may then select one of the available options displayed on the video display **115** of the computer **110**. For example, the user may opt to listen to a song or hear a book read. Once the audio data has been transmitted, the modem **140** disconnects from the audio control center **120**.

FIGS. 2A–2D and FIG. 3 are schematic block diagrams which show, in greater detail, the main functional elements of the audio-on-demand system **100** of the present invention which provides a real time audio-on-demand system in conjunction with the subscriber PC **110** which comprises a standard microprocessor based personal computer system. In the context of the present invention, the term "standard" personal computer system should be understood to mean that the system includes a microprocessor of equivalent or greater processing power than an INTEL 486 microprocessor (although not necessarily compatible with an INTEL 486 microprocessor), a random access memory (RAM), an internal or external modem which transmits data in the approximate range of 9.6 Kbps to 14.4 Kbps, and some kind of sound card or sound chip which serves as a digital-to-analog convertor. Such a system is advantageously capable of running MICROSOFT WINDOWS software. Of course, it should be understood that a "standard" personal computer system should not be simply understood to be an IBM compatible computer. In practice any kind of workstation or personal computing system (e.g., a SUN MICROSYSTEMS workstation, an APPLE computer, a laptop computer, etc.) which includes the above described features may be understood to be broadly encompassed under the expression "standard" computer system.

A more detailed block diagram of the audio-on-demand system **100** of the present invention is depicted in FIG. 2A. The audio control center **120** is shown in FIG. 2A to comprise a live audio source **210** and a recorded audio source **215**. In one embodiment, the live audio source may simply comprise a person talking into a microphone or some other source of live audio data like a baseball game, while the recorded audio source **215** may comprise a tape recorder, a compact disk, or any other source of recorded audio information. Both the live audio source **210** and the recorded audio source **215** serve as inputs to an analog-to-digital converter **220**. The analog-to-digital converter **220** may, in one embodiment, comprise a Roland® RAP **10** analog-to-digital converter available with the Roland® audio production card. The analog-to-digital converter **220** provides inputs to a digital compressor **225**. Of course, it should be understood that some audio data input into the audio control center **120** may already be in digital form, as represented by a digitized audio source **218**, and, therefore, may be input directly into the digital compressor **225**. The digital compressor **225** compresses the digitized audio data provided by the analog-to-digital converter **220** in accordance with the IS-54 standard compression algorithm. The compressor **225** provides inputs to a disk storage unit **230**, which in turn communicates with an archival storage unit **235** via a bidirectional communication link. Finally, the disk storage unit **230** communicates with a primary server **240**, which may, in one embodiment, advantageously comprise a UNIX server class work station such as those produced by SUN Microsystems. The disk storage unit **230**, together with the archival storage unit **235** and the primary server **240** comprise an audio servicer **121**, as indicated by a dashed box.

The audio control center **120** may communicate bidirectionally with a plurality of subscriber PCs **110** or a plurality of proximate servers **260** via a net transport **250**. Each of the proximate servers **260** communicate with temporary storage units **265** via a bidirectional communication link. Finally, each of the proximate servers **260** communicate with subscriber PCs **110** via net transport communication links **270**.

In operation, the analog-to-digital converter **220** receives either live or recorded audio data from the live source **210** or the recorded source **215**, respectively. The analog-to-digital converter **220** then converts the received audio data into digital format and inputs the digitized audio data into the compressor **225**. The compressor **225** then compresses the received audio data with a compression ratio of approximately 22:1 in one embodiment in accordance with the specifications of the IS-54 compression algorithm. The compressed audio data is then passed from the compressor **225** to the disk storage unit **230** and, in turn, to the archival storage unit **235**. The disk storage unit **230**, together with the archival storage unit **235**, serve as audio libraries which can be accessed by the primary server **240**. In one preferred embodiment, the disk storage unit **230** contains audio clips and other audio data which is expected to be referenced with high frequency, while the archival storage contains audio clips and other audio information which is expected to be referenced with lower frequency. The primary server **240** may also dynamically allocate the audio information stored within the disk storage unit **230**, as well as the audio information stored within the archival storage unit **235**, based upon a statistical analysis of the requested audio clips and other audio information. The primary server **240** responds to requests received by the multiple subscriber PCs **110** and the proximate servers **260** via the net transport **250**. The operation of the primary server **240** as well as the proximate servers **260** will be described in greater detail below with reference to FIGS. 6A and 6B.

As will be described in greater detail below, the proximate servers **260** may be dynamically allocated to serve local subscriber PCs **110** based upon the geographic location of each of the subscribers accessing the audio-on-demand system **100**. This ensures that a higher quality connection can be made between the proximate server **260** and the subscriber PCs **110** via net transports **270**. Further, the temporary storage memory banks **265** of the proximate servers **260** are typically faster to access than the disk or archival storage **230**, **235** associated with the primary server **240**. Thus, the proximate servers **260** can typically provide faster access to requested audio clips.

FIGS. 2B–2D depict various implementations of the net transport **250**, **270**. As depicted in FIG. 2B, the net transport **250**, **270** comprises a flow controller **272**, which communicates bidirectionally with an error correcting modem **274**. The error correcting modem **274** communicates bidirectionally with an error correcting modem **278** via telephone lines **276**. Finally, the error correcting modem **278** communicates with a flow controller **280**.

In operation, the flow controllers **272**, **280** are used to regulate the flow of data between the server (**240** or **260**) and the subscriber PC **110**. As described in greater detail below with reference to FIG. 6A, the flow controllers **272**, **280** may be implemented as software provided within the server (**240** or **260**) and subscriber PC **110**. The embodiment of the net transport **250** shown in FIG. 2B is typically used in applications where the flow of data is not automatically regulated in accordance with the parameters of the communication link.

FIG. 2C depicts an alternative embodiment of the net transport **250**, **270**. The alternative embodiment comprises a Transmission Control Protocol/Internet Protocol (TCP/IP) protocol **282**, which communicates bidirectionally with a modem **284**. The modem **284** communicates bidirectionally with a modem **288** via telephone lines **286**. Finally, the modem **288** communicates bidirectionally with a receiver and TCP/IP protocol **290**.

In operation, the TCP/IP protocol **282**, **290** is used to automatically regulate the flow of data between the server and the subscriber. In one embodiment, the TCP/IP protocol may be implemented as standard Chameleon software available from NETMANAGE, Inc. The embodiment of the net transport **270** depicted in FIG. 2C is typically used in applications involving an INTERNET link or other communication link where the flow of data is automatically regulated.

Finally, a further embodiment of the net transport **250**, **270** is depicted in FIG. 2D. In FIG. 2D, the net transport **270** comprises a TCP/IP protocol **292**, which communicates bidirectionally with a high-speed network **294**. The high-speed network, in one embodiment, may comprise a T1 land line link or other fast transport communication link. The high-speed network **294** communicates bidirectionally with a TCP/IP protocol **296**. The embodiment of the net transport **270** shown in FIG. 2D is typically used in applications involving an internet link or other communication link where the flow of data is automatically regulated.

FIG. **3** is a schematic block diagram showing the main functional elements within the receiving personal computer **110**. The telephone line **130** enters a receiver **300** which advantageously comprises an internal modem. Of course, it will be appreciated that if the receiver **300** is included internally within the subscriber PC **110** there is no need to include the modem **140** depicted in FIG. **1**. The receiver **300** connects to a CPU module **310** via a line **312**. As described herein, the CPU module **310** comprises a microprocessor such as an INTEL 486, as well as dynamic random access memory (DRAM) which may be allocated as buffer space. The CPU **310** is shown to include a buffer memory **315**. The buffer memory **315** may, in one embodiment, comprise a portion of the DRAM allocated at initialization of the audio-on-demand system **100**. The buffer **315** within the CPU **310** connects to a decoder **320** via a line **322**. The decoder **320** connects to a scratch buffer **326** (which advantageously comprises a portion of the DRAM associated with the CPU **310**) via a line **324**. The scratch buffer **326** connects to a wave driver **330** via a line **332**. The wave driver **330** is advantageously implemented as software provided by sound card vendors or provided by the MICROSOFT WINDOWS operating system run by the CPU **310**. The wave driver **330** also includes a buffer memory **335** which may comprise another portion of the DRAM allocated at initialization. The wave driver **330** connects to a digital-to-analog convertor (DAC) **338** via a line **337**. The DAC **338** advantageously is found on a SOUNDBLASTER sound board available from Creative Labs. The DAC **338** connects to an audio transducer **340**, which advantageously comprises a speaker, via a line **342**.

In general operation, the receiver **300** receives the transmitted data signals from the line **130** and demodulates these signals into digital data. The digital data is provided as inputs to the buffer's memory **315** within the CPU **310**. At intervals selected by the CPU **310**, the buffer **315** outputs the digitized audio data to the decoder **320** for decompression. The decoder **320** then passes the decompressed data to the scratch buffer **326**. The decompressed audio data is transmitted from the scratch buffer **326** to the buffer **335** of the wave driver **330**. The digital output of the wave driver **330** is converted to analog by the DAC **338**. The DAC **338** then outputs an electrical signal along the line **342** which causes the speaker **340** to produce audio.

FIGS. **4A** and **4B** together depict a control flow diagram which describes the flow of control between the CPU **310**, the decoder **320**, the buffer **315**, and the wave driver **330**. It should be understood that, in order not to obscure the inventive features of the present invention, the following description of the flow of control within the subscriber PC **110** is not an exhaustive account of all of the signals and control functions associated with the operation of the subscriber PC **110**. Thus, a number of conventional operations and signals which relate to the flow of control within the subscriber PC **110** and which are not essential for understanding the teachings of the present invention are not depicted in the flowchart of FIGS. **4A** and **4B** since these signals and operations are well known to those of ordinary skill in the art. Furthermore, in order to facilitate a clear understanding of the several features of the present invention, FIG. **14** depicts data structures for each of the messages used to communicate between the server **240** and the subscriber PC **110**.

As shown in FIG. **14**, messages sent from the subscriber PC **110** to the server include a REQUEST message **1400**, a BEGIN message **1402**, a PAUSE message **1404**, an EXTRAS OK message **1406**, an EXTRAS NO message **1408**, and a SEEK message **1410**. Each of the messages include a one-byte identification field which indicates what type of message is being sent. Some of the messages include a further multiple-byte field containing other information. Specifically, the REQUEST message **1400** includes a one-byte identification field, a one-byte length field, and a multiple-byte name field, having the same number of bytes as indicated in the length field, for storing the name of the requested file. The SEEK message **1410** includes a one-byte identification field and a four-byte time data field. The above described messages will be described in greater detail with reference to the subscriber PC control flow diagram of FIGS. **4A** and **4B**, as well as FIG. **7**, below.

Messages which are transmitted from the server to the subscriber PC **110** include a TIME message **1420**, positive and negative ΔTIME messages **1425**, **1430**, an AUDIO DATA message **1435**, a SEEK ACKNOWLEDGE message **1440**, an STOP message **1445**, a LENGTH message **1450**, a SIZE message **1455**, and a TEXT message **1460**. Each of the messages include a one-byte identification field which indicates what type of message is being sent. Some of the messages include a further multiple-byte field containing other information. Specifically, the TIME message **1420** includes a one-byte identification field and a four-byte time data field. The ΔTIME messages **1425**, **1430** each include a one-byte identification field and a two-byte delta time field. The AUDIO DATA message includes a one-byte identification field, a one byte length field, and a multiple-byte data field, having the same number of bytes as indicated in the length field, and containing audio data. The LENGTH message includes a one-byte identification field and a four-byte time data field. The SIZE message includes a one-byte identification field as well as a four-byte time field, a one-byte rows field, and a one-byte columns field. The TEXT message includes a one-byte identification field as well as a four-byte time data field, a one-byte length field, and a variable length text data field. The above described messages will be described in greater detail with reference to the server control flow diagram of FIGS. **6A** and **6B**, as well as FIGS. **8–13**, below.

As depicted in FIG. 4A, from a begin or startup block **400**, control passes to a decision block **401** which determines if any messages are pending within the PC **110**. In a typical WINDOWS environment, the CPU **310** must process and respond to a number of pending messages while also supporting the reception, control, and decompression of audio data when an audio clip is playing. The decision block **401** insures that proper processing time is devoted to the currently running applications program. Thus, if the decision block **401** determines that a message is pending, control passes to an activity block **402** wherein the pending messages are sent to their designated addresses. The process then re-enters the decision block **401**.

Once it is determined within the decision block **401** that there are no pending messages, control passes from the decision block **401** to a decision block **403**, wherein the subscriber PC **110** determines whether or not the user has requested a specific audio clip. In order to request an audio clip, the user typically selects the audio clip from a menu of audio clips displayed on the video display terminal **115** of the subscriber PC **110**. FIG. 8A depicts a video display such as a user might observe when selecting an audio clip from a menu **800** of audio clips in accordance with the teachings of the present invention. To select the clip from the menu **800**, the user simply directs the mouse pointer over the title of the desired audio clip on the menu and clicks the mouse button once. In other cases, the user may opt to type in the name of an audio clip which the user wishes to be played. Once the user has requested a clip, the subscriber PC **110** transmits a request message to the server **240** which indicates the name of the clip which is to be played. In another embodiment, the request message may also include an address at which the requested audio clip may be located within the server memory bank **230** (see FIG. 2). This operation is represented within the activity block **404**. As will be described below with reference to FIG. 6A, the server **240** accesses the requested clip upon reception of the request message from the subscriber PC **110**.

Once the subscriber PC **110** has transmitted a request message to the server **240** within the activity block **404**, control passes to a decision block **405** wherein the subscriber PC **110** determines if there are any pending messages from the currently running applications program. If the subscriber PC **110** determines that there is a message pending, then control passes to an activity block **406** wherein the message is sent to the designated address. Control then returns to the decision block **405** to determine if more messages are pending. If there are no further pending messages, then control passes from the decision block **405** to a decision block **407**.

As indicated within the decision block **407**, the subscriber PC **110** determines whether or not the user has indicated that the selected audio clip is to be played. If the subscriber PC **110** determines that the user has indicated that the clip is to be played (e.g., by clicking the appropriate mouse button on a "play" field **810** shown in FIG. 8A), then control passes to an activity block **410**, wherein a begin message is sent to the server **240**. If the user has not yet indicated that the selected audio clip is to be played, then control instead passes to a delay loop including a decision block **408**. The decision block **408** determines whether or not the user has ended the connection while the subscriber PC **110** is waiting for the user to indicate that the selected clip is to be played. If it is determined that the user has ended the connection with the server **240** (e.g., by clicking a mouse button over a "disconnect" field **815** displayed in FIG. 8B), then control passes to an end block **409** and the process is terminated. However, if the user has not ended the connection with the server **240**, control passes to the decision block **405** where the subscriber PC **110** again determines if there are any pending messages.

In one embodiment, the user need not initiate playing of the audio clip. Rather, the begin signal is simply transmitted automatically (i.e., control passes directly from the activity block **404** to the activity block **410**). As will be described in greater detail below with reference to FIGS. 6A and 6B, upon reception of a begin signal from the subscriber PC **110**, the server **240** initiates data transmission of the requested audio clip to the subscriber PC **110**.

Once a begin message has been sent to the server **240**, control passes from the activity block **410** to a decision block **412**. Within the decision block **412**, the subscriber PC **110** determines if the user has initiated a seek operation. As illustrated in FIG. 8A, the user may wish at any time within the playing of an audio clip to seek a particular location within the clip and begin playing the clip immediately from that location. It should be made clear here that the time elapsed within an audio clip is typically referred to as the "location" within the audio clip. To seek a particular location within the clip and begin playing the clip immediately from that location, the user need only place the mouse arrow over a box **850** within a play time bar **840** and click and hold. The user then moves the box **850** to another location along the play time bar **840** according to the commonly used "click and drag" method and releases the mouse button to release the box **850** and continue playing the audio clip from the time indicated by the play time bar **840**. Alternately, the same operation may be performed by clicking and holding the mouse button down while the mouse pointer is over rewind or fast forward fields **860**, **870**, respectively. Of course, it will be appreciated that the seek operation may also be accomplished by other methods as well. Thus, if it is determined within the decision block **412** that the user has initiated a seek, control passes to an activity block **414**, wherein a seek signal is sent to the server **240**. As will be discussed in greater detail below with reference to FIGS. 6A and 6B, when the server **240** receives a seek message from the subscriber PC **110**, the server **240** locates the position in the audio clip which is sought by the user and begins retransmitting from that position (Of course, it should be understood that the server **240** never interrupts transmission in the middle of an audio block, but rather interrupts transmission once the full block has been transmitted, in order to avoid protocol errors with the subscriber PC **110**). Thus, the SEEK message includes a time stamp (a four-byte time field) which indicates the amount of time, in tenths of a second, by which the audio clip is to be advanced or rewound to the place in the audio clip sought by the user. Of course, it should be understood that seeks performed according to this method are generally used in conjunction with audio clips stored within the memory of the audio control center **120** or local server, and cannot generally be performed with live audio sources, except to rewind to already heard material. Control then passes from the activity block **414** to a subroutine block **416**, wherein the subscriber PC **110** flushes the buffers **315** and ignores all messages other than seek acknowledges from the server **240** until the server **240** has acknowledged each seek message not yet acknowledged. Within the subroutine block **416**, the subscriber PC **110** also receives N blocks of new audio data within the buffer **315** before resuming playback to reduce the risk of dropout. Furthermore, within the subroutine block **416** the subscriber PC **110** determines if there are any pending messages from the background applications program and

attends to any of these messages to insure that the audio-on-demand system of the present invention does not inhibit the performance of the background applications program.

Control passes from the subroutine block **416** to a decision block **418** wherein the subscriber PC **110** determines if the number of seek messages sent by the subscriber PC **110** is equal to the number of seek acknowledge signals received from the server **240**. The subscriber PC **110** keeps track of the number of SEEK and seek acknowledge messages to prevent premature playback. Often, when a user indicates that the audio clip is to be played at a different place, the user may inadvertently select playback at several different places in the audio clip before the place which the user wants is actually found by the user. Thus, the subscriber PC **110** does not begin playback until an acknowledge message has been received for every seek message issued by the subscriber PC **110**. Once the number of seek acknowledge messages received from the server **240** is equal to the number of seek messages issued by the subscriber PC **110**, control returns to the decision block **412**. If it is determined within the decision block **412** that the user has not initiated a seek, then control passes immediately from the decision block **412** to a decision block **420** via a continuation point A.

Within the decision block **420**, the subscriber PC **110** determines if the user has initiated a pause. This can be done, for example, by clicking the mouse over a "pause" field **820** shown in FIG. 8A. Often times, the user will wish to pause the playing of the selected audio clip in order to attend to some other activity. Thus, the present invention allows the user to pause an audio clip in mid-stream and to resume playing the audio clip at the same point when the user indicates that the audio clip is no longer to be paused. If the subscriber PC **110** determines that the user has initiated a pause, then control passes from the decision block **420** to an activity block **421**, wherein a pause signal is sent to the server **240**. Control then passes from the activity block **421** to a subroutine block **422**, wherein the buffers **315** are filled. When the server **240** receives a pause signal from the subscriber PC **110**, the server **240** discontinues transmission of audio blocks until a begin message is received. It should be understood that the server **240** never interrupts transmission in the middle of an audio block. Control returns to the decision block **405** (via a continuation point B) to determine if there are any pending messages, and from the decision block **405** to the decision block **407** to determine if the user has indicated that the audio clip is to resume playing. However, if it was determined within the decision block **420** that the user did not initiate a pause, then control passes immediately from the decision block **420** to the decision block **424**.

Within the decision block **424**, the subscriber PC **110** determines if the user has initiated a stop message. This may be accomplished by clicking the mouse button over a "stop" field **830** displayed on the video screen **115** as shown in FIG. 8A. If the user has initiated a stop message, then this indicates that the user wishes to discontinue playing the selected audio clip altogether. Consequently, control passes to an activity block **425**, wherein a stop signal is sent to the server **240** from the subscriber PC **110**. Control then passes from the activity block **425** to the decision block **401** (FIG. 4A) via a continuation point C. If it is determined within the decision block **424**, however, that the user has not initiated a stop message, then control passes instead to a decision block **426**.

Within the decision block **426**, the subscriber PC **110** determines if the user has initiated an end connection message. This means that the user intends to disconnect with the server **240** and request no further audio clips. It should be noted that the end connection message is typically sent by the WINDOWS application program in accordance with conventional methods. In response, control passes from the decision block **426** to an activity block **427**, wherein the subscriber PC **110** sends an end signal to the server **240**. Control then passes from the activity block **427** to the end block **409** (FIG. 4A) via a continuation point D. If it is determined by the subscriber PC **110**, however, that the user has not initiated an end connection message, control passes instead from the decision block **426** to a decision block **428**.

Within the decision block **428**, the subscriber PC **110** determines if there are any pending messages. If the subscriber PC **110** determines that there are messages pending, then control passes to an activity block **429** wherein the pending message is sent to the designated address. Control then returns to the decision block **428** until there are no further messages pending, at which time control passes from the decision block **428** to a decision block **435**.

Within the decision block **435** the subscriber PC **110** determines if the buffers **315** are full. That is, if the buffers have enough room for the next series of data blocks to be transferred from the server **240**. If the buffers **315** are full, the subscriber PC **110** determines if there is memory storage space in the wave driver buffers **335**, as indicated within a decision block **437**. If there is no room in the wave driver buffer **335**, this indicates that further data output to the wave driver **330** would not be received within the buffers **335**. In response, in order that no data will be lost, control returns to the decision block **428**. However, if there is room within the buffers **335** of the wave driver **330**, then control passes to an activity block **439**.

As indicated in the activity block **439**, a block of compressed audio data within the buffer **315** is decompressed by the decoder **320** and is passed to the scratch buffer **326**. From the activity block **439**, control passes to an activity block **440** wherein the buffer **335** within the wave driver **330** is loaded with the decompressed audio data from the scratch buffer **326**. Control then returns to the decision block **428** wherein the subscriber PC **110** checks for pending messages, and from there control passes to the decision block **435** wherein another determination is made if the buffers **315** are full.

If the buffers **315** are not full, then control passes to a decision block **442** wherein the subscriber PC **110** determines if audio data is available from the receiver **300**. If audio data is not available from the receiver **300**, then control returns to the decision block **428**. However, if it is determined within the decision block **442** that audio data is available from the receiver **300**, then control passes to a subroutine block **444** wherein the CPU **310** reads the data provided by the receiver **300**. The method employed by the present invention to read data within the read data block **444** will be described in greater detail with reference to FIG. 7 below.

Once the data is read within the subroutine block **444**, control passes to the decision block **443** wherein a test is performed to determine if this is the initial ramp-up or if a seek has been performed. That is, a determination is made whether or not this is the first audio data received by the buffer **315** since initialization of the audio-on-demand system **100** for a requested clip of audio data, or the first data received after a seek message has been transmitted to the server **240**. If the subscriber PC **110** determines that this is not the initial ramp-up or a seek, then control passes to a decision block **445** wherein the CPU **310** determines if a full block of compressed audio data is present within the buffer **315**.

If a full block of compressed audio data is not present within the buffer **315**, then this indicates that no data can be decompressed from the buffers **315** and passed to the wave driver **330**. This is because the audio data transmitted from the server **240** is in packetized form so that data is encoded into blocks and decoded on a block-by-block basis. Control therefore passes to an activity block **450** wherein a dropout flag is set to indicate the possibility of audio dropout. More specifically, the dropout flag may be used as a measure or indication of how well the transfer of audio data is being accomplished. A high frequency of dropout flags indicates that the audio data is not being transferred well while a low frequency of dropout flags indicates that audio data is being transferred smoothly. Control then passes from the activity block **450** to the decision block **428**. However, if it is determined within the decision block **445** that a full block of compressed data is present within the buffer **315**, then this indicates that data is available to be decompressed and passed to the wave driver **330** via the buffer **326**. In response, control passes to the decision block **415** wherein a test is performed to determine if there is room within the wave driver buffers **335**, and the previously described method is followed.

If it was determined within the decision block **435** that this is the initial ramp-up or that a seek has been initiated, this indicates that the buffer **315** within the CPU **310** needs to be filled up to a certain level before transmission of audio data can begin. By filling up a certain amount of buffer memory (e.g., 2 Kilobytes of buffer memory), the audio-on-demand system **100** of the present invention guards against dropout of audio data output from the speaker **340**. Such dropout could be observed if a series of erroneous data blocks were to be transmitted from the server **240** to the subscriber PC **110** and the buffer **315** was emptied so that no audio data would be passed on to the wave driver **330** or to the speaker **340**.

To insure that the buffer **315** has enough data to guard effectively against possible audio dropout, control passes from the decision block **435** to a decision block **455** which determines whether or not N blocks of digitally compressed audio data are present within the buffers **315**. In one embodiment, each compressed block of audio data takes up approximately 240 bytes of memory within the buffer **315**. The value of N may be chosen to optimize the performance of the system depending upon the specific application. For example, a slower computer may require a higher value of N to guard effectively against audio dropout than the value of N selected for a faster computer. It should also be understood that there are performance tradeoffs for selecting higher and lower values of N. Specifically, if too high a value of N is selected, then there will be a noticeable delay between the time the user selects an audio clip to be played and the time the audio clip is actually output over the speaker **340**. If too low a value of N is selected, then there may be noticeable audio dropout, especially at the beginning of the audio clip.

If it is determined within the decision block **455** that N blocks of data are not present within the buffers **315**, then control passes from the decision block **455** immediately to the decision block **428**. However, if there are N blocks of data present within the buffers **315**, control instead passes to an activity block **460** wherein an initial ramp-up bit is set to false. The initial ramp-up bit is monitored in the decision block **443** to determine if the audio-on-demand system is in the initial ramp-up stage. Control passes from the activity block **460** to the decision block **445** to determine if a full block of compressed audio data is available within the buffer **315** to be decompressed.

FIG. **5** details the operation of the wave driver **330**. It should be noted that the operation of the wave driver **330** depicted in FIG. **5** is substantially independent of the general control flow operation depicted in the flow chart of FIGS. **4A** and **4B**, so that the process described in accordance with the flowchart of FIG. **5** can be considered as running as a background process. The control flow for the wave driver **330** initializes in a block **500** and passes to a decision block **510**. Within the decision block **510**, a determination is made if a block of decompressed audio data is being played by the wave driver **330**. If a block of decompressed audio data is being played by the wave driver **330**, then control passes to an activity block **520** wherein the remaining parts of the block which is being played are output to the speaker **340**. Control then returns to the decision block **510**.

If it is determined within the decision block **510** that a block is not being played, then control instead passes to a decision block **530** wherein a determination is made if a block is present within the input buffer **335** of the wave driver **330**. If there is no block present within the input buffer **335**, then this indicates that no audio data will be played in the next cycle so that some degree of audio degradation or dropout will be observed at the output of the speaker **340**. Once control passes from the decision block **530**, control returns to the decision block **510**. However, if a block is present within the input buffer **335**, then control passes to an activity block **540** wherein a block is dequeued so that the dequeued block is played over the speaker **340** under the control of the wave driver **330**. Once a block has been dequeued for playback, control passes from the activity block **540** to the decision block **510**.

FIG. **6A** and **6B** are control flow diagrams showing the general operation of the audio server **240** (or the proxy servers **260**) shown in FIGS. **1** and **2**. Although the control flow diagram is represented in FIGS. **6A** and **6B** as operating in conjunction with a single server, one skilled in the art will appreciate that the audio server **240** advantageously operates in conjunction with multiple servers at once. In one preferred embodiment, wherein the server **240** comprises a SUN MICROSYSTEMS workstation, the server **240** is capable of operating in conjunction with as many as sixty servers at once. Control of the audio server **240** passes from a begin block **600** to a decision block **605** wherein the audio server **240** determines if the subscriber PC **110** has requested data. If the subscriber PC **110** has not requested data, the server **240** continues to monitor input lines from the subscriber PC **110** and to perform routine housekeeping activities until a data request is received from the subscriber PC **110**. Once the data request is received from the subscriber PC **110**, control passes from the decision block **605** to a decision block **610** wherein a test is performed to determine if the subscriber PC **110** has requested the name of the audio clip to be transmitted. If the subscriber PC **110** has not requested the name of the audio clip to be transmitted, then the audio server **240** continues to monitor the input lines from the subscriber PC **110** until a name is requested. The name request sent by the subscriber PC **110** may take the form of a data address of a memory location within the audio control center **120**, or simply a string of characters which serves to identify the audio data clip to be transmitted.

Once the subscriber PC **110** has requested the name of the clip, control passes to an activity block **620** wherein initialization data is sent to the subscriber PC **110**. The initialization data may advantageously include the name of the clip requested, a table of contents, and a LENGTH of clip message. The table of contents may include information about significant divisions within the data clip to be trans-

mitted and the times at which these divisions occur. The LENGTH of clip message indicates the length of the audio data clip in tenths of a second in one embodiment.

Once the initialization data has been transmitted to the subscriber PC **110**, control passes from the activity box **620** to a decision block **625**. Within the decision block **625** the audio server **240** determines if the server **240** has detected a stop marker at the end of the last transmitted block of compressed audio data.

In a preferred embodiment of the present invention, two kinds of markers (i.e., acknowledge and stop markers) are placed at the end of selected blocks of data (e.g., every 1 kilobyte block of data). These markers may be used to help manage the flow of data from the server **240** to the subscriber PC **110**. FIG. **13** schematically depicts the method employed in accordance with the present invention to manage the flow of data from the server **240** to the subscriber PC **110**. Of course, it will be appreciated that the depiction of the audio server **240** and the subscriber PC **110** in FIG. **13** is highly simplified in order to clearly depict the data flow management aspect of the present invention. An acknowledge marker **1300** advantageously may be placed at the end of every 2 kilobyte block of data within an output memory queue **1310** of the audio server **240**, while a stop marker **1320** may be placed at the end of the intermediate 2 kilobyte blocks of data. As discussed above, one advantageous embodiment of the present invention utilizes audio data blocks **1330** of approximately 240 bytes so that eight of these 240 byte data blocks combine to approximately fill a 2 kilobyte data block, as shown in FIG. **13**. Of course, it should be noted that the location and frequency of the acknowledge and stop markers **1300**, **1320** is preferably selected based upon the processing speed of the subscriber PC **110**. Thus, PCs having higher processing speeds and generally are capable of receiving more blocks of data between stop and acknowledge markers.

The acknowledge marker **1300** indicates to the subscriber PC **110** that an acknowledge signal should be sent from the subscriber PC **110** to the server **240**. The stop marker **1320** indicates to the server **240** that no further blocks of data are to be transmitted until the server receives an acknowledge signal from the subscriber PC **110**. Thus, if the server **240** determines within the decision block **625** that a stop marker **1320** is detected, then control passes to a decision block **630**, wherein the server **240** determines if an acknowledge signal has been received from the subscriber PC **110**. However, if the server **240** determines that no stop marker **1320** has been detected, then control passes directly to a decision block **635**.

By interleaving the acknowledge and stop markers **1300**, **1320**, the flow of data between the audio server **240** and the subscriber PC **110** can be regulated so that the buffers **315** within the subscriber unit CPU **310** are maintained at near maximum capacity without overflowing. As described above with reference to FIG. **4B**, the CPU **310** within the subscriber unit **110** constantly monitors the memory allocated within the buffer **315** within the decision block **435**. As data is read into the buffer **315** and acknowledge markers are detected by the receiving CPU **310**, the CPU **310** determines how much memory space is left within the buffer **315**. If there is sufficient memory space left in the buffer **315** to hold as much data as will be transmitted from the server **240** until the stop marker after the next acknowledge marker is detected by the server **240** (e.g., 1440 bytes of data), then the subscriber PC **110** transmits an acknowledge signal to the server **240**. However, if there is not sufficient memory space within the buffer **315** to hold the data that would be transmitted, then the subscriber PC **110** does not transmit an acknowledge signal to the server **240**. When the subscriber PC **110** determines that there is sufficient room within the buffer **315**, then the subscriber PC **110** transmits the acknowledge signal to indicate to the server **240** that more data can be transmitted to the subscriber PC **110**. In this manner, the acknowledge and stop markers regulate the flow of data from the server **240** to the subscriber PC **110** to insure that the buffers **315** within the subscriber unit CPU **310** are maintained at near maximum capacity without overflowing. The above described method of regulating the flow of data between the subscriber PC and the server **240** may be implemented external to the server **240** and the subscriber PC **110** in flow controllers **272**, **280** as shown in FIG. **2B**, or may simply be implemented within the server **240** and the subscriber PC **110**, as described above. It should be noted here, however, that in applications where the server **240** communicates with the subscriber unit **110** via a specialized communication link, such as TCP/IP, which provides data flow management services automatically, it is not necessary to employ the above-described method of regulating data flow from the server **240** to the subscriber PC **110**.

If the server **240** determines within the decision block **630** that an acknowledge signal from the subscriber PC **110** has not been received, this indicates that the subscriber PC **110** has not yet successfully received and buffered the previously transmitted data block. In response, control returns to the decision block **630** wherein another test is performed to determine if an acknowledge signal has been received. Consequently, when the audio server **240** detects a stop marker, the server **240** will wait for an acknowledge signal from the subscriber PC **110** so that additional data blocks are not transmitted to the subscriber PC **110** until an acknowledge signal has been received from the subscriber PC **110**. Once the server **240** has received the acknowledge signal from the subscriber PC **110** indicating that the transmitted data block has been successfully buffered at the subscriber PC **110**, then control of the method passes to the decision block **635**.

Within the decision block **635** the audio server **240** determines if the server **240** has received a seek signal from the subscriber PC **110**. As detailed above, the seek signal is transmitted by the subscriber PC **110** when the subscriber PC **110** intends to scan through the audio clip being transmitted by the server **240** and locate an audio portion on the clip. For instance, if the user is listening to the recording of a song and the user wishes to replay the last 10 seconds over again, the user inputs this information into the PC **110**. The subscriber PC **110** then sends a seek message to the audio server **240**. The seek message includes a binary value, which represents, in tenths of seconds, the location in the audio clip being played to which the user wishes to advance or retreat. When the server **240** receives a seek signal from the subscriber PC **110**, control passes from the decision block **635** to an activity block **640** wherein a seek acknowledge message is sent from the server **240** to the subscriber PC **110**. The seek acknowledge message indicates to the subscriber PC **110** that the seek message has been received by the server **240**, so that the subscriber PC **110** can prepare to receive new data.

Control passes from the activity block **640** to an activity block **645** wherein the audio control center **120** scans within the memory location containing the audio clip being transmitted and goes to an address at or near the time requested by the seek message. Control then passes from the activity block **645** to an activity block **650** via the continuation point B so that the audio data block at the location requested by

the subscriber PC **110** is now transmitted to the subscriber PC **110** from the server **240**, as indicated within the activity block **650**.

If the server **240** has not received a seek signal from the subscriber PC **110** then control passes from the decision block **635** to a decision block **655**. Within the decision block **655**, a test is performed to determine if the server **240** has received a pause message. If the server **240** has received a pause message from the subscriber PC **110**, this indicates that the user of the subscriber PC **110** wants to temporarily discontinue listening to the audio clip. Thus, in this case, the server **240** transmits enough data to fill up the buffers **315** of the subscriber unit CPU **310**, and then discontinues data transmission until a resume signal, which, in one embodiment, is identical to the begin signal transmitted within the activity block **411**, is received from the subscriber PC **110**. In response, control passes from the decision block **655** to the decision block **625**. If, however, the server **240** has not received a pause message, control passes instead to a decision block **660** wherein a test is performed to determine if the server **240** has received a stop message. A stop message indicates that the user wishes to discontinue the particular audio clip being played. If the server **240** has received a stop message, then control passes from the decision block **660** to the decision block **605**. However, if the server **240** has not received a stop message, then control passes to decision block **670** via a continuation point A.

Within the decision block **670** (see FIG. **6B**) the audio server **240** determines if the server **240** has received an end message from the subscriber PC **110**. An end message indicates that the subscriber PC **110** no longer wishes to access audio data from the audio control center **120**. In response, control passes from the decision block **670** to an end block **675** when the server **240** receives an end message from the subscriber PC **110**.

If a server **240** has not received an end message from the subscriber PC **110**, control passes from the decision block **670** to the activity block **650** wherein the next one kilobyte block of compressed audio data is transmitted to the subscriber PC **110**. From the activity block **650**, control passes to an activity block **678** wherein an indexing variable, i, is incremented. Control then passes to a decision block **680** wherein the audio server **240** performs a test to determine if M data blocks have been sent. Every M data blocks the server **240** sends a time message which consists of information relating to the time elapsed within the audio clip. The time message may consist of an independent message signal which typically preceedes an audio data block. Thus, if M data blocks have been sent by the server **240** to the subscriber PC **110** successively, (i.e., the indexing variable i equals M) then control passes to an activity block **685** wherein the time message is sent to the subscriber PC **110**. As indicated above, the time message indicates the time elapsed within the audio clip being sent. Control passes from the activity block **685** to an activity block **690** wherein the variable i is reset to 0.0. Control then returns to the decision block **625** (see FIG. **6A**) via the continuation point C. Of course, it should be understood that, in one embodiment, a time stamp is included with every data block so that it is not necessary to include the operations represented in the blocks **678–690**.

FIG. **7** depicts a control flow diagram which details the method employed within the read data subroutine block **444** of FIG. **4B**. Once it has been determined that a data block should be read, the subscriber PC **110** determines what kind of data block is provided at the output of the receiver **300** (FIG. **3**). Control passes from a begin block **700** to a decision block **705**, wherein the subscriber PC **110** determines if the data block provided at the output of the receiver **300** contains audio data. As detailed above, an AUDIO DATA block typically includes a one-byte identifier field which indicates that the block is an AUDIO DATA block, a one-byte length field which indicates the length, in bytes, of the data field to follow, and a multiple-byte data field which contains digitized audio data. If the subscriber PC **110** determines that audio data is provided at the output of the receiver **300**, then control passes to an activity block **710**, wherein the AUDIO DATA block is loaded into the buffer **315**. Control then passes to a return block **712** which passes the operation of the system back to the flow of control depicted within FIG. **4B** (i.e., control returns to the decision block **443** in FIG. **4B**) . However, if the subscriber PC **110** determines that the data block provided at the output of the receiver **300** does not contain audio data, then control passes from the decision block **705** to a decision block **715**.

Within the decision block **715**, the subscriber PC **110** determines if the data available indicates the time elapsed within the audio clip being played. That is, if the data available at the output of the receiver **300** is a TIME data block. In one embodiment, the TIME data block comprises four bytes of data indicating the time elapsed, in tenths of a second, within the currently played audio clip. When a TIME data block is detected within the decision block **715**, control passes to an activity block **720**, wherein the time data contained within the TIME data block is indicated on the video display **115** of the subscriber PC **110** within a time elapsed field **890** (FIG. **8A**). Alternatively, in order to save bandwidth, the server **240** could simply transmit a three-byte ΔTIME message which indicates the time difference between the last time update and the current time. For example, assuming the time differences between updates is small, if the audio clip is at 1:01.6 (one minute, one and six tenths seconds) when the last time update arives, and 0.3 seconds elapse between the last update and the current update, then a ΔTIME signal having a binary value corresponding to 0.3 seconds is sent to the subscriber PC **110** from the server. This requires fewer bits to transmit than a message indicating a binary value of 1:01.9, so that bandwidth may be saved by using ΔTIME messages rather than TIME messages. Control then passes from the activity block **720** to the return block **712**. However, if the subscriber PC **110** determines within the decision block **715** that the data block available at the output of the receiver **300** is not a TIME data block, control passes to a decision block **725**.

Within the decision block **725**, the subscriber PC **110** determines if the data block available at the output of the receiver **300** is a SEEK ACKNOWLEDGE block. As described above, the SEEK ACKNOWLEDGE block is a one-byte acknowledge from the server **240** that the server **240** has received a seek message from the subscriber PC **110**. If the data block available at the output of the receiver **300** is a SEEK ACKNOWLEDGE block, control passes from the decision block **725** to a subroutine block **735**, wherein the buffers **315** are flushed. That is, the buffers **315** are emptied. In one embodiment, the buffers **315** are flushed by simply outputting the data contained within the buffers to the wave driver **330** and playing the remaining audio data over the speakers **340**. In another embodiment, the buffers **315** are emptied without playing the audio data contained within the buffers. Control passes from the subroutine block **735** to a decision block **740**, wherein the subscriber PC **110** waits for new data to arrive from the server **240**. If new data has not arrived, then control returns to the decision block **740** until new data arrives. Once new data arrives from the

server **240**, control passes from the decision block **740** back to the decision block **705**. If it was determined within the decision block **725** that the data block available at the output of the receiver **300** is not a SEEK ACKNOWLEDGE data block, control passes from the decision block **725** to a decision block **730**.

Within the decision block **730**, the subscriber PC **110** determines if the data available at the output of the receiver **300** is a data block indicating the length of the audio clip to be transmitted (i.e., a LENGTH block), or a data block containing a table of contents (i.e., a TOC block) relating to the order of audio data within the audio clip to be sent. In one embodiment, data blocks containing information relating to the length of the audio clip to be played comprise a four-byte data block indicating length in tenths of a second, while the data blocks containing information relating to a table of contents of the audio clip to be played comprise an multiple-byte data block which varies according to the size of the table of contents to be transmitted. If the subscriber PC **110** determines that the data block available at the output of the receiver **300** is, in fact, a LENGTH data block, or a TOC data block, control passes from the decision block **730** to an activity block **745** within the activity block **745**, the subscriber PC **110** indicates the length of the audio clip to be played on the video display **115** of the subscriber PC **110** within a length field **880** (FIG. 8A), or displays the table of contents information on the video display **115** of the subscriber PC **110** within a table of contents display box **895** (FIG. 8A). Control then passes from the activity block **745** to the return block **712**. However, if it is determined within the decision block **730** that the data block available at the output of the receiver **300** is not a LENGTH block or a TOC data block, control passes instead to a decision block **750**.

As indicated by the decision block **750**, the subscriber PC **110** determines if the data block is an END data block. If the data block available at the output of the receiver **300** is an END data block, control passes from the decision block **750** to an end block **755**, wherein the subscriber PC **110** terminates the connection with the audio control center **120**. However, if no END data block is detected at the output of the receiver **300**, control passes to the return block **712**, and control returns to the method depicted in FIG. 4B.

In addition to providing real time audio on demand using only the processing power available within a conventional personal computer system, such as an IBM PC having a 486 microprocessor, in accordance with the apparatus and method described above, the present invention also provides a number of other significant and advantageous features. In one embodiment the present invention allows for transmission of higher quality data by intermixing audio data blocks having lossless compression (i.e., compression which results in substantially no loss of digital data) or compression which produces data which is sent in greater than real time, with audio data blocks compressed according to the IS-54 standard specified compression algorithm. Furthermore, the present invention advantageously contemplates providing an authoring tool which gives the user the ability to unify video and audio data. Additionally, the system of the present invention advantageously provides a visually displayed outline of the audio data wherein visual data which relates to the audio data being played is displayed on the video display terminal **115** of the subscriber PC **110**. Furthermore, the user advantageously may have instant access to any one of a number of significant divisions within the audio clip being played. For example, a user listening to a baseball game via the audio-on-demand system of the present invention may decide to advance to the bottom of the 9th inning from some other place within the baseball game audio clip. Finally, in a further aspect of the present invention, the audio-on-demand system of the present invention may advantageously dynamically allocate server/subscriber pairs based upon geographic proximity and quality of communication links so as to maximize the quality of the audio data transmitted from the server to the subscriber.

FIG. **9** illustrates one feature of the present invention wherein high quality audio data which is compressed according to a lossless compression algorithm is mixed with normal quality audio data which is compressed according to the compression algorithm specified within the IS-54 standard. Since the audio-on-demand system **100** allows for greater than real time delivery of audio data to the subscriber PC **110** in many cases, the buffers **315** may be loaded to a capacity such that it is safe to transmit short bursts of high quality audio at lower than real time. These bursts of data are advantageously transmitted in advance of the actual time in which they will be played to provide for high quality audio segments of significant length.

In one preferred embodiment, the present invention provides for high quality playback of audio data by including a separate "high quality" buffer **1110** (FIG. 11) within the DRAM of the subscriber PC **110** for holding high quality audio data. In such an embodiment, the user may indicate which portions of the audio clip are to be designated as "high quality." The high quality audio data corresponding to the designated portions of the audio clip to be played is then sent in advance (e.g., during initial ramp-up, or when the buffer **315** is full) to the subscriber PC **110** where this data is stored in the separate "high quality" buffer **1110**. This data would be accompanied by a time stamp indicating when it should be played. The high quality data is then decompressed at the time indicated by the time stamp to provide high quality playback of selected portions of the selected audio clip.

In another preferred embodiment, the audio clip includes predesignated portions of high quality audio data. This data is predesignated based upon the kind of data to be transmitted. Advantageously, musical jingles in a spoken narration (such as a commercial) or other musical data or sound effects (e.g., recorded animal sounds and excerpts from actual speeches) in the context of a spoken narration could be predesignated as high quality. This is particularly advantageous since high compression audio algorithms, such as that employed in accordance with the present invention to create normal quality compressed audio data, typically do not provide high quality reproduction for musical audio data. In such an embodiment, the predesignated high quality data is transmitted in advance so that a substantial portion (e.g., a twenty or thirty second clip) of audio data is stored in the high quality buffer **1110**. The high quality data is then played back at the times designated by the time stamp associated with each data block.

According to these embodiments of the invention, the subscriber PC **110** continuously monitors the status of the buffers **315** to determine if the buffers **315** typically remain at or near maximum capacity. If the subscriber PC **110** determines that the buffers **315** are at or near maximum capacity a high percentage of the time (e.g., advantageously 85%, while percentages in the range of 60% to 95% may be used as well, as called for by the specific application), then the subscriber PC **110** will send a high quality message (e.g., the EXTRAS OK message) to the audio control center **120**. The high quality message indicates to the audio control center **120** that the audio control center **120** should transmit high quality data compressed according to a lossless compression algorithm. The high quality data will be based upon

the same audio source information as the normal quality data. Thus, no discontinuities will be perceived by the listener in the audio data transmitter. Therfore if, for example, it is determined that there is insufficient bandwidth to send high quality data, normal quality data may be transmitted instead as a substitute for the high quality data. As the high quality audio data is received by the subscriber PC **110**, the subscriber PC **110** monitors the status of the buffers **315**. If the buffers **315** fall below a certain percentage of maximum capacity (e.g., 60% of maximum capacity), then the subscriber PC **110** sends a message to the audio control center **120** to discontinue transmission of the high quality data and instead supply the audio data compressed according to the IS-54 standard. In this manner, high quality data is transmitted in advance so that significantly long portions of high quality data may be assembled within the high quality buffer within the subscriber PC **110**.

It should be understood that the audio control center **120** shown in FIG. **9** is simplified, for purposes of the following description, to show only a single memory bank rather than the disk and archival storage locations **230**, **235** depicted in FIG. **2**A. According to this embodiment of the invention, an audio data bank **900** contains audio data compressed according to the compression algorithm specified by the IS-54 standard, while another audio data memory bank **910** contains data compressed according to a lossless compression algorithm or a compression algorithm which requires transmission of audio data in greater than real time. In one embodiment, the lossless compression algorithm used in accordance with the present invention is the well known LEMPEL-ZIV audio compression algorithm. Such an audio compression algorithm has a compression ratio of approximately 3:1. A switching system (which is advantageously implemented in software) including a switch controller **920** and a high speed switch **930** is provided which allows the audio control center **120** to switch alternately between the audio bank **900** and the audio bank **910**.

A time elapsed sequence of data transfers is schematically depicted in FIG. **9** wherein the data transfer sequence begins at the top and continues in order to the bottom. In the schematic representation of FIG. **9**, each box of the buffers **315** represents a memory storage location capable of holding, for example, one compressed block of normal quality audio data. Those boxes containing a "N" contain normal quality compressed audio data (i.e., data compressed according to the compression algorithm specified in the IS-45 standard), while data blocks containing an "H" contain high quality compressed audio data (i.e., data compressed according to a lossless compression algorithm). As shown in FIG. **9**, each high quality audio block corresponds to approximately the same audio playback time as one normal quality audio block but requires significantly more memory storage space. Each high quality audio storage block is shown as taking up approximately eight times the memory storage taken up by each normal quality audio block.

When the subscriber PC **110** determines that the buffers **315** are near maximum capacity (e.g., above 85% of capacity), this indicates that the normal quality data is being transferred in real time or greater than real time. In response, the subscriber PC **100** sends a "high quality" signal to the audio control center **120** to indicate that high quality data should be sent by the audio control center **120**.

When the audio control center **120** receives the "high quality" signal from the subscriber PC **110**, the switch controller **920** within the audio control center **120** causes the switch **930** to connect the high quality data bank **910** to the output line **130**. In response, the audio control center **120** causes high quality data to be sent over the telephone line **130** to the subscriber PC **110**. In one embodiment, in order to assure that no audio data is lost during switching, an address pointer is constantly scanning addresses corresponding to identical audio data in both audio banks **900**, **910**. Thus, the audio data output by the high quality audio data bank **910** will contain the same audio information as would have been provided by the normal quality audio data bank **900**.

As shown in FIG. **9**, the high quality audio data takes more time to transmit since more data is being transmitted at the same baud rate. Thus, the high quality data is represented as being in wider blocks which are spaced farther apart on the communication line **130** than are the normal quality data blocks. Of course, it will be understood that, although several blocks of data are represented as being placed simultaneously on the line **130**, in practice, one or two blocks will typically be present on the line at a time while the other blocks represented are understood to be pending in a server output queue (not shown).

Once a "high quality" request is issued by the subscriber PC **110** the normal quality data still on the line **130** is received by the buffers **315**, so that the buffers **315** remain at maximum capacity due to the high transmission rate of the normal quality data. This case is depicted in the first (i.e., top) two stages of the time elapsed data transfer sequence of FIG. **9**. However, once the remaining normal quality data blocks have been received into the buffers **315**, high quality data blocks are subsequently received by the high quality buffer **1110**. The middle three stages of the time elapsed data transfer sequence of FIG. **9** depict high quality data blocks being read into the buffer **1110**. As with the normal quality data, the high quality data blocks are read into the buffer **1110** in small bits (e.g., in 240 byte blocks) at a time. Thus, the high quality data is continuously being read into the buffer **1110** as the normal quality data blocks are evacuating. The high quality data blocks remain in the buffer **1110** until the designated time in the audio clip at which the high quality data blocks are to be played.

Once the buffers **315** fall beneath a certain percentage of maximum capacity (e.g., 60%), the subscriber PC **110** transmits a "normal quality" signal to the audio control center **120** to indicate that the audio control center **120** should discontinue transmitting data from the high quality audio bank **910** and resume transmitting data from the normal quality audio bank **900**. This is depicted in the fourth stage of the time elapsed data transfer sequence of FIG. **9**. In response to the "normal quality" signal, the switch controller **920** connects the normal quality audio data bank with the communication line **130** via the high speed switch **930**. All the while, an address pointer is constantly scanning addresses corresponding to identical audio data in both audio banks **900**, **910**. Thus, the audio data output by the normal quality audio data bank **900** will contain the same audio information as would have been provided by the high quality audio data bank **910**. As the normal quality data blocks are transmitted at greater than real time, the buffer **315** begins to refill and approach maximum capacity. This is depicted in the last three stages of the time elapsed data transfer sequence of FIG. **9**. Once the buffer **315** has remained at or near maximum capacity for a predetermined amount of time (or the frequency of dropout flags is sufficiently low), the process is repeated so that high quality data can be periodically combined with normal quality data. Thus, an audio signal having small periods of higher quality playback is provided using the above-described feature of

the present invention so that a net overall improvement of sound quality results.

Under another aspect of the present invention, limited "metadata" is also transmitted in synchronism with the audio data. In the context of the present invention, metadata should be understood to mean extra or additional data beyond the already transmitted normal quality audio data (e.g., text, captions, still images, limited video, high quality audio data, etc.). Thus, for example, a graphic display may be provided on the video display **115** of the subscriber PC **110** which depicts still images of people whose voices are played in the audio clip. A caption or other indicia may be used to indicate which of the visually depicted speakers is currently speaking in the audio clip.

FIG. **10** is a simplified block diagram which depicts an audio-on-demand system **1000** which is specially adapted to transmit synchronized metadata with audio data. The system **1000** is shown to include the audio control center **120** which is specially adapted to include an audio data file **1005** and a metadata file **1010**. Of course, it will be appreciated that, although not shown here, the audio control center **120** also includes the elements depicted in FIG. 2A. A switch controller **1020** controls a high speed switching device **1030** which may, for example, comprise a multiplexer. The output of the switching device **1030** connects to the receiver **300** within the subscriber PC **110** via the communication line **130**. It will be understood that the subscriber PC **110** includes the elements depicted in FIG. 3, although many of these elements (e.g., the CPU **310** and the wave driver **330**) are not depicted in FIG. **10**. As shown in FIG. **10**, the subscriber PC **110** is specially adapted to include a high speed switch **1050** which connects to the output of the receiver **300** and which, in one embodiment, may comprise a demultiplexer. The switch **1050** is controlled by a switch controller **1060** which may, for example, be implemented within the CPU **310** (not shown). The switching mechanism **1050** connects alternatively to the audio buffers **315**, or to metadata buffers **1070**. As with the audio data buffers **315**, the metadata buffers **1070** may be allocated as a portion of the DRAM within the subscriber PC **110**.

In operation, the audio control center **120** transmits data to the subscriber PC according to the methods described above with reference to FIGS. **1–8**. In addition, the audio control center **120** is able to transmit metadata such as text, captions, still images, a table of pertinent statistics, etc., which are synchronized with, and relate to, the transmitted audio data. Thus, for example, while a user is listening to a baseball game, a graphical display may be shown (see the display **895** of FIG. 8A) which indicates the current batter and other pertinent information such as the inning, the count and the score of the game. This data is displayed and updated in synchronism with the transmitted audio data so that the displayed metadata corresponds to the audio data which is currently being played back. Synchronization of the audio data and metadata is advantageously accomplished by time stamping the metadata to be activated at a corresponding time in the audio data transmission. Software running within the CPU **310** advantageously correlates the time stamped metadata with the audio data being played back without requiring ancillary coprocessors.

To accomplish the metadata feature of the present invention, the audio-on-demand system **1000** monitors the quality of the connection between the audio control center **120** and the subscriber PC **110**. When a connection of satisfactory quality has been made, the audio control center **120** will begin to transmit interleaved audio and metadata blocks. The audio data blocks are provided by the audio data bank **1005** while the metadata blocks are provided by the metadata bank **1010**. The switch **1030** alternately provided audio and metadata over the line **130** so that the audio blocks are interleaved with the metadata blocks in a ratio of, for example, two audio blocks for each metadata block (of course other ratios may be preferable depending upon the specific application and the quality of the connection between the audio control center and the subscriber PC **110**).

The subscriber PC **110** receives the transmitted audio data and metadata and selectively stores the audio data within the audio data buffers **315** and the metadata within the metadata buffers **1070**. To accomplish selective storing of the audio data and metadata within the appropriate buffers **315**, **1070**, the switch controller **1060** causes the switch **1050** to switch with the same timing as the switch **1030**.

Several methods may be employed to determine if the audio control center **120** should begin transmitting metadata with audio data. In one preferred embodiment, the subscriber PC **110** may wait until the initial ramp-up is complete (i.e., until the audio data buffer **315** has stored at least N data blocks), and then immediately send an EXTRAS OK message to the audio control center **120**. The subscriber PC **110** thereafter constantly monitors the audio buffers **315**. If the number of audio blocks in the buffers **315** is less than, for example, N/4 then the subscriber PC **110** sends an EXTRAS NO message to the audio control center **120** to indicate that only normal quality audio data and no metadata should be transmitted. When N blocks are again availiable within the buffer **315**, then EXTRAS OK is again transmitted.

In a preferred embodiment, metadata which relates to a selected audio clip is transmitted to the subscriber PC **110** in advance of the time the metadata is actually to be displayed. Typically, metadata for an entire audio clip will comprise a significantly smaller portion of the overall transmitted data than will the audio data for that clip. Thus, the metadata for an entire audio clip may be transmitted, in interleave fashion with the audio data, in the first portion of the clip. By transmitting the metadata in advance, no delays are encountered when displaying the metadata on the display screen **115**. This allows the subscriber PC **110** to display the metadata substantially synchronously with a corresponding audio event in the audio clip. To this end, each block of metadata will typically be accompanied by a time stamp as well as a row/column indicator. The time stamp indicates when the metadata is to be displayed during playback of an audio clip (e.g., a caption may be displayed at the 2 minute, 42 and 3 tenths second place in the audio clip). The row/column indicator determines where on the display screen **115** the metadata is to be presented (e.g., the caption may be displayed at the 312th pixel column and the 85th pixel row on the display screen **115**).

In addition to transmitting advance metadata in the beginning of an audio clip transmission, metadata may also be transmitted in advance at the occurrence of every seek. When the user initiates a seek, the audio control center **120** transmits audio data from the point of the seek until the subscriber PC **110** sends an EXTRAS OK message (i.e., indicates that metadata is to be sent). The subscriber PC **110** then transmits metadata, interleaved with the audio data, relating to audio to be played back after the point designated by the seek message. Since the metadata advantageously includes a time stamp, it is routine for the server **240** to identify which metadata corresponds to audio data after the location designated by the seek message. In this manner, metadata can be provided without delay so that the metadata occurs substantially simultaneously with corresponding audio data.

According to a still further embodiment of the present invention, connections between proxy servers **260** and subscriber PCs **110** may be dynamically allocated. As is well known in the art, local communication links typically provide higher quality connections for sustained periods than long distance communication links. In accordance with a further aspect of the invention, dynamic allocation of server/subscriber pairs is used to provide improved quality communication links. In one such preferred embodiment, a number of proxy servers **260** (FIG. 2A) are distributed throughout a geographic area. Each subscriber PC **110** is provided with a map (which may be updated periodically) that indicates the locations of the local proxy servers **260**. Based upon the geographic location of the subscriber PC **110**, the subscriber PC **110** selects a server and establishes communication with that server for future transfers of audio data. In the event that a local proxy server **260** does not have an audio clip requested by a user, the proxy server **260** contacts a central server **240**. As the central server **240** downloads the audio data corresponding to the requested audio clip, the proxy server **260** begins transmitting data to the subscriber PC **110** for playback. In a particularly preferred embodiment, the proxy server **260** begins downloading audio data to the subscriber PC **110** even before the proxy server **260** has received the entire audio clip from the central server **240**. Thus, the dynamic allocation of server/subscriber pairs provides an improved quality audio data signal in the audio-on-demand system of the present invention.

In a still further embodiment of the present invention depicted in FIG. 12, the audio control center **120** may transmit advance data including a visually displayed table of contents. The table of contents indicates significant divisions, or segments, within the requested audio clip (for example, chapters in a book, innings of a baseball game, movements in a sonata). In addition to transmitting the table of contents, the audio control center **120** also transmits a small portion of audio data (e.g., one second worth of audio data) corresponding to the beginning of each division depicted in the table of contents. The table of contents and advance audio data are then stored within a separate advance buffer **1210** as shown in FIG. 12. If the user wishes to access any one of the listed divisions within the requested audio clip, then the user may simply click a mouse button while the mouse pointer is over the listing in the table of contents on the display screen **115**. The subscriber PC **110** immediately accesses the advance buffer **1210** to playback the audio data at the selected division. In the meanwhile, the subscriber PC **110** sends a message to the audio control center **120** to transmit additional audio data corresponding to the remainder of the requested audio clip from the selected division. In this manner, the audio-on-demand system of the present invention provides immediate playback of audio when the user selects playback at prespecified portions of the audio clip corresponding to significant divisions within the audio clip.

By way of example, the server **240** could transmit a table of contents indicating the chapters of a book which is being read to a user at the subscriber PC **110**. When the user wants to advance to another chapter, the user simply places the mouse pointer over the listed chapter and clicks the mouse button. The server **240** receives this message and immediately begins transmitting data from the newly designated location at the beginning of the selected chapter. In the meantime, the subscriber PC **110** begins playing back the stored audio segment corresponding to the selected chapter. The stored audio segment corresponding to the selected chapter is long enough to allow the buffer **315** to fill up the buffers with a predetermined number of blocks (e.g., the same number of blocks used to fill the buffers at initial ramp-up). Thus, the present invention allows for immediate playback while also minimizing the risk of audio dropouts.

OVERALL OPERATION OF THE SERVER IN CONJUNCTION WITH THE SUBSCRIBER

In a preferred embodiment, when a user at the subscriber PC **110** wishes to access audio data on demand, the user logs onto the subscriber PC **110** and selects an "audio-on-demand" option which appears on the video display screen **115** of the subscriber PC **110**. Once the user has selected the audio-on-demand option, the subscriber PC **110** initiates a connection with the central server **240** or one of the proxy servers **260**. In one preferred embodiment, the subscriber PC **110** may enter information corresponding to the current geographic location of the subscriber PC **110**. This feature would be highly advantageous for subscriber PCs implemented as laptop or palmtop computers when the subscriber is travelling. The subscriber PC includes a map indicating the geographic locations of available servers. The subscriber PC **110** advantageously selects one of the available servers based upon the geographic proximity of the available servers to the subscriber PC **110**. In another embodiment, the central server **240** may assign a proxy server **260** to the subscriber PC **110** based upon the telephone number the subscriber PC **110** is calling from or information transmitted to the central server from the subscriber PC **110** regarding the subscriber PC's location.

Once communication has been established between the subscriber PC **110** and the selected server **240**, **260**, the server **240**, **260** transmits a menu of audio data clips which may be accessed by the subscriber PC **110**. Alternatively, the subscriber PC **110** may contain a prespecified menu of audio data. The menu is then displayed on the video screen **115** so that the user is advantageously able to scroll through the selections available on the menu list using a mouse pointer. The selections could include current radio broadcasts from selected cities, audio books, the audio from classic baseball games, music selections, and a number of other types of audio feeds. When the user finds a selection which is to be played, the user places the mouse pointer over the selection and clicks. The subscriber PC **110** then issues a request message to the server **240**, **260** which includes a designation of the selected clip. Upon receiving the request message, the server **240**, **260** accesses the requested audio clip within the memory of the server **240**, **260**. If the selected server is a proxy server **260**, and the proxy server **260** does not contain the requested clip in the temporary storage **265**, then the proxy server accesses the central server **240** to obtain the requested audio clip from the disk storage **230** or the archival storage **235**.

In one advantageous embodiment, the subscriber PC **110** automatically transmits a begin message immediately after transmitting the request message to the server so that the server **240**, **260** immediately begins to transmit the audio clip to the subscriber PC **110**. In another advantageous embodiment, the subscriber PC **110** waits for the user to select a begin option by clicking the mouse pointer over a begin field on the display screen **115**. In either embodiment, the server waits to receive the begin message to begin transmitting blocks of audio data to the subscriber PC **110**.

At the beginning of any audio transmission, the server **240**, **260** typically transmits a block of information indicating how long (i.e., how many seconds) the audio clip is. This data is displayed on the screen **115**.

The flow of data from the server **240**, **260** to the subscriber PC **110** may be regulated by means of conventional regu-

lation techniques employed in special communication links such as INTERNET which employs TCP/IP flow regulation. In other advantageous embodiments, the data stream from the server **240**, **260** to the subscriber PC **110** includes a plurality of interleaved stop and acknowledge markers. The acknowledge markers precede the stop markers and are spaced at equal intervals from the stop markers. As the server **240**, **260** sends data out over the communication link **130**, the server determines if a stop marker is detected in the data stream. Once a stop marker is detected, the server **240**, **260** temporarily ceases the transmission of data to the subscriber PC **110**. The acknowledge and stop markers are spaced so that the subscriber PC **110** will ordinarily receive an acknowledge marker as the server is just about to detect the stop marker. Once the subscriber PC **110** detects the acknowledge marker, the subscriber PC **110** checks to see if it will have enough room in the memory to accept all the data between the next two stop markers. If so, the subscriber PC **110** generates an acknowledge signal and transmits the acknowledge signal back to the server **240**, **260**. Upon receiving the acknowledge signal, the server **240**, **260** continues the transmission of data until the next stop marker is detected. If the subscriber PC finds that it cannot accept the data between the next two stop signals then it will not send the acknowledge signal and the server will stop sending data at the stop signal. In an appropriate server/receiver transmission environment the stop and acknowledge markers could be located in the same position in the data stream and in fact could be a single identical marker.

As audio data is received by the subscriber PC **110**, the subscriber PC **110** decompresses the data and loads this data into the wave driver **330** for output to the DAC **338**. The DAC **338** outputs the decompressed audio data to a speaker, or other audio transducer such as a hard plane, which plays back the audio data. Thus, for example, a baseball game could be played back at the subscriber PC **110**. Additional data (i.e., other than the audio data) is advantageously transmitted to the subscriber PC **110** from the server **240**, **260**. In a preferred embodiment, this additional data includes data which may be displayed on the video screen **115** such as the inning of the baseball game, the score, and the current batter. The audio data and the additional data is advantageously accompanied by time stamp information so that the additional data can be synchronously displayed with corresponding audio data.

Throughout the transmission, the user is presented with several options including an option to pause audio playback, an option to seek a new portion of the audio clip, an option to end transmission of the audio clip, etc. Each of these options may be selected by the user by means of the mouse pointer. The selection of any option causes a corresponding message to be sent to the server **240**, **260** indicating the selected option. The server **240**, **260** then responds in the appropriate manner.

Finally, the user may end the connection with the server **240**, **260** by activating a disconnect filed on the display screen **115** by means of the mouse pointer.

Although the preferred embodiment of the present invention has been described and illustrated above, those skilled in the art will appreciate that various changes and modifications to the present invention do not depart from the spirit of the invention. Accordingly, the scope of the present invention is limited only by the scope of the following appended claims.

What is claimed is:

1. A data stream, stored in a computer readable medium, comprising:

a plurality of stop markers, each of said stop markers marking a termination point in said data stream such that a first computer transmitting said data stream halts said transmission at said termination point until a second computer indicates to said first computer that said second computer has received data of said data stream;

a plurality of acknowledge markers different from said stop markers and interleaved between said stop markers, the interval between each acknowledge marker and the next stop marker being related to the time it takes to transmit data from said first computer to said second computer, said second computer responsive to said acknowledge markers to indicate to said first computer that said second computer has received data of said data stream.

2. A method of controlling the transmission of an audio data stream including a plurality of stop markers, and a plurality of acknowledge markers interleaved between said stop markers, said method comprising the steps of:

sending said acknowledge markers from a first location to a second location;

receiving said acknowledge markers at said second location;

generating an acknowledge signal and sending said acknowledge signal to said first location upon receiving said acknowledge marker; and

continuing sending data past said stop marker if said acknowledge marker is received at said first location.

3. A method as defined in claim **2**, wherein said audio data stream includes a plurality of data blocks, and wherein said acknowledge and stop markers are included at the ends of said data blocks.

4. A method of regulating the flow of compressed audio data between an audio server and a subscriber PC in an audio-on-demand system, said method comprising the steps of:

storing compressed audio data as audio data blocks within an audio data memory bank;

including an acknowledge marker in a plurality of said blocks;

including a stop marker in a plurality of said blocks wherein each of said stop markers is preceded by one of said acknowledge markers and wherein said stop markers have corresponding acknowledge markers;

transmitting said blocks from said audio server to said subscriber PC until said audio server detects one of said stop markers;

receiving said blocks at said subscriber PC;

transmitting an acknowledge signal from said subscriber PC to said audio server whenever said subscriber PC receives one of said acknowledge markers; and

continuing transmission of said blocks from said audio server to said subscriber PC despite the reading of a stop marker whenever said audio server receives an acknowledge signal corresponding to the stop marker.

5. The method of claim **4**, wherein the acknowledge and stop markers are identical and located at the same place in the audio data blocks.

6. The data stream as defined in claim **1**, wherein said intervals between each acknowledge marker and the next stop marker are equal.

* * * * *