UNITED STATES PATENT AND TRADEMARK OFFICE

BEFORE THE PATENT TRIAL AND APPEAL BOARD

THE WALT DISNEY COMPANY, DISNEY STREAMING SERVICES LLC,
HULU LLC, and NETFLIX INC.,
Petitioner

v.

WAG Acquisition, LLC,
Patent Owner

IPR2023-00813

U.S. Patent No. 9,729,594 B2
Issue Date: August 8, 2017

Title: STREAMING MEDIA DELIVERY SYSTEM

**PETITION FOR *INTER PARTES* REVIEW
OF U.S. PATENT NO. 9,729,594 B2**

Table of Contents

Page

I. Introduction 1

II. Mandatory Notices under § 42.8(A)(1) 1

A. Real Parties-In-Interest under § 42.8.(b)(1) 1

B. Related Matters under § 42.8(b)(2) 1

C. Lead and Back-Up Counsel under § 42.8(b)(3) 2

D. Service Information for Patent Owner (PO) Attorney of Record 3

III. Fee Payment Under § 42.103 3

IV. Requirements under §§ 42.104 and 42.108 4

A. Grounds for Standing 4

B. Identification of Challenge and Statement of Relief Requested 4

C. Discretionary Denial is Not Appropriate Here 4

1. Discretionary Denial Under *General Plastic* is Not Appropriate 4

2. The Board Should Not Exercise its Discretion Under 35 U.S.C. § 314(a) to Deny Institution 6

3. Discretionary Denial Under 35 U.S.C. § 325(d) is Not Appropriate 8

V. Overview of '594 Patent 9

A. Level of Ordinary Skill 9

B. Priority Date 9

C. The Challenged Claims 9

D. Claim Listing 9

VI. Claim Construction 9

"as required to maintain about a predetermined number of media data elements" 10

VII. The Challenged Claims are Obvious 10

A. Summary and Date Qualification of the Prior Art 10

Table of Contents
(continued)

Page

1. Carmel [EX1003] 10
2. Hill [EX1006] 11
3. Ravi [EX1004] 11
4. Aharoni [EX1008] 11
5. Galensky [EX1007] 11

B. Ground 1: Claims 1-17 Are Obvious Over Hill 11

1. Claim 1 11

a. "A method for operating a media player to receive and play an audio or video program, from a remote media source via a data connection over the Internet, the method comprising:" (Claim 1 [preamble]) 11

b. "sending requests from the media player to the media source via the data connection for one or more serially identified media data elements representing the audio or video program," (Claim 1[a(i)]) 12

c. "each media data element comprising a digitally encoded portion of the audio or video program and having a playback rate," (Claim 1[a(ii)]) 16

d. "each request specifying one or more serial identifiers of the media data elements request;" (Claim 1[a(iii]) 18

e. "receiving each of the requested media data elements via the data connection, wherein the data connection has a data rate more rapid than the playback rate of the media data elements, and" (Claim 1[b(i)]) 20

f. "each received media data element is received at a rate as fast as the data connection between the media source and the media player allows;" (Claim 1[b(ii)]) 21

Table of Contents
(continued)

Page

g. "storing the received media data elements in a memory of the media player;" (Claim 1[c]) 23

h. "playing the received media data elements in series from the memory of the media player; and" (Claim 1[d]) 24

i. "as the received media data elements are played, the media player automatically sending additional requests for subsequent media data elements for storage in the memory of the media player as required to maintain about a predetermined number of media data elements in the memory of the media player during playing." (Claim 1[e]) 24

2. Claim 2: "The method of claim 1, further comprising maintaining in the memory of the media player a record identifying the last media data element received and stored by the media player." 28

3. Claim 3: "The method of claim 1 wherein the serial identifiers are sequential." 29

4. Claim 4 ("The method of claim 1, wherein the receiving is via a reliable transmission protocol.") and Claim 5 ("The method of claim 4, wherein the reliable transmission protocol is TCP.") 30

5. Claim 6 (Independent) 31

6. Dependent Claims 7-10 32

7. Claim 11 (Independent) 33

8. Dependent claims 12, 13, 16, 17 33

9. Claim 14 ("The computer program product of claim 11, wherein the computer program product is provided as a software application for the media player.") and Claim 15 ("The computer program product of claim 11, wherein the computer program product is incorporated in the media player.") 34

Table of Contents
(continued)

Page

C. Grounds 2 and 3: Claims 1-17 Are Obvious Over Hill in view of Aharoni and Hill in view of Ravi.....35

D. Ground 4: Claims 1-17 Are Obvious Over Carmel in view of Hill.....41

1. Claim 1.....41

a. "A method for operating a media player to receive and play an audio or video program, from a remote media source via a data connection over the Internet, the method comprising:" (Claim 1 [preamble]).....41

b. "sending requests from the media player to the media source via the data connection for one or more serially identified media data elements representing the audio or video program," (Claim 1[a(i)]).....42

c. "each media data element comprising a digitally encoded portion of the audio or video program and having a playback rate," (Claim 1[a(ii)]).....44

d. "each request specifying one or more serial identifiers of the media data elements requested;" (Claim 1[a(iii)]).....45

e. "receiving each of the requested media data elements via the data connection, wherein the data connection has a data rate more rapid than the playback rate of the media data elements, and" (Claim 1[b(i)]).....46

f. "each received media data element is received at a rate as fast as the data connection between the media source and the media player allows;" (Claim 1[b(ii)]).....50

g. "storing the received media data elements in a memory of the media player;" (Claim 1[c]).....51

Table of Contents
(continued)

Page

h. "playing the received media data elements in series from the memory of the media player; and" (Claim 1[d]) 51

i. as the received media data elements are played, the media player automatically sending additional requests for subsequent media data elements for storage in the memory of the media player as required to maintain about a predetermined number of media data elements in the memory of the media player during playing." (Claim 1[e]) 52

2. Claim 2: "The method of claim 1, further comprising maintaining in the memory of the media player a record identifying the last media data element received and stored by the media player." 54

3. Claim 3: "The method of claim 1 wherein the serial identifiers are sequential." 56

4. Claim 4: "The method of claim 1, wherein the receiving is via a reliable transmission protocol." and Claim 5: "The method of claim 4, wherein the reliable transmission protocol is TCP." 56

5. Claim 6 (Independent) 56

6. Dependent claims 7-10 58

7. Claim 11 (Independent) 58

8. Dependent Claims 12, 13, 16, 17 59

9. Claim 14 ("The computer program product of claim 11, wherein the computer program product is provided as a software application for the media player.") and Claim 15 ("The computer program product of claim 11, wherein the computer program product is incorporated in the media player.") 59

E. Ground 5: Claims 1-17 Are Obvious Over Carmel in view of Galensky. 60

Table of Contents
(continued)

Page

1. Claims 1[e]/[6f]/11[e]) 60

2. Claims 2, 7, and 12. 62

F. Grounds 6 and 7: Claims 1-17 Are Obvious Over Carmel In View of Hill and Ravi and Carmel in View of Galensky and Ravi.....63

VIII. Secondary Considerations 68

IX. Conclusion 69

List of Exhibits

Exhibit No.	Description of Document
1001	U.S. Patent No. 9,729,594 B2 to Harold Edward Price (filed October 3, 2016, issued August 8, 2017)
1002	Declaration of Dr. Nathaniel Polish ("Polish")
1003	U.S. Patent No. 6,389,473 to Sharon Carmel et al. (filed March 24, 1999, issued May 14, 2002) ("Carmel")
1004	U.S. Patent No. 6,292,834 to Hemanth Srinivas Ravi et al. (filed March 14, 1997, issued September 18, 2001) ("Ravi")
1005	*Reserved*
1006	U.S. Patent No. 6,005,600 to Ralph D. Hill (filed October 18, 1996, issued December 21, 1999) ("Hill")
1007	U.S. Patent No. 6,845,398 to Duane Galensky et al. (filed August 2, 1999, issued January 18, 2005) ("Galensky")
1008	U.S. Patent No. 6,014,694 to Amir Aharoni et al. (filed June 26, 1997, issued January 11, 2000) ("Aharoni")
1009	U.S. Patent No. 5,867,230 to Feng Chi Wang et al. (filed June 30, 1997, issued February 2, 1999)
1010	U.S. Patent No. 6,637,031 to Phillip A. Chou (filed December 4, 1998, issued October 21, 2003)
1011	Shanwei Cen et al., Flow and Congestion Control for Internet Media Streaming Applications (1997)
1012	Jian Lu, Signal Processing for Internet Video Streaming: A Review (2000)
1013	H. Schulzrinne et al., Network Working Group Request for Comments: 2326, Real Time Streaming Protocol (RTSP) (1998)

List of Exhibits

Exhibit No.	Description of Document
1014	U.S. Patent No. 7,529,806 to Yevgeniy Eugene Shteyn (filed November 4, 1999, issued May 5, 2009)
1015	U.S. Patent No. 5,721,878 to Hal Hjalmar Ottesen et al. (filed June 7, 1995, issued February 24, 1998
1016	R. Fielding et al., Hypertext Transfer Protocol -- HTTP/1.1 (1999)
1017	Sam Iren and Paul D. Amer, The Transport Layer: Tutorial and Survey (1999)
1018	U.S. Patent No. 5,793,980 to Robert D. Glaser et al. (filed November 30, 1994, issued August 11, 1998)
1019	M.H. Willebeek-Lemair et al., Bamba – Audio and video streaming over the Internet (1998)
1020	Excerpts from David Austerberry, *The Technology of Video and Audio Streaming* (2004)
1021	Cannon DV Format, https://web.archive.org/web/19991013131445/http://canondv.com:80/shared/dvinfo/dvinfo2.html (1999)
1022	Alan T. Wetzel and Michael R. Schell, Consumer Applications of the IEEE 1394 Serial Bus, and a 1394/DV Video Editing System (1996)
1023	U.S. Patent No. 5,568,192 to Eric C. Hannah (filed August 30, 1995, issued October 22, 1996)
1024	U.S. Patent No. 5,402,170 to Kenneth A. Parulski et al. (filed August 31, 1992, issued March 28, 1995)
1025	Jean-Phillipe Martin-Flatin, Push vs. Pull in Web-Based Network Management (1999)

List of Exhibits

Exhibit No.	Description of Document
1026	Lixin Gao et al., Catching and Selective Catching: Efficient Latency Reduction Techniques for Delivering Continuous Multimedia Streams (1999)
1027	U.S. Patent No. 5,822,524 to Huey-Shiang Chen et al. (filed July 21, 1995, issued October 13, 1998)
1028	Sriram S. Rao et al., Comparative Evaluation of Server-push and Client-pull Architectures for Multimedia Servers (1996)
1029	*Reserved*
1030	*Reserved*
1031	’594 Patent Prosecution History File
1032	*Reserved*
1033	WAG Acquisition, L.L.C.’s Proposed Claim Constructions from *WAG Acquisition, L.L.C. v. Google LLC*, No. 6:21-cv-00816-ADA (W.D. Tex.), dated February 18, 2022
1034	*Reserved*
1035	*Reserved*
1036	*Reserved*
1037	*Reserved*
1038	*Reserved*
1039	Brad Hansen, The Dictionary of Multimedia (1997)
1040	Defendants Google LLC and YouTube, LLC’s Opening Claim Construction Brief from *WAG Acquisition, L.L.C. v. Google LLC*, No. 6:21-cv-00816-ADA (W.D. Tex.), Dkt. No. 37, filed March 14, 2022

List of Exhibits

Exhibit No.	Description of Document
1041	Declaration of Keith J. Teruya from *WAG Acquisition, L.L.C. v. Google LLC*, No. 6:21-cv-00816-ADA (W.D. Tex.), filed April 1, 2022
1042	Jonathan C. Soo, Live Multimedia over HTTP (1994)
1043	Plaintiff's Responsive Claim Construction Brief from *WAG Acquisition, L.L.C. v. Google LLC*, No. 6:21-cv-00816-ADA (W.D. Tex.), filed April 1, 2022
1044	*Reserved*
1045	Phil Karn and Craig Partridge, Improving Round-Trip Time Estimates in Reliable Transport Protocols (1988)
1046	Hari Balakrishnan et al., Improving TCP/IP Performance over Wireless Networks (1995)
1047	WAG Acquisition, L.L.C.'s Preliminary Infringement Contentions from *WAG Acquisition, L.L.C. v. Google LLC*, No. 6:21-cv-00816-ADA (W.D. Tex.), dated November 15, 2021
1048	Nasir Ghani and Sudhir Dixit, TCP/IP Enhancements for Satellite Networks (1999)
1049	S.M. Bellovin, Security Problems in the TCP/IP Protocol Suite (1989)
1050	Ashish Ahuja et al., Performance of TCP over Different Routing Protocols in Mobile Ad-Hoc Networks (2000)
1051	Toshihiko Kato et al., Design of Protocol Monitor Emulating Behaviors of TCP/IP Protocols (1997)
1052	Osama Tolba et al., Pure Java-based Streaming MPEG Player (1999)
1053	Chaman Sabharwal, Java, Java, Java (1998)

List of Exhibits

Exhibit No.	Description of Document
1054	Koji Sato et al., Dynamic Multimedia Integration with the WWW (1999)
1055	Simon S.Y. Shim et al., Multimedia Presentation Components in E-commerce (2000)
1056	U.S. Patent No. 5,802,312 to Mihal Lazaridis et al. (filed September 27, 1994, issued September 1, 1998)
1057	Original Complaint for Patent Infringement from *WAG Acquisition, L.L.C. v. Google LLC*, No. 6:21-cv-00816-ADA (W.D. Tex.), Dkt. No. 1, filed August 6, 2021
1058	Opening Claim Construction Brief of Amazon.com, Inc., Amazon Web Services, Inc., and Amazon.com Services, LLC from *WAG Acquisition, L.L.C. v. Amazon.com, Inc.*, No. 6:21-cv-00815-ADA (W.D. Tex.), Dkt. No. 37, filed March 11, 2022
1059	Plaintiff's Responsive Claim Construction Brief from *WAG Acquisition, L.L.C. v. Amazon.com, Inc.*, No. 6:21-cv-00815-ADA (W.D. Tex.), Dkt. No. 38, filed April 1, 2022
1060	List of Claims
1061	U.S. Patent No. 8,122,141 to Harold Edward Price (filed May 10, 2010, issued February 21, 2012)
1062	'594 YouTube Amended Contentions
1063	*Reserved*
1064	*Reserved*
1065	Service of Complaint on YouTube, Inc., *WAG Acquisition, L.L.C. v. Google LLC*, No. 6:21-cv-00816-ADA (W.D. Tex.), Dkt. No. 13, served

List of Exhibits

Exhibit No.	Description of Document
1066	Service of Complaint on Google LLC, *WAG Acquisition, L.L.C. v. Google LLC*, No. 6:21-cv-00816-ADA (W.D. Tex.), Dkt. No. 14
1067	*Curriculum Vitae* of Dr. Nathaniel Polish
1068	Comparison between the Current Petition and Petition in IPR2022-01411
1069	Joint Status Report, March 24, 2023, Case No. 2:21-cv-08230-JAK-E
1070	March 31, 2023 E-mail from Alex Patchen to Sarah Brooks stating that Patent Owner does not intend to oppose joinder

I. INTRODUCTION

Petitioner The Walt Disney Company, Disney Streaming Services LLC, Hulu LLC, and Netflix Inc. respectfully submits this Petition for *Inter Partes* Review of claims 1-17 ("the Petitioned Claims") of U.S. Patent No. 9,729,594 B2 ("'594 patent") (EX1001). Petitioner requests institution of *Inter Partes* review ("IPR") and a finding that all challenged claims are unpatentable.

II. MANDATORY NOTICES UNDER § 42.8(A)(1)

A. Real Parties-In-Interest under § 42.8.(b)(1)

The Walt Disney Company, Disney Streaming Services LLC, Disney Streaming Technology LLC, Disney Platform Distribution LLC, BAMTECH LLC, ESPN, Inc., Hulu LLC, and Netflix Inc. are the real parties-in-interest to this IPR petition.

B. Related Matters under § 42.8(b)(2)

The '594 patent is asserted in pending litigation involving the Petitioner: *WAG Acquisition, L.L.C. v. Google LLC*, No. 6:21-cv-00816-ADA (W.D. Tex.). The complaint in this related case was first served on August 12, 2021. (EX1065, EX1066.) The '594 patent is also the subject of four pending litigations listed below:

- *WAG Acquisition, L.L.C. v. The Walt Disney Company*, No. 2:21-cv-08230 (C.D. Cal., filed Oct. 18, 2021)
- *WAG Acquisition, L.L.C. v. Hulu LLC*, No. 2:21-cv-08242 (C.D. Cal., filed

Oct. 18, 2021)

- *WAG Acquisition, L.L.C. v. Netflix Inc.*, No. 6:21-cv-01083 (W.D. Tex., filed Oct. 18, 2021)
- *WAG Acquisition, L.L.C. v. Amazon.com, Inc.*, No. 6:21-cv-00815 (W.D. Tex., filed Aug. 6, 2021)

The '594 patent is also the subject of *The Walt Disney Company et al v. WAG Acquisition, LLC*, IPR2022-01346 (P.T.A.B.) (filed August 2, 2022) and *Google LLC v. WAG Acquisition, LLC,* IPR2022-01411 (P.T.A.B.) (filed August 12, 2022). This Petition is being submitted concurrently with a Motion for Joinder. Specifically, Petitioner requests institution and joinder with *Google LLC v. WAG Acquisition, LLC,* IPR2022-01411 ("the Google IPR Proceeding"), which the Board instituted on March 10, 2023. Petitioner has spoken with counsel of record for Google and WAG, and neither opposes joinder to the IPR2022-01411 petition. *See* EX10XX, Case Status Update. Petitioner submits Ex. 1068 (comparison between the current Petition and Petition in IPR2022-01411) as evidence that this Petition is substantially identical to the petition filed in the Google IPR Proceeding.

C. Lead and Back-Up Counsel under § 42.8(b)(3)

Petitioner provides the following designation of counsel.

LEAD COUNSEL	BACK-UP COUNSEL
Larissa S. Bifano (Reg. No. 59,051) larissa.bifano@dlapiper.com DLA Piper LLP (US) 33 Arch Street, 26th Floor Boston, MA 02110-1447 Tel: (617) 406-6000 Fax: (617) 406-6100	Thomas Fuller (Reg. No. 74,439) thomas.fuller@us.dlapiper.com DLA Piper LLP (US) 2000 University Ave Palo Alto, CA 94303-2214 Tel: (617) 833-2000 Fax: (650) 833-2001 Jennifer Nall (Reg. No. 57,053) Jennifer.nall@us.dlapiper.com DLA Piper LLP (US) 303 Colorado Street, Suite 3000 Austin, TX 78701-4653 Tel: (512) 457-7000 Fax: (512) 457-7001

D. Service Information for Patent Owner (PO) Attorney of Record

This Petition is being served by Priority Mail Express to the attorney of record for the '594 patent, Ernest D. Buff and ERNEST D. BUFF AND ASSOCIATES LLC, 231 Somerville Road, Bedminster, NJ 07921. Petitioner consents to electronic service at the addresses provided above for lead and back-up counsel.

III. FEE PAYMENT UNDER § 42.103

Petitioner requests review of 17 claims, with a $41,500 payment.

IV. REQUIREMENTS UNDER §§ 42.104 AND 42.108

A. Grounds for Standing

Petitioner certifies the ’594 patent is available for IPR and Petitioner is not barred or estopped.

B. Identification of Challenge and Statement of Relief Requested

Petitioner requests the Board institute IPR of claims 1-17 based on:

Ground	Claims	Basis for Challenge under §103(a)
1	1-17	Hill
2	1-17	Hill in view of Aharoni
3	1-17	Hill in view of Ravi
4	1-17	Carmel in view of Hill
5	1-17	Carmel in view of Galensky
6	1-17	Carmel in view of Hill and Ravi
7	1-17	Carmel in view of Galensky and Ravi

Submitted with this Petition is a Declaration of Nathaniel Polish, Ph.D. (EX1002) (“Polish”), a qualified expert.

C. Discretionary Denial is Not Appropriate Here

1. Discretionary Denial Under *General Plastic* is Not Appropriate

PO may argue that the ’594 patent is already at issue in proceedings initiated by different parties. The facts here, however, do not support a discretionary denial

based on those proceedings.

The Board has set forth seven factors that it considers in determining whether to exercise its discretion to deny a petition under 35 U.S.C. § 314(a) due to an earlier proceeding involving the same patent. *General Plastic Industrial Co., Ltd. v. Canon Kabushiki Kaisha*, IPR2016-01357, Paper 19 at 15-19 (Sept. 6, 2017) (precedential) ("General Plastic"). The *General Plastic* factors confirm that this Petition should be considered on the merits. As to the first factor, Petitioner is not a party, real party-in-interest, or privy to the other Patent Office proceedings and this is Petitioner's first challenge to the '594 patent, which "weighs especially heavily against a discretionary denial." *See Unified Patents, Inc. v. Certified Measurement, LLC*, IPR2018-00548, Paper 7 at 7-8 (PTAB Sept. 5, 2018).

The second to fifth factors here because Petitioner has never before challenged the '594 patent. *Id.* at 7-8 ("Once resolution of factor 1 indicates that Petitioner had not previously filed a petition against the same patent, factors 2-5 bear little relevance unless there is evidence in the record of extenuating circumstances such as a showing that there was a previous petitioner who challenged the same patent and that the previous petitioner and the current petitioner planned the staggered petitions.") (internal citation omitted). Petitioner has no relationship to the other challenge to the '594 patent. And while the Carmel and Hill references are common to both petitions, this petition includes additional prior art and grounds different than

the other petition.

As to the sixth factor, while the Board certainly has finite resources, instituting this petition would be no more burdensome than instituting any other petition.

And as to the seventh factor, there is no readily identifiable roadblock for the Board to issue a final determination within the statutory one-year limit. This petition is only being filed a few weeks after the other petition, and there is no reason both cannot be addressed according to the statutory deadlines.

Accordingly, the Board should reach the merits of this Petition, and institute trial.

2. The Board Should Not Exercise its Discretion Under 35 U.S.C. § 314(a) to Deny Institution

The Board should not discretionarily deny institution under § 314(a) for two reasons.

First, in accordance with the USPTO's most recent guidance, the Board should not deny institution because this "petition presents compelling evidence of unpatentability." (Memorandum from USPTO Director K. Vidal to Members of the PTAB, *Interim Procedure for Discretionary Denials in AIA Post-Grant Proceedings with Parallel District Court Litigation*, June 21, 2022, available at https://www.uspto.gov/sites/default/files/documents/interim_proc_discretionary_denials_aia_parallel_district_court_litigation_memo_20220621_.pdf.) Indeed, the fact that a related patent within the same family as the '594 patent—with numerous

claim limitations similar in substance to those challenged here—was subject to *inter partes* review and found unpatentable in view of some of the same prior art, supports the compelling nature of this petition. *See Webpower Inc. v. WAG Acquisition, LLC*, IPR2016-01238, Paper 28 (P.T.A.B. July 16, 2020).

Second, taken as a whole, the "*Fintiv*" factors weigh against exercising discretion. *Apple Inc. v. Fintiv, Inc.*, IPR2020-00019, Paper 11 (P.T.A.B. Mar. 20, 2020). ***Fintiv* Factors 3, 4, and 6 Favor Institution:** To the extent the Board does not deem the compelling evidence of obviousness controlling, at a minimum the strength of the obviousness case weighs in favor of institution under Factor 6. *See Fintiv, Inc.,* IPR2020-00019, Paper 11 at 14-16; *Sand Revolution II, LLC v. Continental Intermodal Group-Trucking LLC*, IPR2019-01393, Paper 24 at 13 (P.T.A.B. June 16, 2020). Moreover, the early status of the district court litigation (Factor 3) and Petitioner's willingness to enter into a stipulation to not pursue the same grounds in the district court litigation (Factor 4), also favor institution. *Sand Revolution II*, IPR2019-01393, Paper 24 at 11, 12. Indeed, other than exchanging initial contentions and claim construction briefing, the only discovery in the case thus far has related to venue. A claim construction hearing will not occur until at least August 31, 2022, and no expert discovery has begun.

***Fintiv* Factors 1 and 2 are Neutral and Even When Combined with Factor 5 Do Not Warrant Discretionary Denial:** The parties to the district court litigation,

which is preliminarily set for trial May 22, 2023, includes the petitioner here. However, if the Board institutes, Petitioner intends to move for a stay in the co-pending litigation. Given that Petitioner has not filed such a stay motion, and given that Petitioner is still awaiting resolution of a pending motion to transfer, any discussion of a stay (Factor 1) or the trial date (Factor 2) is speculative. *Sand Revolution II,* IPR2019-01393, Paper 24 at 7-10. Accordingly, these factors are neutral.

Finally, even if Petitioner's transfer motion is denied and a stay is not granted, the strength of this petition, Petitioner's willingness to forego pursuing the same grounds in the district court litigation, and the fact that the parties will be able to avoid any duplication of resources in the district court case given its early status, the overall weight of the factors weighs in favor of not exercising discretion to deny institution.

The merits of the Petition warrant consideration, and this IPR should be instituted.

3. Discretionary Denial Under 35 U.S.C. § 325(d) is Not Appropriate

This Petition does not present a situation in which "the same or substantially the same prior art or arguments previously were presented to the Office." 35 U.S.C. § 325(d). Although Carmel and Ravi were included in the Information Disclosure Statements submitted by the applicant, neither reference was discussed or otherwise

acknowledged by the examiner during prosecution.

V. OVERVIEW OF '594 PATENT

A. Level of Ordinary Skill

A person of ordinary skill in the art ("POSITA") as of the alleged priority date would have possessed at least a bachelor's degree in computer science or an equivalent field requiring learning computation principles, and two years of work experience in networking or streaming media systems, particularly audio and video, over the Internet. Additional education could compensate for less practical experience. Conversely, additional practical experience could compensate for less education. (Polish, ¶¶18-23.)

B. Priority Date

PO has asserted November 11, 1999 is the priority date for the challenged claims. (EX1047, 1.) Petitioner uses this date without conceding the claims are entitled to that date.

C. The Challenged Claims

This Petition challenges claims 1-17 of the '594 patent.

D. Claim Listing

Exhibit 1060 lists the claims, enumerating each element. Bracketed notations (*e.g.*, **[a]**, **[b]**, etc.) will be used to refer to individual limitations.

VI. CLAIM CONSTRUCTION

Claim terms have been proposed for construction by Petitioner, as

summarized in the below table. For purposes of this petition, Petitioner does not, at this time, contend that any term requires express construction. Petitioner's analysis accommodates even the narrowest versions of the constructions set forth below.

Disputed Term	Petitioner's Construction	PO's Construction
"as required to maintain about a predetermined number of media data elements"	Indefinite	Plain and ordinary meaning
"a predetermined number of media data elements"	"a specified number of media data elements, set prior to the start of playback of the audio or video program"	Plain and ordinary meaning
"the media source"	"the storage device or live source device from which the streaming material originates"	Plain and ordinary meaning

VII. THE CHALLENGED CLAIMS ARE OBVIOUS

As detailed below, claims 1-17 of the '594 patent are obvious in view of the identified prior art.

A. Summary and Date Qualification of the Prior Art

1. Carmel [EX1003]

Carmel, U.S. Patent No. 6,389,473, is titled "Network Media Streaming" and was filed March 24, 1999. A brief summary of Carmel is provided in Dr. Polish's declaration. (Polish, ¶¶75-81.)

2. Hill [EX1006]

Hill, U.S. Patent No. 6,005,600, is titled "High-Performance Player for Distributed, Time-Based Media," and was filed October 18, 1996. A brief summary of Hill is provided in Dr. Polish's declaration. (Polish, ¶¶82-90.)

3. Ravi [EX1004]

Ravi, U.S. Patent No. 6,292,834, is entitled "Dynamic Bandwidth Selection for Efficient Transmission of Multimedia Streams in a Computer Network" and was filed March 14, 1997. A brief summary of Ravi is provided in Dr. Polish's declaration. (Polish, ¶91-96.)

4. Aharoni [EX1008]

Aharoni, U.S. Patent No. 6,014,694, is entitled "System for Adaptive Video/Audio Transport over a Network," and was filed June 26, 1997. A summary of the Aharoni reference is provided in Dr. Polish's declaration. (Polish, ¶¶97-99.)

5. Galensky [EX1007]

Galensky, U.S. Patent No. 6,845,398, is entitled "Wireless Multimedia Player," and was filed August 2, 1999. A brief summary of Galensky is provided in Dr. Polish's declaration. (Polish, ¶¶100-103.)

B. Ground 1: Claims 1-17 Are Obvious Over Hill

1. Claim 1

a. "A method for operating a media player to receive and play an audio or video program, from a remote media source via a data connection over the Internet, the

method comprising:" (Claim 1 [preamble])

Hill discloses a "method for operating a media player" (workstation **104**) "to receive and play an audio or video program" ("audio and video information") "from a remote media source" (*i.e.*, source **122**) "via a data connection over the Internet[.]" (*See, e.g.*, EX1006, 2:25-28, 3:15-18, 3:27-56, including 3:29-32 ("workstation **104** may be a conventional personal computer, a high performance workstation, or dedicated hardware specifically suited for audio/video playback.") and 3:48-56 (audio/video data is "stored in a separate source **122**...be accessed either locally or via a network server" including "a site on the Internet."), and 4:35-37; *see also* Polish, ¶107.)

FIG. 1

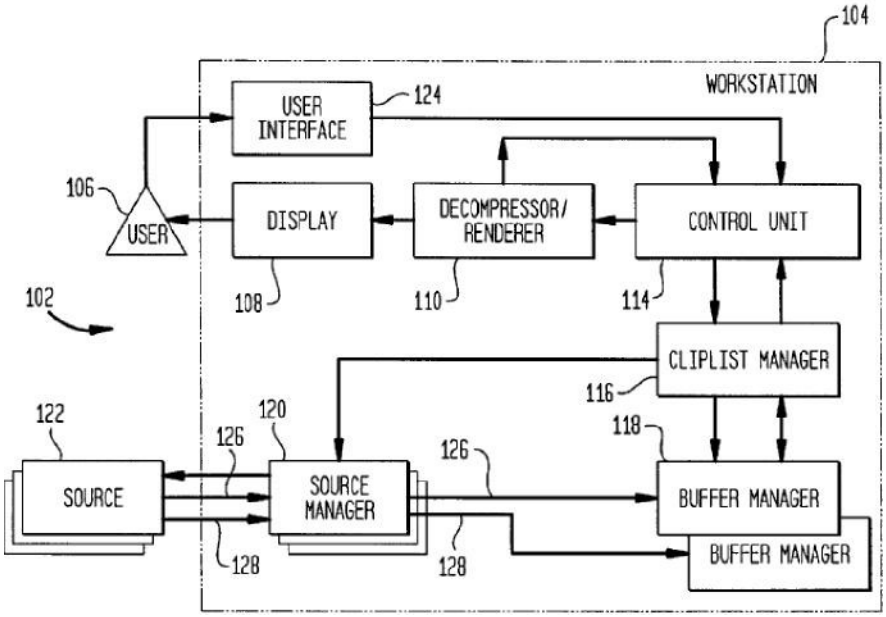

(EX1006, Fig. 1.)

b. "sending requests from the media player to the media

source via the data connection for one or more serially identified media data elements representing the audio or video program," (Claim 1[a(i)])

Hill discloses "sending requests from the media player to the media source via the data connection" (workstation **104** "requests frames from a particular source **122** via the appropriate source manager") "for one or more serially identified media data elements representing the audio or video program" (the "frames" in Hill are sequentially numbered units that represent a video program).

First, a POSITA would understand that each "frame" in Hill is a "media data element." (Polish, ¶109.) The '594 patent explains that media data elements are segments of the relevant media data. (*Id.*) Similarly, Hill teaches each frame is a segment of media data. (EX1006, 3:37-41 (video information "is broken into fundamental units called frames.").)

Second, Hill discloses the frames (media data elements) are "serially identified," both globally and within each clip. (*E.g.*, *id.*, 5:60-6:4 ("Frames may either be referenced according to their position within the global playback sequence (*i.e.*, global frame number), or according to their position within the clip from which they originate (*i.e.*, local frame number).").) The 20th frame occurs later in time than the 10th frame, and so on, exemplarily reflected in Figure 5A. (Polish, ¶110.) Likewise, Figure 7 shows that both the global frame number and local frame number for each clip proceed in a serial fashion from 1 to N. (*Id.*)

FIG. 7

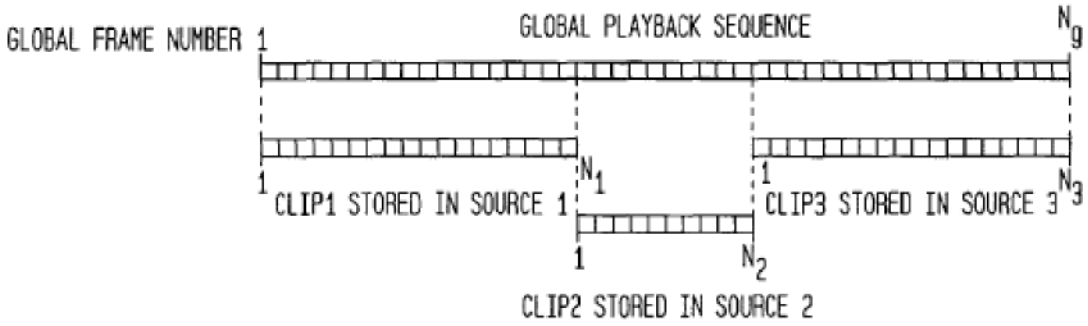

FIG. 5A

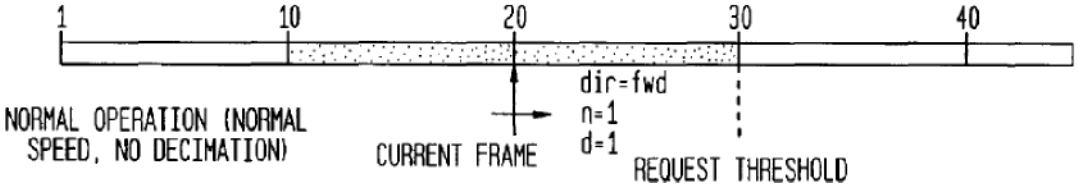

(EX1006, Figs. 7, 5A.)

Third, Hill teaches the frames are stored in one or more source(s) **122** (media source). (*Id.*, 3:44-56; *see also* Polish, ¶111.)[1]

[1] In district court, Petitioner and PO disagree on the construction of "media source." Petitioner contends the term means "the storage device or live source device from which the streaming material originates," while PO argues the term should be given its plan and ordinary meaning. (EX1040, 8.) The Petitioner's construction excludes from the scope of "media source" any intermediate network servers between the media source (which could be a live recording apparatus or a host server that stores

Finally, Hill teaches "sending requests from the media player to the media source via the data connection for one or more" frames. For example, to maintain a store of a certain number of frames during playback, Hill discloses that workstation **104** "requests frames from a particular source **122** via the appropriate source manager **120**" using the local frame number. (EX1006, 4:16-30, 6:7-16, Fig. 3 (steps 308-316), Figure 5A); *see also* Polish, ¶¶112-114.)

---

the media data) and the user's computer, while PO argues the "media source" is "whatever server the user computer connects to so as to obtain the underlying media data." (EX1058, 3-5; EX1059, 6-7.) This dispute does not affect the petition. Hill unambiguously discloses the source **122** "may be any type of digital memory, and may be accessed either locally or via a network server. Note that a source may be a site on the Internet." (EX1006, 3:51-56.) Hill thus discloses each parties' proposed construction of "media source" in the district court.

FIG. 1

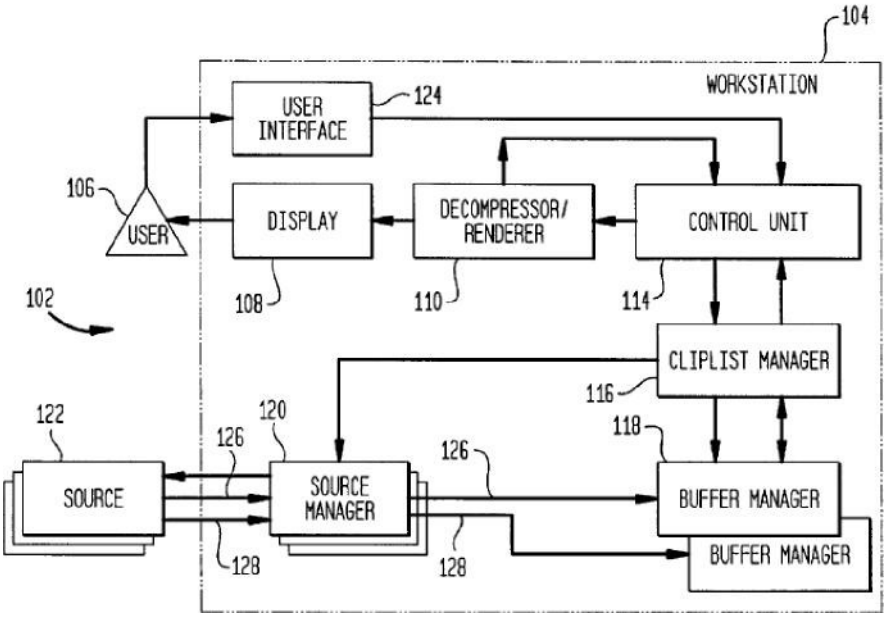

(EX1006, Fig. 1.)

The request for additional frames is sent "via the data connection," such as the Internet. (*E.g.*, EX1006, 3:53-56 ("Note that a source may be a site on the Internet."), 3:20-22 (referencing sources can be "network servers").)

c. "each media data element comprising a digitally encoded portion of the audio or video program and having a playback rate," (Claim 1[a(ii)])

Hill teaches "each media data element" (frame) comprises a "portion of the audio or video program." (*E.g.*, EX1006, 3:37-56.) Hill also teaches the frame is "digitally encoded." (*E.g.*, *id.*, 3:17-18, 3:27-28, 3:48-56, 4:22-24, 4:31-34, Claim 1 (all consistently referring to "digital" nature of network/system/data).) Hill discloses the buffer manager **118** "stores a limited number of frames in local digital

memory[.]" (*Id*., 4:8-11.) A POSITA would understand that frames of a movie sourced from a digital network and stored in digital memory would be "digitally encoded." (Polish, ¶117.)

Hill further discloses each frame has a "playback rate." A POSITA would understand the "playback rate" of a media file is the rate at which the media is played at normal speed, from beginning to end, through the computer. (Polish, ¶118.) Hill teaches storing and transmitting video on a frame-by-frame basis. In this context, each frame has a playback rate, *e.g.,* "the play rate is 24 frames per second"—which corresponds to a playback rate for each frame of 1/24th of a second. (EX1006, 7:20-

21.) The "play rate" is analogous to the "playback rate." (Polish, ¶118.)[2,3] In addition, it would be obvious that each frame would have a playback rate; a POSITA would understand a playback rate is an essential property of video frame data. (Polish, ¶118.)

d. "each request specifying one or more serial identifiers of the media data elements request;" (Claim 1[a(iii])

---

[2] PO submitted the declaration of Keith Teruya in support of its claim construction arguments in the district court. (EX1041.) Mr. Teruya stated "[a]s used in the specification, a POSITA would understand 'playback rate' to refer to the bitrate of the media data at a normal (1.0) rendition." (*Id.*, ¶26.) A POSITA would understand the rate at which media data is played could be measured in a number of ways, using a number of different metrics well known in the art. (Polish, ¶118, n.2.) As Mr. Teruya explained, "playback rate" is "described by a metric, which is not a data rate itself, but rather a characteristic of how the data is to be played back." (EX1041, ¶24.)

[3] In a litigation between PO and Amazon.com, the parties dispute the construction of "playback rate." (EX1059, 9.) Amazon.com argues the term means "a rate at which the data is encoded for playback to a user," while PO argues the term should be given its plain and ordinary meaning. (EX1058, 6-8.) These respective arguments do not change that Hill teaches limitation **1[a(ii)]**.

Hill discloses that workstation **104** "requests frames from a particular source **122** via the appropriate source manager **120**" using the clip number and/or at least the local frame number. (EX1006, 4:27-28, 6:7-16.) For example, Hill discloses that workstation **104** "converts the global frame number to a clip number and local frame number" and then "requests the frames from the appropriate source manager **120**." (*Id*., 6:8-15.) The source manager **120** then "retrieves the requested frame data from the source **122**." (*Id*., 6:14-16.)

Hill supplies an example demonstrating that requests for additional frames specify the frames by the clip number and local frame number. In the disclosed example, the system determines frames 21-31 need to be prefetched, but that frame 31 has not been requested. (EX1006, 7:33-46.) Accordingly, "the buffer manager **118** will then request global frame 31. This request is sent to the cliplist manager [**116**], which maps the global frame number to a clip number and local frame number and forwards the request to the appropriate source." (*Id*., 7:46-50.) Hill thus expressly teaches each request to a source for a particular frame (*e.g.*, frame 31) specifies the clip number and local frame number (serial identifier) of the desired frame (media data element). (*See also id.*, 12:7-44.) Nonetheless, a POSITA would consider it inherent or obvious that, in Hill, the request to the source **122** includes the clip number and/or at least the local frame number. (Polish, ¶¶121-122.)

e. "receiving each of the requested media data elements via the data connection, wherein the data connection has a data rate more rapid than the playback rate of the media data elements, and" (Claim 1[b(i)])

Hill teaches "receiving each of the requested media data elements via the data connection." Hill teaches source manager **120** "retrieves the requested frame data from the source **122**." (EX1006, 6:13-16.) And, as discussed above, the frame is received over a data connection, such as the Internet. (*E.g.*, *id.*, 3:48-56.)

Hill further teaches "the data connection has a data rate more rapid than the playback rate of the media data elements." A POSITA would understand a "data rate" is the rate at which data is carried across a data connection. (Polish, ¶126.) Hill teaches a system and method where the data rate of the connection between source **122** and workstation **104** has a rate "more rapid than the playback rate." For example, Hill discloses a scenario where the playback rate is 24 frames per second, and the data rate is 48 frames per second. (EX1006, 7:20-22.) A POSITA would understand the data rate in this scenario (48 frames/second) is "more rapid than" the playback rate (24 frames/second). (Polish, ¶126.)[4]

[4] PO and Amazon.com dispute the construction of "data rate." (EX1059, 10-12.) Amazon.com argues the term means "the actual rate at which the data connection delivers data to the requesting user system at any given time," while PO argues for

f. "each received media data element is received at a rate as fast as the data connection between the media source and the media player allows;" (Claim 1[b(ii)])

A POSITA would have found it obvious that Hill would receive frames from source **122** at workstation **104** as fast as the data connection allows. (Polish, ¶¶129-130.) As discussed above, Hill teaches sources **122** may be remote servers connected to workstations **104** via the Internet. (*E.g.*, EX1006, 3:48-56.) The most common communication protocol is TCP. It would be obvious to a POSITA that a source sending data via Internet protocol, such as TCP, would send the data as fast as the data connection allows. (Polish, ¶129.) PO's expert, Keith Teruya, opined that the "[a]s fast as the data connection...allows" limitation "requires nothing more than simply handing the data to the transport mechanism." (EX1041, ¶30.) It would be obvious that, given the disclosure of the Internet as a network to transfer data, Hill uses a transport mechanism, such as TCP, to send frames from sources **122** to workstation **104** via the Internet.[5]

---

plain and ordinary meaning. (EX1058, 8-11.) These arguments do not change the analysis that Hill teaches limitation **1[b(i)]**.

[5] In the context of Hill's discussion of "Inadequate Source Bandwidth," a condition Hill recognizes may occur, (*e.g.*, EX1006, 8:20-30), Hill contains some statements regarding frames being transmitted from sources **122** as fast as the play rate. (*E.g.*,

Furthermore, Petitioner argued during claim construction that a similar limitation in a related patent is indefinite. (EX1040, 8-11.) Petitioner argued that a POSITA would understand this limitation to encompass three possible transmission rates: "(1) the maximum possible capacity of the data connection, (2) the available bandwidth on a data connection, and/or (3) the permitted bandwidth for uses on a data connection." (*Id*., 8.) These three plausible interpretations render the limitation indefinite because the claim "does not provide an objective basis for those of skill in the art to make an informed and confident choice among the contending definitions." (*Id*.) Even if Petitioner's indefiniteness argument applies to the '594 Patent, it would not change that Hill renders obvious sending data as fast as the data connection allows. It would have been obvious to a POSITA that Hill renders obvious sending

---

EX1006, 8:21-22 ("The preceding discussion assumed that the sources **122** will always be able to provide frames at the normal play rate.").) This statement does not mean each frame is transmitted from sources **122** ***only*** at the play (playback) rate in every instance or any instance. Indeed, Hill's disclosures explicitly state that is system transmits frames from sources **122** more rapidly than the playback rate. (*E.g.*, EX1006, 7:20-24; Polish, ¶129, n.5.) Rather, this statement means that during normal operations, the sources will always be able to send frames ***at least as fast as*** the play rate, even when the source is bandwidth constrained.

data at either (1) the maximum possible speed supported by the protocol or (2) the maximum available speed of the protocol, taking into consideration external drains on the connection's bandwidth. (Polish, ¶130 (citing EX1019, 271-72 ("as fast as TCP/IP can move it") and EX1042, 0002 ("as fast as the TCP connection will accept")).) In addition, a POSITA would have considered it obvious from Hill to send data at (3) an artificially enforced maximum permitted data rate. (Polish, ¶130 (citing Hill, 3:22-26 (recognizing one purpose of Hill is to adapt to artificial bandwidth limits).) Therefore, Hill discloses "each received media data element is received at a rate as fast as the data connection between the media source and the media player allows."

g. "storing the received media data elements in a memory of the media player;" (Claim 1[c])

As discussed above, after the source manager **120** "retrieves the requested frame data from the source **122**" (EX1006, 6:14-16), the source manager **120** "transfers the requested frame to the buffer manager [**118**]." (*Id*., 6:30-34.) The buffer manager **118** "stores [the] frames in local digital memory, such as random access memory (RAM) or a local disk drive." (*Id*., 4:8-11; *see also id*., 6:58-67 (referencing frames being stored in buffer manager **118**), 11:17-28, 12:7-44.) Because buffer manager **118** is part of the media player on workstation **104**, a POSITA would understand the frames are stored "in a memory of the media player." (Polish, ¶¶132-134.)

h. "playing the received media data elements in series from the memory of the media player; and" (Claim 1[d])

Hill teaches displaying the frames to the user via display **108** (*i.e.*, playing the received media data elements) in series from buffer manager **118** (*i.e.*, from the memory of the media player). (*See* EX1006, 5:9-15, 3:27-45.)

Hill teaches that when the user indicates s/he wants to view the movie data, the control unit **114** forwards the frames from the memory of the buffer manager **118** to decompressor/renderer **110**, which "is responsible for decompressing the video and audio and presenting them to the display **108** ***in correct synchronization***." (*Id*., 3:67-4:2 (emphasis added), 4:7-8.) Furthermore, "control unit **114** is responsible for feeding frames to the decompressor/renderer **110** in the proper sequence." (*Id*., 4:2-4, 4:66-5:1.) A POSITA would understand displaying frames "in correct synchronization" after receiving the frames "in the proper sequence" means the frames are displayed "in series," *i.e.*, one after the other in the correct order. (Polish, ¶136; EX1006, Fig. 7.)

i. "as the received media data elements are played, the media player automatically sending additional requests for subsequent media data elements for storage in the memory of the media player as required to maintain about a predetermined number of media data elements in the memory of the media player during playing." (Claim 1[e])

First, Hill teaches that as the media data elements (frames) are played, the

media player automatically sends additional requests for subsequent frames. Hill teaches a prefetching process that occurs as buffer manager **118** provides frames to the control unit **114** (via cliplist manager **116**) for subsequent playback via the display **108**. At step 212, "buffer manager **118** provides a [requested] frame to the cliplist manager **116**...then refills its buffers with new frames as they are needed. This refill operation is critical to the present invention...." (EX1006, 5:10-15; Polish, ¶139-142.)

Hill further teaches that when the buffer manager **118** sends a frame to control unit **114** via cliplist manager **116**, "two paths" are followed. In one path, the buffer manager continues receiving requests from control unit **114** and continues providing frames for playback. (EX1006, 5:44-46, Fig. 2.) In the second path, the buffer manager requests new future frames to fill the buffer to the request threshold. (*Id*., 5:44-46, Fig. 3.) These two paths "are performed concurrently." (*Id.*, 5:46-47.) In other words, the buffer manager **118** sends frames to be played out ***while*** it requests future frames to fill the buffer up to the request threshold. Hill thus teaches prefetching future frames occurs "as the received media data elements are played." (Polish, ¶143.)

Second, Hill teaches maintaining a "request threshold"—"the optimum number of future frames stored in the buffer at any given time"—which is "determined based on the characteristics of a particular system." (*Id.*, 6:58-67, *see*

also Fig. 4A.) A POSITA would understand this "request threshold" corresponds to "a predetermined number of media data elements in the memory of the media player during playing." (Polish, ¶¶144-145.)

Third, Hill teaches that additional requests for subsequent frames are sent as required to maintain about the request threshold. In Hill, the buffer manager **118** keeps track of the "buffer fill level," which "refers to the number of future frames currently being stored in the buffer manager **118**[.]" (EX1006, 6:60-62.) As frames are played, the buffer manager attempts to maintain the "buffer fill level" at the "request threshold." (*Id*., 6:58-7:32.) For example, under normal operation, if the buffer fill level is less than the request threshold an additional frame or frames will be requested. (*Id*., 7:4-24.)

Hill thus teaches requesting additional frames (*i.e.*, additional requests for subsequent media data elements) to store in buffer manager **118** (*i.e.*, for storage in the memory of the media player) until the number of future frames stored in the buffer manager **118** equals the request threshold, such as 10 future frames (*i.e.*, as required to maintain about a predetermined number of media data elements in the memory of the media player).

There are several claim construction disputes relating to claim limitation **1[e]**. These claim construction arguments do not affect the obviousness analysis.

First, the parties dispute the construction of "as required to maintain about a

predetermined number of media data elements." Petitioner contends this term is indefinite, while PO argues for plain and ordinary meaning. (EX1040, 4-6.) Petitioner explains the term is indefinite because the "claims, specification, and extrinsic record fail to provide sufficient guidance as to the numerical range that 'about' encompasses." (EX1040, 4; *see also Intel Corp. v. Qualcomm Inc.*, 21 F.4th 801, 813 (Fed. Cir. 2021) ("indefiniteness does not necessarily preclude the Board from addressing the patentability of the claims on section 102 and 103 grounds"); *GN Hearing A/S v. Oticon A/S*, IPR2017-01926, Paper 7 (P.T.A.B. March 9, 2018) (IPR is instituted despite Petitioner arguing the patent should be indefinite for using a term of degree).) Petitioner's position does not impact this ground because Hill clearly teaches a "request threshold" which "represents the optimum number of future frames stored in the buffer at any given time." (EX1006, 6:63-65.) There is no question storing an "optimum number of future frames" renders obvious maintaining "about a predetermined number of media data elements." (Polish, ¶145.)

Second, the parties' disagreement over the construction of the term "a predetermined number of media data elements" is not relevant for the purposes of this petition. The crux of the dispute involves the point in the streaming process the number of media data elements must be predetermined: Petitioner contends the number must be predetermined "prior to the start of playback," while PO includes a

later time period, prior to sending additional requests *after* playback has started. (EX1043, 9-10.) Hill teaches the "request threshold" is set prior to any data being played, thus satisfying both parties' constructions. A POSITA would consider it inherent and/or obvious from Hill that the "request threshold" is determined ***prior to start-up*** because, for example, otherwise the buffer manager would fill continuously. (Polish, ¶¶146-147.) The request threshold is a cap on the number of future frames that should be stored in the buffer manager **118**, and this number would naturally be set prior to start up, based on "the characteristics of a particular system." (EX1006, 6:63-67.)

Therefore, a POSITA would understand Hill satisfies the "a predetermined number of media data elements" according to both parties' proposed constructions. (Polish, ¶¶148-149.) The parties' argument creates no ambiguity concerning the analysis of Hill in relation to claim limitation **1[e]**.

2. Claim 2: "The method of claim 1, further comprising maintaining in the memory of the media player a record identifying the last media data element received and stored by the media player."

As discussed above, Hill discloses that the buffer manager **118** identifies and requests the global frame number of the next frame it needs. To do so, a POSITA would understand that buffer manager **118** must necessarily keep a record of the last frame received. (Polish, ¶¶150-151.)

Hill provides an example of the buffer manager **118** keeping a record of the

last frame it received. If, for example, "control unit **114** requests global frame 20," the buffer manager **118** provides global frame 20 and then checks if the buffer fill level is below the request threshold. (EX1006, 7:39-43.) The buffer manager does this "by checking to see if it has frames 21 through 31." (*Id*., 7:43-45.) Once it detects that a certain frame is missing–in this example, frame 31– "the buffer manager **118** will then request global frame 31." (*Id*., 7:46-47.) The only way the buffer manager **118** could detect which frame is missing is if it has a record of all frames received including the last frame–in this case, frame 30. (*See also id*., 12:27-34 ("...the buffer manager **118** will check to see if global frames 96 through 106 ***are currently being stored***...") (emphasis added).) This capability would be inherent or obvious to a POSITA as a necessary function of Hill's buffer manager **118**. (Polish, ¶152.)

3. Claim 3: "The method of claim 1 wherein the serial identifiers are sequential."

As discussed above, the "serial identifier" of a frame is the global frame number or the clip number and local frame number.[6] Hill teaches that these serial identifiers are sequential. (*See, e.g.*, EX1006, 5:66-6:2, Fig. 7 (showing global and local frame numbers starting at 1 and going up sequentially).) It would be apparent

[6] The global frame number and clip number/local frame number are different ways to represent the same identification of each frame.

or obvious to a POSITA that the frame numbers are "sequential." (Polish, ¶¶154-155.)

FIG. 7

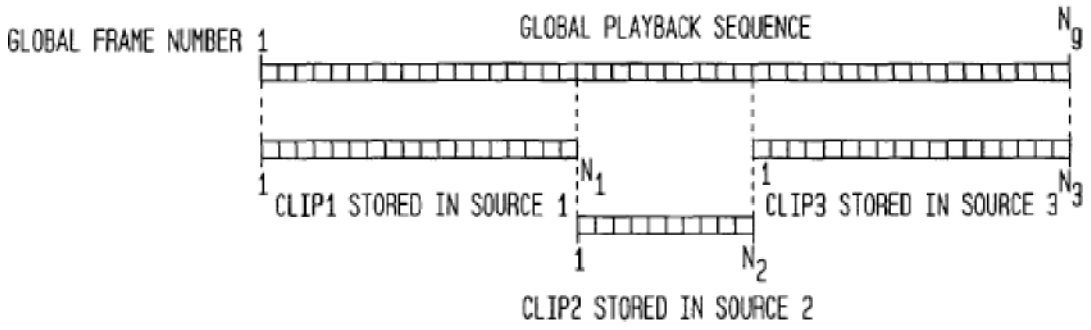

(EX1006, Fig. 7.)

4. Claim 4 ("The method of claim 1, wherein the receiving is via a reliable transmission protocol.") and Claim 5 ("The method of claim 4, wherein the reliable transmission protocol is TCP.")

As discussed above for claim 1, Hill teaches workstations **104** are connected to sources **122** via a network such as the Internet. (EX1006, 3:48-56.) A POSITA would find it obvious that the Transmission Control Protocol (TCP) could be used by the network. By the priority date of the '594 patent, TCP was widely known and used in the art and was, indeed, the most common transfer protocol used over the Internet. (*See* Polish, ¶156.) It would have therefore been obvious for Hill's system to use TCP, which is a reliable transmission protocol.

Hill therefore renders obvious claims 4 and 5.

5. Claim 6 (Independent)

For the purposes of this petition, claim 6 is materially the same as claim 1 except claim 6 written as a system/device for performing the method of claim 1. (*See, e.g.*, Polish, ¶¶158-159 (providing side-by-side comparison).)

Claim 6 presents no material differences from claim 1 in terms of the basic functions it recites. For purposes of claim 6, as explained in connection with the preamble of claim 1, the "device comprising a media player" is workstation **104**.

With respect to claim **6[a]**, Hill's "device comprising a media player" includes "a processor, memory accessibly to the processor, and a data connection[.]" Hill teaches workstation **104** "may be a conventional personal computer, a high performance workstation, or dedicated hardware specially suited for audio/video playback." (EX1006, 3:29-32.) It was well known in the prior art that a conventional personal computer or workstation would including a processor, memory accessible to the processor, and a data connection. (Polish, ¶160.) The data connection would be, for example, connection to the Internet, which Hill clearly teaches. (EX1006, 3:55-56.)

For several limitations, claim 6 broadly recites "a machine-readable, executable routine containing instructions to cause" the processor or media player to perform a designated function. These limitations are not inventive and would have been understood by a POSITA to be inherent or obvious from the functionality of a

computer system designed to perform the designated function. (Polish, ¶161.)

For example, with respect to claim limitations **6[b]** through 6**[f]**, it would be obvious to a POSITA that the media player (*e.g.*, in workstation **104**) disclosed by Hill includes "a machine-readable, executable routine containing instructions to cause the processor to" send requests to sources **122** for media data elements (frames), receive frames from the source **122**, and store and playback those frames. (Polish, ¶¶162-166.) Hill teaches how the various components of the media player in workstation **104** work together to request, receive, store, and play media data elements from source **122**. (*E.g.*, EX1006, 3:57-4:34, 4:57-5:21, 6:35-7:56.) It would be obvious to a POSITA that these different components would include hardware and/or software comprising "a machine-readable, executable routine containing instructions" to perform the described functions. The substantive details of this capability of these components were analyzed in the discussion of claim limitations **1[a]** through **1[e]**, which is incorporated here.

6. Dependent Claims 7-10

For the purposes of this petition, claims 7 through 10 are materially the same as claims 2 through 5, except written as system claims instead of method claims. (*See, e.g.*, Polish, ¶¶167-168 (providing side-by-side comparison).)

Because Hill renders obvious claim 6 just as it renders obvious claim 1, claims 7 through 10 are thus obvious for the same reasons as claims 2 through 5.

7. Claim 11 (Independent)

For the purposes of this petition, claim 11 is materially the same as claim 1 except claim 11 is written as a "computer program product" programmed to perform the method recited in claim 1. (*See, e.g.*, Polish, ¶¶170-171 (providing side-by-side comparison).)

Claim 11 presents no material differences from claim 1 in terms of the basic functions it recites. For purposes of claim 11, the "computer program product...comprising a non-transitory computer readable storage medium having program instructions embodied therewith" corresponds to the software and hardware of Hill's workstation **104** that is programmed to carry out the method outlined in claim 1. As discussed above, in reference to claim 6, a POSITA would deem it inherent or obvious from Hill to use a "computer program product...comprising a non-transitory computer readable storage medium having program instructions embodied therewith."

Accordingly, for the reasons discussed with respect to independent claims 1 and 6, Hill renders obvious claim 11.

8. Dependent claims 12, 13, 16, 17

For the purposes of this petition, claims 12, 13, 16, and 17 are materially the same as claims 2 through 5. (*See, e.g.*, Polish, ¶¶173-174 (providing side-by-side comparison).)

Because Hill renders obvious claim 11 just as it renders obvious claim 1, claims 12, 13, 16, and 17 are thus obvious for the same reasons as claims 2 through 5.

9. Claim 14 ("The computer program product of claim 11, wherein the computer program product is provided as a software application for the media player.") and Claim 15 ("The computer program product of claim 11, wherein the computer program product is incorporated in the media player.")

Claims 14 and 15 recite the different ways the computer program product recited in claim 11 may be implemented in a user computer. It would be obvious to a POSITA that Hill's system could be either provided as a software application that could be used by a personal computer's media player or incorporated into a media player on a personal computer. (Polish, ¶176.) By the '594 patent's priority date, it was well-known that computer programs could be downloaded as specialized software applications. The internal components of Hill's client-side media player, from the user interface **124** and display **108**, to the source manager **120**, are neatly cabined and could be easily implemented either via a software application used by a media player or as components of a media player architecture. (*Id*.) There is nothing inventive about how the '594's disclosed media player is implemented on a computer; each arrangement recited in claims 14 and 15 would have been readily understood and obvious to a POSITA. (*Id*.)

C. Grounds 2 and 3: Claims 1-17 Are Obvious Over Hill in view of Aharoni and Hill in view of Ravi.

Ground 2 incorporates Ground 1's analysis of Hill alone but adds Aharoni's teachings for limitations **1[b(ii)]/6[c(ii)]/11[b(ii)]** and claims 4, 5, 9, 10, 16, and 17. Accordingly, only claim limitations **1[b(ii)]/6[c(ii)]/11[b(ii)]** and claims 4, 5, 9, 10, 16, and 17 are addressed in the discussion below. Ground 3 also incorporates Ground 1's analysis of Hill but instead adds Ravi's teachings for the same limitations. Considering the below analysis of these limitations and Ground 1's analysis of the remaining limitations and claims, claims 1-17 are obvious based on Hill in view of Aharoni and Hill in view of Ravi.

Limitations **1[b(ii)]/6[c(ii)]/11[b(ii)]** recite each received media data element "is received at a rate as fast as the data connection between the media source and the media player allows." Claims 4, 9, and 16 recite the receiving is via "a reliable transmission protocol," and Claims 5,10, and 17 specify that the reliable transmission protocol is TCP.

As discussed in Ground 1, using TCP, a reliable transfer protocol that sends data as fast as the connection allows, is obvious based on Hill and the understanding of a POSITA. However, to the extent using TCP is not obvious based on the knowledge of a POSITA, using TCP is taught by Aharoni and Ravi and it would have been obvious to incorporate this teaching into Hill. (Polish, ¶179, ¶¶192-193.) It would have been understood by a POSITA that Aharoni's and Ravi's use of HTTP

and/or TCP teaches or renders obvious sending data at either (1) the maximum possible speed supported by the protocol, or (2) the maximum available speed of the protocol, taking into consideration external drains on the connection's bandwidth. (EX1008, 6:37-40; 6:52-54; 7:31-34; EX1004, 6:32-47; Polish ¶192.) In addition, a POSITA would recognize both references disclose (3) an artificially enforced maximum permitted data rate as the systems can set varying minimum and maximum data rates. (EX1008, 6:37-40; 6:52-54; 7:31-34; EX1004, 6:32-47; *see also* Polish, ¶¶180-183; ¶193.)

Aharoni teaches a system relating "generally to transport of video and audio information over networks and more particularly...to adapting the transport of video and audio information over IP networks having varying bandwidth capacities." (EX1008, 1:5-9.) Aharoni teaches "compressing a raw video source into a plurality of frames" and sending the frames "over the network channel" to the clients 22 for decompression/display. (*Id*., 2:54-65; 6:33-8:40.)

Aharoni teaches its system "has application to any type of network including those that utilize the Internet Protocol (IP) such as the Internet or other TCP/IP networks." (EX1008, 2:12-15; 6:37-40; 6:52-54; 7:31-34; 7:39-43.) Aharoni discloses some frames of video/audio data "are sent using a reliable mechanism... such as TCP[.]" (*Id*., 9:64-66.) Aharoni thus teaches sending video data from a server to a client device using TCP, which is a reliable transmission protocol.

(Polish, ¶183.)

Ravi teaches a multimedia streaming method wherein "the client computer includes a playout buffer, and the transmission rate [from the server to the client] is dynamically matched to the available bandwidth capacity of the network connection between the server and the client computer." (EX1004, 3:11-14.) Ravi teaches transmitting packets of media data from a server to a client computer and selecting a transmission rate to "match the...bandwidth capacity of the network connection." (*Id*., 6:43-44; *see also* Polish, ¶192.)

A POSITA would understand that Ravi's system sends data "as fast as the data connection...allows." (Polish, ¶¶192-193.) If the transmission rate "matches" the capacity of the data connection's bandwidth, the transmission rate is "as fast as" the data connection allows.

Hill in view of Aharoni and Hill in view of Ravi thus render obvious limitations **1[b(ii)]/6[c(ii)]/11[b(ii)]**and claims 4, 5, 9, 10, 16, and 17.

<u>Manner, Rationale, and Motivation to Combine</u>: It would have been obvious for a POSITA to combine Hill with Aharoni, predictably resulting in the media streaming and playback system of Hill that uses Aharoni's method of transporting frames using TCP. (Polish, ¶185.) A POSITA would have known that using Aharoni's method of streaming video/audio data via TCP with Hill's media streaming system would be successful. (Polish, ¶¶185-187.)

Hill and Aharoni are analogous references in the field of streaming media from servers to client computers. Hill and Aharoni teach similar systems. Both systems are advantageous in networks "having varying bandwidth capacities." (Polish, ¶186.) Hill and Aharoni both disclose breaking a stream of audio/video data into frames and transmitting frames over network to client devices for playback. (EX1006, 3:37-56; EX1008, 2:54-3:61, 4:35-5:12.) Hill and Aharoni are thus analogous references and disclose similar process (streaming media over internet networks) that are implemented in similar environments (when network connections have varying bandwidth capability).

A POSITA would have been motivated to adopt Aharoni's teachings of sending data via TCP for Hill's streaming and playback system. As a well-known and reliable transport protocol, a POSITA would have been motivated to use such a protocol in Hill's system, where ensuring frames of movie data arrive to client workstations in a reliable manner would have been advantageous. (Polish, ¶187.)

Similarly, it would have been obvious for a POSITA to combine Hill with Ravi, predictably resulting in the media streaming and playback system of Hill that uses Ravi's efficient and reliable method of transmitting frames by matching the transmission rate to the available bandwidth. (Polish, ¶¶194-197.) A POSITA combining Ravi's transmission methods with Hill's media streaming and playback system would be successful. (Polish, ¶197.)

Hill and Ravi are analogous references in the field of streaming media from servers to media players on personal computers. Hill explains its system relates to "playing movie data held in ***various storage devices*** with varying bandwidth capabilities, where the movie player adapts to these varying conditions." (EX1006, 1:7-11 (emphasis added).) Ravi likewise states its methods "relate[] to multimedia communications" and more particularly to "delivery of multimedia streams over a ***diverse computer network***[.]" (EX1004, 1:55-60 (emphasis added).) Ravi's system is substantially similar to Hill's: it discloses a stream server that is "coupled to client computer 240 via a computer network [such as] the internet." (*Id*., 5:43-51.) Ravi and Hill are thus analogous references and disclose similar processes in the field of streaming media data, particularly multimedia data, over the Internet. (Polish, ¶195.)

A POSITA would have been motivated to adopt Ravi's method of reliably streaming media data across the internet for Hill media streaming system. (Polish, ¶196.) Hill recognizes the problem of limited bandwidth. (EX1006, 1:19-27.) Hill attempts to solve this problem by limiting the number of requests the media player makes to sources **122** to not overload the sources, particularly when the sources are struggling with low bandwidth. (Polish, ¶196.) Ravi provides an additional and more effective solution to low bandwidth, which is modulating the rate to match the bandwidth capacity. It would be natural for a POSITA to combine Hill's system with Ravi's dynamic method of matching the transmission rate to the available

bandwidth. (*Id*.) Hill explicitly suggests Ravi's method could be readily adopted, characterizing its system as "playing movie data held in various storage devices with ***varying bandwidth capabilities***, where the movie player ***adapts to these varying conditions***." (EX1006, 1:7-11 (emphasis added).) A POSITA would have looked to Ravi's detailed disclosure of multimedia transmission techniques. (Polish, ¶196.)

A POSITA would have had a reasonable expectation of success in modifying Hill to employ Ravi's dynamic packet transmission techniques. (Polish, ¶197.) Hill and Ravi disclose substantially similar systems that carry out analogous streaming processes. Implementing Ravi's teachings into Hill's system would involve nothing more than routine adaptions to components in Hill's structure. (*Id*.) In particular, workstation **104** in Hill's system would be modified to have the capability to compute "performance variables" and "average client packet computational rate[,]" as disclosed in Ravi, to determine whether "the data packets [are] arriving at [workstation **104**] at a faster, equal or slower rate than [workstation **104**] is able to decompress and render the data packets." (EX1004, 11:15-26.) This would be well within the skills of a POSITA. (Polish, ¶197.)

For the reasons discussed above and in Ground 1, Hill in view of Aharoni and Hill in view of Ravi render obvious claims 1-17.

D. Ground 4: Claims 1-17 Are Obvious Over Carmel in view of Hill.

1. Claim 1

a. "A method for operating a media player to receive and play an audio or video program, from a remote media source via a data connection over the Internet, the method comprising:" (Claim 1 [preamble])

Carmel discloses a "method for operating a media player" (a Java applet or plug-in on Web browsers on clients **30**) "to receive and play an audio or video program" ("multimedia"), "from a remote media source" (transmitting computer **34** and server **36**) "via a data connection over the Internet" ("over network **28**" which "preferably comprises the Internet"). (*E.g.*, EX1003, Abstract, 1:10-12, 2:1-4, 6:28-31, 6:36-37, 6:36-40, 7:5-9, 7:14-17, 10:24-34, Figs. 2, 6A; Polish, ¶¶200-203.)

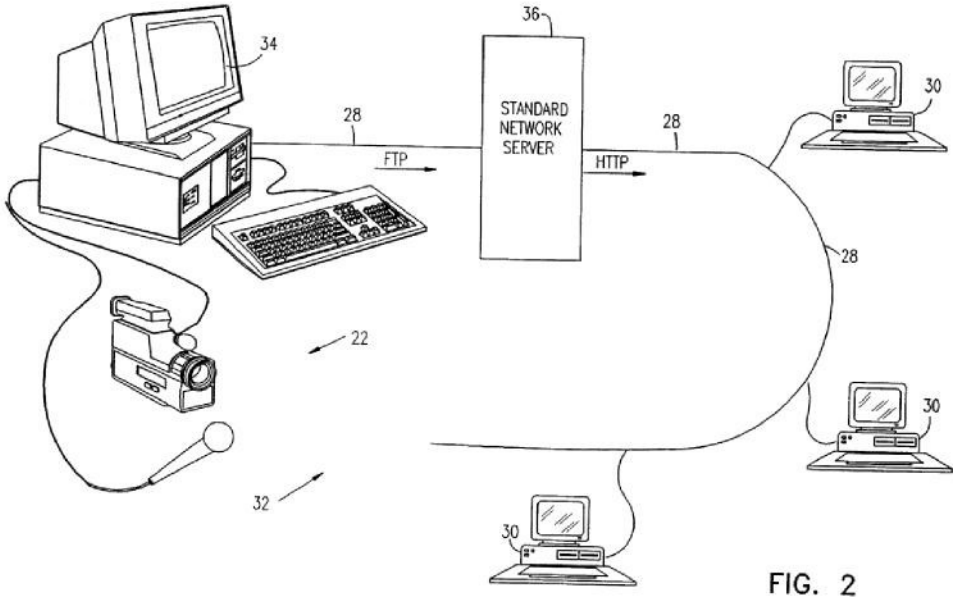

(EX1003, Fig. 2.)

b. "sending requests from the media player to the media source via the data connection for one or more serially identified media data elements representing the audio or video program," (Claim 1[a(i)])

Carmel discloses "sending requests from the media player to the media source via the data connection" (clients **30** send requests over network **28**) "for one or more serially identified media data elements representing the audio or video program" (slices/files **42**, **46**, **48**).

First, a POSITA would understand that each "slice" of the data stream **40** corresponds to a "media data element." (Polish, ¶206.) The '594 patent explains media data elements are segments of the media data provided to the server system. (Polish, ¶206.) Similarly, Carmel teaches "[e]ach slice contains a segment of video and/or audio data, corresponding to a respective, successive time interval labeled T_1, T_2, T_3, etc." as shown in FIG 3A below. (EX1003, 7:23-25, Fig. 3A.)

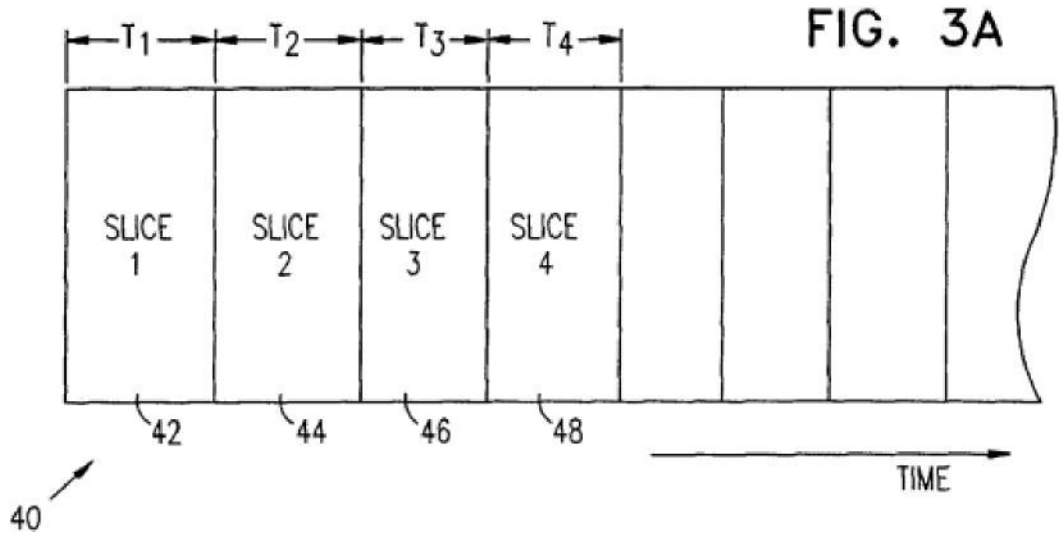

Second, Carmel further discloses the data slices (*i.e.*, media data elements) are serially identified. Carmel discloses that "[e]ach slice is preferably assigned a respective slice index." (*Id.*, 2:6-7, Abstract ("The slices are encoded in a corresponding sequence of files, **each file having a respective index**...") (emphasis added), 3:33-34.) "[C]omputer **34** stores each slice as a corresponding file, having a running slice index 1, 2, 3...N." (*Id.*, 7:27-28.) And the slices are identified serially (slice 1 first, slice 2 second, etc.). (Polish, ¶¶207-208.)

Third, Carmel teaches "sending requests from the media player to the media source via the data connection for one or more" slices. (Polish. ¶209.) When clients **30** connect to the server **36** (via the Java applet or plug-in over the Internet), the client "first reads the index file [listing available slices] in order to identify at what point in stream **40** to begin and start receiving the data stream." (EX1003, 8:1-5, and 7:62-64, 10:24-54.) Carmel teaches the client **30** can choose to begin downloading the most recently uploaded data slice and requests that data slice be transmitted from server **36**, or that a user "may choose to begin downloading data stream **40** from an earlier point in time[.]" (*Id.*, 8:7-9.) In either scenario, the client **30** selects the data slice to download and requests that data slice be sent from server

36 (i.e., the media source).[7] (*Id.*, 10:42-48.) Carmel Figure 6A confirms this process is repeated for each slice (see below).

c. "each media data element comprising a digitally encoded portion of the audio or video program and having a playback rate," (Claim 1[a(ii)])

Carmel teaches computer **34** produces a "stream of broadcast data **40**" comprising "a series of data slices **42**, **44**, **46**, **48**, etc." where the data stream **40** is encoded prior to the stream being sliced. (*E.g.*, EX1003, 7:19-25, 11:23-38, Figs. 5, 7.) Carmel thus teaches each data slice (media data element) is a digitally encoded segment of video and/or audio data. (Polish, ¶212.)

Carmel also discloses that each slice has a playback rate. A POSITA would understand that "playback rate" of a media file is the rate at which the media is played at normal speed, from beginning to end, through the computer. (Polish,

[7] As discussed for Ground 1, the parties dispute the construction of "media source." For similar reasons as explained in Ground 1, the dispute does not affect the analysis of Carmel. Server **36** meets either construction of "media source." Server **36** is the storage device "from which the streaming material originates," as only after the data is passed to server **36** from computer **34** is the data ready to be transmitted.

¶213.)[8] A POSITA would understand that a slice of audiovisual data, such as a segment of a video or a segment of an audio recording, would naturally have a playback rate, *i.e.,* the rate at which that segment of video or audio plays at normal speed from beginning to end. (Polish, ¶¶213-214.)

d. "each request specifying one or more serial identifiers of the media data elements requested;" (Claim 1[a(iii)])

Carmel teaches that each request from client **30** for a data slice specifies the slice index of the data slice the client wants to play. (EX1003, 8:1-5, 8:18-31, 10:24-54; Polish, ¶¶217-221.) Carmel teaches the client **30** may request the most recent data slice in the stream, or a data slice that occurs earlier in the stream. (*Id*.)

In both options, the request for a particular slice of data stream **40** specifies the serial indicator (slice index) of the requested slice. (Polish, ¶220.) And in both options, Carmel Figure 6A confirms this process is repeated for each slice. (Polish, ¶221.)

---

[8] In a litigation between PO and Amazon.com, the parties dispute the construction of "playback rate." *WAG Acquisition, L.L.C. v. Amazon.com, Inc.*, No. 6:21-cv-00815 (W.D. Tex. 2021). Amazon.com argues the term means "a rate at which the data is encoded for playback to a user," while PO argues the term should be given its plain and ordinary meaning. (EX1058, 6-8.) These respective arguments do not change the analysis that Carmel teaches limitation **1[a(ii)]**.

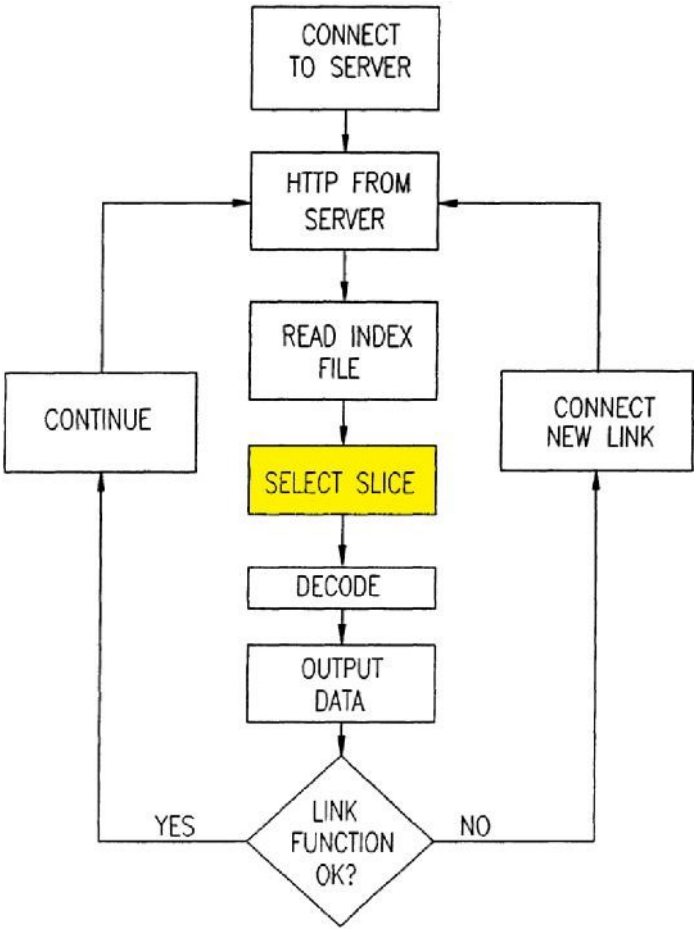

(EX1003, Fig. 6A (highlighting added).)

e. "receiving each of the requested media data elements via the data connection, wherein the data connection has a data rate more rapid than the playback rate of the media data elements, and" (Claim 1[b(i)])

Carmel discloses "receiving each of the requested media data elements via the data connection." After the client **30** requests a data slice, client **30** "begins to download the data stream[.]" (EX1003, 8:1-3, 7:4-5, 8:32-33, 10:24-54.) The client **30** downloads the data stream via a data connection, such as the Internet. (*E.g.*, *id.* 2:11-15, 6:30-31, 7:5-9; *see also* Polish, ¶224.)

Carmel further teaches "wherein the data connection has a data rate more rapid than the playback rate of the media data elements." A POSITA would understand a "data rate" is the rate at which data is carried across a data connection.[9] (Polish, ¶¶225-226.) Therefore, a data connection has a data rate "more rapid than the playback rate of the one or more media data elements sent via that connection" when the rate of sending a given multimedia file across a data connection (such as the Internet) is more rapid than the rate at which the given multimedia file is subsequently played at normal speed. (Polish, ¶226.) Carmel discloses multiple ways its system satisfies this claim limitation.

First, under normal operation, Carmel teaches that "the **data rate** should be generally **equal to or faster** than the **rate at which the data are generated at the**

[9] In the litigation between PO and Amazon.com, Amazon.com argues the term means "the actual rate at which the data connection delivers data to the requesting user system at any given time," while Patent Owner argues the term should be given its plain and ordinary meaning. These respective arguments do not change the analysis that Carmel teaches limitation **1[b(i)]** because Carmel teaches that the rate at which the connection delivers data at any given time may be faster than the playback rate.

transmitting computer." (EX1003, 2:51-59 (emphasis added).)[10]

Carmel further teaches that it is preferred that "[f]or optimal, reliable functioning of the upload process from computer **34** to server **36**, T_{SL} [time required to transmit a slice] should desirably be close to or less than a predetermined minimum time $T_{MIN[,]}$" where T_{MIN} is "approximately equal to the slice duration T_1, T_2, etc." (EX1003, 13:7-11.) Carmel further teaches that this applies equally to the download process. (*Id.*, 13:30-35.) In other words, Carmel teaches the preferred operation is for the time required to transmit a given data slice to a user should be ***less than*** the time required to play through the duration of the data slice. Accordingly, a POSITA would understand that in Carmel's preferred operation the transmission rate (or data rate) is more rapid than the playback rate. (Polish, ¶¶228-233.)

Second, Carmel discloses a lag recovery technique in which Carmel takes steps "to increase the data transmission or reception rate" including varying the compression/quality level of the slices and the client **30** selecting lower quality level

[10] In IPR2016-01238, a proceeding involving the related '141 patent, the Board concluded Carmel's normal operation teaches sending (and, thus, receiving) media data elements at a rate more rapid than the playback rate. *WebPower, Inc. v. WAG Acquisition, LLC*, IPR2016-01238, Paper 28 at 18-21 (P.T.A.B. July 16, 2020).

slices. (*See* EX1003, 7:36-41, 7:45-49, 11:9-15 ("if the rate is low, such that...the slices need to be played as fast as or faster than they are being received, the client will preferably select a lower quality level if one is available.").)

It would have been obvious to a POSITA that the increased data rate of the lower-quality data slice would be "more rapid than" the playback rate. (Polish, ¶¶234-237.) When the client **30** uses the lag recovery technique, the transmission rate is "more rapid than" the playback rate: data slices are sent to and arrive at client **30** faster than the data slices are being played out.[11]

Third, to the extent the "data rate" refers to the speed of the overall connection between server **36** and client **30**, rather than the speed with which an individual slice is transmitted from the server **36** to client **30**, Carmel offers an additional way its system supports a data rate more rapid than the playback rate of one or more slices. Carmel discloses a client **30** can open additional links (*i.e.*, additional data connections) to speed up the transfer of data from the server **36**. (EX1003, 10:5563 (client **30** "opens additional links with server **36** in order to **increase the overall**

[11] In IPR2016-01238 the Board also concluded Carmel's lag recovery technique results in "the transmission of the media data elements [] faster than the media [is] being played[.]" *WebPower, Inc. v. WAG Acquisition, LLC*, IPR2016-01238, Paper 28 at 21-23 (P.T.A.B. July 16, 2020).

data rate." (emphasis added).) By permitting multiple links between the server **36** and a single client, Carmel teaches the data rate can be increased, and a POSITA would understand the increased rate could be more rapid than the playback rate. (Polish, ¶238.) For example, if two data slices are simultaneously transmitted across two separate links at the playback rate, the overall data rate would be more rapid than the playback rate. (*Id.*)

Accordingly, Carmel discloses this limitation in multiple ways.

f. "each received media data element is received at a rate as fast as the data connection between the media source and the media player allows;" (Claim 1[b(ii)])

It would have been inherent or obvious to a POSITA that Carmel's server **36** would send a slice of data stream **40** as fast as the data connection between server **36** and a client **30** would allow under any proposed interpretation of this limitation. (Polish, ¶242; *see also infra* Section VII.B.1.f.) Carmel discloses that slices of data stream **40** are sent to clients **30** via well-known Internet protocols, such as HTTP, UDP, RTP, or TCP. (EX1003, 6:50-54, 7:5-9.) It would have been understood by a POSITA that Carmel's use of HTTP and TCP teaches or renders obvious sending data at either (1) the maximum possible speed supported by the protocol, or (2) the maximum available speed of the protocol, taking into consideration external drains on the connection's bandwidth. (*Id.*, 6:50-54, 7:5-9.) In addition, a POSITA would recognize Carmel teaches (3) an artificially enforced maximum permitted data rate

as the system has the option of setting "upper and lower data rate thresholds." (*Id.*, 11:19-22; *see also* Polish, ¶¶244-247.) An upper data rate threshold is simply the permitted data rate for a given data connection. Carmel thus renders obvious sending data slices at the maximum permitted data rate, *i.e.*, at the upper data rate threshold. (Polish, ¶244.)

Carmel thus teaches this limitation.

g. "storing the received media data elements in a memory of the media player;" (Claim 1[c])

For a POSITA, it would be inherent or obvious from Carmel that the media player in client **30** would have a memory and that such memory would store the received media data elements as "clients **30** preferably comprise conventional personal computers or workstations" and "[s]erver **36** may comprise any suitable type of computer or computer system." (Polish, ¶250.) Carmel teaches the media player in client **30** "download[s] and decode[s]" the data slices, and "reconstructs and outputs the multimedia data for the appreciation of a user." (EX1003, 10:45-50.) It would be obvious to a POSITA that the data slices would need to be stored in memory so client **30** could decode and reconstruct the data. (Polish, ¶250.)

h. "playing the received media data elements in series from the memory of the media player; and" (Claim 1[d])

Carmel discloses and/or renders obvious "playing the received media data elements...from the memory of the media player." (EX1003, 10:47-50

("reconstructs and outputs the multimedia data for the appreciation of a user."), 10:24-28, Figs. 6A and 6B; Polish, ¶¶252-255.)

Carmel further discloses playing the received data elements "in series." Carmel teaches using "[t]ime stamps" to "synchronize the data, so that the multimedia sequence is played back just as it was input at computer **34**[.]" (EX1003, 10:50-54.) A POSITA would understand playing out the multimedia data "just as it was input" to the computer, by the live source, is the same as playing the data elements "in series." (Polish, ¶254.)

i. as the received media data elements are played, the media player automatically sending additional requests for subsequent media data elements for storage in the memory of the media player as required to maintain about a predetermined number of media data elements in the memory of the media player during playing." (Claim 1[e])

Carmel in view of Hill renders obvious this limitation. For this limitation the discussion of Hill in the context of claim limitation **1[e]** in Ground 1 is incorporated here.

<u>Manner, Rationale, and Motivation to Combine</u>: It would have been obvious for a POSITA to combine Carmel with Hill, predictably resulting in the media streaming system of Carmel that uses Hill's buffering technique, including maintaining a predetermined amount of data ("request threshold") in the memory of client **30**. (Polish, ¶¶258-261.) A POSITA would have known that combining Hill's

buffering technique with Carmel's media streaming system would be successful. (Polish, ¶258.)

Carmel and Hill are analogous references in the field of streaming media data from servers to client computers and playing back the media data with minimal delay. Carmel and Hill both disclose systems where media data is sent from a network server to a client's personal computer or workstation for subsequent playback. (*Compare*, EX1003, 6:24-7:17, *with* EX1006, 3:57-4:34.) Carmel and Hill both disclose breaking media data into smaller segments and transmitting the segments sequentially. (*Compare* EX1003, 2:1-28, *with* EX1006, 3:37-47.) Moreover, a POSITA would understand from both reference that there are multiple ways to break media data into smaller segments, and that segments of different time periods can be selected. (Polish, ¶259; Carmel, 13:4-6 and 42-46; Hill, 3:37-56.) Carmel and Hill are thus analogous references and disclose similar processes in the field of streaming media data over the Internet.

A POSITA would have been motivated to adopt Hill's buffering technique, including Hill's "request threshold," with Carmel's media streaming system. (Polish, ¶260.) Hill provides significant detail for what happens with frames sent from a source **122** to the workstation **104** prior to those frames being played back by the media player. (*E.g.*, EX1006, 6:35-7:55.) A POSITA would have been motivated to look to Hill's disclosure of a client-side prefetching technique to pair

with Carmel's streaming system. (Polish, ¶260.) Carmel's system, when combined with Hill's prefetching technique would help prevent or lessen delays that result from bandwidth connectivity problems. (Polish, ¶260.) Hill expressly teaches that one advantage of its buffering technique is that the "request threshold" is set based on "the characteristics of a particular system." (EX1006, 6:63-67.) A POSITA would be motivated to use Hill's adaptive buffering technique to better respond to the characteristics of a particular system.

Furthermore, buffer manager **118** would be a convenient and advantageous storage place for data slices transmitted across multiple links; buffer manager **118** could hold the data slices provided by multiple links, order them according to the slice indices, and provide the data slices to the display in an ordered fashion. Hill is well-suited for this task, as Hill teaches its system can include multiple sources and "one source manager **120** for each source[.]" (EX1006, 4:33-34.) This is analogous to Carmel's teaching of opening multiple links between server **36** and client **30**; Hill naturally has one source manager **120** for each link between server **36** and client **30**. Hill thus fits neatly within Carmel's disclosure.

2. Claim 2: "The method of claim 1, further comprising maintaining in the memory of the media player a record identifying the last media data element received and stored by the media player."

It would be obvious to a POSITA that Carmel's client **30** would maintain in the memory of the media player a record identifying the last data slice received and

stored. (Polish, ¶263.) This would be an implied capability in Carmel's system. For example, suppose the user wishes to begin downloading and playing data stream **40** from slice 25 (rather than the most recent data slice). (EX1003, 8:7-9.) After slice 25 is downloaded and the client **30** is ready to download the next slice, client **30** would ***need*** to know it already received slice 25 and should next request slice 26. Furthermore, in client-pull streaming architectures – which Carmel is – "the complexity and the task of maintaining continuous playback (or in general, meeting the QoS requirements of the applications)" is delegated to the client device, so that the server can be "relatively simple and maintain very little state information." (Polish, ¶263.)

Yet another example, Carmel teaches client **30** can "open additional links with server **36**." (EX1003, 10:62-63.) When client **30** is operating multiple links, client **30** would need to know the last data slice received to avoid the multiple links duplicating efforts or overwriting data slices already stored. (Polish, ¶264.)

To the extent not disclosed by Carmel, Carmel in view of Hill renders obvious claim 2. For this limitation, the discussion of claim 2 in Ground 1 is incorporated here. Hill teaches buffer manager **118** recording the last frame received and requesting the next frame, by frame number. (*E.g.*, EX1006, 6:7-16, 7:39-56, 12:7-44.)

Manner, Rationale, and Motivation to Combine: The manner, rationale,

and motivation to combine Carmel with Hill is discussed above in Ground 3, limitation **1[e]** and is incorporated here.

3. Claim 3: "The method of claim 1 wherein the serial identifiers are sequential."

As discussed above, the "serial identifier" of each data slice is the slice index. The slice indices are "sequential[;]" as Carmel explains, "[c]omputer **34** stores each slice as a corresponding file, having a running slice index 1, 2, 3...N." (EX1003, 7:27-28.) The serial identifiers (slice indices) of the slices thus exist sequentially. (Polish, ¶268.)

4. Claim 4: "The method of claim 1, wherein the receiving is via a reliable transmission protocol." and Claim 5: "The method of claim 4, wherein the reliable transmission protocol is TCP."

Carmel specifies that "[c]lients **30** preferably download the sequence using the Hypertext Transfer Protocol (HTTP), although other Internet protocols may also be used, such as UDP or RTP," or "TCP/IP, UDP or RT(x) protocols." (EX1003, 6:50-54, 7:4-12.) Carmel thus teaches that the server **36** can send data slices to clients **30** via one of several Internet protocols, including HTTP (which relies on TCP) and TCP. A POSITA would understand that at least TCP is a "reliable transmission protocol." (Polish, ¶¶271-274.) Accordingly, Carmel discloses claims 4 and 5.

5. Claim 6 (Independent)

As discussed for Ground 1, claim 6 is materially the same as claim 1 except it

is written as a system/device for performing the method of claim 1. (Polish, ¶¶275-276.) For purposes of claim 6, as explained in connection with the preamble of claim 1, the "device comprising a media player" is client **30**.

With respect to claim **6[a]**, Carmel's "device comprising a media player" includes "a processor, memory accessible to the processor, and a data connection." Carmel discloses "clients **30** preferably comprise [a] conventional personal computer[] or workstation[]." (EX1003, 6:38-40.) It was well known by the '594 patent's priority data that a conventional personal computer or workstation would include a processor, memory accessible to the processor, and a data connection. The data connection would be, for example, a connection to the Internet, which Carmel clearly teaches. (*Id.*, Fig. 2, 6:50-54, 7:4-9.) This would have been obvious to a POSITA. (Polish, ¶277.)

As discussed for Ground 1, for several limitations, claim 6 broadly recites "a machine-readable, executable routine containing instructions to cause" the processor or media player to perform a designated function. A computer is designed to include "machine-readable, executable routine[s] containing instructions." (Polish, ¶278.) It would have been obvious to a POSITA that client **30** disclosed by Carmel would include "machine-readable, executable routine[s] containing instructions to cause" client **30** to perform a designated function. (Polish, ¶278.)

For example, with respect to claim limitations **6[b]** through 6**[f]**, it would be

obvious to a POSITA that the media player (*e.g.*, Java applet and/or plug-in) on client **30** includes "a machine-readable, executable routine containing instructions to cause the processor to" send requests to server **36** for media data elements (slices), receive slices from the server **36**, and store and playback those slices. (Polish, ¶¶278-283.) The discussion of claim limitations **1[a]** through **1[e]** is incorporated here.

6. Dependent claims 7-10

As discussed for Ground 1, claims 7 through 10 are materially the same as claims 2 through 5 for the purposes of this petition. (Polish, ¶¶284-285.) Because Carmel renders obvious claim 6 just as it renders obvious claim 1, claims 7 through 10 are thus obvious for the same reasons as claims 2 through 5.

7. Claim 11 (Independent)

As discussed for Ground 1, claim 11 is, for the purposes of this petition, materially the same as claim 1 except it is written as a "computer program product" programmed to perform the method recited in claim 1. (Polish, ¶¶287-288.) For purposes of claim 11, the "computer program product...comprising a non-transitory computer readable storage medium having program instructions embodied therewith" corresponds to the software and hardware of Carmel's clients **30** that are programmed to carry out the method outlined in claim 1. As discussed in reference to claim 6, a POSITA would deem it obvious that Carmel's system discloses a

"computer program product...comprising a non-transitory computer readable storage medium having program instructions embodied therewith." (Polish, ¶288.)

Accordingly, for the reasons discussed with respect to independent claims 1 and 6, Carmel renders obvious claim 11.

8. Dependent Claims 12, 13, 16, 17

As discussed for Ground 1, claims 12, 13, 16, and 17 are materially the same as claims 2 through 5. (Polish, ¶¶290-291.) Because Carmel renders obvious claim 11 just as it renders obvious claim 1, claims 12, 13, 16, and 17 are thus obvious for the same reasons as claims 2 through 5.

9. Claim 14 ("The computer program product of claim 11, wherein the computer program product is provided as a software application for the media player.") and Claim 15 ("The computer program product of claim 11, wherein the computer program product is incorporated in the media player.")

Claims 14 and 15 recite the different ways the computer program product recited in claim 11 may be implemented on a user computer. It would be obvious to a POSITA that Carmel's system could be either provided as a software application that could be used by a personal computer's media player or incorporated into a media player on a personal computer. (Polish, ¶¶293-294.) Carmel provides a software application implementing the disclosed system. (*E.g.*, EX1003, 10:33-34, 13:53-14:16; *see also* Polish, ¶294.) Carmel explicitly teaches its system provided as "software application" that may be used by a media player installed on a Windows

95 or Windows NT operating system. And a POSITA could easily implement the same system "incorporated in the media player" of a Windows 95 or Windows NT operating system. Such was well within the capability of a POSITA. (Polish, ¶294.) Carmel thus renders obvious claims 14 and 15.

E. Ground 5: Claims 1-17 Are Obvious Over Carmel in view of Galensky.

Ground 5 incorporates Ground 4's analysis of Carmel alone but replaces Ground 4's reliance on Hill with Galensky. Accordingly, limitations **1[e]/6[f]/11[e]** will be addressed below. In addition, to the extent Ground 4 relied on combining Carmel with Hill to render obvious dependent claims 2, 7, and 12 Carmel in view of Galensky likewise renders obvious claims 2, 7, and 12. In light of the below analysis and Ground 4's analysis of the remaining limitations and claims in view of Carmel alone, claims 1-17 are obvious over Carmel in view of Galensky.

1. Claims 1[e]/[6f]/11[e])

Carmel in view of Galensky renders obvious claim limitations **1[e]/[6f]/11[e]**.

Galensky teaches a system and method streaming multimedia over a network. (EX1007, 3:13-16, 5:37-45.) Galensky teaches multimedia server **10** is connected, via network **40**, to multiple wireless multimedia devices **80**. (*Id.*, 3:19-63.)

Device **80** receives the multimedia file and "creates a temporary buffer" to ensure "there is a continuous transmission of data so that the multimedia file (e.g., digital MP3 audio file) sounds of high quality." (*Id.*, 5:46-53.) Galensky teaches

maintaining a "minimum threshold level" of data until all the data has been transmitted/received. (*Id*., 2:29-47, 6:10-27.)

A POSITA would understand Galensky's user-side buffer "maintain[s] about a predetermined number of media data elements in the memory of the media player during playing." (Polish, ¶300.) A POSITA would know the "minimum threshold level" of data stored in the buffer means a certain number of media data elements would be stored within the buffer. (*Id*.) Maintaining this minimum threshold level of data thus satisfies the "about a predetermined number" limitation.

Manner, Rationale, and Motivation to Combine: It would have been obvious for a POSITA to combine Carmel with Galensky, predictably resulting in the media streaming system of Carmel that uses Galensky's client-side buffer technique to build up a cache of future data during playback. A POSITA would have known that combining Galensky's buffer technique with Carmel's media streaming system would be successful. (Polish, ¶302.)

Carmel and Galensky are analogous references in the field of streaming media from servers to client devices. Both Carmel and Galensky disclose media data being stored in a server connected to client devices over the Internet. (Polish, ¶303.) Carmel and Galensky both acknowledge the problems of bandwidth capacity and strive to solve these problems. (*Id*.) Galensky and Carmel are thus analogous references and disclose similar processes in the field of streaming media data,

particularly audio and video data, over the internet.

A POSITA would have been motivated to adopt Galensky's buffering technique for Carmel's media streaming system. As discussed in Ground 3 with respect to Hill, a POSITA would recognize buffering data on the client's device would facilitate smoother playback and minimize dropouts and lags; storing a predetermined number of data slices, such as enough slices total 10 seconds of playback, would benefit Carmel's system. (Polish, ¶304.) Indeed, client-side buffering was known in the art and would have required little effort to incorporate into Carmel's clients **30**. Although Galensky relates to telecommunications devices, such as mobile communications devices, a POSITA would not understand Galensky's disclosures to be so limited. (Polish, ¶304.) The art of streaming data from a server to a client device includes streaming to both mobile devices and computers or workstations; a method for one client device could be applied to other client devices.

A POSITA would have been motivated to combine Galensky with Carmel. (Polish, ¶305.)

2. Claims 2, 7, and 12.

As discussed above in the context of Ground 4, which is incorporated here by reference, it would have been obvious to a POSITA that Carmel teaches maintaining a record identifying the last data slice received and stored in client **30**. Particularly

given Carmel's teachings of downloading a data stream from an earlier time and opening multiple links between server **36** and a single client **30**, this capability would have been inherent in or obvious to Carmel's system. (Polish, ¶¶306-308.)

F. Grounds 6 and 7: Claims 1-17 Are Obvious Over Carmel In View of Hill and Ravi and Carmel in View of Galensky and Ravi.

Grounds 6 and 7 incorporate Ground 4's analysis of Carmel and Hill and Ground 5's analysis of Carmel and Galensky but add Ravi's teachings for limitations **1[b(ii)]/6[c(ii)]/11[b(ii)]** and claims 4, 5, 9, 10, 16, and 17. Accordingly, only limitations **1[b(ii)]/6[c(ii)]/11[b(ii)]** and claims 4, 5, 9, 10, 16, and 17 are addressed in the discussion below. Considering the below analysis of these limitations and Ground 4's and Ground 5's analysis of the remaining limitations and claims, claims 1-17 are obvious based on Carmel in view of Hill and Ravi and Carmel in view of Galensky and Ravi. (Polish, ¶¶309-327.)

Limitations **1[b(ii)]/6[c(ii)]/11[b(ii)]** each recite each received media data element is "received at a rate as fast as the data connection between the media source and the media player allows." Claims 4, 9, and 16 recite the receiving is via "a reliable transmission protocol," and Claims 5,10, and 17 specify that reliable transmission protocol is TCP.

To the extent not rendered obvious based on Carmel alone, limitations **1[b(ii)]/6[c(ii)]/11[b(ii)]** and claims 4, 5, 9, 10, 16, and 17 are obvious based on Carmel in view of Ravi.

Ravi teaches a method wherein "the client computer includes a playout buffer, and the transmission rate [from the server to the client] is dynamically matched to the available bandwidth capacity of the network connection between the server and the client computer." (EX1004, 3:11-14.) Ravi discloses "dynamically selects transmission rates in order to better match the varying bandwidth capacity of the network connection." (*Id.*, 6:32-47.) A POSITA would understand that Ravi's disclosure of selecting a transmission rate to "match the...bandwidth capacity of the network connection" teaches sending data "as fast as the data connection...allows." (Polish, ¶312.)

Manner, Rationale, and Motivation to Combine: It would have been obvious for a POSITA to combine Carmel with Hill and Ravi, predictably resulting in the media streaming system of Carmel that uses Ravi's efficient and reliable method of transmitting data slices by matching the transmission rate to the available bandwidth and Hill's buffer manager. (Polish, ¶¶313-316.) It is readily apparent to a POSITA that combining Ravi's transmission methods and Hill's buffer manager with Carmel's media streaming system would be successful. (Polish, ¶313.)

Carmel, Hill, and Ravi are analogous references in the field of streaming media from servers to client computers. (Polish, ¶314.) Carmel and Hill both disclose systems where media data is sent from a network server to a client's personal computer or workstation for subsequent playback. (*Compare*, EX1003,

6:24-7:17, *with* 1006, 3:57-4:34.) Carmel and Hill both disclose breaking media data into smaller segments and transmitting the segments sequentially. (*Compare* EX1003, 2:1-28, *with* EX1006, 3:37-47.) Ravi states its methods "relate[] to multimedia communications" and more particularly to "delivery of multimedia streams over a diverse computer network[.]" (EX1004, 1:55-60.) Ravi's system is substantially similar to Carmel's and Hill's: it includes a "[s]ource[] for generat[ed] video streams[,]" including "a video camera." (*Id*., 6:10-11.) It also includes a stream server which is "coupled to client computer 240 via a computer network [such as] the internet." (*Id*., 5:43-51.) Ravi also teaches media data is transmitted to clients as "streamed [data] packets," which is similar to Carmel's disclosure of transmitting data slices to clients and Hill's disclosure of breaking movie data into units called frames. (*Id.*, 6:27-61.) Ravi, Hill, and Carmel are thus analogous references and disclose similar processes in the field of streaming media data, particularly audio and video data, over the internet.

A POSITA would have been motivated to adopt Ravi's method of reliably streaming media data across the internet for Carmel's media streaming system combined with Hill's buffer manager. (Polish, ¶315.) It would have been natural for a POSITA to combine Carmel's system with Ravi's dynamic method of matching the transmission rate to the available bandwidth to prevent dropouts or data loss. (*Id*.) A POSITA would have been motivated to use Ravi's feedback method to

determine the appropriate rate at which to send data from the server to the client in Carmel's system to assure optimal streaming performance. (*Id*.) Carmel itself suggests using feedback to alter the rate at which data slices are transmitted. (EX1003, 4:63-65.) A POSITA would recognize Ravi teaches a method of using feedback to alter the rate at which data slices are transmitted. (*Id*.)

A POSITA would have had a reasonable expectation of success in modifying Carmel to add Hill's buffering technique and buffer manager and employ Ravi's techniques. Carmel, Hill, and Ravi disclose substantially similar systems that carry out analogous streaming processes. Implementing Ravi's teachings into Carmel's system would involve nothing more than routine adaptions to components in Carmel's structure. (Polish, ¶316.) Carmel's clients **30** would be modified to perform the feedback technique in Ravi. (EX1004, 11:15-26.) This would be well within the skills of a POSITA. (Polish, ¶316.) Carmel and Ravi disclose similar client computers **30**. (*Id*.) It would be obvious that features present in Ravi's client computers could be easily added, or are already present in, Carmel's clients **30**.

Similarly, it would have been obvious for a POSITA to combine Carmel with Galensky and Ravi. (Polish, ¶¶322-326.) It is readily apparent to a POSITA that combining Ravi's transmission methods and Galensky's buffer technique with Carmel's media streaming system would be successful. (Polish, ¶322.)

Carmel, Galensky, and Ravi are analogous references in the field. Carmel and

Galensky disclose media data being stored in a server connected to client devices over the Internet. (Polish, ¶323.) Carmel and Galensky address the problems of bandwidth capacity. (*Id.*) Ravi's system is substantially similar to Carmel's: it includes a "[s]ource[] for generat[ed] video streams[,]" including "a video camera[.]" (EX1004, 6:10-11.) It also includes a stream server which is "coupled to client computer 240 via a computer network [such as] the internet." (*Id.*, 5:43-51.) Ravi also teaches media data is transmitted to clients as "streamed [data] packets," like Galensky's preference for transmitting files in packets. (*Id.*, 6:27-61.) Carmel, Galensky, and Ravi are thus analogous references and disclose similar processes in the field of streaming media data, particularly audio and video data, over the Internet.

As discussed in Ground 5, a POSITA would have been motivated to adopt Galensky's buffering technique for Carmel's media streaming system. A POSITA would recognize buffering data on the client's device would facilitate smoother playback and minimize dropouts and lags; storing a predetermined number of data slices, such as enough slices to total 10 seconds of playback, would benefit Carmel's system. (Polish, ¶324.)

A POSITA would have been motivated to adopt Ravi's method of reliably streaming media data across the internet for Carmel's media streaming system combined with Galensky's buffering technique. (Polish, ¶325.) Due to the inherent

problems of streaming data over the internet, it would be natural for a POSITA to combine Carmel's system with Ravi's dynamic method of matching the transmission rate to the available bandwidth. (*Id*.) A POSITA would have been motivated to use Ravi's feedback method in Carmel's system to assure optimal streaming. (*Id*.) A POSITA would recognize Ravi teaches a method of using feedback to alter the rate at which data slices are transmitted. (*Id*.)

A POSITA would have had a reasonable expectation of success in modifying Carmel to add Galensky's buffering technique and to employ Ravi's dynamic packet transmission techniques as discussed above. (Polish, ¶326.)

Carmel in view of Hill and Ravi and Carmel in view of Galensky and Ravi therefore render obvious limitations **1[b(ii)]/6[c(ii)]/11[b(ii)]** and claims 4, 5, 9, 10, 16, and 17. For the reasons provided in Grounds 4 and 5, Carmel in view of Hill and Ravi and Carmel in view of Galensky and Ravi render obvious claims 1-17.

VIII. SECONDARY CONSIDERATIONS

PO has not identified any evidence of secondary indicia of non-obviousness for the '594 patent. Accordingly, there is no objective evidence of non-obviousness that might warrant a finding that the Petitioned Claims are patentable. (Polish, ¶328.)

IX. CONCLUSION

Petitioner respectfully requests institution of review on claims 1-17, and a finding they are unpatentable.

Dated: April 6, 2023

Respectfully submitted,

By: /Larissa S. Bifano/
Larissa S. Bifano
Reg No. 59,051
Counsel for Petitioner

CERTIFICATE OF COMPLIANCE WITH WORD COUNT

Pursuant to 37 C.F.R. § 42.24(d), I certify that this petition complies with the type-volume limits of 37 C.F.R. § 42.24(a)(1)(i) because it contains 13,892 words, according to the word-processing system used to prepare this petition, excluding the parts of this petition that are exempted by 37 C.F.R. § 42.24(a) (including the table of contents, a table of authorities, mandatory notices, a certificate of service or this certificate word count, appendix of exhibits, and claim listings).

DATED: April 6, 2023

/*Larissa S. Bifano*/
Larissa S. Bifano
Reg No. 59,051
Counsel for Petitioner

CERTIFICATE OF SERVICE

I hereby certify, pursuant to 37 C.F.R. Sections 42.6 and 42.105, that a complete copy of the attached **PETITION FOR INTER PARTES REVIEW OF U.S. PATENT NO. 9,729,594 B2,** including all exhibits (**Nos. 1001-1070**) and related documents, are being served via Priority Mail Express on the April 6, 2023, the same day as the filing of the above-identified document in the United States Patent and Trademark Office/Patent Trial and Appeal Board, upon the PO by serving the correspondence address of record with the USPTO as follows:

ERNEST D. BUFF AND ASSOCIATES LLC
231 SOMERVILLE ROAD
BEDMINSTER NJ 07921

A courtesy copy of the Petition and supporting exhibits were also served electronically to the counsel of record for the PO in the litigation pending before the U.S. District Court for the Western District of Texas entitled *WAG Acquisition, L.L.C. v. Google LLC*, No. 6:21-cv-00816 (W.D. Tex.) as follows:

Ronald Abramson
LISTON ABRAMSON, LLP
405 LEXINGTON AVE, 46TH FLOOR
NEW YORK, NY 10174
T: 212.257.1630
RON.ABRAMSON@LISTONABRAMSON.COM

A courtesy copy of the motion was also served electronically upon counsel of record for Petitioner in *Google LLC v. WAG Acquisitions*, IPR2022-01411 at the following addresses:

Eamonn Gardner
Orion Armon
Joseph Drayton
Sravan Tumuluri
COOLEY LLP
egardner@cooley.com
oarmon@cooley.com
jdrayton@cooley.com
stumuluri@cooley.com

DATED: April 6, 2023

/Larissa S. Bifano/
Larissa S. Bifano
Reg. No. 59,051