US 20090070272A1

(19) United States

(12) Patent Application Publication

(10) Pub. No.: US 2009/0070272 A1

(43) Pub. Date: Mar. 12, 2009

Jain

(54) WIRELESSLY EXECUTING FINANCIAL TRANSACTIONS

(75) Inventor: **Deepak Jain**, Garland, TX (US)

Correspondence Address:
FISH & RICHARDSON P.C.
P.O. BOX 1022
MINNEAPOLIS, MN 55440-1022 (US)

(73) Assignee: **DEVICEFIDELITY, INC.**, Richardson, TX (US)

(21) Appl. No.: **12/209,087**

(22) Filed: **Sep. 11, 2008**

Related U.S. Application Data

(60) Provisional application No. 60/971,813, filed on Sep. 12, 2007.

Publication Classification

(51) **Int. Cl.**
G06Q 20/00 (2006.01)
H04L 9/32 (2006.01)

(52) **U.S. Cl.** **705/75**; 705/35

(57) **ABSTRACT**

The present disclosure is directed to a system and method for wirelessly executing financial transactions. A payment card includes an interface, a communication module, secure memory, a user-interface module, and a processing module. The interface connects to a slot of a mobile host device. The communication module wirelessly receives RF signals from and transmits RF signals to a retail terminal. The secure memory stores user credentials and a payment application used to execute financial transactions with the retail terminal. The user credentials and the payment application are associated with a financial institution. The user-interface module presents and receives information through the GUI of the mobile host device. The processing module executes the payment application using the user credentials in response to at least a transaction request received by the communication module and transmits a transaction response to the retail terminal based, at least in part, on the executed application.

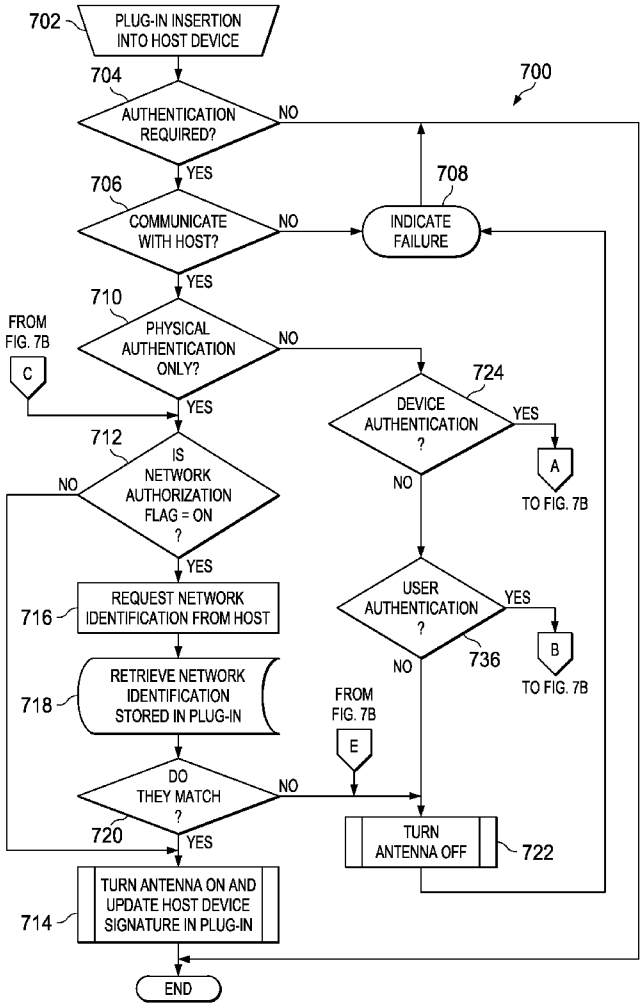

ASSA ABLOY-HID EXHIBIT 1010

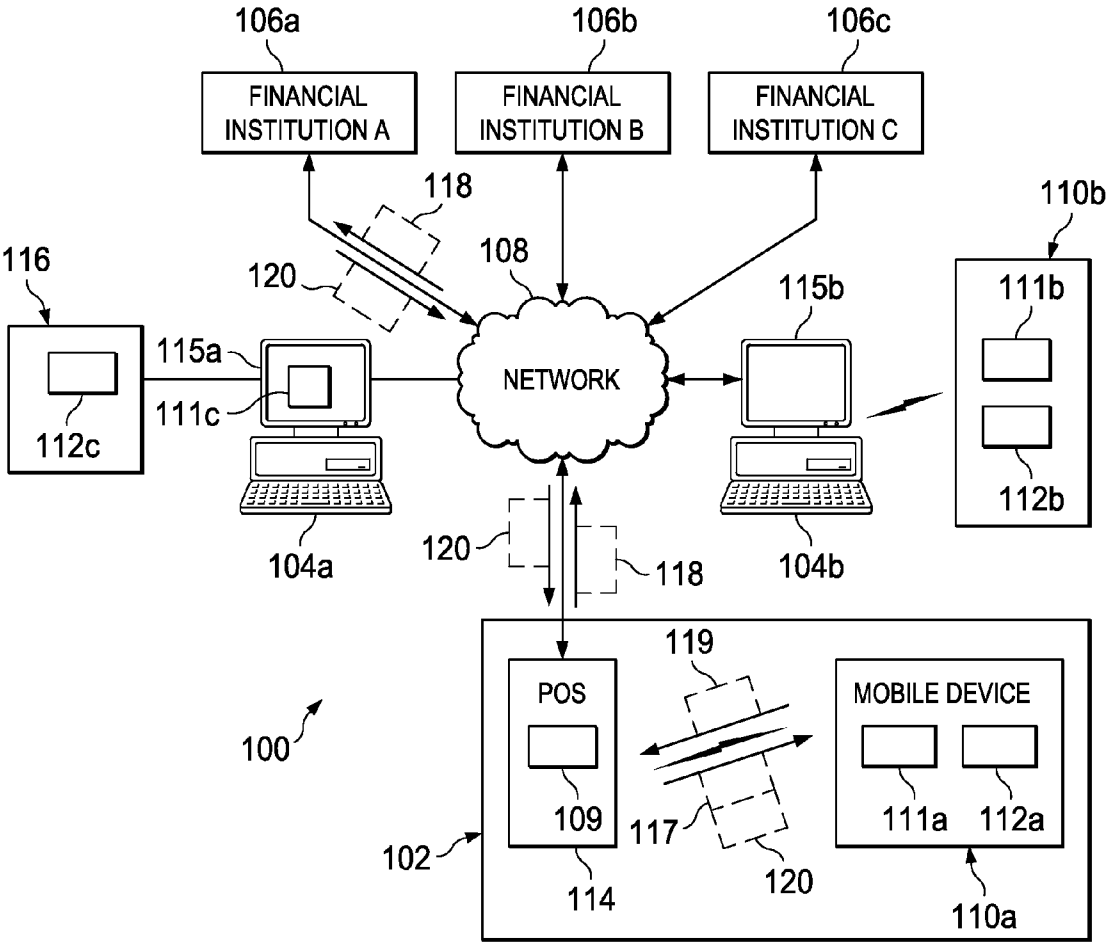
106a
FINANCIAL INSTITUTION A
106b
FINANCIAL INSTITUTION B
106c
FINANCIAL INSTITUTION C
118
120
108
NETWORK
110b
111b
112b
116
112c
115a
111c
115b
104a
104b
120
118
119
POS
109
114
MOBILE DEVICE
111a
112a
110a
117
120
100
102

FIG. 1

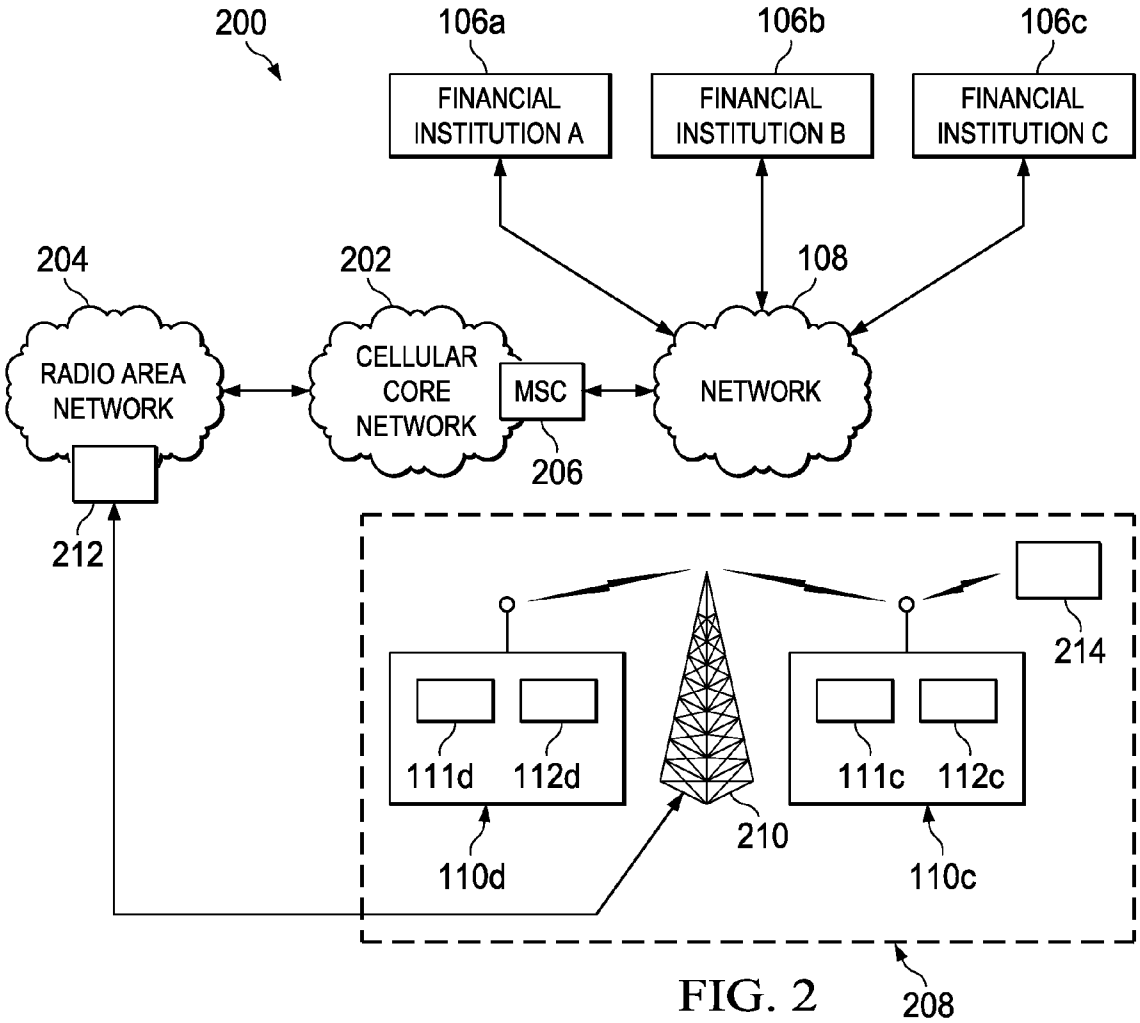
200
106a
FINANCIAL INSTITUTION A
106b
FINANCIAL INSTITUTION B
106c
FINANCIAL INSTITUTION C
204
RADIO AREA NETWORK
202
CELLULAR CORE NETWORK
MSC
206
108
NETWORK
212
214
111d
112d
111c
112c
210
110d
110c
208

FIG. 2

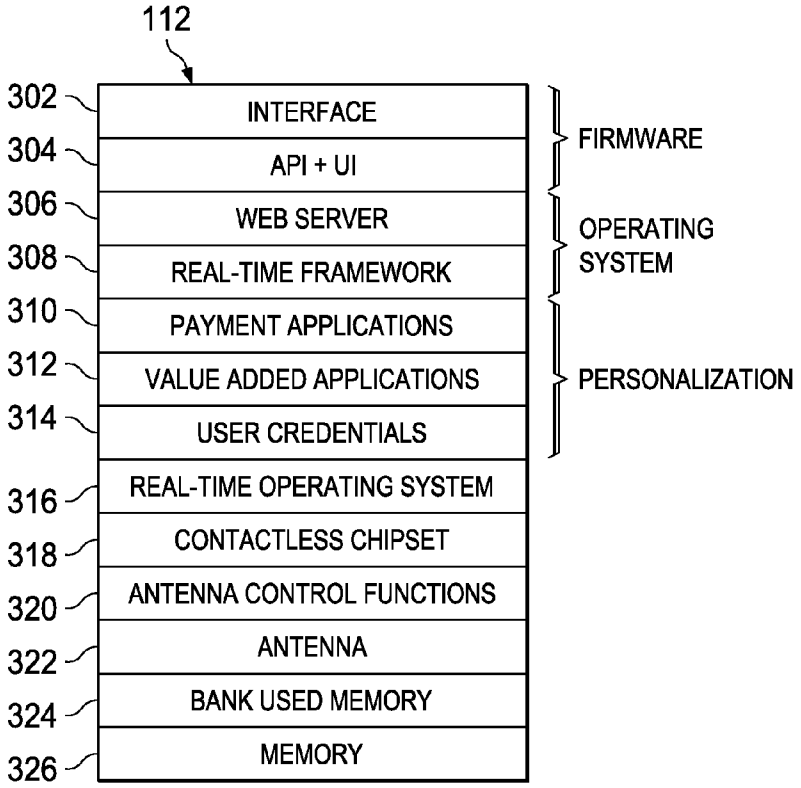
112
302
INTERFACE
304
API + UI
306
WEB SERVER
308
REAL-TIME FRAMEWORK
310
PAYMENT APPLICATIONS
312
VALUE ADDED APPLICATIONS
314
USER CREDENTIALS
316
REAL-TIME OPERATING SYSTEM
318
CONTACTLESS CHIPSET
320
ANTENNA CONTROL FUNCTIONS
322
ANTENNA
324
BANK USED MEMORY
326
MEMORY
FIRMWARE
OPERATING SYSTEM
PERSONALIZATION

FIG. 3

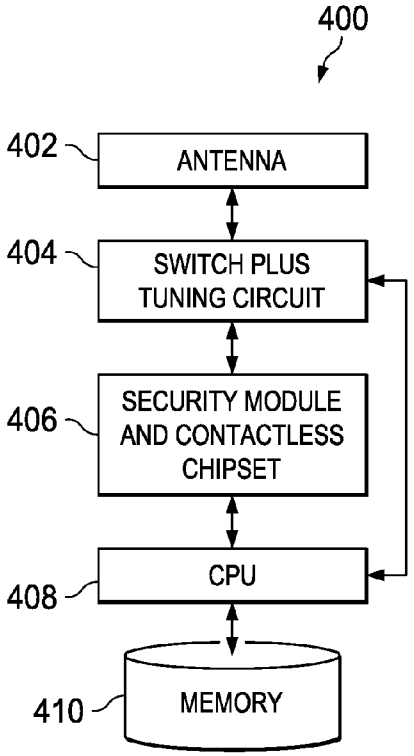
400
402
ANTENNA
404
SWITCH PLUS TUNING CIRCUIT
406
SECURITY MODULE AND CONTACTLESS CHIPSET
408
CPU
410
MEMORY

FIG. 4

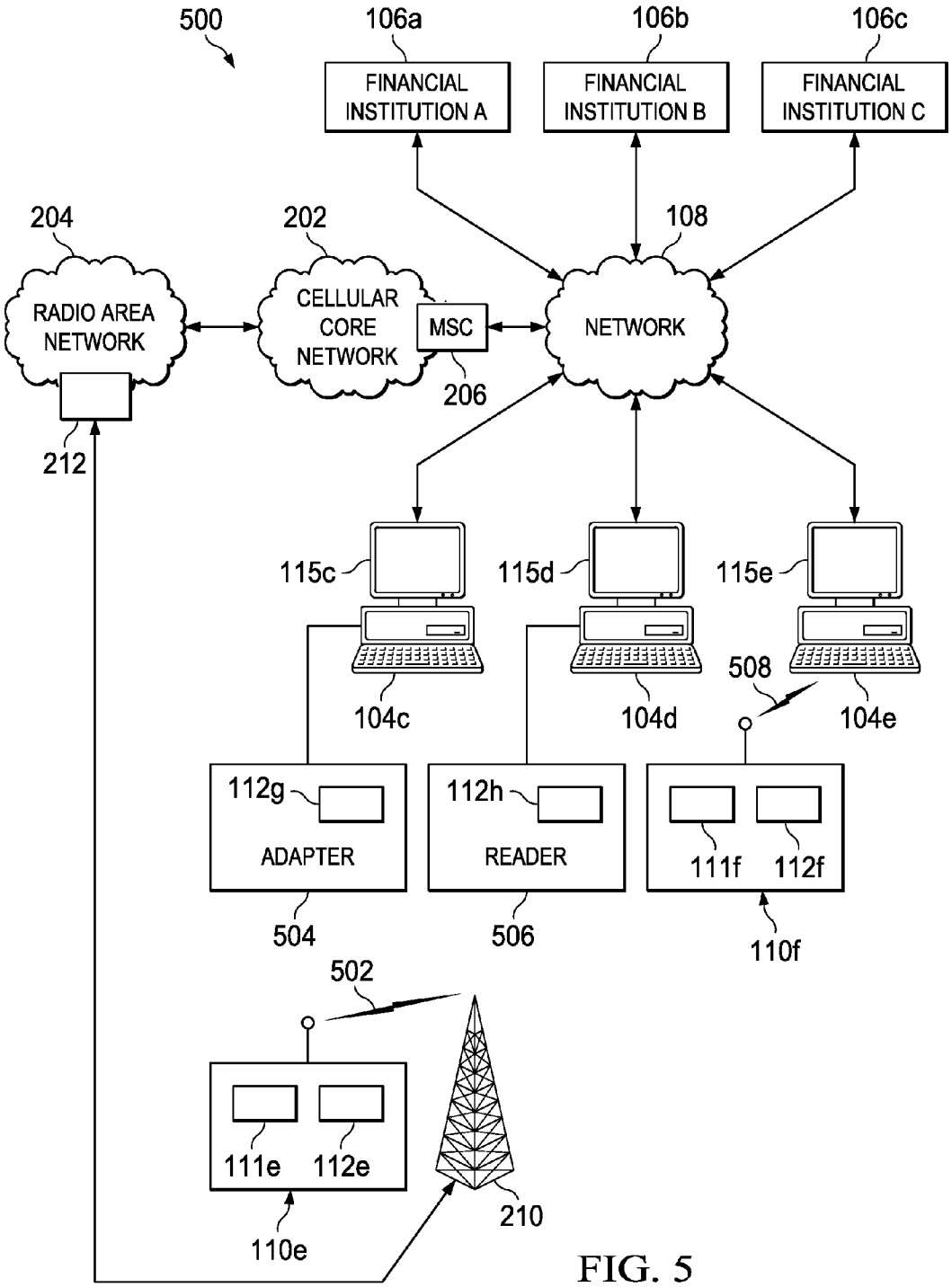
500
106a
FINANCIAL INSTITUTION A
106b
FINANCIAL INSTITUTION B
106c
FINANCIAL INSTITUTION C
204
RADIO AREA NETWORK
202
CELLULAR CORE NETWORK
MSC
206
108
NETWORK
212
115c
115d
115e
104c
104d
508
104e
112g
ADAPTER
504
112h
READER
506
111f
112f
110f
502
111e
112e
110e
210

FIG. 5

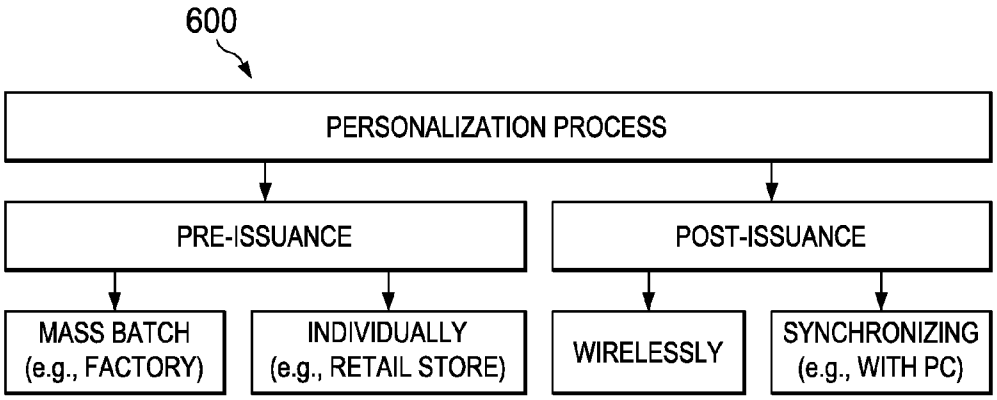

FIG. 6

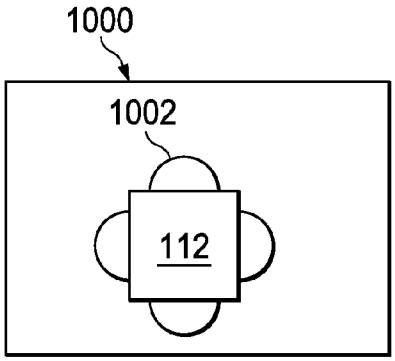

FIG. 10A

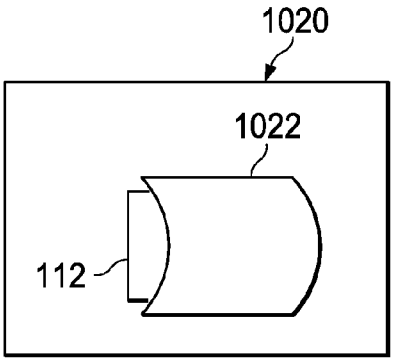

FIG. 10B

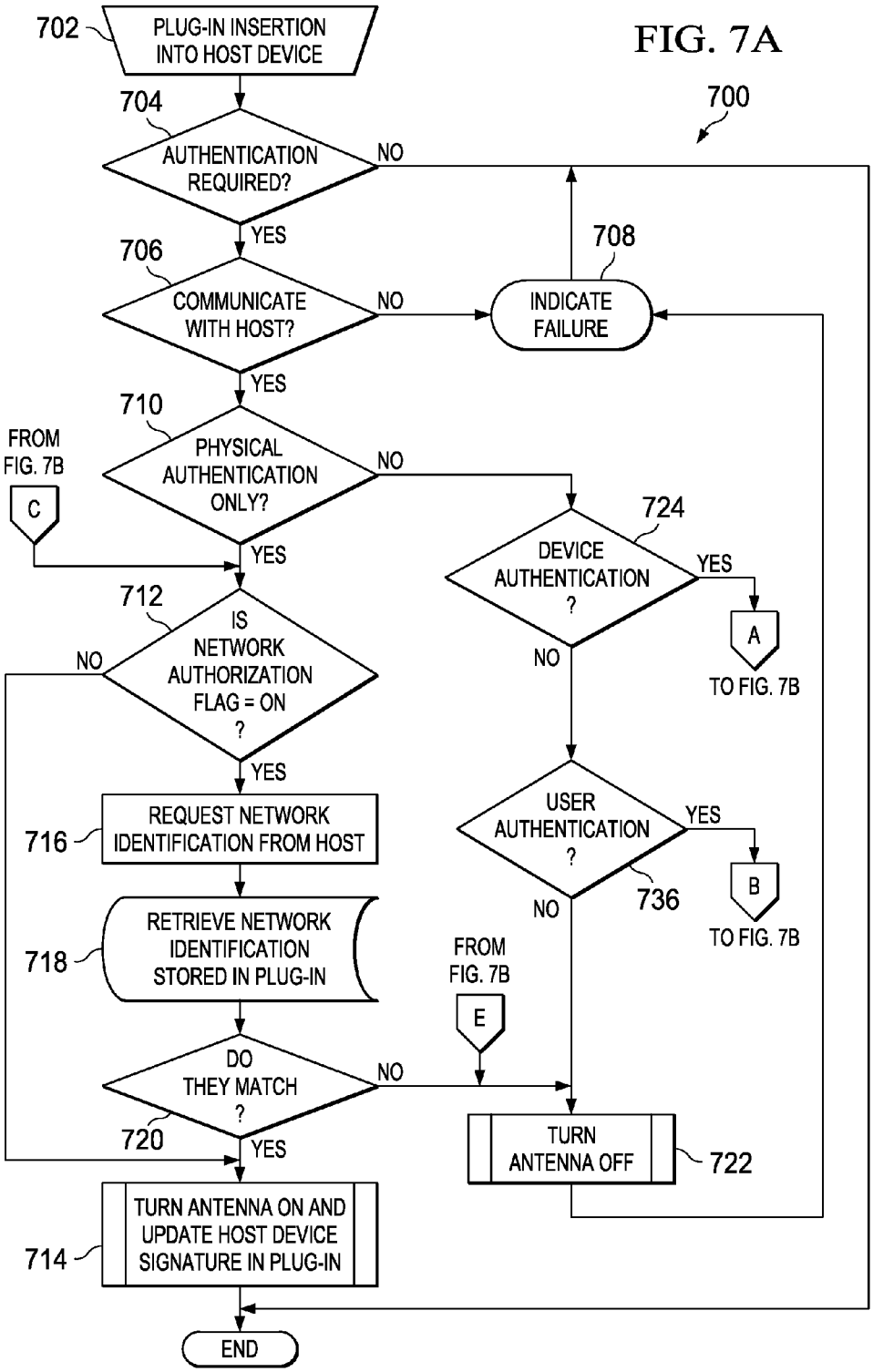
FIG. 7A
700
702
PLUG-IN INSERTION INTO HOST DEVICE
704
AUTHENTICATION REQUIRED?
NO
YES
706
COMMUNICATE WITH HOST?
NO
708
INDICATE FAILURE
YES
710
PHYSICAL AUTHENTICATION ONLY?
NO
FROM FIG. 7B
C
YES
724
DEVICE AUTHENTICATION ?
YES
A
TO FIG. 7B
NO
712
IS NETWORK AUTHORIZATION FLAG = ON ?
NO
YES
USER AUTHENTICATION ?
YES
B
TO FIG. 7B
NO
736
716
REQUEST NETWORK IDENTIFICATION FROM HOST
718
RETRIEVE NETWORK IDENTIFICATION STORED IN PLUG-IN
FROM FIG. 7B
E
DO THEY MATCH ?
NO
720
YES
TURN ANTENNA OFF
722
714
TURN ANTENNA ON AND UPDATE HOST DEVICE SIGNATURE IN PLUG-IN
END

FIG. 7B

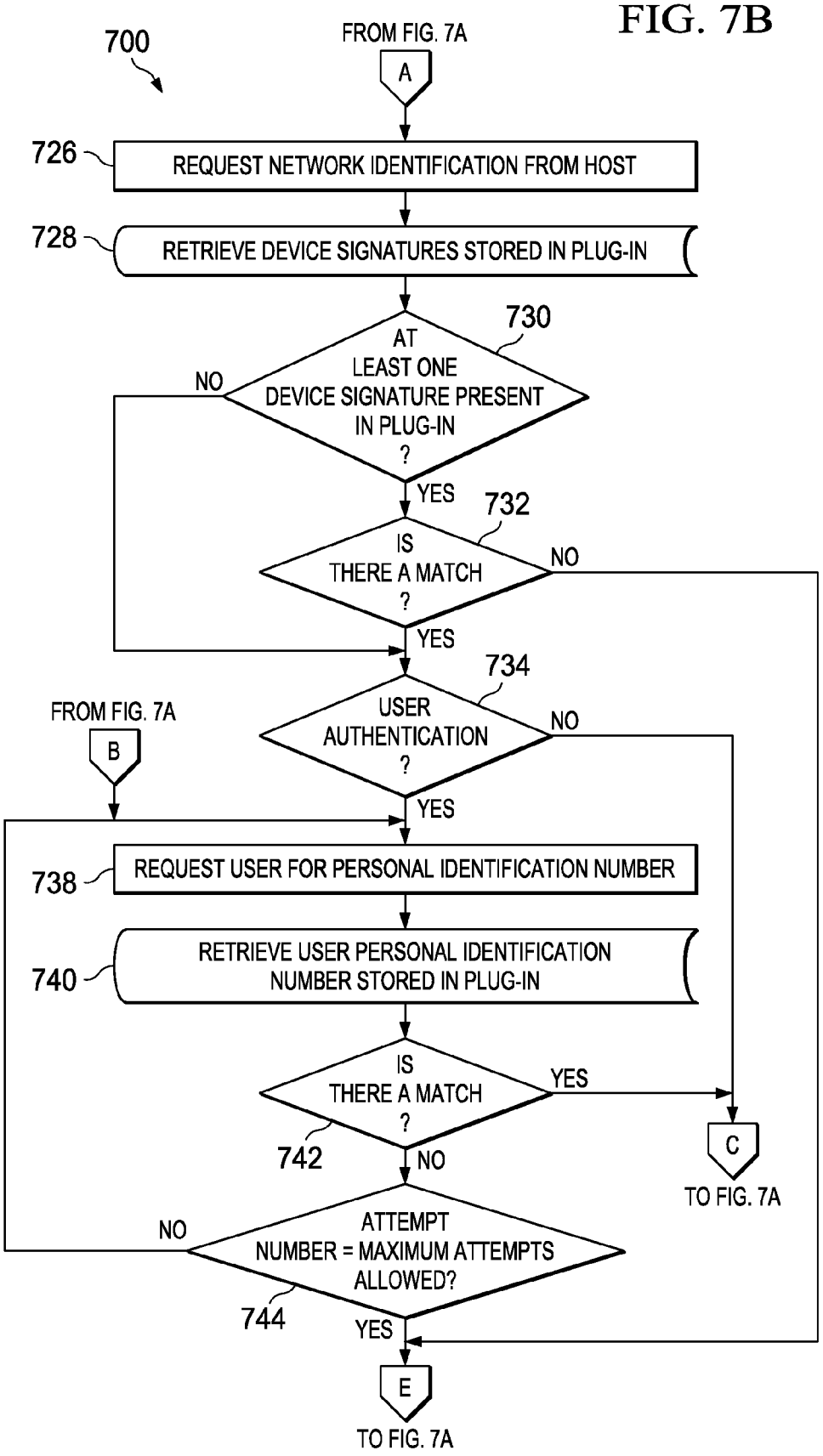
700
FROM FIG. 7A
A
726
REQUEST NETWORK IDENTIFICATION FROM HOST
728
RETRIEVE DEVICE SIGNATURES STORED IN PLUG-IN
730
AT LEAST ONE DEVICE SIGNATURE PRESENT IN PLUG-IN ?
NO
YES
732
IS THERE A MATCH ?
NO
YES
734
USER AUTHENTICATION ?
NO
YES
FROM FIG. 7A
B
738
REQUEST USER FOR PERSONAL IDENTIFICATION NUMBER
740
RETRIEVE USER PERSONAL IDENTIFICATION NUMBER STORED IN PLUG-IN
IS THERE A MATCH ?
YES
742
NO
C
TO FIG. 7A
ATTEMPT NUMBER = MAXIMUM ATTEMPTS ALLOWED?
NO
744
YES
E
TO FIG. 7A

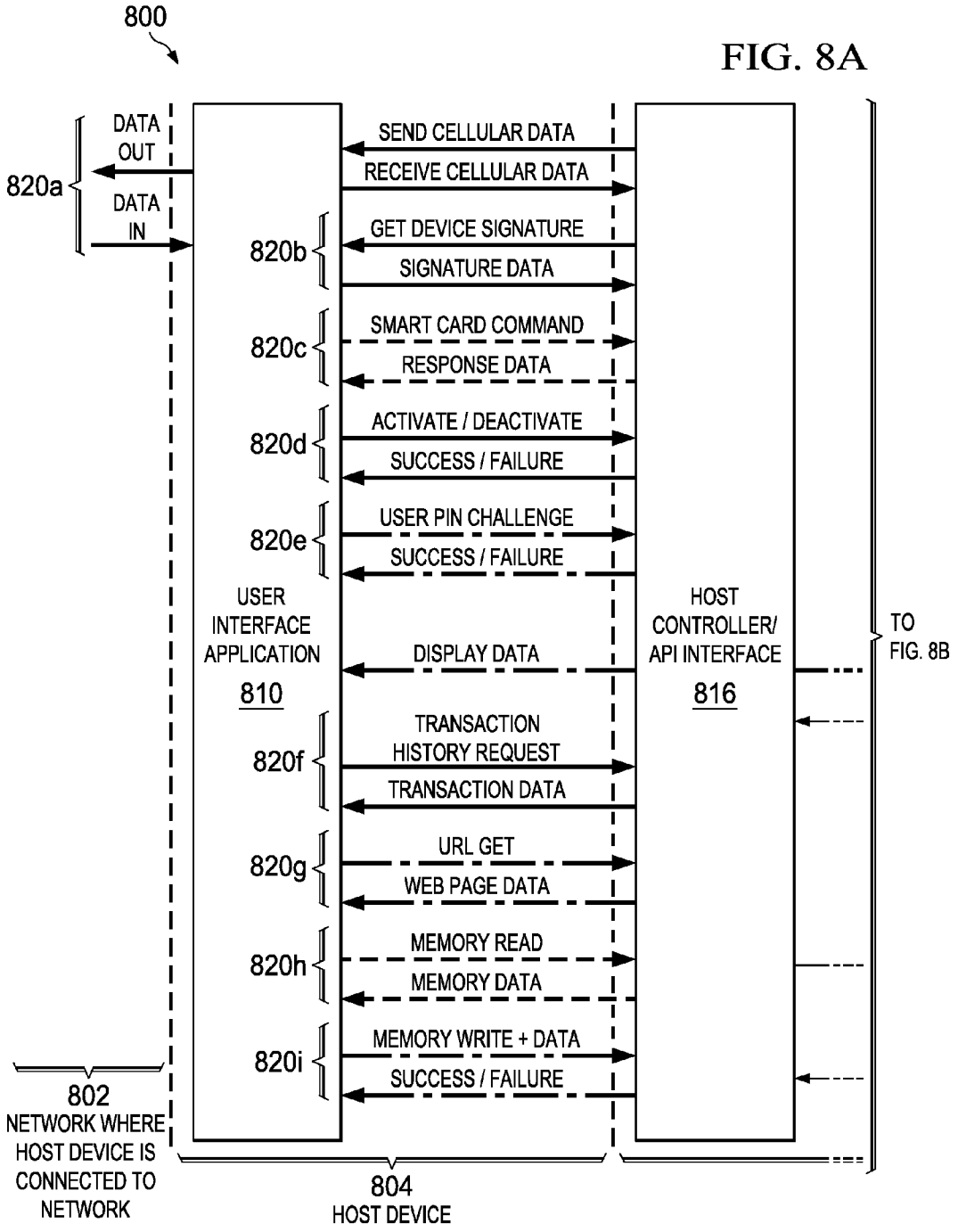
800
FIG. 8A
DATA OUT
DATA IN
820a
SEND CELLULAR DATA
RECEIVE CELLULAR DATA
820b
GET DEVICE SIGNATURE
SIGNATURE DATA
820c
SMART CARD COMMAND
RESPONSE DATA
820d
ACTIVATE / DEACTIVATE
SUCCESS / FAILURE
820e
USER PIN CHALLENGE
SUCCESS / FAILURE
USER INTERFACE APPLICATION
810
DISPLAY DATA
HOST CONTROLLER/ API INTERFACE
816
TO FIG. 8B
820f
TRANSACTION HISTORY REQUEST
TRANSACTION DATA
820g
URL GET
WEB PAGE DATA
820h
MEMORY READ
MEMORY DATA
820i
MEMORY WRITE + DATA
SUCCESS / FAILURE
802
NETWORK WHERE HOST DEVICE IS CONNECTED TO NETWORK
804
HOST DEVICE

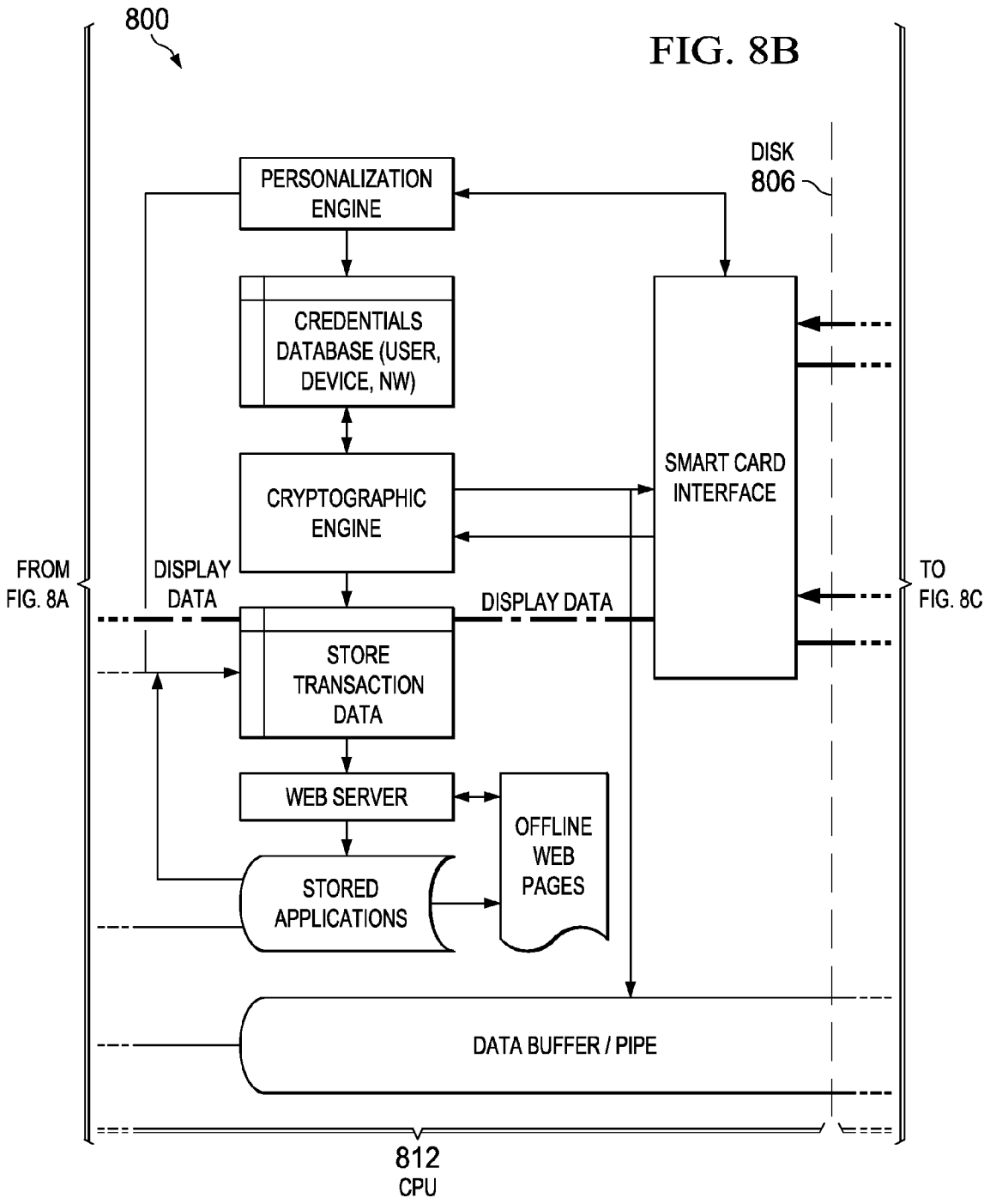
800
FIG. 8B
DISK
806
PERSONALIZATION ENGINE
CREDENTIALS DATABASE (USER, DEVICE, NW)
CRYPTOGRAPHIC ENGINE
SMART CARD INTERFACE
FROM FIG. 8A
DISPLAY DATA
DISPLAY DATA
TO FIG. 8C
STORE TRANSACTION DATA
WEB SERVER
OFFLINE WEB PAGES
STORED APPLICATIONS
DATA BUFFER / PIPE
812
CPU

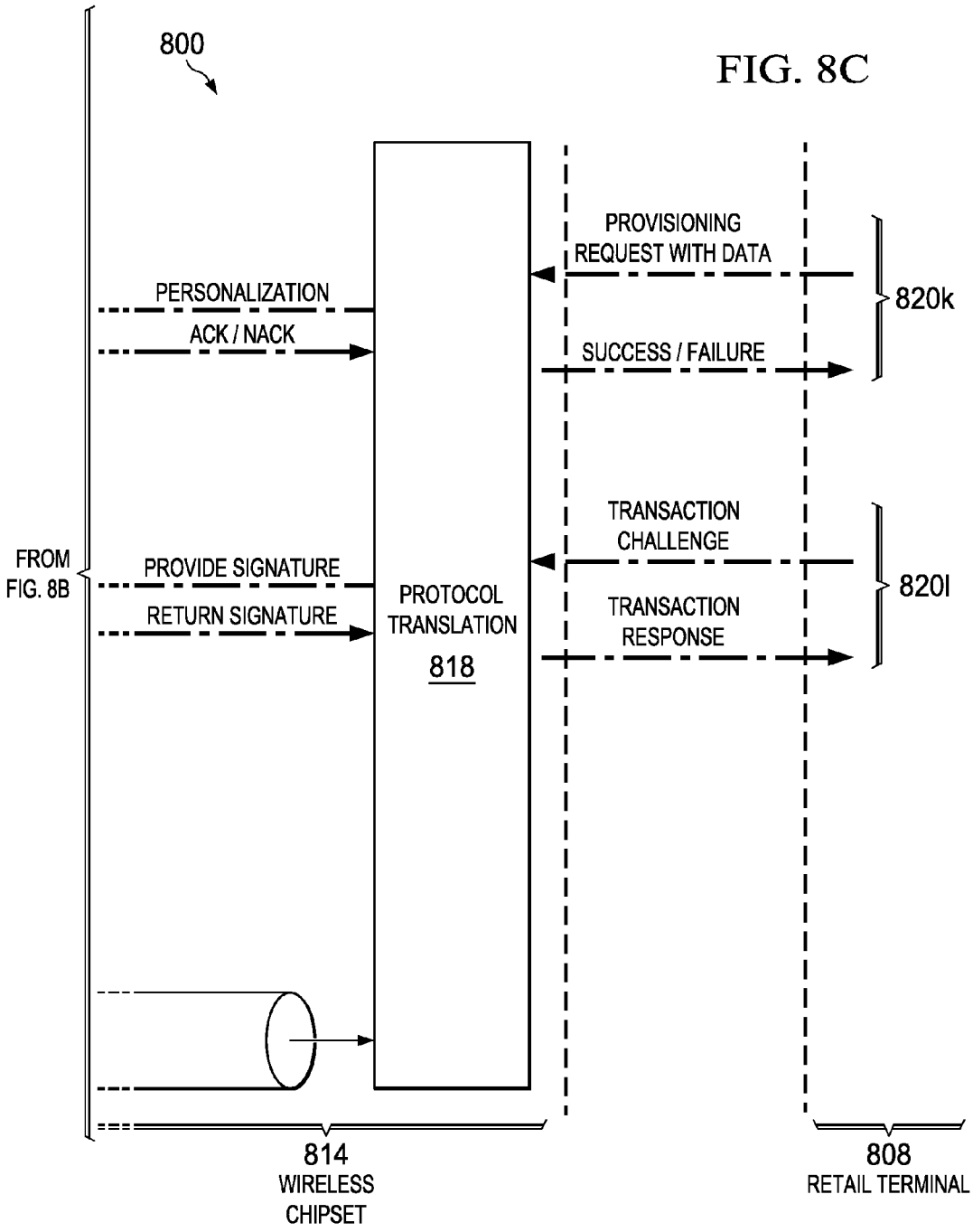
800
FIG. 8C
PROVISIONING
REQUEST WITH DATA
PERSONALIZATION
ACK / NACK
SUCCESS / FAILURE
820k
TRANSACTION
CHALLENGE
FROM
FIG. 8B
PROVIDE SIGNATURE
RETURN SIGNATURE
PROTOCOL
TRANSLATION
818
TRANSACTION
RESPONSE
820l
814
WIRELESS
CHIPSET
808
RETAIL TERMINAL

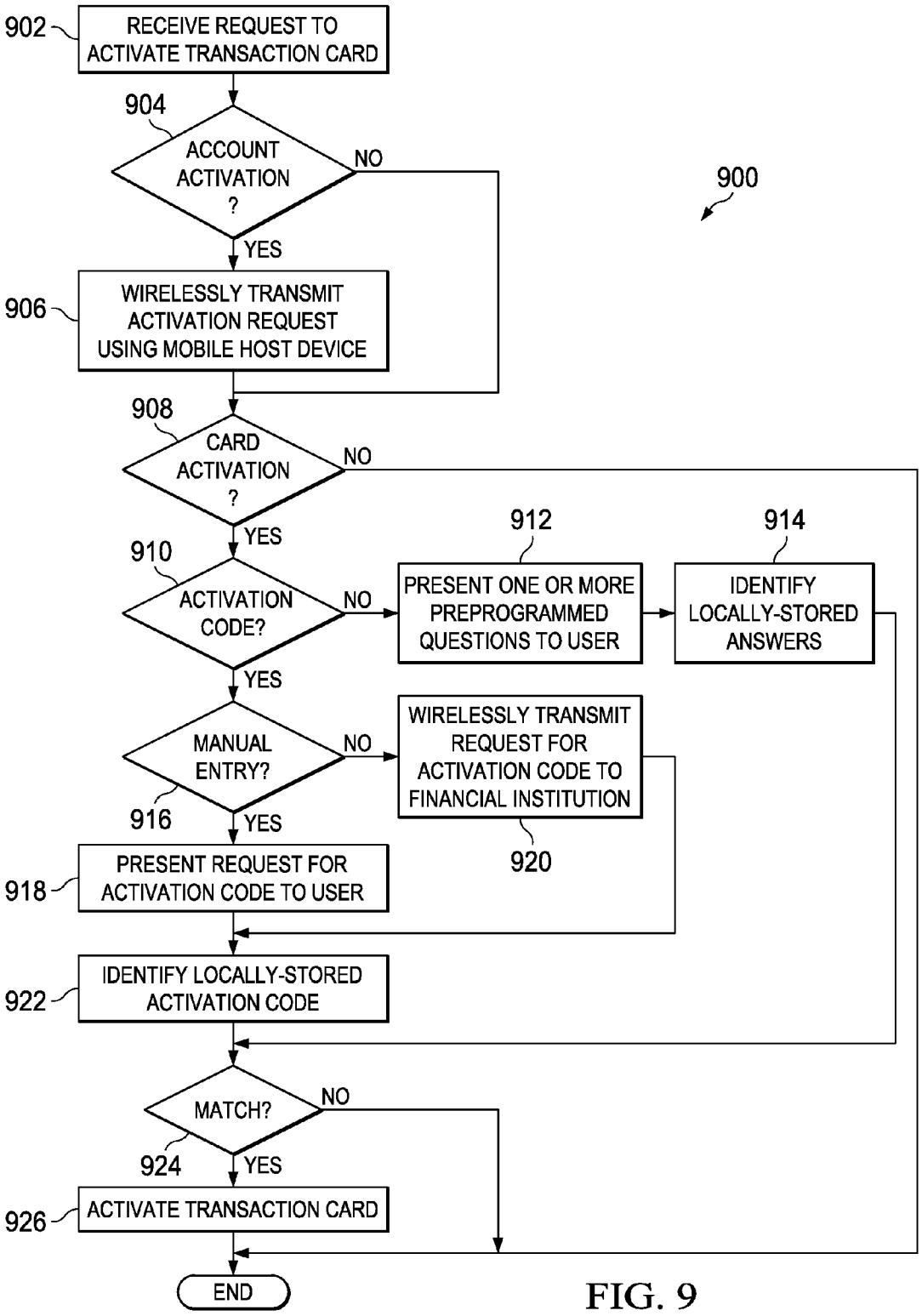
902
RECEIVE REQUEST TO ACTIVATE TRANSACTION CARD
904
ACCOUNT ACTIVATION ?
NO
YES
900
906
WIRELESSLY TRANSMIT ACTIVATION REQUEST USING MOBILE HOST DEVICE
908
CARD ACTIVATION ?
NO
YES
912
914
910
ACTIVATION CODE?
NO
PRESENT ONE OR MORE PREPROGRAMMED QUESTIONS TO USER
IDENTIFY LOCALLY-STORED ANSWERS
YES
MANUAL ENTRY?
NO
WIRELESSLY TRANSMIT REQUEST FOR ACTIVATION CODE TO FINANCIAL INSTITUTION
916
YES
920
918
PRESENT REQUEST FOR ACTIVATION CODE TO USER
922
IDENTIFY LOCALLY-STORED ACTIVATION CODE
MATCH?
NO
924
YES
926
ACTIVATE TRANSACTION CARD
END

FIG. 9

WIRELESSLY EXECUTING FINANCIAL TRANSACTIONS

CLAIM OF PRIORITY

[0001] This application claims priority under 35 USC §119 (e) to U.S. Patent Application Ser. No. 60/971,813, filed on Sep. 12, 2007, the entire contents of which are hereby incorporated by reference.

TECHNICAL FIELD

[0002] This invention relates to network communications and, more particularly, to wirelessly executing financial transactions.

BACKGROUND

[0003] Portable electronic devices and tokens have become an integrated part of the regular day to day user experience. There is a wide variety of common portable and handheld devices that users have in their possession including communication, business and entertaining devices such as cell phones, music players, digital cameras, smart cards, memory token and variety of possible combinations of the aforementioned devices and tokens. All of these devices share the commonality that consumer are accustomed to carrying them with them most of the time and to most places. This is true across the various demographics and age groups regardless of the level of the sophistication of the consumer, their age group, their technical level or background.

[0004] These common handheld devices offer options for expandable memory. Micro Secure Digital (microSD) is the popular interface across high-end cellphones while SD and MultiMediaCard (MMC) interfaces are also available in limited models. MicroSD is the least common denominator supported by the majority of these devices and tokens (in terms of size). In addition, adaptors are available to convert a MicroSD into MiniSD, SD, MMC and USB Although most popular MP3 player (iPOD) offer's a proprietary interface, competing designs do offer standard interfaces. Digital cameras offer mostly SD and MMC while extreme Digital (xD) is another option. Micro and Mini versions of these interfaces are also available in several models. Mini-USB is increasingly available across cellphones, digital cameras and MP3 players for synchronization with laptops.

SUMMARY

[0005] The present disclosure is directed to a system and method for wirelessly executing financial transactions. A payment card includes an interface, a communication module, secure memory, a user-interface module, and a processing module. The interface connects to a slot of a mobile host device. The communication module wirelessly receives RF signals from and transmits RF signals to a retail terminal. The secure memory stores user credentials and a payment application used to execute financial transactions with the retail terminal. The user credentials and the payment application are associated with a financial institution. The user-interface module presents and receives information through the GUI of the mobile host device. The processing module executes the payment application using the user credentials in response to at least a transaction request received by the communication module and transmits a transaction response to the retail terminal based, at least in part, on the executed application.

[0006] The details of one or more embodiments of the invention are set forth in the accompanying drawings and the description below. Other features, objects, and advantages of the invention will be apparent from the description and drawings, and from the claims.

DESCRIPTION OF DRAWINGS

[0007] FIG. **1** is an example transaction system in accordance with some implementations of the present disclosure;

[0008] FIG. **2** is an example transactions system that transmits transaction information through a cellular core network;

[0009] FIG. **3** is an example transaction card of FIG. **1** in accordance with some implementations of the present disclosure;

[0010] FIG. **4** is an example intelligent card that selectively switching an antenna;

[0011] FIG. **5** is an example secure memory of an intelligent card for storing multiple user credentials;

[0012] FIG. **6** is a schematic diagram illustrating personalization processes of intelligent cards;

[0013] FIGS. **7**A and **7***b* are flow charts illustrating an example method for initialize an intelligent card;

[0014] FIGS. **8**A, **8**B and **8**C are examples of call flow illustrating call sessions with an intelligent card;

[0015] FIG. **9** is a flow chart illustrating an example method for activating a transaction card; and

[0016] FIGS. **10**A and **10**B illustrate example cards for housing intelligent cards.

[0017] Like reference symbols in the various drawings indicate like elements.

DETAILED DESCRIPTION

[0018] FIG. **1** is a block diagram illustrating an example transaction system **100** for wirelessly executing transactions using an intelligent card independent of a host device. For example, the system **100** may include a micoSecure Digital (microSD) card that executes transactions with financial institutions independent of a host device. Aside from microSD, the system **100** may include other mass storage interfaces that connect an intelligent card to the host device such as, for example, MultiMediaCard (MMC), SD, Universal Serial Bus (USB), Apple iDock, Firewire, and/or others. An intelligent card is a device configured to insert into or otherwise attach to a host device and access or otherwise execute services (e.g., transactions) independent of the host device. In some implementations, the intelligent card may be shaped as a microSD card including, for example, notches, raised portions and/or other features. The system **100** may include an intelligent card that includes a dual interface. The dual interface may connect the intelligent card to both the host device through a physical interface (e.g., SD, MMC, USB) and external devices through a wireless connection (e.g., NFC, ISO 14443). In some implementations, the intelligent card may include an embedded secure chip, Central Processing Unit (CPU) with operating system, local memory and value added applications accessible by the user through the host device. A host device may include a cellphone, a smartphone, a Personal Digital Assistant (PDA), a MPEG-1 Audio Layer 3 (MP3) device, a digital camera, a camcorder, a client, a computer, and/or other device that includes a mass memory and/or peripheral interface. In some implementations, the intelligent card can operate as a master with the host device being a slave such that the intelligent card controls opera-

tional aspects of the host device such as a user interface. The intelligent card in the system **100** may execute one or more of the following: selectively activate an antenna for wireless transactions in response to at least an event; verify the host device with a financial institution through, for example, a Point Of Sale (POS) using a host signature; execute a transaction with a financial institution through, for example, a POS terminal independent of the host device; and/or other processes. By providing an intelligent card, the system **100** may wirelessly execute transactions with financial institutions without either requiring additional hardware, software, and/or firmware on the host device and/or without requiring changes to existing hardware, software, and/or firmware for reader terminals to enable a user to wirelessly execute a transaction.

[0019] At a high level, the system **100** includes an offline store **102** and clients **104***a* and **104***b* coupled to financial institutions **106** through a network **108**. While not illustrated, the system **100** may included several intermediary parties between the financial institution **106** and the network such as, for example, a transaction acquirer and/or a payment network host. The offline store **102** includes a mobile device **110***a* having a transaction card **112***a* and a Point of Sale (POS) device **114** that executes transactions with customers. The POS device **114** includes a Graphical User Interface (GUI) **109** for presenting information to and/or receiving information from users. In some implementations, the POS **114** may transmit a request to execute a transaction to the transaction card **112**. The transaction card **112** may transmit authentication information to the POS **114**. The client **104** includes the GUI **115** for presenting information associated with the system **100**. The client **104***a* includes a card reader **116** that interfaces the transaction card **112***c* with the client **104***a*. The financial institution **106** may authorize the transaction based, at least in part, on information transmitted by the transaction card **112**. The mobile device **110** includes a GUI **111** for presenting information associated with financial transactions.

[0020] The offline store **102** is generally at least a portion of an enterprise having a physical presence (e.g., building) for operations. For example, the offline store **102** may sell goods and/or services at a physical location (e.g., a brick-and-mortar store) directly to customers. In this example, the offline store **102** buys or otherwise receives goods (e.g., produce) from distributors (not illustrated) and then may sell these goods to customers, such as users of the mobile device **110**. In general, the offline store **102** may offer face-to-face experiences with customers in providing goods and/or services. For example, the offline store **102** may be a click-and-mortar store such that a user selects a good or service using the Internet and purchases and receives the good or service at the offline store **102**. The offline store **102** may provide one or more of the following services associated with goods: inventory, warehousing, distribution, and/or transportation. As a result, the offline store **102** may not immediately distribute goods received from distributors. The offline store **102** may include a single retail facility, one or more retail facilities at a single geographic location, and/or a plurality of retail facilities geographically distributed. In some cases, two or more entities may represent portions of the same legal entity or affiliates. For example, the offline store **102** and distributors may be departments within one enterprise. In summary, the offline store **102** may wirelessly execute financial transactions with the mobile device **110**.

[0021] Each mobile device **110** comprises an electronic device operable to interface with the transaction card **112***a*. For example, the mobile device **110** may receive and transmit wireless and/or contactless communication with the system **100**. As used in this disclosure, the mobile devices **110** are intended to encompass cellular phones, data phones, pagers, portable computers, SIP phones, smart phones, personal data assistants (PDAs), digital cameras, MP3 players, camcorders, one or more processors within these or other devices, or any other suitable processing devices capable of communicating information with the transaction card **112**. In some implementations, the mobile devices **110** may be based on a cellular radio technology. For example, the mobile device **110** may be a PDA operable to wirelessly connect with an external or unsecured network. In another example, the mobile device **110** may comprise a smartphone that includes an input device, such as a keypad, touch screen, mouse, or other device that can accept information, and an output device that conveys information associated with a transaction with the offline store **102**, including digital data, visual information, or GUI **111**.

[0022] The GUI **111** comprises a graphical user interface operable to allow the user of the mobile device **110** to interface with at least a portion of the system **100** for any suitable purpose, such as authorizing transactions and/or displaying transaction history. Generally, the GUI **111** provides the particular user with an efficient and user-friendly presentation of data provided by or communicated within the system **100** and/or also an efficient and user-friendly means for the user to self-manage settings and access services offered by the financial institution **106**. The GUI **111** may comprise a plurality of customizable frames or views having interactive fields, pull-down lists, and/or buttons operated by the user. The term graphical user interface may be used in the singular or in the plural to describe one or more graphical user interfaces and each of the displays of a particular graphical user interface. The GUI **111** can include any graphical user interface, such as a generic web browser or touch screen, that processes information in the system **100** and presents the results to the user.

[0023] The transaction card **112** can include any software, hardware, and/or firmware configured to wirelessly execute transactions with the POS device **114**. For example, the transaction card **112** may execute a contactless transaction with the POS device **114** independent of the mobile device **110***a*. In other words, the transaction card **112** may wirelessly execute transactions without aspects of the transaction being executed by the mobile device **110**. The transaction card **112** may execute transactions with the POS device **114** using short range signals such as NFC (e.g., ISO 18092/ECMA 340), ISO 14443 type A/B, ISO 15693, Felica, MiFARE, Bluetooth, Ultra-wideband (UWB), Radio Frequency Identifier (RFID), contactless signals, proximity signals, and/or other signals compatible with retail payment terminals (e.g., POS **114**). In some implementations, the transaction card **112** may include one or more chipsets that execute an operating system and security processes to independently execute the transaction. In doing so, the mobile device **110** does not require additional hardware, software, and/or firmware to wirelessly execution a transaction with the POS **114** such as an NFC transaction. In some implementations, the transaction card **112** may execute one or more of the following: wirelessly receive a request from the POS device **114** to execute a transaction and/or and provide a response; translate between wireless protocols and protocols compatible with the transaction card **112**; translate

between transaction-card protocols and protocols compatible with mobile device **110**; present and receive information (e.g., PIN request, PIN) from the user through the GUI **111**; decrypt and encrypt information wirelessly transmitted between the transaction card **112** and the POS **114**; execute applications locally stored in the transaction card **112**; selectively switch the antenna of the transaction card **112** on and off based, at least in part, on one or more events; execute authentication processes based, at least in part, on information received, for example, through the GUI **111**; transmit a host signature to POS **114** in response to at least a transaction challenge; store, at least in part, details of the transaction executed between place between the card **112** and the POS device **114**; generate and/or present alerts (e.g., audio-visual alerts) to the user through the GUI **111**; generate and/or transmit wireless-message alerts to the financial institution **106** using the mobile device **110** if cellular capable; and/or others. In some implementations, the transaction card **112** may include a communication module with of a protocol translation module, antenna tuning circuit, power circuit and a miniature antenna tuned to exchange wireless data with a retail terminal **114**.

[0024] In some implementations, the transaction card **112** may initiate a transaction in response to at least a user selecting a graphical element in the GUI **111**. The transaction card **112** may initiate a transaction with the POS **114** in response to at least wireless request transmitted by the POS **114**. In some implementations, the transaction card **112** may selectively switch the antenna between an on and off state in response to one or more events. The one or more events may include a user request, completion of transaction, insertion of card **112** in a different mobile device, location change, timer events, detection of incorrect PIN entered by the user, change of wireless network that the device is connected to, message received from the financial institution **106** using wireless communication methods such as SMS, and/or other events. For example, the transaction card **112** may receive one or more commands to switch the antenna off from a cellular network (not illustrated) through the mobile device **110**. In some implementations, the transaction card **112** may request user identification such as a PIN, a user ID and password combination, biometric signature, and/or others.

[0025] In regards to translating between protocols, the transaction card **112** may process information in, for example, ISO 7816, a standard security protocol, and/or others. In this case, the transaction card **112** may translate between an NFC protocol (e.g., ISO 18092) and the transaction-card protocol. In some implementations, ISO 7816 commands may be encapsulated within interface commands used to transmit data between the host device **114** and the card **112**. In addition, the transaction card **112** may interface the mobile device **110** through a physical interface such as MicroSD, Mini-SD SD, MMC, miniMMC, microMMC, USB, miniUSB, microUSB, firewire, Apple iDock, and/or others. In regard to security processes, the transaction card **112** may implement one or more encryption algorithms to secure transaction information such as card number (e.g., credit card number, debit-card number, bank account number), PIN, and/or other security related information. The security related information may include an expiry date, card verification code, user name, home phone number, user zip code and/or other user information associated with verifying an identity of the card holder. In some implementations, the transaction card **112** may execute private key (symmetric algorithms) such as DES, TDES and/or others or public key (asymmetric algorithms) such as RSA, elliptic curves, and/or others. In addition, the transaction card **112** may include memory (e.g., Flash, EEPROM) for storing user data, applications, offline Webpages, and/or other information. In regards to applications, the transaction card **112** may execute a locally stored application and present information to and received information from the user through the GUI **111**. For example, the transaction card **112** may execute an application used to synchronize an account balance with the financial institution **106** using the GUI **111** and the mobile device **110**. Alternatively or in addition to applications, the transaction card **112** may present offline Web pages to the user using the GUI **111**. In response to initiating a transaction, the transaction card **112** may automatically present an offline Web page through the GUI **111**. In some implementations, the offline Web page can be associated with a financial institution **106**. In some implementations, the transaction card **112** can be backward compatible and operate as a mass storage device. For example, if the wireless interface of the transaction card **112** is not available or deactivated, the transaction card **112** may operate as a mass storage device enabling users to access data stored in the memory component (e.g., Flash). In some implementations, the transaction card **112** can execute a set of initialization commands in response to at least insertion into the mobile device **110**. These initialization commands may include determining device related information for the mobile device **100** (e.g., phone number, signature, connected network information, location information and other available properties), determining user relating information (e.g., PIN code, activation code), incrementing counters, setting flags and activating/deactivating functions according to pre-existing rules and/or algorithms. In some implementations, the transaction card **112** substantially maintains attributes of the mobile device **110**, such as dimensions, accessibility to peripherals as provided by the device, charging, battery life, signal strength, access to display and all other input devices, connectivity to the wireless network if any, interface capability to a PC if any and/or any other features provided by the device. The added functionality may not compromises the device performance in any manner, thereby preserving its certification by regulatory authorities such as FCC and the issuer of the device (e.g., warranty), such as an institution.

[0026] In some implementations, the transaction card **112** may automatically execute one or more fraud control processes. For example, the transaction card **112** may identify an operational change and automatically transmit a notification to the financial institution based, at least in part, on the identified change. The transaction card **112** may execute two fraud control processes: (1) determine a violation of one or more rules; and (2) automatically execute one or more actions in response to at least the violation. In regards to rules, the transaction card **112** may locally store rules associated with updates to operational aspects of the transaction card **112**. For example, the transaction card **112** may store a rule indicating a change in mobile host device **110** is an operational violation. In some implementations, the transaction card **112** may store rules based, at least in part, on updates to one or more of the following: phone number of host device **110**; MAC address of host device **110**; network wirelessly connected to host device **110**; location of host device; and/or other aspects. In response to one or more events matching or otherwise violating rules, the transaction card **112** may execute one or more processes to substantially prevent or otherwise notify the financial insti-

tutions **106** of potentially fraudulent activity. For example, the transaction card **112** may execute a command to block an associated user account and/or the transaction card **112**. Alternatively or in addition, the transaction card **112** may transmit a command to the financial institution **106** to call the mobile host device **110**. In some implementations, the transaction card **112** may execute a command based, at least in part, on an event type. In some examples, the transaction card **112** may initiate a call with the financial institution **106** in response to at least a change in number of the host device **110**. In some examples, the transaction card **112** may re-execute an activation process in response to at least a specified event type. An activation process may include activating the transaction card and/or financial account as discussed in more detail with respect to FIG. **9**. In some implementations, the transaction card **112** may execute a command to disconnect the GUI **111** from the transaction card **112**. The transaction card **112** may present a disconnection notification through the GUI **111** prior to executing the command. In some implementations, the transaction card **112** may transmit a command to the financial institution **106** to deactivate an account associated with the card **112**.

[0027] In some implementations, the POS **114** may transmit a transaction request **117** to the transaction card **112** for information to generate an authorization request **118**. In response to at least the transaction request, the transaction card **112** may transmit one or more transaction responses **119** identifying information associated with a payment account. In some implementations, the POS device **114** may transmit a request **118** to authorize a transaction to the financial institution **106**. The authorization information may include an account number, a transaction amount, user credentials, and/or other information. In response to at least the transaction request **118**, the financial institution **106** may transmit an authorization response **120** to the POS device **114**. In some implementations, the POS device **114** may transmit the response **120** to the transaction card **112**. The transaction response **120** may include, for example, a receipt presentable to the user through the GUI **111***a*. In some implementations, the financial institution **106** may transmit the authorization response **120** to the mobile device through a cellular core network (see FIG. **2**). In this implementation, the financial institution **106** may have stored the association between the mobile device **110** and the transaction card **112** during the user sign-up process, automatically upon user activation of the card **112** when, for example, the card **112** is initially inserted into the mobile device **110**, and/or other event. In the illustrated implementation, the POS **114** includes the GUI **109**.

[0028] The GUI **109** comprises a graphical user interface operable to allow the user of the POS **114** to interface with at least a portion of the system **100** for any suitable purpose, such as a user entering transaction information (e.g., PIN, transaction acceptance) and/or and presenting transaction information (e.g., transaction amount). Generally, the GUI **109** provides the particular user with an efficient and user-friendly presentation of data provided by or communicated within the system **100** and/or also an efficient and user-friendly means for the user to initiate a wirelessly transaction with the transaction card **112**. The GUI **109** may present a series of screens or displays to the user to, for example, accept a transaction and enter security information such as a PIN.

[0029] In some implementations, the transaction card **112** can be implemented differently. The transaction card **112** may be implemented as a KeyFOB and remains live outside the mobile device **110** as a FOB. In this case, the transaction card **112** may be passive and powered from an induction magnetic field generated by the POS **114**. The transaction card **112** may be implemented in the form of an industrial integrated circuit chip for mounting on a PCB or IC chip. In some implementations, the transaction card **112** may be implemented in the form of a self contained desktop standalone unit powered by external AC adapter or stand alone box. In some implementations, the transaction card **112** can be implemented as an external attachment to a mobile device **110** (e.g., case) and connected to the mobile device using a peripheral interface such as USB, serial port, the iDock apple proprietary interface, and/or other interface.

[0030] In some implementations, the transaction card **112** may operate in accordance with one or more of the following modes: active card emulation; active reader; self train; killed; memory; inactive; and/or other modes. The transaction card **112** may operate active-card-emulation mode to convert the mobile device **110** to a contactless payment device loaded with a financial vehicle (FV) that may be, for example, a credit card, a debit card, a gift card and/or other retail payment product. In this mode, the transaction card **112** may execute payment transactions at any capable retail payment terminal (e.g., POS **114**) that accepts contactless payment transactions. For example, such terminals may be contactless-enabled terminals currently being deployed by merchants under MasterCard's paypass, Visa's paywave programs, Amex ExpressPay, Discover Zip, and/or other payment programs. After the antenna of the transaction card **112** is activated in this mode, a merchant terminal may detect the presence of a host device with the transaction card **112** and prompt the user to authorize a transaction such as by entering a PIN, signing on a terminal interface, confirming the amount of the transaction, and/or other action. In this mode, such transactions may be handled as a normal card-present transaction. In other words, the POS **114** may perceive the transaction card **112** as a contactless plastic payment card and may communicate with the transaction card **112** as a contactless plastic payment card to execute payment transactions. In these implementations when the card **112** operates in an active-card emulation mode, the POS **114** can wirelessly communicate with the transaction card **112** using the same signals used to communicate with a contactless plastic payment card. In this active-card emulation mode, the transaction card **112** emulates a contactless plastic payment card and may be backward compatible with the POS **114**. In this implementation, neither the terminal nor the financial institution may require additional software to execute the transaction. In addition, the transaction card **112** in this mode may be used for other applications such as physical access control (to open gates either in a corporate environment or in a transit environment), logical access control (to request network access via a PC), application access control (to buy access for amenities such as transportation, movies or wherever payment needs to be made to gain access to a facility), and/or other applications.

[0031] In the active-reader mode, the transaction card **112** may convert the mobile device **110** to a contactless reader device capable of receiving data when in range of a transmitting terminal (e.g., POS **114**). In some implementations, this mode can require special NFC hardware with reader mode capability as part of the transaction card **112**. In the event that the mobile device **110** is proximate (e.g., 10 cm or less) a transmitting terminal, the reader mode of the transaction card

112 may activated and prompt the user for authorization to receive data through the GUI **111**. This mode may only be suitable for mobile devices **110** with a UI element, such as an OK button and a screen, an LED to indicate that data reception is being requested, and/or other interfaces. Once the user authorizes the transmission, the transaction card **112** in this mode may receive, and locally store, process and may execute a transaction and/or forward received data to another entity. For example, the transaction card **112** in this mode may receive content through promotional posters, validating the purchase of a ticket, and/or others. For example, the transaction card **112** in this mode may function as a mobile POS terminal receiving transaction information from a plastic contactless card/FOB and instructing the POS **114** to prepare a transaction authorization request for the financial institution **106** through a cellular core network. Once the financial institution **106** authorizes the transaction, the mobile device **110** may display the confirmation of the transaction to the user through the GUI **111**.

[0032] In regards to the self-train mode, the transaction card **112** may execute a version of the reader mode. In some implementations, the self-train mode can be activated by a special action (e.g., a needle point press to a small switch, entry of an administrative password via the GUI **111**). In response to at least activating this mode, the transaction card **112** may be configured to receive personalization data over, for example, the short range wireless interface from another peer transaction card such as the plastic contactless cards compliant with this functionality and issued by the financial institution **106** or a specially prepared administrative card for this purpose. Personalization data received in this mode may include encrypted FV information that is stored in secured memory of the transaction card **112**. In some implementations, the transaction card **112** in this mode may receive the FV information through a contactless interface of a transmitter and/or others. The transaction card **112** may then synthesize the FV information that corresponds to the user account and personalize an internal security module that includes, for example, payment applications for executing transactions with financial institutions **106** and associated user credentials. The self-train mode may be used to re-personalize the transaction card **112** in the field. In some implementations, all previous data can be deleted if the self-train mode is activated. The self-train mode may be a peer-to-peer personalization mode where the card **112** may receive personalization information from another transaction card **112**. This mode may represent an additional personalization mode as compared with factory, store and/or Over-The-Air (OTA) personalization scenarios which may be server to client personalization scenarios. In some implementations, the self-train mode may be a peer-to-peer personalization mode where the transaction card **112** receives personalization information from another transaction card. Since two transaction cards **112** are used in this mode, this mode may be different from a server-to-client personalization scenario as with a factory, store, and OTA personalization.

[0033] In regards to the inactive mode, the transaction card **112** may temporarily deactivate the contactless interface. In some implementations, the inactive mode can be activated through the physical interface with the mobile device **110** such as a microSD interface. In response to at least the activation of the inactive mode, the transaction card **112** may temporarily behave as only a mass-memory card. In some implementations, the card **112** may also enter this state when the reset needle point is pressed. In this mode, the transaction card **112** may preserve locally-stored information including financial user data. In this mode, the transaction card **112** may execute the activation process and if successful may return to the active mode. Financial institutions **106** may use this mode to temporarily prevent usage in response to at least identifying at least potentially fraudulent activity.

[0034] In regards to the killed mode, the transaction card **112** may permanently deactivate the contactless interface. In some implementations, the killed mode is activated through the physical interface with the mobile device **110** such as a microSD interface. In response to at least the activation of the killed mode, the transaction card **112** may permanently behaves as a mass memory stick. In the event that the reset needle point is pressed, the transaction card **112** may, in some implementations, not be made to enter any other modes. In addition, the transaction card **112** may delete financial content in memory in response to at least this mode being activated. In some implementations, financial institutions **106** may use this mode to delete data from a transaction card **112** that is physically lost but still connected to the wireless network via the host device **110**.

[0035] In regards to the memory mode, the transaction card **112** may operate as a mass memory stick such that the memory is accessible through conventional methods. In some implementations, the transaction card **112** may automatically activate this mode in response to at least being removed from the host device, inserted into a non-authorized host device, and/or other events. The transaction card **112** may be switched to active mode from the memory mode by, for example, inserting the card **112** into an authorized device or may be switched from this mode into the self-train mode to re-personalize the device for a new host device or a new user account. In some implementations, the memory mode may operate substantially same as the inactive mode.

[0036] In some implementations, the transaction card **112** may be re-personalized/updated such as using software device management process and/or a hardware reset. For example, the user may want to re-personalize the transaction card **112** to change host devices, to have multiple host devices, and/or other reasons. In regards to the software device management, the user may need to cradle the new host device with the transaction card **112** inserted to launch the software device management application. In some implementations, the software management application can be an application directly installed on the client **104**, integrated as a plug-in to a normal synchronization application such as ActiveSync, available via a browser plug-in running on the plug-in provider's website, and/or other sources. The user may log into the application and verify their identity, and in response to verification, the application may allow access to a devices section in the device management application. The device management application may read the transaction card **112** and display the MAC addresses, signatures of the devices that he has inserted his plug-in to, and/or other device specific information. The mobile device **110** may be marked as active and the host device may be shown as disallowed or inactive. The application may enable the user to update the status of the new host device, and in response to at least the selection, the device management application may install the signature on the new host device and mark update the status as allowable in secure memory of the transaction card **112**. The user may be able to also update the status of the mobile device **110** to disallowed. Otherwise, both devices may be active and the

transaction card **112** may be switched between the two devices. In regards to the hardware reset process, the use may use the reset needle point press on the physical transaction card **112** to activate the self-train mode. In this mode, the financial data may be deleted and have to be reloaded. When the transaction card **112** is inserted into the new host device, the provisioning process may begin as discussed above.

[0037] The POS **114** can include any software, hardware, and/or firmware that receives from the transaction card **112** account information for executing a transaction with one or more financial institutions **106**. For example, the POS **114** may be an electronic cash register capable of wirelessly communicating transaction information with the transaction card **112***a*. The POS **114** may communicate transaction information associated with traditional contact payment methods such as plastic cards and checks. If enabled for wireless/contactless payment transactions, the POS **114** may communicate information with the transaction card **112** in one or more the following formats: 14443 Type A/B, Felica, MiFare, ISO 18092, ISO 15693; and/or others. The transaction information may include verification information, check number, routing number, account number, transaction amount, time, driver's license number, merchant ID, merchant parameters, credit-card number, debit-card number, digital signature and/or other information. In some implementations, the transaction information may be encrypted. In illustrated implementation, the POS **114** can wirelessly receive encrypted transaction information from the transaction card **112** and electronically send the information to one or more of the financial institutions **106** for authorization. For example, the POS **114** may receive an indication that a transaction amount has been accepted or declined for the identified account and/or request additional information from the transaction card **112**.

[0038] As used in this disclosure, the client **104** are intended to encompass a personal computer, touch screen terminal, workstation, network computer, a desktop, kiosk, wireless data port, smart phone, PDA, one or more processors within these or other devices, or any other suitable processing or electronic device used for viewing transaction information associated with the transaction card **112**. For example, the client **104** may be a PDA operable to wirelessly connect with an external or unsecured network. In another example, the client **104** may comprise a laptop that includes an input device, such as a keypad, touch screen, mouse, or other device that can accept information, and an output device that conveys information associated with transactions executed with the financial institutions **106**, including digital data, visual information, or GUI **115**. In some implementations, the client **104***b* can wirelessly communicate with the transaction card **112***b* using, for example, an NFC protocol. In some implementations, the client **104***a* includes a card reader **116** having a physical interface for communicating with the transaction card **112***c*. In some implementations, the card reader **116** may at least include an adapter **116***b* that adapts the interface supported by the client **104** (e.g., USB, Firewire, Bluetooth, WiFi) to the physical interface supported by the card **112** (e.g., SD/NFC). In this case, the client **104***a* may not include a transceiver for wireless communication.

[0039] The GUI **115** comprises a graphical user interface operable to allow the user of the client **104** to interface with at least a portion of the system **100** for any suitable purpose, such as viewing transaction information. Generally, the GUI **115** provides the particular user with an efficient and user-friendly presentation of data provided by or communicated within the system **100**. The GUI **115** may comprise a plurality of customizable frames or views having interactive fields, pull-down lists, and/or buttons operated by the user. The term graphical user interface may be used in the singular or in the plural to describe one or more graphical user interfaces and each of the displays of a particular graphical user interface. The GUI **115** can include any graphical user interface, such as a generic web browser or touch screen, that processes information in the system **100** and presents the results to the user. The financial institutions **106** can accept data from the client **104** using, for example, the web browser (e.g., Microsoft Internet Explorer or Mozilla Firefox) and return the appropriate responses (e.g., HTML or XML) to the browser using the network **108**. In some implementations, the GUI **111***c* of the transaction card **112***c* may be presented through the GUI **115***a* of the client **104***a*. In these implementations, the GUI **115***a* may retrieve user credentials from the GUI **111***c* and populate financial forms presented in the GUI **115***a*. For example, the GUI **115***a* may present a forum to the user for entering credit card information to purchase a good through the Internet, and the GUI **115***a* may populate the form using the GUI **111***c* in response to at least a request from the user.

[0040] Financial institutions **106***a-c* can include any enterprise that may authorize transactions received through the network **108**. For example, the financial institution **106***a* may be a credit card provider that determines whether to authorize a transaction based, at least in part, on information received through the network **106**. The financial institution **106** may be a credit card provider, a bank, an association (e.g., VISA), a retail merchant (e.g., Target), a prepaid/gift card provider, an internet bank, and/or others. In general, the financial institution **106** may execute one or more of the following: receive a request to authorize a transaction; identify an account number and other transaction information (e.g., PIN); identify funds and/or a credit limit associated with the identified account; determine whether the transaction request exceeds the funds and/or credit limit and/or violates any other rules associated with the account; transmit an indication whether the transaction has been accepted or declined; and/or other processes. In regards to banking, the financial institution **106** may identify an account number (e.g., bank account, debit-card number) and associated verification information (e.g., PIN, zip code) and determine funds available to the account holder. Based, at least in part, on the identified funds, the financial institution **106** may either accept or reject the requested transaction or request additional information. As for encryption, the financial institution **106** may use a public key algorithm such as RSA or elliptic curves and/or private key algorithms such as TDES to encrypt and decrypt data.

[0041] Network **108** facilitates wireless or wired communication between the financial institutions and any other local or remote computer, such as clients **104** and the POS device **114**. Network **108** may be all or a portion of an enterprise or secured network. While illustrated as single network, network **108** may be a continuous network logically divided into various sub-nets or virtual networks without departing from the scope of this disclosure, so long as at least a portion of network **108** may facilitate communications of transaction information between the financial institutions **106**, the clients **104**, and the offline store **102**. In some implementations, network **108** encompasses any internal or external network, networks, sub-network, or combination thereof operable to facilitate communications between various computing com-

ponents in system **100**. Network **108** may communicate, for example, Internet Protocol (IP) packets, Frame Relay frames, Asynchronous Transfer Mode (ATM) cells, voice, video, data, and other suitable information between network addresses. Network **108** may include one or more local area networks (LANs), radio access networks (RANs), metropolitan area networks (MANs), wide area networks (WANs), all or a portion of the global computer network known as the Internet, and/or any other communication system or systems at one or more locations.

[0042] FIG. **2** is a block diagram illustrating an example transaction system **200** for wirelessly communicating transactions information using cellular radio technology. For example, the system **200** may wirelessly communicate a transaction receipt to a transaction card **112** using a mobile host device **110** and cellular radio technology. In some implementations, cellular radio technology may include Global System for Mobile Communication (GSM), Code Division Multiple Access (CDMA), Universal Mobile Telecommunications System (UMTS), and/or any other cellular technology. The financial institutions **106** may assign one or more mobile host devices **110** to a transaction card **112** in response to one or more events. In some examples, the user may register the one or more mobile devices **110** with the financial institution **106** in connection with, for example, requesting the associated transaction card **112**. In some examples, the transaction card **112** may register the mobile host device **110** with the financial institution **106** in response to at least an initial insertion into the device **110**. Regardless of the association process, the system **100** may use the cellular capabilities of the host devices **110** to communicate information between the financial institutions **106** and the transaction card **112**. In using the cellular radio technology of the host device **110**, the system **100** may communicate with the transaction card **112** when the card **112** is not proximate a retail device, such as the POS device **114** of FIG. **1**.

[0043] In the illustrated implementation, the cellular core network **202** typically includes various switching elements, gateways and service control functions for providing cellular services. The cellular core network **202** often provides these services via a number of cellular access networks (e.g., RAN) and also interfaces the cellular system with other communication systems such as the network **108** via a MSC **206**. In accordance with the cellular standards, the cellular core network **202** may include a circuit switched (or voice switching) portion for processing voice calls and a packet switched (or data switching) portion for supporting data transfers such as, for example, e-mail messages and web browsing. The circuit switched portion includes MSC **206** that switches or connects telephone calls between radio access network (RAN) **204** and the network **108** or another network, between cellular core networks or others. In case the core network **202** is a GSM core network, the core network **202** can include a packet-switched portion, also known as General Packet Radio Service (GPRS), including a Serving GPRS Support Node (SGSN) (not illustrated), similar to MSC **206**, for serving and tracking communication devices **102**, and a Gateway GPRS Support Node (GGSN) (not illustrated) for establishing connections between packet-switched networks and communication devices **110**. The SGSN may also contain subscriber data useful for establishing and handing over call connections. The cellular core network **202** may also include a home location register (HLR) for maintaining "permanent" subscriber data and a visitor location register (VLR) (and/or an SGSN) for "temporarily" maintaining subscriber data retrieved from the HLR and up-to-date information on the location of those communications devices **110** using a wireless communications method. In addition, the cellular core network **202** may include Authentication, Authorization, and Accounting (AAA) that performs the role of authenticating, authorizing, and accounting for devices **110** operable to access GSM core network **202**. While the description of the core network **202** is described with respect to GSM networks, the core network **202** may include other cellular radio technologies such as UMTS, CDMA, and others without departing from the scope of this disclosure.

[0044] The RAN **204** provides a radio interface between mobile devices and the cellular core network **202** which may provide real-time voice, data, and multimedia services (e.g., a call) to mobile devices through a macrocell **208**. In general, the RAN **204** communicates air frames via radio frequency (RF) links. In particular, the RAN **204** converts between air frames to physical link based messages for transmission through the cellular core network **202**. The RAN **204** may implement, for example, one of the following wireless interface standards during transmission: Advanced Mobile Phone Service (AMPS), GSM standards, Code Division Multiple Access (CDMA), Time Division Multiple Access (TDMA), IS-54 (TDMA), General Packet Radio Service (GPRS), Enhanced Data Rates for Global Evolution (EDGE), or proprietary radio interfaces. Users may subscribe to the RAN **204**, for example, to receive cellular telephone service, Global Positioning System (GPS) service, XM radio service, etc.

[0045] The RAN **204** may include Base Stations (BS) **210** connected to Base Station Controllers (BSC) **212**. BS **210** receives and transmits air frames within a geographic region of RAN **204** (i.e. transmitted by a cellular device **102***e*) and communicates with other mobile devices **110** connected to the GSM core network **202**. Each BSC **212** is associated with one or more BS **210** and controls the associated BS **210**. For example, BSC **212** may provide functions such as handover, cell configuration data, control of RF power levels or any other suitable functions for managing radio resource and routing signals to and from BS **210**. MSC **206** handles access to BSC **212** and the network **108**. MSC **206** may be connected to BSC **212** through a standard interface such as the A-interface. While the elements of RAN **204** are describe with respect to GSM networks, the RAN **204** may include other cellular technologies such as UMTS, CDMA, and/or others. In the case of UMTS, the RAN **204** may include Node B and Radio Network Controllers (RNC).

[0046] The contactless smart card **214** is a pocket-sized card with embedded integrated circuits that process information. For example, the smart card **214** may wirelessly receive transaction information, process the information using embedded applications and wirelessly transmit a response. The contactless smart card **214** may wirelessly communicate with card readers through RFID induction technology at data rates of 106 to 848 kbit/s. The card **214** may wirelessly communicate with proximate readers between 10 cm (e.g., ISO/IEC 14443) to 50 cm (e.g., ISO 15693). The contactless smart card **214** operates independent of an internal power supply and captures energy from incident radio-frequency interrogation signals to power the embedded electronics. The smart card **214** may be a memory card or microprocessor card. In general, memory cards include only non-volatile memory storage components and may include some specific security logic. Microprocessor cards include volatile memory and

microprocessor components. In some implementations, the smart card **214** can have dimensions of normally credit card size (e.g., 85.60×53.98×0.76 mm, 5×15×0.76 mm). In some implementations, the smart card **214** may be a fob or other security token. The smart card **214** may include a security system with tamper-resistant properties (e.g., a secure cryptoprocessor, secure file system, human-readable features) and/or may be configured to provide security services (e.g., confidentiality of stored information).

[0047] In some aspects of operation, the financial institution **106** may use the mobile host device **110** to communicate information to the transaction card **112**. For example, the financial institution **106** may wirelessly communicate with the mobile host device **110** using the cellular core network **202**. In some implementations, the financial institution **106** may transmit information to the mobile host device **110** in response to at least an event. The information may include, for example, transaction information (e.g., transaction receipt, transaction history), scripts, applications, Web pages, and/or other information associated with the financial institutions **106**. The event may include completing a transaction, determining a transaction card **112** is outside the operating range of a POS terminal, receiving a request from a user of the mobile host device, and/or others. For example, the financial institution **106** may identify a mobile host device **110** associated with a card **112** that executed a transaction and transmit transaction information to the mobile host device **110** using the cellular core network **202**. In using the cellular core network **202**, the financial institutions **106** may transmit information to the transaction card **112** without requiring a POS terminal being proximate to the card **112**. In addition or alternatively, the financial institution **106** may request information from the mobile host device **110**, the transaction card **112** and/or the user using the cellular core network **202**. For example, the financial institution **106** may transmit a request for transaction history to the card **112** through the cellular core network **202** and the mobile host device **110**.

[0048] In some aspects of operation, a merchant or other entity may operate the mobile host device **110***c* as a mobile POS terminal configured to wirelessly execute transactions with the smart card **214**. For example, a vendor may be mobile (e.g., a taxi driver) and may include a mobile host device **110***c* with a transaction card **112***c*. In this example, the transaction card **112***c* may wirelessly receive account information from the smart card **214** and the POS **114** may transmit an authorization request to the financial institution **106** using the mobile host device **110** and the cellular core network **202**. In response to at least the request, the financial institution **106** may generate an authorization response to the transaction card **112***c* using the mobile host device **110** and the cellular network **202**.

[0049] In some implementations, the system **100** may execute one or more of the modes discussed with respect to FIG. **1**. For example, the transaction card **112** may be re-personalized/updated using the cellular radio technology of the mobile host device **110**. The user may want to re-personalize the transaction card **112** to change host devices, to have multiple host devices, and/or other reasons. In regards to the software device management, the user may transmit to the financial institution **106** a request to re-personalize the transaction card **112** using the cellular radio technology of the host device **110**.

[0050] FIG. **3** illustrates is a block diagram illustrating an example transaction card **112** of FIG. **1** in accordance with some implementations of the present disclosure. In general, the transaction card **112** includes personalized modules that execute financial transactions independent of the mobile device **110**. The illustrated transaction card **112** is for example purposes only, and the transaction card **112** may include some, all or different modules without departing from the scope of this disclosure.

[0051] In some implementations, the transaction card **112** can include an interface layer **302**, an API/UI **304**, a Web server **306**, a real-time framework **308**, payment applications **310**, value added applications **312**, user credentials **314**, real-time OS **316**, contactless chipset **318**, antenna control functions **320**, antenna **322**, bank used memory **324**, and free memory **326**. In some implementations, a host controller includes the interface layer **302**, he API/UI **304**, the Web server **306**, the real-time framework **308**, the contactless chipset **318**, and the antenna control functions **320**. In some implementations, a security module includes the payment applications **310** and the user credentials **314**. The bank used memory **324** and free memory **326** may be contained in Flash. In some implementations, the contactless chipset **318** may be integrated within the security module or operated as a standalone. The antenna **322** may be electronic circuitry.

[0052] The interface layer **302** includes interfaces to both the host device, i.e., physical connection, and the external world, i.e., wireless/contactless connection. In payment implementations, the wireless connection can be based on any suitable wireless standard such as contactless (e.g., ISP 14443 A/B), proximity (e.g., ISO 15693), NFC (e.g., ISO 18092), and/or others. In some implementations, the wireless connection can use another short range wireless protocol such as Bluetooth, another proprietary interfaces used by retail payment terminals (Felica in Japan, MiFare in Asia, etc.), and/or others. In regards to the physical interface, the interface layer **302** may physically interface the mobile device **110** using an SD protocol such as MicroSD, Mini-SD or SD (full-size). In some implementations, the physical interface may include a converter/adapter to convert between two different protocols based, at least in part, on the mobile device **110**. In some implementations, the mobile device **110** may communicate using protocols such as USB, MMC, iPhone proprietary interface, or others.

[0053] The API/UI layer **304** can include any software, hardware, and/or firmware that operates as an API between the mobile device **110** and the transaction card **112** and as the GUI **111**. Prior to executing transactions, the transaction card **112** may automatically install drivers in the mobile device **110** in response to at least insertion. For example, the transaction card **112** may automatically install a MicroSD device driver in the device **110** to enable the transaction card **112** to interface the mobile device **110**. In some implementations, the transaction card **112** may install an enhanced device driver such as a Mass Memory with Radio (MMR) API. In this implementation, the interface can drive a class of plug-ins that contain mass memory as well as a radio interface. The MMR API may execute one or more of the following: connect/disconnect to/from the MMR controller (Microcontroller in the plug-in); transfer data using MM protocol (e.g., SD, MMC, XD, USB, Firewire); send encrypted data to the MMR controller; receive Acknowledgement of Success or Error; received status word indicating description of error; turn radio on/off; send instruction to the transaction card **112** to turn the antenna on with specifying the mode of operation (e.g., sending mode, listening mode); transmit data such as

send instruction to controller to transmit data via the radio; listen for data such as send instruction to controller to listen for data; read data such as send instruction to controller to send the data received by the listening radio; and/or others. In some implementations, MMR can be compliant with TCP/IP. In some implementations, API encapsulated ISO 7816 commands may be processed by the security module in addition to other commands.

[0054] In some implementations, the API can operate in accordance with the two processes: (1) the transaction card **112** as the master and the mobile device **110** as the slave; and (2) the card UI as the master. In the first process, the transaction card **112** may pass one or more commands to the mobile device **110** in response to, for example, insertion of the transaction card **112** into a slot in the mobile device **110**, a transaction between the transaction card **112** and the POS **114**, and/or other events. In some implementations, the transaction card **112** can request the mobile device **110** to execute one or more of following functions: Get User Input; Get Signature; Display Data; Send Data; Receive Data; and/or others. The Get User Input command may present a request through the GUI **111** for data from the user. In some implementations, the Get User Input may present a request for multiple data inputs. The data inputs may be any suitable format such as numeric, alphanumeric, and/or other strings of characters. The Get Signature command may request the mobile device **110** to return identification data such as, for example, a phone number, a device ID like an IMEI code or a MAC address, a network code, a subscription ID like the SIM card number, a connection status, location information, Wi-Fi beacons, GPS data, and/or other device specific information. The Display Data command may present a dialog to the user through the GUI **111**. In some implementations, the dialog can disappear after a period of time, a user selection, and/or other event. The Send Data command may request the mobile device **110** to transmit packet data using its own connection to the external world (e.g., SMS, cellular, Wi-Fi). The Receive Data command may request the mobile device **110** to open a connection channel with certain parameters and identify data received through the connection. In some implementations, the command can request the mobile device **110** to forward any data (e.g., SMS) satisfying certain criteria to be forwarded to the transaction card **112**.

[0055] In regards to the UI as master, the UI may execute one or more of the following commands: security module Command/Response; Activate/Deactivate; Flash Memory Read/Write; Send Data with or without encryption; Receive Data with or without decryption; URL Get Data/URL Post Data; and/or others. The security module commands may relate to security functions provided by the card and are directed towards the security module within the transaction card **112** (e.g., standard ISO 7816 command, proprietary commands). In some implementations, the commands may include encryption, authentication, provisioning of data, creation of security domains, update of security domain, update of user credentials after verification of key, and/or others. In some implementations, the commands may include non security related smart card commands such as, for example, read transaction history commands. The read transaction history command may perform a read of the secure memory **324** of the transaction card **112**. In some implementations, certain flags or areas of the secure memory **324** may be written to after security verification. The Activate/Deactivate command may activate or deactivate certain functions of the transaction card **112**. The Flash Memory Read/Write command may execute a read/write operation on a specified area of the non-secure memory **326**. The Send Data with or without encryption command may instruct the transaction card **112** to transmit data using its wireless connection with, for example, the POS **114**. In addition, the data may be encrypted by the transaction card **112** prior to transmission using, for example, keys and encryption capability stored within the security module. The Receive Data with or without decryption command may instruct the transaction card **112** to switch to listening mode to receive data from its wireless connection with the terminal/reader (e.g., POS **114**). In some implementations, data decryption can be requested by the security module using, for example, keys and decryption algorithms available on the security module, i.e., on-board decryption. The URL Get Data/URL Post Data command may instruct the web server **306** to return pages as per offline get or post instructions using, for example, offline URLs.

[0056] The Web server **306**, as part of the OS of the transaction card **112**, may assign or otherwise associate URL style addressing to certain files stored in the memory **326** (e.g., flash) of the transaction card **112**. In some implementations, the Web server **306** locates a file using the URL and returns the file to a browser using standard HTTP, HTTPS style transfer. In some implementations, the definition of the files can be formatted using standard HTML, XHTML, WML and/or XML style languages. The file may include links that point to additional offline storage locations in the memory **326** and/or Internet sites that the mobile device **110** may access. In some implementations, the Web server **306** may support security protocols such as SSL. The Web server **306** may transfer an application in memory **326** to the mobile device **111** for installation and execution. The Web server **306** may request the capabilities of the browser on the device **110** using, for example, the browser user agent profile, in order to customize the offline Web page according to the supported capabilities of the device and the browser, such as, for example, supported markup language, screen size, resolution, colors and such.

[0057] As part of the Real time OS, the real-time framework **308** may execute one or more functions based, at least in part, on one or more periods of time. For example, the real-time framework **308** may enable an internal clock available on the CPU to provide timestamps in response to at least requested events. The real-time framework **308** may allow certain tasks to be pre-scheduled such that the tasks are executed in response to at least certain time and/or event based triggers. In some implementations, the real-time framework **308** may allow the CPU to insert delays in certain transactions. In some implementation, a part of WAP standards called WTAI (Wireless Telephoney Application Interface) can be implemented to allow offline browser pages on the card **112** to make use of functions offered by the mobile device **110** (e.g., send/receive wireless data, send/receive SMS, make a voice call, play a ringtone etc.).

[0058] The payment applications **310** can include any software, hardware, and/or firmware that exchanges transaction information with the retail terminal using, in some instances, a pre-defined sequence and/or data format. For example, the payment applications **310** may generate a response to a transaction request by selecting, extracting or otherwise including user credentials in the response, in a format compatible with the retail terminal's payment processing application. In some implementations, the payment applications **310** may execute

one or more of the following: transmit properties of the transaction card **112** in response to at least an identification request received from the POS **114**; receive a request to execute a transaction from, for example, the POS **114**; identify user credentials in the bank-used memory **324** in response to at least the request; generate a transaction response based, at least in part, on the user credentials; transmit the transaction response to the POS **114** using, for example, a contactless chipset; receive clear data, for example a random number, from the POS **114** and provide a response containing encrypted data by encrypting the clear data using the cryptographic capabilities of the secure element; transmit the encrypted data using the contactless chipset **318**; increment a transaction counter with every transaction request received; transmit a value of the transaction counter in response to a request from the POS **114**; store details of the transaction request received from the POS **114** into the transaction history area of the bank used memory **324**; transmit transaction history to the CPU of the intelligent card **112** in response to such a request; receive ISO 7816 requests from the CPU of the intelligent card **112**; execute corresponding transactions using the secure element OS; provide responses back to the CPU; and/or other processes. In generating the transaction response, the payment application **310** may generate the response in a format specified by the payment network (VISA, MasterCard, Amex, Discover) associated with a financial institution **106** or a proprietary format owned and defined by the financial institution **106** and processible by the POS **114**. The transaction request may include one or more of the following: user credentials (e.g., account number); expiry data, card verification numbers; a transaction count;; and/or other card or user information. In some implementations, the payment application **310** may comprises a browser application to enable transactions. The browser application **310** may be a browser that may be installed if the device **110** is either missing a browser or has a browser that is incompatible with the Web server **306** on the card **112**. After installation of such browser **310**, future communications between the mobile device **110** and the web-server **306** make use the newly installed browser.

[0059] The real-time OS **316** may execute or otherwise include one or more of the following: real-time framework **308**; a host process that implements the physical interface between the transaction-card CPU and the mobile device **110**; an interface that implements the physical interface between the transaction-card CPU and the security module; a memory-management process that implements the ISO 7816 physical interface between the transaction-card CPU and the memory **324** and/or **326**; an application-layer process that implements the API and UI capabilities; the Web server **306**; antenna-control functions **320**; power management; and/or others. In some implementations, the real-time OS **316** may manage the physical interface between the transaction-card CPU and the secure memory **324** that includes memory segmentation to allow certain memory areas to be restricted access and/or data buffers/pipes. In some implementations, the security module can include a security module OS provided by the security module Vendor and may be compliant with Visa and MasterCard specifications. The security module OS may structure the data in the security module to be compliant with Paypass and/or paywave specifications or any other available contactless retail payment industry specifications. In addition, the security module may store host device signatures and allow modes of the antenna **322** in the secure element **324**. In some implementations, the real-time OS **316** may include a microcontroller OS configured to personalizing the secure element **324** such as by, for example, converting raw FV data (account number, expiry date, Card Verification Number (CVN), other application specific details) into secure encrypted information. In addition, the microcontroller OS may present the card **112** as a MicroSD mass storage to the host device. The microcontroller OS may partition the memory into a user section and a protected device application section. In this example, the device application section may be used to store provider specific applications that either operate from this segment of the memory or are installed on the host device from this segment of the memory.

[0060] The security module chip may provide tamper-resistant hardware security functions for encryption, authentication, management of user credentials using multiple security domains, on-board processing capabilities for personalization, access and storage, and/or others. In some implementations, the security module chip can include the contactless chipset **318**.

[0061] The contactless chipset **318** may provides the hardware protocol implementation and/or drivers for RF communication. For example, the contactless chipset **318** may include on-board RF circuitry to interface with an external world connection using a wireless/contactless connection. The wireless connection may be, for example, client to node (terminal/reader/base station), node to client (passive tag), or peer to peer (another transaction card **112**).

[0062] The antenna control function **320** may controls the availability of the RF antenna. For example, the antenna control function **320** may activate/deactivate the antenna **322** in response to, for example, successful authentication, completion of a routine established by the OS **316**, and/or other event. The antenna **322** may be a short range wireless antenna connected to an NFC inlay via a software switch such as a NAND Gate or other element.

[0063] FIG. **4** is a block diagram illustrating an example intelligent card **400** in accordance with some implementations of the present disclosure. For example, the transaction card of FIG. **1** may be implemented in accordance with the illustrated intelligent card **400**. In general, the intelligent card **400** may independently access services and/or transactions. The intelligent card **400** is for illustration purposes only and may include some, all, or different elements without departing from the scope of the disclosure.

[0064] As illustrated, the intelligent card **400** includes an antenna **402**, a switch plus tuning circuit **404**, a security module and contactless chipset **406**, a CPU **408** and memory **410**. The antenna **402** wirelessly transmits and receives signals such as NFC signals. In some implementations, the switch plus tuning circuit **404** may dynamically adjust the impedance of the antenna **402** to tune the transmit and/or receive frequency. In addition, the switch plus tuning circuit **404** may selectively switch the antenna **402** on and off in response to at least a command from the CPU **408**. In some implementations, the antenna **402** can be a short range wireless antenna connected to an NFC inlay via a software switch such as an NAND Gate or other element to allow for code from the CPU **408** to turn the antenna **402** on and off. In some implementations, the card **400** may include an NFC inlay (not illustrated) that can be a passive implementation of NFC short range wireless technology deriving power from the reader terminal in order to transmit data back or a stronger implementation using an eNFC chipset to power active reader mode

and self-train mode. In addition, the card **400** may include an external needle point reset (not illustrated) that prompts the CPU **408** to depersonalize the memory or secure element.

[0065] The CPU **408** may transmit the switching command in response to an event such as a user request, completion of a transaction, and/or others. When switched on, the security chip and contactless chipset **406** is connected to the antenna **402** and executes one or more of the following: format signals for wireless communication in accordance with one or more formats; decrypt received messages and encrypt transmitted messages; authenticate user credentials locally stored in the memory **410**; and/or other processes. The memory **410** may include a secure and non-secured section. In this implementation, the secure memory **410** may store one or more user credentials that are not accessible by the user. In addition, the memory **410** may store offline Web pages, applications, transaction history, and/or other data. In some implementations, the memory **410** may include Flash memory from 64 MB to 32 GB. In addition, the memory **410** may be partitioned into user memory and device application memory. The chipset **406** may include a security module that is, for example Visa and/or MasterCard certified for storing financial vehicle data and/or in accordance with global standards. In addition to a user's financial vehicle, the secure element may store signatures of allowed host devices and/or antenna modes.

[0066] In some implementations, the CPU **408** may switch the antenna **402** between active and inactivate mode based, at least in part, on a personalization parameter defined by, for example, a user, distributor (e.g., financial institution, service provider), and/or others. For example, the CPU **408** may activate the antenna **402** when the intelligent card **400** is physically connected to a host device and when a handshake with the host device is successfully executed. In some implementations, the CPU **408** may automatically deactivate the antenna **402** when the intelligent card **400** is removed from the host device. In some implementations, the antenna **402** is always active such that the intelligent card **400** may be used as a stand-alone access device (e.g., device on a keychain). In regards to the handshaking process, the CPU **408** may execute one or more authentication processes prior to activating the intelligent card **400** and/or antenna **402** as illustrated in FIG. **7**. For example, the CPU **408** may execute a physical authentication, a device authentication, and/or a user authentication. For example, the CPU **408** may activate the antenna **402** in response to at least detecting a connection to the physical interface with the host device (e.g., SD interface) and successful installation of the device driver for mass memory access (e.g., SD device driver) on the host device. In some implementations, device authentication may include physical authentication in addition to a signature comparison of a device signature stored in memory (e.g., security module (SE)) that was created during first-use (provisioning) to a run-time signature calculated using, for example, a unique parameter of the host device. In the event no host device signature exists in the memory, the CPU **408** may bind with the first compatible host device the card **400** is inserted into. A compatible host device may be a device that can successfully accomplish physical authentication successfully. If a host-device signature is present in the memory, the CPU **408** compares the stored signature with the real-time signature of the current host device. If the signatures match, the CPU **408** may proceed to complete the bootstrap operation. If the signatures do not match, host device is rejected, bootstrap is aborted and the card **400** is returned to the mode it was before being inserted into the device.

[0067] User authentication may include verification of physical connection with a user using a PIN entered by the user, a x.509 type certificate that is unique to the user and stored on the host device, and/or other processes. Device and user authentication may verify a physical connection with device through comparison of a device signature and user authentication through verification of user PIN or certificate. In some implementations, the user can select a PIN or certificate at provisioning time. If this case, the CPU **408** may instantiate a software plug-in on the host device. For example, a software plug-in may request the user for his PIN in real time, read a user certificate installed on the device (e.g., x.509), and/or others. The operation of the software plug-in may be customized by the provider. Regardless, the returned user data may be compared with user data stored in the memory. In case of a successful match, the antenna **402** may be activated. In case of an unsuccessful match of a certificate, then card **400** is deactivated. In case of unsuccessful PIN match, the user may be requested to repeat PIN attempts until a successful match or the number of attempts exceeds a threshold. The disk provider may customize the attempt threshold.

[0068] In regards to network authentication, the host device may be a cellphone such that the card **400** may request network authentication prior to activation. For example, the card **400** may be distributed by a Wireless Network Operator (WNO) that requires a network authentication. In this example, a flag in memory may be set to ON indicating that network authentication is required. If the flag is set to ON, a unique identity about the allowed network is locally stored in memory such a Mobile Network Code for GSM networks, a NID for CDMA networks, a SSID for broadband networks, and/or identifiers. If this flag is ON, the CPU **408** in response to at least insertion may request a special software plug-in to be downloaded to the host device and instantiated. This software plug-in may query the host device to respond with network details. In some cases, the type of unique network identity employed and the method to deduce it from the host device may be variable and dependent on the network provider and capability of the host device. If the locally-stored ID matches the request ID, the CPU **408** activated the antenna **402** to enable access or otherwise services are denied.

[0069] FIG. **5** illustrates an example transaction system **500** for wirelessly communicating transaction information using one of a plurality of interfaces. For example, the system **500** may interface the transaction card **112** using a wired or wireless interface. In regards to wired interfaces, the system **500** includes an adaptor **504** and a reader **506**. The adaptor **504** can include any software, hardware, and/or firmware configured to translated between a format compatible with the card **112** and a format compatible with the client **104***c*. For example, the adaptor **504** may translate between microSD protocol and a USB protocol. The reader **506** can include any software, hardware, and/or firmware configured to directly interface with the card **112***h*. For example, the reader **506** may be a microSD reader such that the client **104***d* interfaces with the card **112***h* using a microSD protocol. In regards to wireless interfaces, the system **500** may include a cellular interface **502** and a short-range wireless interface **508**. In regards to the cellular interface **502**, the financial institutions **106** may wirelessly communicate with the transaction card **112***e* using the cellular radio technology of the mobile device **110***e*. For

example, the cellular interface **502** may be a CDMA interface, a GSM interface, a UMTS interface, and/or other cellular interfaces. In regards to the short-range wireless interface **508**, the financial institutions **106** may wirelessly communicate with the transaction card **112***f* using, for example, WiFi technology. The short-range wireless interface **508** may be an 802.11 interface, a Bluetooth interface, and/or other wireless interface. In these implementations, the client **104***e* may include a transceiver used for wireless communication with the transaction card **112***f*.

[0070] FIG. **6** is a schematic diagram **600** of personalization of a intelligent card (e.g., the transaction card **112**, the service card **210**). In particular, the intelligent card may be personalized prior to being issued to a user, i.e., pre-issuance, or after being issued to a user, i.e., post-issuance. In regards to pre-issuance, intelligent cards may be personalized in mass batches at, for example, a factory. In this example, each intelligent card may be loaded with user credentials, security framework, applications, offline Web pages, and/or other data. In some implementations, a intelligent card may be personalized individually at, for example, a bank branch. In this case, a intelligent card may be individually loaded with data associated with a user after, for example, purchasing the disk. As for post issuance, the intelligent card may be personalized wirelessly. For example, the transaction card **112** may be personalized through a cellular connection established using the mobile device **110**. In some implementations, an intelligent card may be personalized by synchronizing with a computer such as client **104**. The transaction card **112** may receive from an enterprise at least associated with the financial institution **106** that personalization data prior to activation including user credentials, payment application and at least one of operational flags, rule table or user interface. The personalization data present in the card may be updated after activation using at least one of the following methods: wireless or over the air messages containing special and secure update instructions; internet or client application running on a PC connected to the transaction card **112** via the host device or a card reader; internet application wirelessly connecting to the transaction card **112** via the host mobile device or user interface application of the transaction card **112** itself, and/or other methods.

[0071] In some implementations, provisioning of the intelligent card can be based, at least in part, on the distribution entity (e.g., financial institution, wireless operator, user). For example, the intelligent card may be distributed by a financial institution such as a bank. In the bank implementation, the intelligent card can be pre-provisioned with user accounts. In this case, the intelligent card may be activated in response to at least initial insertion into a host device. The antenna mode may be set to physical authentication only by default. In some examples, the user may self-select a PIN authentication to prevent unauthorized use or through a PC cradle and plug-in management software if the host device does not have a screen and keyboard. In the wireless-operator implementation, the intelligent card may require device authentication before activation. In some examples, the user may provision financial data (e.g., credit or debit) using one of several methods. In addition, the user may add user authentication. In the user-provided implementation, the user may acquire the intelligent card from, for example, a retail store or other channels like OEM host device manufacturers. In this case, the user may activate the card in a plurality of different devices with provider selected provisioning.

[0072] In regards to activating for financial transactions, the intelligent card may be configured in memory mode when user acquires the disk from, for example a bank, a wireless operator, a third-party provider, and/or others. Activation of the card may include the following two levels: 1) physically, specifying antenna availability under a specific set of circumstances desired by the provider; and b) logically, at the financial institution signifying activation of the financial vehicle carried on the card. In some implementations, activation may be based, at least in part on device distributor, antenna availability selection, and/or type of host device as illustrated in Table 1 below.

TABLE 1

Plug-in Seller and Mode of distribution	Plug-In Initial State and Antenna Availability Choice	Device Has No Screen/ Keyboard	Device Has Screen & keyboard
FI: Financial Institution (bank or retailer) ships plug-in directly to the subscriber or through participating resellers/ distributors etc.	Plug-In is in Memory Mode, It is fully personalized with user's account information (FV) and Antenna mode is set to Physical Authentication	Manual: User has to call FI's number to activate his account, the Device can only work with a single account. User can also access FI's site on the internet using another PC to activate his account	If the device is capable of wireless access, upon insertion, the plug-in spawns a web page and takes the user to FI's website. The user self activates his account by entering his account number and matching secret personal information (last 4 digits of SSN or home phone number for example). The user can also optionally select a PIN (change Antenna availability to user authentication) at the same time. If Internet connection is not available, the device can automatically dial a voice call to FI's number for account activation. If

TABLE 1-continued

Plug-in Seller and Mode of distribution	Plug-In Initial State and Antenna Availability Choice	Device Has No Screen/ Keyboard	Device Has Screen & keyboard
			wireless connection is not available as well (device is only a PDA), the user has to fallback to manual activation (see left)
WNO: Wireless Network Operator Ships plug-in bundled with host device, User can select his preferred host device and plugin is bundled with it if user would like to avail of this service	Plug-In is in Memory Mode, it is partially personalized (device signature of the host device loaded to prevent user from changing host device) while FV information is not loaded. Antenna Availability is set to Device Authentication (plug-in can only used with host device it is shipped with)	Not Applicable	Assumption: Device has a functional wireless connection. Operator offers a bundled wallet management application. When user clicks the wallet management application, the user is invited to sign-up with operator's partner FI for a new account. Once sign-up is successful, account data is downloaded Over the Air or Over the Internet to the plugin and it is activated for use Device can use multiple FIs in this scenario and store multiple FVs. User can select to enter a PIN for an FV in the wallet management application in order to convert Antenna availability to user and device authentication for that FV Plug-in is bound to a device signature. When removed from the device, the Antenna turns off and the plug-in turns into a simple mass memory stick. When Plug-in is inserted into another host device, the signature doesn't match and Antenna remains off.
WNO: Wireless Network Operator Ships plug-in as an accessory with an advice for compatible devices, User can select his preferred host device and attempt to operate his plug-in with, to avail of the service	Plug-In is in Memory Mode, it is unpersonalized. Antenna Availability is set to Network authentication is set to On. Plug-In will bind to first device it is inserted in and where network authentication is successful	Not Applicable	Assumption: Device has functional wireless connection. Plug-In will spawn an internet connection to the operator portal and the wallet management application will be downloaded upon user confirmation. User can reject download and choose to manually provision FV data by going to a third party wallet provider or directly to the FI website. Plug-In is bound to the device and to the network provider's network. If the same device is unlocked and used on another network, the plug-in will cease to operate and will revert back to memory mode. When removed from the device, the plug-in will revert to the memory mode.

TABLE 1-continued

Plug-in Seller and Mode of distribution	Plug-In Initial State and Antenna Availability Choice	Device Has No Screen/ Keyboard	Device Has Screen & keyboard
OEM 1: Cellphone manufacturer	Device Authentication (device comes bundled with a cellphone)	Not Applicable	Option A: Device Manufacturer offers a wallet management application, rest of the process remains as above Option B: Wireless Operator offers a wallet management application. User goes to the wireless operator portal and downloads this application Over the Air. The rest of the process then remains the same as above Option C: User navigates to a third party wallet management application (example paypal or Google). Sign up is offered to participating FIs and FVs are personalized on the plug-in Over the Internet Option D: User navigates to FI's website and activates a new account which is personalized over the Internet on the plug-in
OEM 2: Other manufacturer	Device Authentication	User has to cradle the device to the PC with an internet connection and sign-up on the PC by going to an FI's website directly. Account is downloaded over the internet via the cradle and then the device is activated. In this process, the plug-in is bound to the device signature. When removed from the host device, the antenna turns off When plugged into another device, the device signature fails and the device behaves like a mass memory device only	If the device has wireless connection (it is a wireless PDA): Same as above If the device has no wireless connection (it is an unconnected PDA): Same as left

The illustrated chart is for example purposes only. The user may activate an intelligent card using the same, some, or different processes without departing from the scope of this disclosure.

[0073] FIG. **7** is a flow chart illustrating an example method **700** for automatically bootstrapping an intelligent card in response to at least insertion into a host device. In general, an intelligent card may execute one or more authentication procedures prior to activation. Many of the steps in this flowchart may take place simultaneously and/or in different orders as shown. System **100** or system **200** may use methods with additional steps, fewer steps, and/or different steps, so long as the methods remain appropriate.

[0074] Method **700** begins at step **702** where insertion into a host device is detected. For example, the transaction card **112** may detect insertion into the mobile device **110**. If authentication is not required for any aspect of the intelligent card at decisional step **704**, then execution ends. If authentication is required for at least one aspect, then execution proceeds to decisional step **706**. If communication with the host device includes one or more errors, then, at step **708**, a failure is indicated to the user. In the example, the transaction card **112** may present an indication of a communication error to the user using the GUI **111**. If a communication error is not detected at decisional step **706**, then execution proceeds to decisional step **710**. In some implementations, the intelligent card uploads an SD driver to the host device. If the intelligent card only requires physical authentication, then execution proceeds to decisional step **712**. If the network authentication flag is not set to on, then, at step **714**, the antenna is turned on and the intelligent card is updated with host-device signature. As for the example, the transaction card **112** may activate the antenna for wireless transactions and update local memory with the host-device signature. If the network authentication flag is turned on at decisional step **712**, then, at step **716**, the

intelligent card transmits a request for the network ID to the host device. Next, at step **718**, the intelligent card retrieves a locally-stored network ID. If the stored network ID and the request network ID match at decisional step **720**, then the disk is activated at step **714**. If the two network ID's do not match, then the antenna is deactivated at step **722**.

[0075] Returning to decisional step **710**, if the authentication is not only physical authentication, then execution proceeds to decisional step **724**. If the authentication process includes device authentication, then, at step **726**, the intelligent card transmits a request for a network ID to the host device. At step **728**, the intelligent card retrieves a locally stored device signatures. If the intelligent card does not include at least one device signature, then execution proceeds to decisional step **734**. If the intelligent card includes one or more device signatures, then execution proceeds to decisional step **732**. If one of the device signatures matches the request network ID, then execution proceeds to decisional step **734**. If the signatures and the request network ID do not match, then execution proceeds to step **722** for deactivation. If user authentication is not included in the authentication process, then execution proceeds to decisional step **712** for physical authentication. If user authentication is included at decisional step **734**, then execution proceeds to step **738**.

[0076] Returning to decisional step **724**, if the authentication process does not include device authentication, then execution proceeds to decisional step **736**. If user authentication is not included in the process, then, at step **722**, the intelligent card is turned off. If user authentication is included, then, at step **738**, the intelligent card request a PIN number from the user using the host device. While the user authentication is described with respect to entering a PIN through the mobile host device, the user may be authenticated using other information such as biometric information (e.g., fingerprint). Again returning to the example, the transaction card **112** may present a request for the user to enter a PIN through the GUI **111**. At step **740**, the intelligent card retrieves a locally-stored PIN. If the request PIN and stored PIN match at decisional step **742**, then execution proceeds to decisional step **712** for physical authentication. If the request PIN and the stored PIN do not match at decisional step **742**, then execution proceeds to decisional step **744**. If the number of attempts have not exceeded a specified threshold, then execution returns to step **738**. If the number of attempts has exceed to the threshold, then the antenna is deactivated at step **722**. In the example, if the event that the transaction card **112** fails to authorize the device, network and/or user, the transaction card **112** may wirelessly transmit an indication to the associated financial institution using the cellular radio technology of the mobile host device **110**. In this case, the illustrated method **700** may be implemented as a fraud control process to substantially prevent unauthorized use of the transaction card **112**.

[0077] FIG. **8** is an example call flow **800** in accordance with some implementations of the present disclosure. As illustrated, the flow **800** includes a network **802**, a host device **804**, an intelligent card **806**, and a terminal **808**. The host device **804** is configured to communicate with the network **802** and includes a slot for insertion of the intelligent card **806**. The intelligent card **806** is configured to transmit commands to and receive data from a user interface application **810** executed by the host device **810** and execute transactions independent of the host device **810**. The card **806** includes a CPU **812** for executing transactions and a wireless chipset **814** for communicating with the terminal **808**. The CPU **812** executes a host controller/API interface **816** configured to transmits commands in a form compatible with the host device **804** and convert data from the host device **804** to a form compatible with the CPU **812**.

[0078] As illustrated, the flow **800** may include multiple sessions **820** between the host device **804** and the card **806** and between the card **806** and the terminal **808**. The session **820***a* illustrates a session managed by the card **806** using the network capabilities of the host device **810**. In this example, the card **806** transmits data for transmission through a cellular network connected to the host device **804**, and after receiving the cellular data, the host device **804** transmits the data to the network **802**. In response to receiving data from the network **802**, the host device **804** may automatically transmit the received data to the card **806**. In some implementations, the card **806** may transmit a request for a device signature to the host device **804** as illustrated in session **820***b*. For example, the card **806** may request the device signature during a bootstrapping process. The session **820***c* illustrates that a user may submit commands to the card **806** through the interface of the host device **804**. For example, the user may request that the disk display the user's transaction history through the interface of the host device **804**.

[0079] In some implementations, the card **806** may receive a command to activate or deactivate the antenna through the host device **804** as illustrated in session **820***d*. For example, a financial institution may identify irregular transactions and transmit a command through the network **802** to deactivate the card **806**. The card **806** may authorize a user by requesting a PIN using the host device **804**. As illustrated in session **820***e*, the user may submit a PIN to the card **806** using the interface of the host device **804**, and in response to an evaluation of the submitted PIN, the card **806** may present through the host device **804** an indication that the user verification is successful or has failed. In some implementations, a user and/or financial institution may request a transaction history of the card **806** as illustrated in session **820***f*. For example, a financial institution may transmit a request for the transaction history through the network **802** connected to the host device **804**, and in response to at last in the request, the card **806** may transmit the transaction history to the financial institution using the network **802** connected to the host device **804**. In some implementations, the user may present offline Web pages stored in the card **806** as illustrated in session **820**. For example, the card **806** may receive a request to present an offline Web page from the user using the host device **804** and present the offline page using the URL in the request. In some implementations, data stored in the memory of the card **806** may be presented through, for example, the host device **804** as illustrated in session **820***h*. For example, the user may request specific information associated with a transaction on a certain data and the card **806** may retrieve the data and present the data to the user using the host device **804**. In addition, the user may write data to the memory in the card **806** as illustrated in session **820***i*. For example, the user may update transaction data with an annotation, and in response to at least the request, the card **806** may indicate whether the update was a success or failure.

[0080] In regards to session between the card **806** and the terminal, the flow **800** illustrates the personalization session **820***k* and the transaction session **820***l*. In regards to personalization, a financial institution may personalize a card **806** with user credentials, user applications, Web pages, and/or other information as illustrated in session **820***k*. For example, the terminal **808** may transmit a provisioning request to the card **806** including associated data. The protocol translation **818** may translate the personalization request to a form compatible with the card **806**. In response to at least the request, the CPU **812** transmit an indication whether the personaliza-

tion was a success or not using the protocol translation **818**. Prior to the terminal executing a transaction, the terminal **808** may submit a transaction challenge to the card **806** as illustrated in session **820***l*. In this case, the card **806** may identify a device signature of the host device **804**, present associated data to the user through the host device **804**, and transmit the signature to the terminal **808** using the protocol translation **818**.

[0081] FIG. **9** is a flow chart illustrating an example method **900** for activating a wireless transaction system including an intelligent card. In general, an intelligent card may execute one or more activation processes in response to, for example, a selection from a user. Many of the steps in this flowchart may take place simultaneously and/or in different orders as shown. System **100** or system **200** may use methods with additional steps, fewer steps, and/or different steps, so long as the methods remain appropriate.

[0082] Method **900** begins at step **902** where a request to activate a transaction card is received. For example, the user may select a graphical element displayed through the GUI **111** of a mobile host device **110** in FIG. **1**. If an account activation is included at decisional step **904**, then at step **906**, a request to activate the associated financial account is wirelessly transmitted to financial institution using cellular radio technology of the host device. For example, the transaction card **112***d* of FIG. **2** may wireless transmit an activation request to the financial institution **106** using the cellular radio technology of the mobile host device **110***d*. If an account activation is not included, then execution proceeds to decisional step **908**. If card activation is not included, then execution ends. If card activation is included, then execution proceeds to decisional step **910**. If an activation code is not included, then at step **912**, one or more preprogrammed questions are presented to the user using the GUI of the host device. Returning to the initial example, the transaction card **112** may identify locally stored questions and present the questions to the user using the GUI **111** of the mobile host device **110**. At step **914**, locally-stored answers to the programmed questions are identified. Returning to decisional step **910**, if an activation code is included, then execution proceeds to decisional step **916**. If the activation code is manually entered by the user, then at step **918**, a request for the activation code is presented to the user through the GUI of the mobile host device. In the initial example, the transaction card **112** may present a request for an activation code such as a string of characters to the user through the GUI **111** of the mobile host device **110**. If the activation code is not manually entered by the user, then at step **920**, the transaction card wirelessly transmits a request for the activation code using the cellular radio technology of the host device. In the cellular example, the transaction card **112** may transmit a request to the financial institution using the cellular core network **202**. In either case, the locally-stored activation code is identified at step **922**. If the locally stored information matches the provided information at decisional step **924**, then at step **926**, the transaction card is activated. For example, the transaction card **112** may activate in response to at least a user entering a matching activation code through the GUI **111**. If the provided information does not match the locally stored information, then execution ends.

[0083] FIGS. **10**A and **10**B illustrate example cards **1000** and **1020**, respectively, for housing the transaction card **112** of FIG. **1**. For example, the transaction cards **112** may be inserted into the cards **1000** and **1020** during the personalization process and/or distribution processes. By executing personalization while inserted, the transaction cards **112** may be personalized using the same systems used to personalize smart cards with substantially no alterations. In other words, the cards **1000** and **1020** may have substantially similar dimensions as smart cards such that personalization systems may similarly process the cards **1000** and/or the **1020**. In FIG. **10**A, the card **1000** includes a slot **1002** formed to hold the transaction card **112**. For example, the slot **1002** may retain the transaction card using a frictional fit such as internal serrations. When retained in the slot **1002**, the transaction card **112** may be substantially flush with the front and back surfaces of the card **1000**. In FIG. **10**B, the card **1020** includes a pocket **1022** for retaining the transaction card **112** at least adjacent a surface of the card **1020**. In some implementations, the cards **1000** and **1020** may include magnetic strips to execute contact transactions.

[0084] A number of embodiments of the invention have been described. Nevertheless, it will be understood that various modifications may be made without departing from the spirit and scope of the invention. Accordingly, other embodiments are within the scope of the following claims.

What is claimed is:

1. A micro SecureDigital (microSD) payment card, comprising:

a microSD interface that connects to a microSD slot of a mobile host device;

a communication module that wirelessly receives RF signals from and transmits RF signals to a retail terminal;

secure memory that stores user credentials and a payment application used to execute financial transactions with the retail terminal, the user credentials and the payment application associated with a financial institution;

a user-interface module that presents and receives information through the GUI of the mobile host device; and

a processing module that executes the payment application using the user credentials in response to at least a transaction request received by the RF module and transmits at least one transaction response to the retail terminal based, at least in part, on the executed payment application.

2. The microSD payment card of claim **1**, the user credentials associated with one of a credit card account, a checking account, a debit account, a gift account, or a prepaid account.

3. The microSD payment card of claim **1**, wherein the processing module comprises:

a security module that generate the transaction response based, at least in part, on the user credentials and the payment application; and

an operating system with a runtime environment that executes the payment application independent of the mobile host device.

4. The microSD payment card of claim **1**, wherein the communication module comprises a protocol translation module, an antenna tuning circuit, a power circuit, and a miniature antenna tuned to exchange wireless data with the retail terminal.

5. The microSD card of claim **1**, wherein the user-interface module presents information associated with the requested transaction through the GUI of the mobile host device.

6. The microSD card of claim **5**, further comprising a locally-executed Web server that generates the presented information based, at least in part, on at least one of real-time content during the transaction, locally-stored offline content, or online content associated with the financial institution.

7. The microSD card of claim **5**, wherein the user-interface module further presents a request for user identification including at least one of a Personal Identification Number

(PIN), user ID and password, or biometric signature through the GUI of the mobile host device, the processing module further verifies the submitted user identification with user identification locally stored in the secure memory prior executing the requested transaction.

8. The microSD card of claim **7**, the processing module further deactivates the communication module in response to at least a number of PIN entry events exceeding a threshold.

9. The microSD card of claim **1**, wherein the communication module selectively switches an RF antenna between an activate state and an inactivate state in response to at least an event.

10. The microSD card of claim **9**, wherein the switching event includes a selection through the GUI of the mobile host device.

11. The microSD card of claim **1**, wherein the wireless RF signals comprise at least one of contactless signals, proximity signals, Near Field Communication (NFC) signals, Bluetooth signals, Ultra-wideband (UWB) signals, or Radio Frequency Identifier (RFID) signals.

12. The microSD card of claim **1**, wherein the communication module further comprises a protocol translation module that translates signals between wireless protocols compatible with the retail terminal and an internal transaction application.

13. The microSD card of claim **1**, further comprising a cryptographic module that decrypts received signals prior to processing by the payment application and encrypts at least part of the transaction response prior to wireless transmission.

14. The microSD card of claim **1**, further comprising an authentication module that authenticates at least one of a network of the mobile host device, the mobile host device, or a user.

15. The microSD card of claim **14**, the authentication module further deactivates the antenna in response to at least a failure to authenticate the at least one of the network of the mobile host device, the mobile host device, or the user.

16. The microSD card of claim **1**, wherein the microSD payment card is initialized in response to at least insertion in the microSD slot of the host device.

17. The microSD card of claim **1**, further comprising a bootstrap module that executes one or more authentication processes in response to at least insertion in the microSD slot of the mobile host device.

18. The microSD card of claim **17**, wherein the one or more authentication processes authenticates at least one of a network, a mobile host device, or a user.

19. The microSD credit card of claim **1**, further comprising an activation module that activates the microSD card and transmits to the financial institution a request to activate an associated user account in response to at least a user request or an initial insertion into the mobile host device.

20. The microSD card of claim **19**, wherein the microSD card is activated based, at least in part, on a user manually entering an activation code through the GUI of the mobile host device.

21. The microSD card of claim **1**, further comprising an Application Program Interface (API) that wirelessly communicates with a financial institution using cellular radio technology of the mobile host device.

22. The microSD card of claim **1**, wherein the microSD card executes the requested transaction independent of loading a driver onto the mobile host device.

23. The microSD card of claim **1**, wherein the microSD card emulates a contactless payment card when communicating with the retail terminal.

24. The microSD card of claim **1**, further comprising a power module that receives power from the mobile host device and RF signals received by the communication module and automatically switches to a passive mode in response to at least loss of power from the mobile host device.

25. The microSD card of claim **1**, wherein an enterprise at least associated with the financial institution uploads personalization data prior to activation, wherein the personalization data includes the user credentials, the payment application and at least one of operational flags, rule table or user interface.

26. The microSD card of claim **25**, the communication module further operable to update the personalization data after activation in response to at least one of a wireless signal including secure update instructions or a wired signal through a client connected to the microSD payment card.

27. The microSD card of claim **1**, the processing module further operable to transmit a notification to the financial institution using the mobile host device in response to an activity violating one or more fraud control rules.

28. The microSD card of claim **1**, the processing module further operable to populate a Web page with user credentials for executing an Internet transaction in response to at least a request from a client connected to the microSD card.

29. The microSD card of claim **1**, wherein the microSD card substantially maintains attributes of the mobile host device.

30. The microSD card of claim **29**, wherein the attributes include at least one of dimensions, accessibility to peripherals, charging, battery life, signal strength, access to the GUI, connectivity to wireless networks, or interface capability with clients.

31. The microSD card of claim **29**, wherein the substantially maintained attributes do not void certification by regulatory authorities or a warranty of the mobile host device.

32. A microSD card, comprising:

a microSD interface that connects to a microSD slot of a mobile host device;

a communication module that wirelessly receives RF signals from and transmits RF signals to a retail terminal;

secure memory that stores user credentials and a payment application used to execute financial transactions with the retail terminal, the user credentials and the payment application associated with a financial institution;

a security module that identifies the payment application and user credentials in response to at least a transaction request received by the communication module and encrypts a transaction response prior to transmitting to the retail terminal; and

an operating system with a runtime environment that executes the payment application to generate the transaction response independent of the mobile host device.

33. The microSD card of claim **32**, further comprising a user-interface module that presents and receives information through a GUI of the mobile host device;

34. The microSD card of claim **32**, the user credentials associated with one of a credit card account, a checking account, gift account, or a prepaid account.

* * * * *