US006963552B2

(12) **United States Patent**
Sabat, Jr. et al.

(10) **Patent No.: US 6,963,552 B2**
(45) **Date of Patent: Nov. 8, 2005**

(54) **MULTI-PROTOCOL DISTRIBUTED WIRELESS SYSTEM ARCHITECTURE**

(75) Inventors: **John Sabat, Jr.**, Merrimack, NH (US); **Peter Yelle**, Chelmsford, MA (US)

(73) Assignee: **ADC Telecommunications, Inc.**, Eden Prairie, MN (US)

(*) Notice: Subject to any disclaimer, the term of this patent is extended or adjusted under 35 U.S.C. 154(b) by 841 days.

(21) Appl. No.: **09/818,986**

(22) Filed: **Mar. 27, 2001**

(65) **Prior Publication Data**

US 2001/0036163 A1 Nov. 1, 2001

Related U.S. Application Data

(60) Provisional application No. 60/192,186, filed on Mar. 27, 2000.

(51) **Int. Cl.**[7] **H04Q 7/24**
(52) **U.S. Cl.** **370/338**; 370/328
(58) **Field of Search** 370/328–331, 370/342–344, 203, 238, 280, 297, 310, 323, 370/335, 337, 346, 347, 258, 376, 404, 467, 370/477, 310.2, 338, 352, 353, 354, 396, 370/398, 400, 401, 422, 465, 466, 469; 709/229, 709/230; 455/447, 458, 456.1

(56) **References Cited**

U.S. PATENT DOCUMENTS

5,303,287 A		4/1994	Laborde	379/59
5,321,736 A		6/1994	Beasley	379/58
5,381,459 A		1/1995	Lappington	379/56
5,400,391 A		3/1995	Emura et al.	379/58
5,461,627 A	*	10/1995	Rypinski	370/346
5,519,691 A	*	5/1996	Darcie et al.	370/331
5,546,397 A	*	8/1996	Mahany	370/310
5,566,168 A	*	10/1996	Dent	370/323
5,621,786 A		4/1997	Fischer et al.	379/60
5,627,879 A		5/1997	Russell et al.	379/59
5,642,405 A		6/1997	Fischer et al.	379/60
5,644,622 A		7/1997	Russell et al.	455/422
5,657,374 A		8/1997	Russell et al.	370/328
5,732,076 A		3/1998	Ketseoglou et al.	370/347
5,761,619 A		6/1998	Danne et al.	455/422
5,781,541 A		7/1998	Schneider	370/335
5,781,859 A		7/1998	Beasley	455/423
5,802,173 A		9/1998	Hamilton-Piercy et al.	379/56.2
5,805,983 A		9/1998	Naidu et al.	455/67.6
5,809,395 A		9/1998	Hamilton-Piercy et al.	455/4.1
5,822,324 A		10/1998	Kostresti et al.	370/487
5,852,651 A		12/1998	Fischer et al.	379/56.2
5,907,544 A	*	5/1999	Rypinski	370/337
5,987,014 A	*	11/1999	Magill et al.	370/335

(Continued)

FOREIGN PATENT DOCUMENTS

EP 876073 11/1998

(Continued)

Primary Examiner—Phirin Sam
(74) *Attorney, Agent, or Firm*—Fogg & Associates, LLC

(57) **ABSTRACT**

An open access signal distribution system in which a variety of wireless voice, data and other services and applications are supported. The open access system makes use of a distributed Radio Frequency (RF) distribution network and associated network entities that enable the system operator to employ a wireless infrastructure network that may be easily shared among multiple wireless service providers in a given community. The open access system provides the ability for such operators and service providers to share the infrastructure regardless of the specific RF air interface or other signal formatting and/or managing messaging formats that such operators choose to deploy.

28 Claims, 9 Drawing Sheets

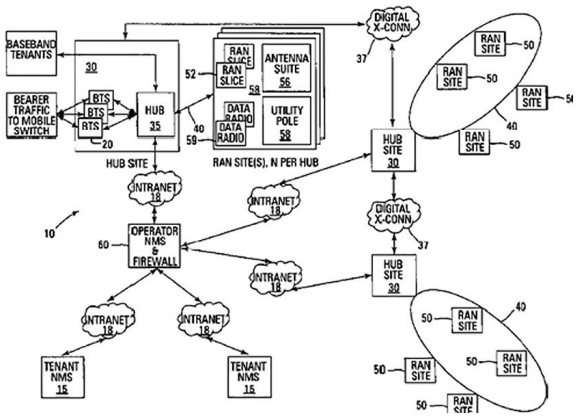

U.S. PATENT DOCUMENTS

6,034,950	A *	3/2000	Sauer et al.	370/310.2
6,108,550	A *	8/2000	Wiorek et al.	455/447
6,226,274	B1 *	5/2001	Reese et al.	370/280
6,667,973	B1 *	12/2003	Gorshe et al.	370/376
6,729,929	B1 *	5/2004	Sayers et al.	455/446
6,768,745	B1 *	7/2004	Gorshe et al.	370/421
2002/0167954	A1 *	11/2002	Highsmith et al.	370/406
2003/0157943	A1 *	8/2003	Sabat, Jr.	455/456
2004/0010609	A1 *	1/2004	Vilander et al.	709/230

FOREIGN PATENT DOCUMENTS

GB	2253770	9/1992
GB	2289198	11/1995
GB	2315959	2/1998
GB	2320 653 A	6/1998
WO	WO 95/33350	12/1995
WO	WO 96/28946	9/1996
WO	WO 97/16000	5/1997
WO	WO 97/32442	9/1997
WO	WO 98/24256	6/1998
WO	WO 99/37035	7/1999

* cited by examiner

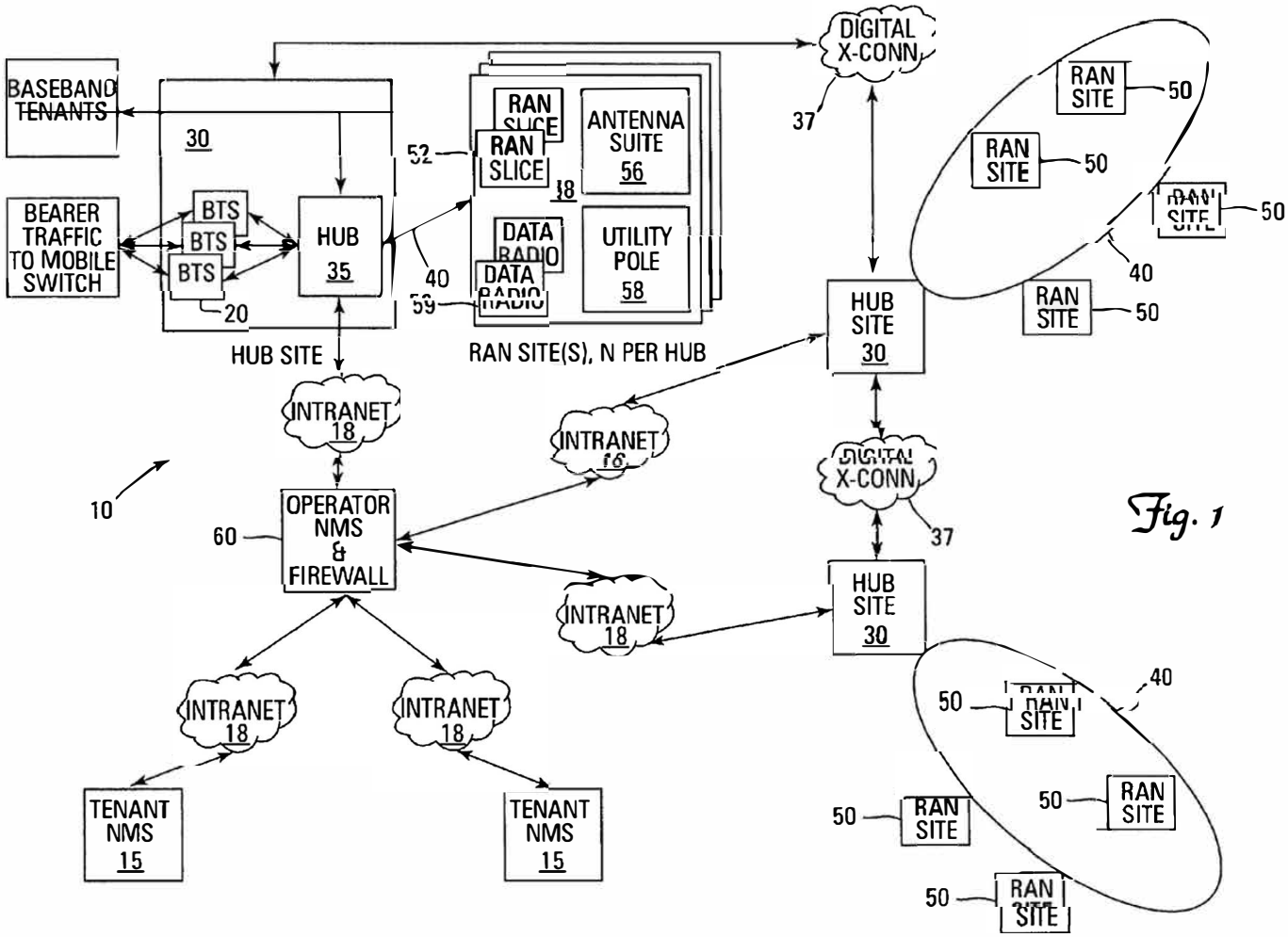
BASEBAND TENANTS
30
BEARER TRAFFIC TO MOBILE SWITCH
BTS
BTS
BTS
20
HUB 35
HUB SITE
52
RAN SLICE
RAN SLICE
18
ANTENNA SUITE 56
DATA RADIO
DATA RADIO
UTILITY POLE 58
40
59
RAN SITE(S), N PER HUB
DIGITAL X-CONN
37
RAN SITE
50
RAN SITE
50
RAN SITE
50
40
RAN SITE
50
HUB SITE 30
INTRANET 18
INTRANET 18
DIGITAL X-CONN
37
10
OPERATOR NMS & FIREWALL
60
INTRANET 18
HUB SITE 30
INTRANET 18
INTRANET 18
TENANT NMS 15
TENANT NMS 15
40
50
RAN SITE
50
RAN SITE
50
RAN SITE
50
RAN SITE

Fig. 1

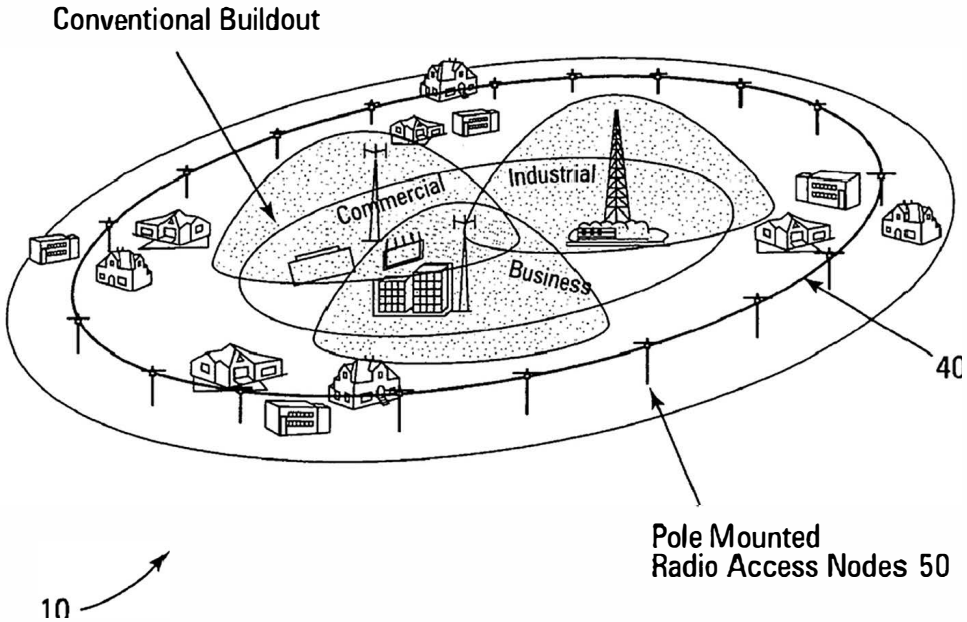
Conventional Buildout
Commercial
Industrial
Business
40
Pole Mounted
Radio Access Nodes 50
10

Fig. 2

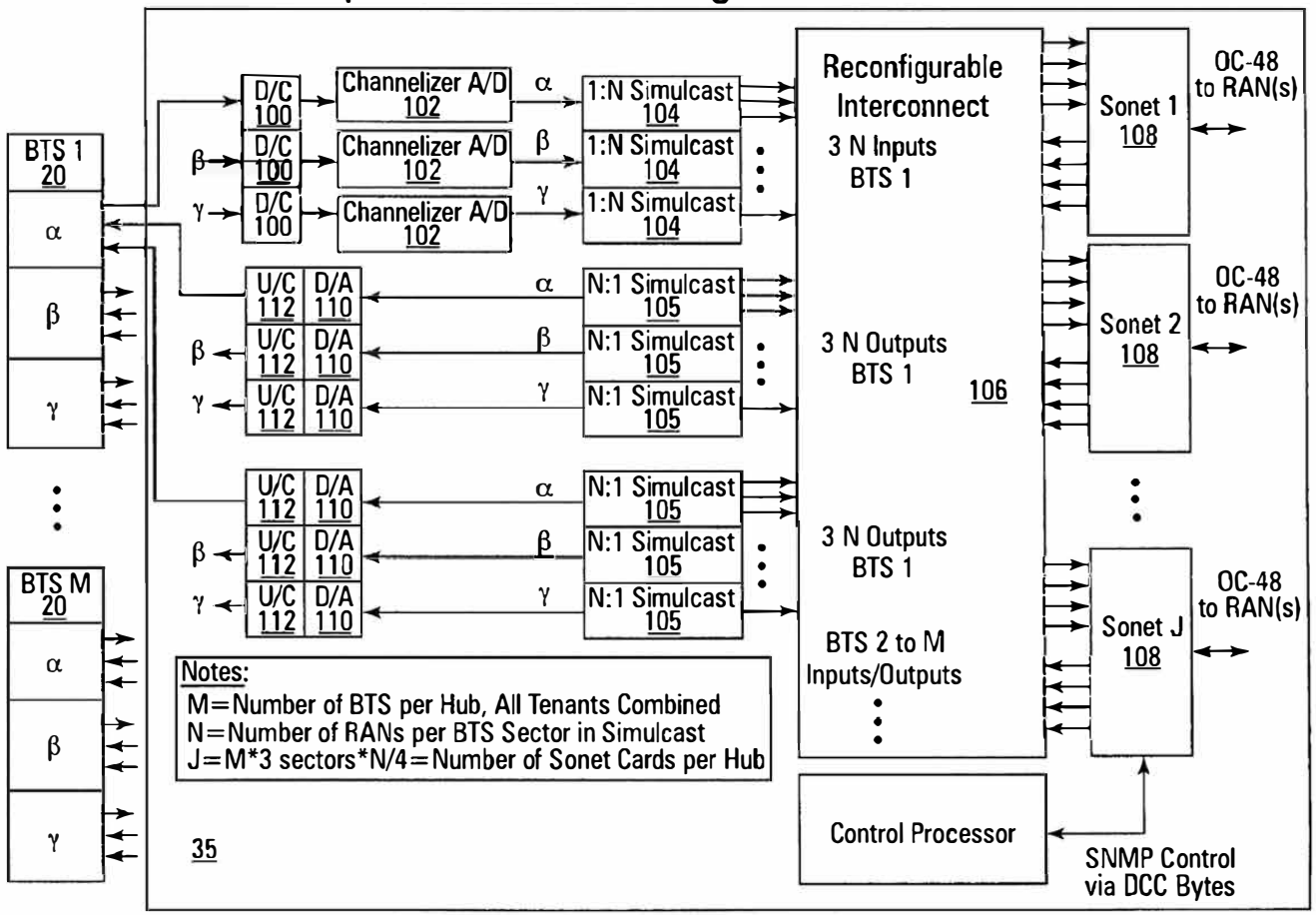
Open Access Hub Signal Path
BTS 1
20
α
β
γ
BTS M
20
α
β
γ
D/C
100
Channelizer A/D
102
1:N Simulcast
104
U/C
112
D/A
110
N:1 Simulcast
105
Reconfigurable
Interconnect
3 N Inputs
BTS 1
3 N Outputs
BTS 1
106
3 N Outputs
BTS 1
BTS 2 to M
Inputs/Outputs
Sonet 1
108
Sonet 2
108
Sonet J
108
OC-48
to RAN(s)
Control Processor
SNMP Control
via DCC Bytes
Notes:
M=Number of BTS per Hub, All Tenants Combined
N=Number of RANs per BTS Sector in Simulcast
J=M*3 sectors*N/4=Number of Sonet Cards per Hub
35

Fig. 3

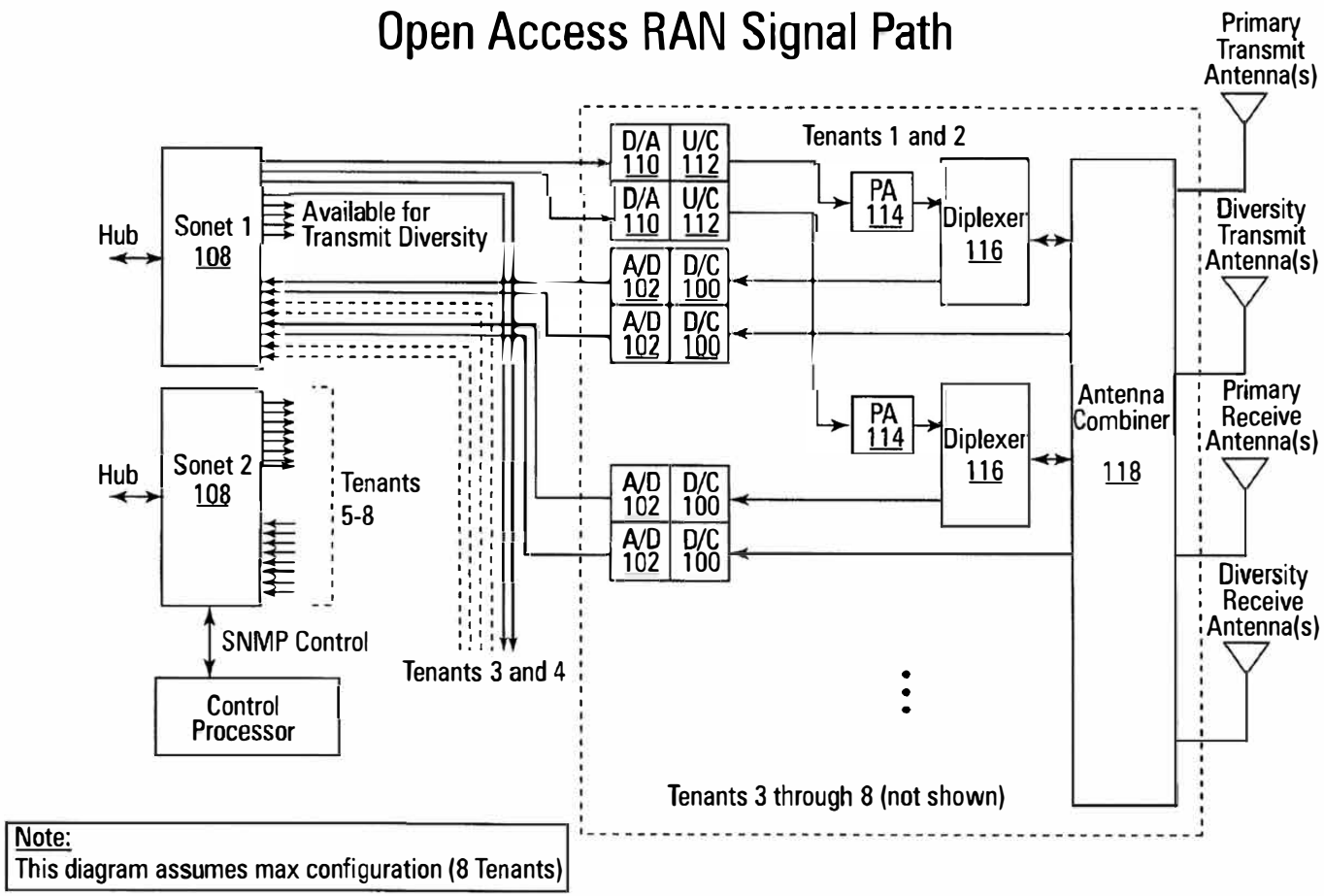

Note:
This diagram assumes max configuration (8 Tenants)

Fig. 4

Simulcast Varied Equalize Reverse Link Budgets
and to Balance With Forward Link Budget

	CDMA	TDMA	GSM1900
Reverse Link			
Mobil Transmit Power	23 dBm	28 dBm	30 dBm
RAN Sensitivity	-120 dBm	-111 dBm	-110 dBm
Allowable Reverse Path Loss without Simulcast	143 dBm	139 dBm	140 dBm
Number in Simulcast	8	3	4
Allowable Reverse Path Loss with Simulcast	134 dBm	134 dBm	134 dBm
Forward Link			
RAN Transmit Power per Traffic Channel	20 dBm	32 dBm	32 dBm
Mobil Sensitivity less Interfenence Margin	-114 dBm	-102 dBm	-102 dBm
Allowable Forward Path Loss	134 dBm	134 dBm	134 dBm

Fig. 5

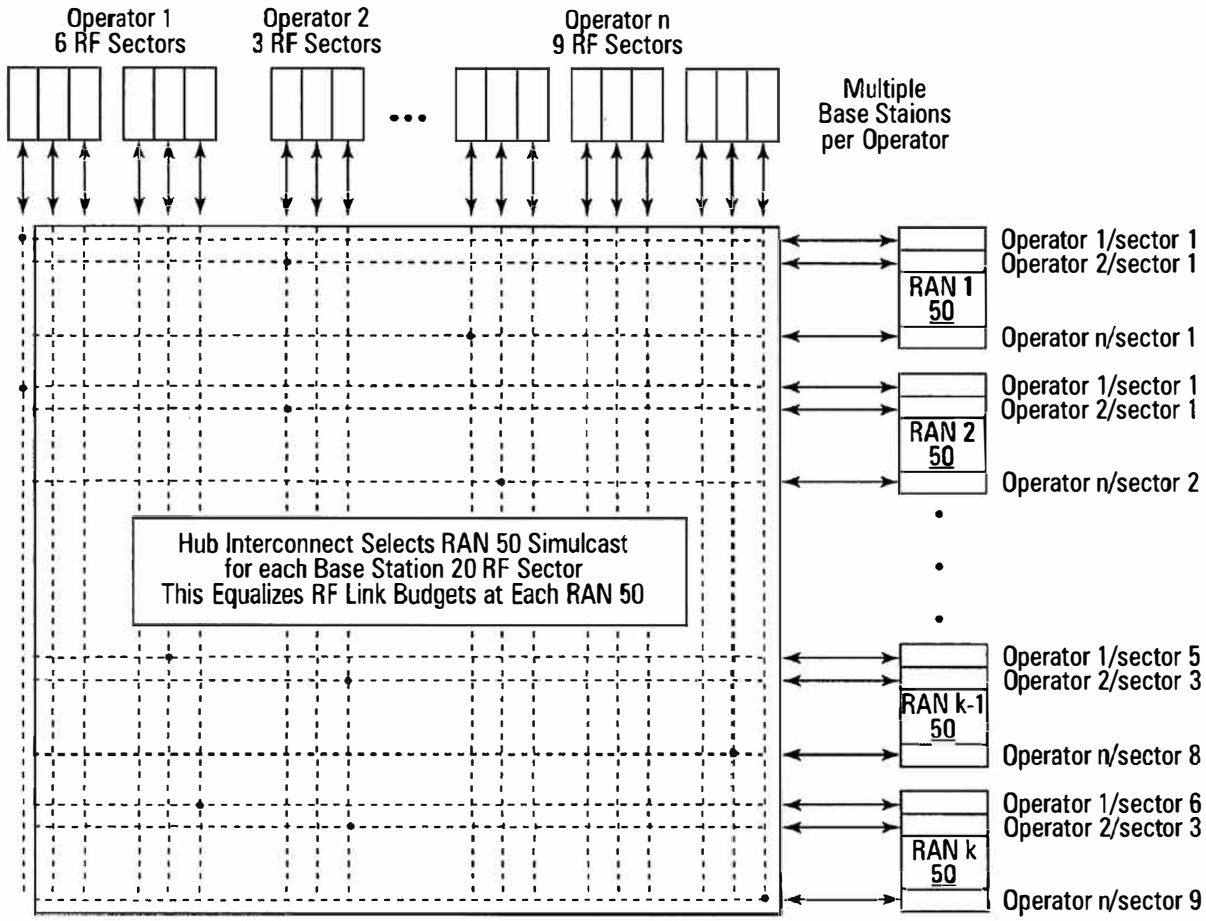
Operator 1
6 RF Sectors
Operator 2
3 RF Sectors
Operator n
9 RF Sectors
Multiple
Base Staions
per Operator
Hub Interconnect Selects RAN 50 Simulcast
for each Base Station 20 RF Sector
This Equalizes RF Link Budgets at Each RAN 50
RAN 1
50
Operator 1/sector 1
Operator 2/sector 1
Operator n/sector 1
RAN 2
50
Operator 1/sector 1
Operator 2/sector 1
Operator n/sector 2
RAN k-1
50
Operator 1/sector 5
Operator 2/sector 3
Operator n/sector 8
RAN k
50
Operator 1/sector 6
Operator 2/sector 3
Operator n/sector 9

Fig. 6

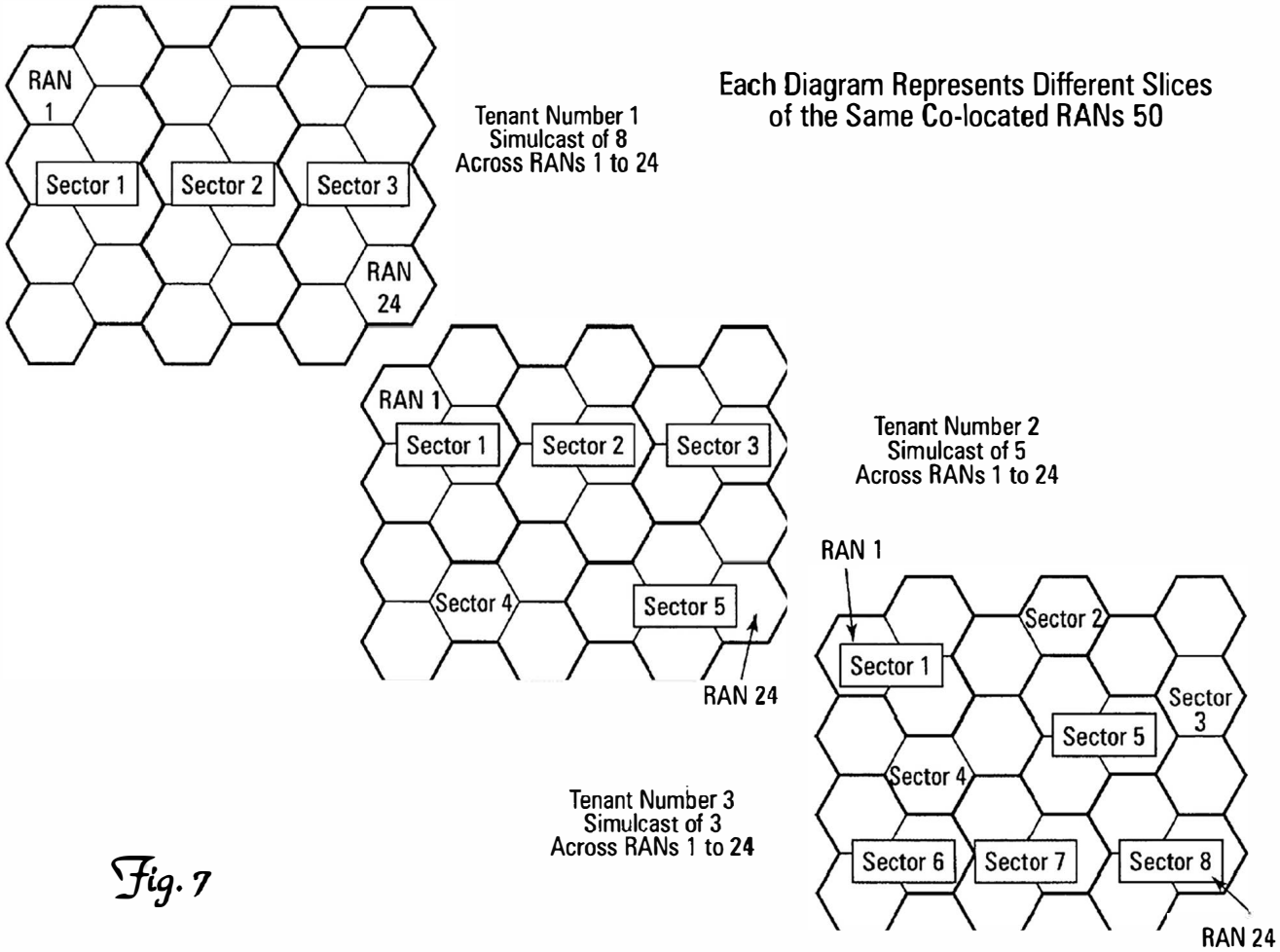
Each Diagram Represents Different Slices of the Same Co-located RANs 50
RAN 1
Sector 1
Sector 2
Sector 3
RAN 24
Tenant Number 1 Simulcast of 8 Across RANs 1 to 24
RAN 1
Sector 1
Sector 2
Sector 3
Sector 4
Sector 5
RAN 24
Tenant Number 2 Simulcast of 5 Across RANs 1 to 24
RAN 1
Sector 1
Sector 2
Sector 3
Sector 4
Sector 5
Sector 6
Sector 7
Sector 8
RAN 24
Tenant Number 3 Simulcast of 3 Across RANs 1 to 24

Fig. 7

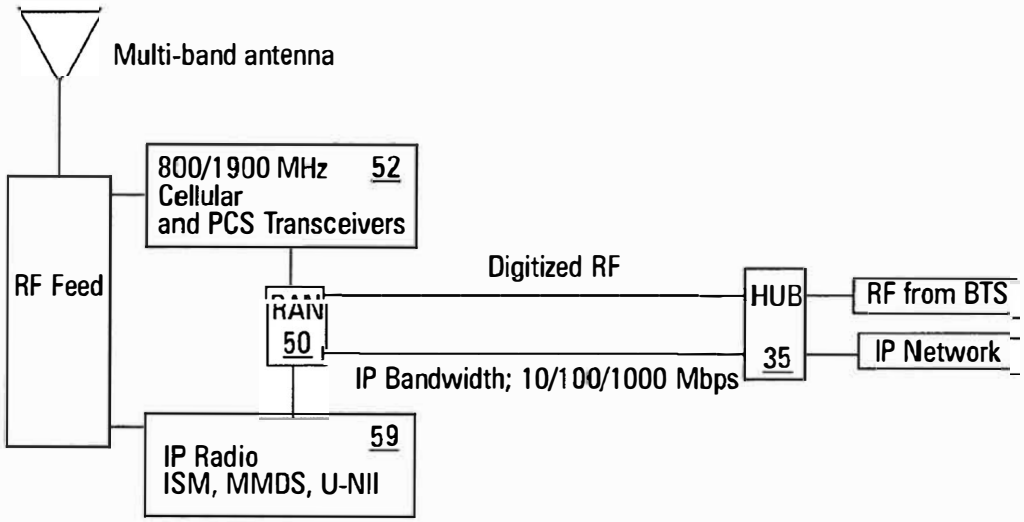
Multi-band antenna
RF Feed
800/1900 MHz Cellular and PCS Transceivers
52
RAN
50
Digitized RF
HUB
35
RF from BTS
IP Network
IP Bandwidth; 10/100/1000 Mbps
IP Radio ISM, MMDS, U-NII
59

Fig. 8

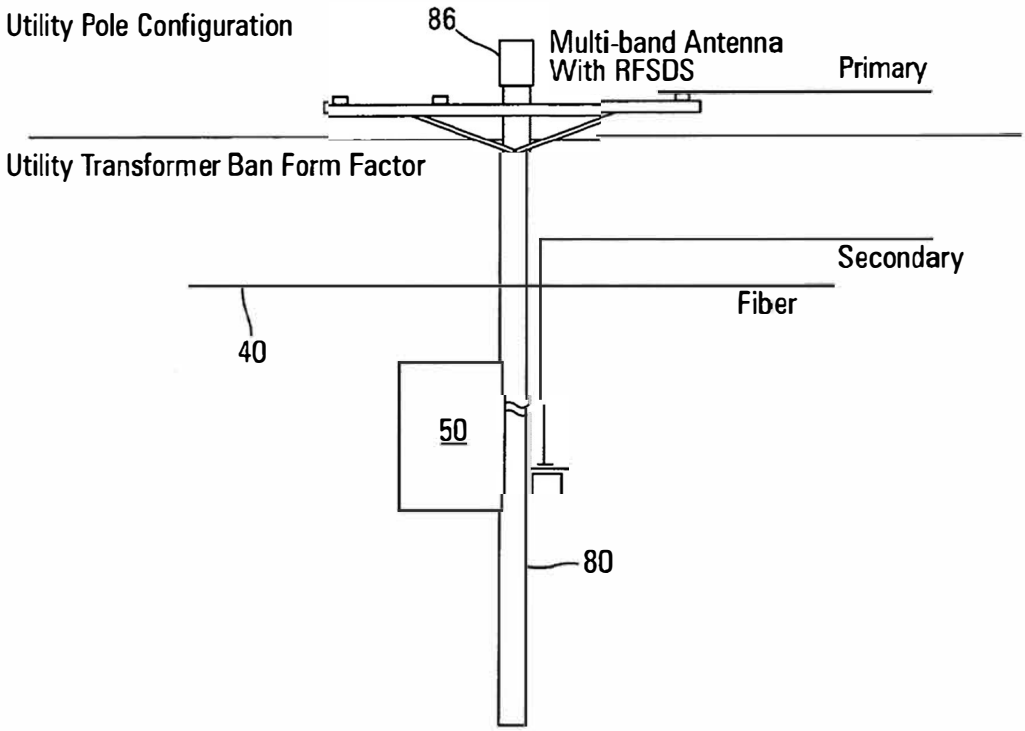
Utility Pole Configuration
86
Multi-band Antenna
With RFSDS
Primary
Utility Transformer Ban Form Factor
Secondary
Fiber
40
50
80

Fig. 9

MULTI-PROTOCOL DISTRIBUTED WIRELESS SYSTEM ARCHITECTURE

RELATED APPLICATION(S)

This application claims the benefit of U.S. Provisional Application No. 60/192,186, filed on Mar. 27, 2000. The entire teachings of the above application(s) are incorporated herein by reference.

BACKGROUND OF THE INVENTION

The wireless telecommunication industry continues to experience significant growth and consolidation. In the United States, market penetration is near 32% with approximately 86 million users nationwide. In 1999 the total number of subscribers increased 25% over the previous year, with the average Minutes of Use (MOU) also increasing by about 20% per user. If one considers growth in the digital market, in as short as three years, the digital subscriber base has grown to 49 million users, or approximately equal to the installed number of users of analog legacy systems. Even more interesting is an observation by Verizon Mobile that 70% of their busy hour traffic (an important system design parameter) is digital traffic, although only approximately 40% of the total number of their subscribers are digital users. The Verizon Mobile observation indicates the digital subscriber will drive the network design through its increasing usage, whereas the analog user is truly a passive "glovebox" subscriber.

Similar growth has been witnessed in other countries, especially in Northern and Western Europe, where market penetration is even higher, approaching 80% in some areas, and digital service is almost exclusively used.

With the availability of Personal Communications Service (PCS) frequencies in the United States, and additional continuing auctions of spectrum outside of the traditional 800–900 MegaHertz (MHz) radio band, the past few years have also seen increased competition among service providers. For example, it has also been estimated that 88% of the US population has three or more different wireless service providers from which to choose, 69% have five or more, and about 4% have as many as seven service providers in their local area.

In 1999 total wireless industry revenue increased to $43B, representing an approximate 21% gain over 1998. However, a larger revenue increase would have been expected given the increased subscriber count and usage statistics. It is clear that industry consolidation, the rush to build out a nationwide footprint by multiple competing service providers, and subsequent need to offer competitive pricing plans has had the effect of actually diminishing the dollar-per-minute price that customers are willing to pay for service.

These market realities have placed continuing pressure on system designers to provide system infrastructure at minimum cost. Radio tower construction companies continue to employ several business strategies to serve their target market. One approach, their historical business strategy, is build-to-suit (i.e., at the specific request and location as specified by a wireless operator). But some have now taken speculation approach, where they build a tower and then work with local government authorities to force new service providers to use the already existing towers. This speculation build approach, spawned by the zoning by-law backlash, is actually encouraged by communities to mitigate the "unsightly ugliness" of cellular phone towers. This is seemingly the best alternative, since Federal laws no longer permit local zoning authorities to completely ban the deployment of wireless infrastructure in a community. Often the shared tower facility is zoned far removed from residential areas, in more commercialized areas of town, along heavily traveled roads, or in more sparsely populated rural sections. But providing such out of the way locations for towers often does not fully address each and every wireless operator's capacity or coverage need.

Each of the individual wireless operators compete for the household wireline replacement, and as their dollar-per-MOU is driven down due to competition in the "traditional" wireless space, the "at home" use is one of the last untapped markets. As the industry continues to consolidate, the wireless operator will look for new ways to offer enhanced services (coverage or products) to maintain and capture new revenue.

Considering the trends that have appeared over recent years, when given the opportunity to displace the household wireline phone with reliable wireless service, a wireless service operator may see their average MOUs increase by a factor of 2 to 4, thereby directly increasing their revenue potential 200 to 400%. In order to achieve this, the wireless operator desires to gain access throughout a community as easily as possible, in both areas where wireless facilities are an allowed use and in where they are not, and blanket the community with strong signal presence.

SUMMARY OF THE INVENTION

Certain solutions are emerging that provide an alternative to the tower build out approach. In particular, wireless signal distribution systems employ a distribution media such as a cable television infrastructure or optical fiber data network to distribute Radio Frequency (RF) signals. This allows the capacity of a single base station to be distributed over an area which is the equivalent of multiple traditional cellular sites without degradation in coverage or call quality.

However, even these systems have a shortcoming in that they are typically built out for one selected over the air protocol and are controlled by a single service provider. Thus, even with such systems as they are presently known, it becomes necessary to build out and overlay multiple base stations and multiple signal distribution networks for multiple service providers.

The present invention is an open access signal distribution system in which a variety of wireless voice, data and other services and applications are supported. The open access system makes use of a distributed Radio Frequency (RF) distribution network and associated network entities that enable the system operator to employ a wireless infrastructure network that may be easily shared among multiple wireless service providers in a given community. The open access system provides the ability for such operators and service providers to share the infrastructure regardless of the specific RF air interface or other signal formatting and/or managing messaging formats that such operators choose to deploy.

In one configuration, the present invention consists of a system in which a base station interface located at a central hub location converts radio frequency signals associated with multiple base stations, of the same or even different wireless service providers, to and from a transport signaling format. A shared transport medium, such as a fiber optic data network or the like is then used for transporting the converted signals from the hub location to a number of remote access node locations.

The access node locations each have Radio Access Node equipment located therein. The Radio Access Nodes (RANs) are each associated with a particular coverage area. The RANs have within them a number of slice modules, with each slice module containing equipment that converts the radio signals required for a particular service provider to and from the transport signaling format.

In a preferred embodiment, the transport medium may be an optical fiber telecommunications network such as provided through the SONET type digital frame formatting. In such a configuration, the SONET data formatting is arranged so that certain data frames are associated with the slices in a given Radio Access Node on a time slotted basis. In such a configuration, signal down converter modules convert the radio frequency signals associated with each base station to an Intermediate Frequency (IF) signal. Associated analog to digital (A/D) modules also located at the hub then convert the Intermediate Frequency signals to digital signals suitable for handling by a transport formatter that formats the converted digital signals to the proper framing format for the SONET digital transport.

Other transport media may be used such as Internet Protocol (IP) over Digital Wavelength Division Multiplexing (DWDM).

In one other aspect the invention concerns the aggregation of different Radio Frequency (RF) signaling formats onto a common transport mechanism. In this embodiment, a first and second base station operate according to respectively, first and second different wireless system air interfaces. A transport medium interface converts the radio frequency signals transmitted by the first and second base stations to a common transport medium. The first and second base station may optionally also be operated under the control of two different service providers. In this arrangement, a plurality of remotely located Radio Access Nodes (RANs) each provide radio signal coverage to a predetermined portion of a total system coverage area. Each Radio Access Node is coupled to receive signals from the common transport medium. Each Radio Access Node also contains a first and second slice module associated with the respective one of the first and/or second base station. Each slice module contains a suite of radio transmitter, amplifier and antenna equipment as required by its associated air interface.

In another aspect the present invention concerns equalizing power levels of Radio Frequency signals radiated by the Radio Access Nodes at levels appropriate for respectively different air interfaces. In particular, in such a system a first and second base station are located at a central location and operate according to respectively different wireless system air interfaces. A transport medium interface converts the Radio Frequency signals transmitted by the first and second base stations to a common transport medium signaling format. At a plurality of remote locations Radio Access Nodes (RANs) are located. Each Radio Access Node is coupled to receive signals from the common transport medium. Each Radio Access Node contains at least a first and second slice module that is associated with and responsible for converting signals associated with the first and second base stations.

In this instance, the invention includes means for equalizing the receive sensitivities of the Radio Access Nodes at levels for the appropriate for the respectively different air interfaces, such as by managing the number of RANs in simulcast depending upon the particular air interface.

This configuration permits for example, the deployment for the set of shared RANs at common RAN remote locations without having to deploy multiple RAN locations for different air interfaces even when such air interfaces have different receive sensitivities and coverage distances. Thus the Radio Access Nodes for two or more different air interfaces may be co-located throughout the coverage system area reducing the overall system build out requirements.

In yet another aspect, the present invention is a method for providing access to radio equipment distributed throughout a coverage area to multiple wireless communication service providers. This method involves the steps of accepting requests for radio signal distribution service from the service providers, the request specifying a desired air interface and an indication of which portions of a coverage area the particular air interface is to be supported. The service provider then installs common base station equipment operating with the air interface specified by the service provider at a central location with the base station equipment being co-located with base station equipment specified by other wireless service providers. The commonly located base station equipment is then coupled to receive traffic signals from a signaling network used by the wireless communication service provider, the signaling network carrying such transport formatted Radio Frequency signals over a common transport medium. A data processor then controls the connection of transport signal to specific Radio Access Nodes as specified by the wireless system operator.

BRIEF DESCRIPTION OF THE DRAWINGS

The foregoing and other objects, features and advantages of the invention will be apparent from the following more particular description of preferred embodiments of the invention, as illustrated in the accompanying drawings in which like reference characters refer to the same parts throughout the different views. The drawings are not necessarily to scale, emphasis instead being placed upon illustrating the principles of the invention.

FIG. **1** is a block diagram of an open access system according to the invention.

FIG. **2** illustrates one possible deployment for the open access system.

FIG. **3** is a more detailed diagram of a hub signal path for the open access system.

FIG. **4** is a more detailed diagram of a Radio Access Node signal path.

FIG. **5** shows one example of a calculation to determine how simulcast operation can be coordinated to equalize a reverse link budget and provide balancing with a forward link budget.

FIG. **6** is a more detailed view of a cross connect providing for the ability to connect multiple base stations for different wireless operators to a network of Radio Access Nodes.

FIG. **7** is a diagram illustrating how RAN slices may be allocated to different tenants and sectors in simulcast.

FIG. **8** is a more detailed view of one possible configuration for the hubs and RANS over which both the transport traffic signals and control signaling may be carried.

FIG. **9** is a detailed view of one possible antenna configuration.

DETAILED DESCRIPTION OF A PREFERRED EMBODIMENT

Turning attention now to the drawings more particularly, FIG. **1** is a diagram of an open access system **10**. The open access system **10** is an open access network supporting a multitude of wireless voice, data, video services and appli-

cations. Wireless Service Providers (WSP) and Wireless Internet Service (WISP) Providers, commonly known as tenants, may use open access system **10** to either enhance or replace existing networks, wired or wireless, or to develop new networks.

Open access system **10** is a multi-frequency, multi-protocol Radio Frequency (RF) access network, providing cellular, Personal Communication Services (PCS), and wireless data coverage via a distributed RF access system. Open access system **10** is comprised of base stations **20**, located at hub sites **30**. The base stations **20** are connected via high speed datalinks **40** to distributed RF access nodes (RANs) **50**. The system **10** is, in effect, a signal distribution network and associated management entities that enable a network operator to deploy a wireless infrastructure network that may easily be shared among multiple wireless system operators in a given community. The open access network may be shared regardless of the specific RF air interface formatting and management messaging formats that each wireless operator chooses to deploy.

FIG. **2** depicts one possible deployment scenario for the open access system **10**. As shown, the system consists of a multiple Radio Frequency (RF) Access Node **50** (RAN) units that may be located at relatively lower height locations such as utility poles. The open access network **10** distributes RF signals to and from the RANs, using a shared transport media **40** such as an optical fiber using high speed transport signaling. The physical deployment of the open access system is thus quite different from the higher radio towers required in a conventional system.

Returning attention to FIG. **1**, the hub **35** provides the hardware and software interfaces between the high speed data link **40** and the individual wireless carrier base stations **20**. The base stations **20** are considered to be original equipment manufacturer (OEM) type equipment to be provided and/or specified by the tenant **15** and are not provided as part of the open access system **10** itself. Hub **35** co-locates with the base stations **20** at a designated hub site **30**. In a maximum configuration, a 3-sector base station **20** connects to 24 RAN Units **50**, via an open access Hub **35**. Hub **35** can be expanded to connect multiple base stations **20** (one or multiple wireless carriers) and their associated RAN Units **50**.

RAN units **50** are distributed throughout a given community in accordance with the network operator's RF plan. RAN Units **50**, along with associated antennas **56**, are typically installed on utility poles **58**, and connect to Hub Unit **35** via a fiber optic cable **40**.

Network Management System **60** provides remote monitoring and control of the open access network by the network operator via the open access system **10**. Network Management System **60** also allows for the network operator to pass selected control or status information concerning the open access network **10** to or from the individual wireless carriers or tenants. By "tenant" it is meant to refer to the wireless carrier, Wireless Service Provider (WSP), or other business entity that desires to provide wireless service to end customers.

The open access system **10** supports essentially any wireless protocol to be an open Access platform. In one configuration, open access system **10** supports the multiple 800/1900 MHz wireless service providers, and wireless data providers who require last mile access to their targeted customers, all at the same time. In another configuration, open access system **10** supports the lower frequency 400 and 700 MHz bands and the WCS/ISM/MMDS, U-NII wireless data bands.

In a preferred configuration, the open access network consists of radio access nodes (RAN) **50** distributed to achieve the desired RF signal presence and a hub **35** and high speed data link **40**, which interconnects the base station RF signals with the RANs **50**.

The distributed architecture is comprised of multi-protocol, frequency-independent radio access nodes **50**. In the preferred embodiment at the present time, each RAN **50** supports from 1 to 8 operators, commonly referred to as tenants **15**, of various protocols and frequencies. It should be understood that other configurations could support a smaller or greater number of tenants per RAN **50**. Within each RAN **50**, the wireless service provider "tenants" have typically leased space for the service provider to install corresponding individual radio elements in a RAN slice **52**. RANs **50** connect to a centralized base station location **30** where the tenants **15** connect to through an open access HUB **35** to the specific tenant's base station electronics. Each HUB **35** can scale to support one to three sectors of a base station **20**. It should be understood that base stations with a greater number of sectors may also be supported.

RANs **50** are interconnected via fiber links **40** to centrally located HUB sites **30** and associated base stations **20**. RANs **50** wide area distribution is logically a "horizontal tower" with access provided to a single "tenant" or shared amongst multiple tenants (wireless service providers). The generic architecture supports scaling from a single operator to supporting up to multiple operators across the multiple frequency bands per shelf. Multiple shelves may be stacked to serve additional tenants, as needed.

HUB **35** and RAN **50** network elements incorporate a System Network Management Protocol (SNMP) communication scheme to facilitate integration with the Host operator's network management system **60**. This allows easy and complete communication across the open access system **10** with a high level of control and visibility.

Referring now to FIG. **3**, an RF signal is transmitted from a BTS **20** to open access hub **35**. The RF signal is of any bandwidth up to typically 15 MHz (future bandwidths may be greater) and follows the hub signal path as shown in FIG. **3**. The signal is down converted to a 50 MHz (+/−7.5 MHz) Intermediate Frequency (IF) signal by the down converter (D/C) **100**. The IF signal is then converted to a 14 byte stream, at least at 42.953 Msps, by analog-to-digital (A/D) channelizer **102**. Two control bits are added to the stream at a field programmable gate array (FPGA) within the A/D channelizer **102**. The 16 byte stream, still at 42.953 Msps, is then serialized using 8B/10B encoding producing a 859 Mbps bit stream or an STS-12 type transport signal. The STS-12 signal is then distributed along a number of paths equal to the number of RANs in simulcast for each BTS sector. The STS-12 signal is preferably transmitted to the designated RAN Units **50** by interconnect **106** cross-connecting the STS-12 signal to a 4:1 multiplexer **108** that converts the STS-12 signal to an OC-48 signal. In a preferred embodiment, as shown in FIG. **1**, a base station **20** located at any hub site **30** can transmit its associated signal to any RAN Unit **50** using a digital cross-connect **37** connected between Hubs **35**. In one example, lower rate signals (STS-3, 4, etc.) may be combined into higher rate shared transport signals (e.g. OC-192).

Referring to FIG. **4**, the OC-48 signal enters a multiplexer **108** where the signal is converted from an OC-48 signal back to a STS-12 signal. The STS-12 signal is then digital-to-analog (D/A) converted to a 50 MHz (+/−7.5 MHz) signal by the D/A Channelizer **110**. The 50 MHz (+/−7.5 MHz) signal is up converted **112** (U/C) to the required RF signal

between. The RF signal is then power amplified (PA) **114** at its associated RF frequency and transmitted through diplexer **116** that couples transmit and receive signals to the same antenna. The RF signal is then radiated by the antenna.

Referring to FIG. **4**, an RF signal is received by an antenna or antenna array and the signal is then down converted (D/C) **100** to a 50 MHz (+/−7.5 MHz) signal. The RF signal is then converted to a 14 bit stream, at least at 42.953 Msps, in the (A/D) channelizer **102**. Two control bits are added to the bit stream at a digital filter implemented in a Field Programmable Gate Array (FPGA) within the A/D channelizer **102**. The 16 byte stream, at least at 42.953 Msps, is serialized using 8B/10B encoding producing a 859 Mbps bit stream or STS-12 signal. The STS-12 signal is then combined with the other tenant signals by a 4:1 multiplexer **108** that converts the STS-12 signal to an OC-48 signal. This signal is then transmitted to the designated open access hub **35**.

Referring to FIG. **3**, the OC-48 signal is received at the open access hub **35** at the multiplexer **108** that converts the OC-48 signal to a STS-12 signal. The STS-12 signal is then cross-connected through interconnect **106** to a designated BTS **20**. The STS-12 signal is summed up to 8:1 with signals from other RANs in the same simulcast and is then D/A converted 110 to a 50 MHz (+/−7.5 MHz) IF signal. It should be understood that in other configurations, more than 8 signals could be summed together. The 50 MHz signal IF signal is the up converted (U/C) **112** to the desired radio carrier and forwarded to the BTS **20**. Providing for two receive paths in the system **10** allows for receive diversity.

The location of the RANs will be selected to typically support radio link reliability of at least 90% area, 75% at cell edge, as a minimum, for low antenna centerline heights in a microcellular architecture. The radio link budgets, associated with each proposed tenant, will be a function of the selected air protocol and the RAN **50** spacing design will need to balance these parameters, to guarantee a level of coverage reliability.

Because of differences in air interface performance and mobile unit transmit powers/receive sensitivities the open access system **10** requires additional design considerations. For example, an optimal RAN location grid spacing for an IS-136 TDMA protocol is not the same as for an IS-95 CDMA protocol.

To minimize the number of RANs **50**, open access multi-protocol wireless infrastructure requires that all the participating wireless protocols share common geographic transmit/receive locations. These locations are referred to as shared RANs **50**, and the distance at which they can be located from any serviceable mobile unit sets the nodes' maximum separation. However, this distance limit is different for each wireless protocol due to performance differences in their respective air interface power or link budgets. A simple, but non-optimum, approach is to determine the RAN **50** locations on the wireless protocol requiring the closest spacing (i.e. smallest RF link budget). The base stations **20** located at the central hub sites **30** are then optically connected to the co-located RAN sites **50** giving each protocol the same coverage footprint per base station sector. This approach is highly non-optimum for those protocols having larger link budgets and will yield heavily overlapped coverage areas. Similarly, basing RAN spacing on the larger link budget will yield coverage gaps for the weaker link protocols.

According to the present invention, differences between the wireless protocols' link budgets are equalized through simulcasting of multiple RANs sites **50**. Simulcasting allows a wireless infrastructure provider to reduce the link budget of the RAN **50** for higher power protocols to match those of the others, while increasing the net coverage range of the associated base station sectors **20**. A reduction in a RANs **50** link budget (and therefore coverage range) is offset by the increase in the number of RAN's **50** that can be simultaneously served by the associated base station sectors **20**. This maintains the base station **20** coverage area for the protocols with a large link budget while maintaining the closer RAN **50** spacing required for those protocols with a small link budget. At the same time, the reverse link can be brought into balance with the forward link for a wide variety of forward RF carrier power levels.

FIG. **5** shows a simplified link budget for three example collocated protocols: IS-136 (TDMA), GSM 1900 and CDMA. It should be understood that the same principles apply to other wireless air interfaces such as: PEN, GSM, 3G (GPRS/EDGE), CDMA 2000, W-CDMA, etc. The protocol with the lowest intrinsic reverse link budget (IS-136) is balanced with the CDMA protocol through the use of a larger number of RANs in the simulcast group for CDMA. All of the protocols' simulcast is also collectively scaled to balance with the forward link. For a higher-power deployment than is shown in FIG. **5** (similar to that of a large tower) the least robust air interface typically uses a simulcast of one and all other air interfaces scale up from there. Since the illustrated scenario is for is a lower power microcellular build-out, all protocols use a non-unity simulcast. The forward transmit powers for each RF carrier are properly scaled to equalize the forward link budgets of the various protocols. Call capacity per geographic area is finally established by selecting the number of RF carriers based upon the final simulcast ratio.

The determination of parameters may proceed as follows.

Forward and reverse RF link budgets are first established for each of the wireless protocols of interest. At this point, simulcast is not entered as a factor into the analysis.

The wireless protocol with the smallest link budget is then identified and its coverage area and capacity are optimized.

The system build-out, lower power (and smaller size) power amplifiers are used to minimize cost and size of the installation. Simulcast of multiple RANs **50** is used to bring the forward and reverse paths in balance for the above identified wireless protocol. This establishes the allowable RF path loss and therefore the physical spacing for the shared RANs **50**.

For each of the other collocated protocols, the number RANs **50** in simulcast are selected to match the baseline link budget established above. Each protocol will have a different simulcast number. The sensitivity at each RAN **50** will change as

$10\log_{10}$(the number of RANs **50** in simulcast).

The forward transmit power levels are then adjusted to bring the forward and reverse paths into agreement.

The number of simultaneous RF carriers is selected for each protocol based upon the call capacity required in the geographic coverage area. Changing the number of carriers does not affect the link balance or the number of RANs **50** in simulcast.

Referring to FIG. **6**, this type of infrastructure build-out requires a distributed RF system capable of cross-connecting multiple base stations **20** from different tenants or Wireless Service Providers (WSPs) to a network of RANs **50** using distribution ratios that differ for each wireless protocol. A network that does not support this aspect of the invention would simply connect the base station sectors for all the WSPs to the same complement of RANs **50**. Sector 1/WSP

1 through sector 1/WSP n would all connect to the same RANs 50. Similarly, sector 2/WSP 1 through sector 2/WSP n connect to a different but common group of RANs 50.

Referring to FIGS. 6 and 7, the system described by this invention selects a different simulcast scheme for each individual sector of each wireless operator and the total collection of RANs 50 distributed through a geographic coverage area. For example: Sector1/WSP1 does not necessarily connect to the same complement of RANs 50 as sector 1/WSP 2 through sector 1/WSP n. There may be only partial or even no overlap between the connectivity assignments due to the variable simulcast ratios across the differing protocols. Sector 2/WSP 1 not only does not fully overlap with sector 2/(WSP 2 through n) but also may also partially overlap with sector 1/(2 though n) in RAN assignments.

Referring in particular to the example shown in FIGS. 6 and 7, WSP or tenant 1 is operating with a CDMA protocol and therefore is simulcasting a group of 8 RANs within a total number of 24 RANs 50. Each RF sector is connected to a different grouping of 8 RANs. The illustrated drawing in FIG. 7 is for a group of 24 contiguous cells showing how the three tenants may share them.

Tenant 2 is operating with a simulcast group size of 5. Thus 5 different RANs are allocated to each of the 5 sectors for this tenant. Note that since simulcast number of 5 is not an integer divisor of the number of cells in the RAN group, that number being 24 in this example, sector 3 has only 4 cells allocated to it. Tenant 3 is operating with the simulcast group size of 3 and thus is operating with 8 sectors, each having 3 RANs associated with it.

The hub interconnect in FIG. 6 then selects RAN 50 simulcast groupings for each sector based upon the desired groupings desired for each tenant. This permits for equalization of the radio frequency link budgets in each RAN 50 group.

NMS 60 distributes individual alarms to the appropriate tenants, and maintains secure transmission for each tenant, whereas each tenant 15 is provided access to only their own respective system, for monitoring and control purposes. The open access product allows an operator to customize the RAN 50 RF parameter settings to control the radio link environment, such as signal attenuation, gain, and other methods for strong signal mitigation.

In sector configuration of the system, the Hub/RAN ratio is configurable from 1 to 8 RANs per BTS sector. The RANs 50 is remote configurable through the open access operator's NMS 60, to support what is commonly referred to as sector reallocation. The sector allocation is defined by the hosted wireless service provider's traffic loading analysis and controlled by the inputs from the specific tenant's NMS 15 via the open access system 10 intranet 18.

The actual RAN 50 cell radius will be largely a function of final antenna radiation center above ground.

Returning attention now to FIGS. 1 and 2 briefly, in general, the data link uses one or more fiber optic connections between a hub 35 and one or more RAN's 50. Data link uses a mix of electrical multiplexing, wavelength multiplexing, and multiple fibers to support the bandwidth requirements of the configuration in a cost-effective manner. Data link design should optimize its cost by using the best combination of different multiplexing schemes based on physical fiber costs, leased fiber costs and technology evolution. Data link supports whole RF band transportation (digitized RF), IP packets, and other traffic as need for open access data transmission, system management and control.

The data link 40 connects a Hub 35 and multiple RAN's 50 using either a Ring or Star network topology, or possibly a mix of the two. In one configuration, open access system 10 should support up to, for either a ring or star topology, at least several miles of fiber length. The actual fiber lengths will be guided by optical path link budgets and specific RF protocol limits.

Referring to FIG. 8, in addition to combining digitized RF for common transport, this invention allows the combination of digitized RF with conventional packet data (e.g. IP Packets). This allows the concurrent support of packet driver wireless radios 59 co-located at the RANs with RAN slices 52, the latter which support BTSs 20. The data radios 59 do not require a BTS 20 at the hub.

The data link is available to support connecting fixed wireless data radios 59 fitted in a RAN 50 to a centrally located router in HUB site 30. In one configuration, IP packet traffic provides 10Mbps, scalable up to 100 Mbps, to be shared amongst the multiple RAN data tenants. Networking architecture supports modularity and scalability for increased data rates. The data link supports multiple data radios at 1 to 25 Mbps data rates per data radio tenant.

Referring to FIG. 9, a utility pole antenna 86 is preferred as being unobtrusive and similar in dimension to the utility pole 80. Antenna 86 at least blends in with its immediate surroundings. The utility pole multi-band antenna 86 typically fits at least within a 12" diameter by 72" tall volume. The minimum pole height to the antenna base is typically at least 31 ft. agl.

In the system the multi-band antenna capability addresses 800, 1900, and at least provides volume for wireless data bands. In a preferred configuration, the antenna is multi-band and provides radiating aperture to cover all the listed bands such as, 800, 1900, WCS/ISM/MMDS and U-NII. Antenna design, antenna sizing and performance is specific for each deployment configuration.

The system configurations are modular and scalable from a single WSP application to a multi-WSP tenancy, for both the RF transceiver assemblies and the data link configurations. The system configurations have the ability to add tenants after initial install in one-tenant steps.

While this invention has been particularly shown and described with references to preferred embodiments thereof, it will be understood by those skilled in the art that various changes in form and details may be made therein without departing from the scope of the invention encompassed by the appended claims.

What is claimed is:

1. A system for distributing radio frequency signals in a physical area in which multiple wireless service providers wish to provide service, the system comprising:

a plurality of wireless base stations collocated at a hub location, the base stations receiving and transmitted radio frequency signals, with at least two of such base stations operating with radio frequency signals according to two different air interfaces;

a base station interface, also located at the hub location, for converting the radio frequency signals associated with the base stations to and from a transport signaling format;

a shared transport medium, for transporting the converted signals from the hub location to a plurality of remote access node locations, wherein the shared transport medium is an optical fiber and the shared transport medium uses SONET formatting;

a plurality of radio access nodes located at the remote access node locations, the radio access nodes each associated with a partial coverage area corresponding to only a portion of a total system coverage area, and

the radio access nodes connected to the shared transport medium; and the radio access nodes further each comprising:

a plurality of slice modules, with each slice module containing equipment for converting received radio frequency signals formatting according to a selected one of the air interfaces to the transport signaling format and from the transport signaling format to the selected one of the air interfaces; wherein a corresponding connection between a base station and a slice module is allocated a unique SONET frame.

2. A system for distributing radio frequency signals in a physical area in which multiple wireless service providers wish to provide service, the system comprising:

a plurality of wireless base stations collocated at a hub location, the base stations receiving and transmitted radio frequency signals, with at least two of such base stations operating with radio frequency signals according to two different air interfaces;

a base station interface, also located at the hub location, for converting the radio frequency signals associated with the base stations to and from a transport signaling format;

a shared transport medium, for transporting the converted signals from the hub location to a plurality of remote access node locations, wherein the shared transport medium is an optical fiber and the shared transport medium uses SONET formatting;

a plurality of radio access nodes located at the remote access node locations, the radio access nodes each associated with a partial coverage area corresponding to only a portion of a total system coverage area, and the radio access nodes connected to the shared transport medium; and the radio access nodes further each comprising:

a plurality of slice modules, with each slice module containing equipment for converting received radio frequency signals formatting according to a selected one of the air interfaces to the transport signaling format and from the transport signaling format to the selected one of the air interfaces; wherein the radio access nodes are arranged in a logical ring, and wherein the data frames associated with the slices in a given radio access node are dropped and added to the ring at the respective slice.

3. A system for distributing radio frequency signals in a physical area in which multiple types of wireless communication service is to be provided, the system comprising:

a plurality of wireless base stations collocated at a hub location, the base stations receiving and transmitted radio frequency signals, with at least two of such base stations operating with radio frequency signals according to two different air interfaces as specified by at least two difference wireless service types;

a plurality of down-converter (D/C) modules, a down-converter associated with each of the collocated base stations, each down-converter converting the radio frequency signals transmitted by the respective base station to an intermediate frequency carrier signal;

a plurality of analog to digital (A/D) modules, also located at the hub location, for converting the intermediate frequency carrier signals to digital signals;

a simulcast transport formatter, for receiving digital signals from the A/D modules and converting them to transport formatted signals;

a plurality of transport media, for carrying the transport formatted signals to remote access node locations;

a transport media distribution network, for coupling each of the transport formatted signals to a selected sub-set of the remote access node locations;

a plurality of radio access nodes located at the remote access node locations, the radio access nodes each associated with a partial coverage area corresponding to only a portion of a total system coverage area, and the radio access nodes connected to the transport medium, the remote access nodes arranged in a plurality of sub-networks; and

wherein a least one of the radio access nodes further comprises:

a plurality of slice modules, with each slice module containing equipment for converting received signals from the transport signal format to a selected one of the air interfaces.

4. A system as in claim 3, wherein the number of slice modules located in at least one of the radio access nodes corresponds to a number of different service providers which are to provide service in the corresponding partial coverage area.

5. A system as in claim 3, wherein at least two of the base stations collocated at the hub location are operated by two different wireless system service providers.

6. A system as in claim 4, wherein at least two of the slice modules in at least one of the radio access nodes contain equipment as specified by an air interface used by two different wireless system service providers.

7. A system as in claim 3, wherein at least two of the base stations operate in respective different radio frequency bands.

8. A system as in claim 3, wherein at least two of the transmitted radio frequency signals are of two different bandwidths.

9. A system as in claim 3, wherein the shared transport medium is an optical fiber.

10. A system as in claim 9, wherein the shared transport medium uses SONET formatting.

11. A system as in claim 10, wherein a corresponding transport connection between a base station and a slice module is allocated a unique SONET frame.

12. A system comprising:

a first base station generating radio frequency signals according to a first wireless system air interface;

a second base station generating radio frequency signals according to a second wireless system air interface;

a transport medium interface for converting radio frequency signals transmitted by the first and second base stations to a common transport medium;

a shared transport medium, for transporting the converted radio frequency signals transmitted by the first and second base stations, wherein the shared transport medium is an optical fiber and the shared transport medium uses SONET formatting;

a plurality of remotely located radio access nodes, each radio access node associated with a predetermined portion of a total system coverage area, and each radio access node coupled to receive signals from the common transport medium, each radio access node containing at least first and second slice modules associated with the respective first and second base stations;

a first slice module containing a suite of radio transmitter, amplifier, and antenna equipment as specified by the first air interface; and

a second slice module containing a suite of radio transmitter, amplifier, and antenna equipment as specified by the second air interface, wherein a corresponding trans-

port connection between a base station and a slice module is allocated a unique SONET frame.

13. A system as in claim **12**, wherein at least two of the base stations operate in respective different radio frequency bands.

14. A system as in claim **12**, wherein at least two of the transmitted radio frequency signals are of two different bandwidths.

15. A system comprising:

a first base station operating according to first wireless system air interfaces;

a second base station operating according to second wireless system air interfaces;

a transport medium interface for converting radio frequency signals transmitted by the first and second base stations to a common transport medium;

a plurality of remotely located radio access nodes, each radio access node associated with a predetermined sub-area portion of a total system coverage area, and each radio access node coupled to receive signals from the common transport medium, each radio access node containing at least first and second slice modules associated with the respective first and second base stations; and

means for equalizing sensitivity levels of radio frequency signals radiated by the radio access nodes at levels appropriate for the respective different air interfaces.

16. A system as in claim **15**, wherein the air interfaces are selected from the group consisting of advanced mobile phone service (AMPS), CDMA, and TDMA.

17. A system as in claim **15**, wherein the means for equalizing sensitivity levels is a balanced simulcast such that radio access nodes for two different air interfaces may be collocated throughout the system coverage area.

18. A system as in claim **15**, wherein the means for equalizing sensitivity levels further comprises:

means for determining which of the respective air interfaces requires a lowest intrinsic link budget level;

means for setting transmit power levels in a selected one of the radio access nodes depending upon such lowest intrinsic link budget level; and

means for simulcasting signals associated with other air interfaces for radio access nodes in adjacent sub-areas.

19. A system as in claim **15**, wherein the radio access nodes further each comprise:

a plurality of slice modules, with each slice module containing equipment for converting received radio frequency signals formatting according to a selected one of the air interfaces to a transport signal format and from the transport signal format to the selected one of the air interfaces.

20. A system as claim **15**, wherein the number of slice modules located in each partial system coverage area corresponding to the number of different service providers for which wireless communication service is to be provided in the respective partial system coverage area.

21. A system as in claim **15**, wherein the first and second base stations are operated by two different wireless system service providers.

22. A system as in claim **15**, wherein the first and second base stations operate in respective different radio frequency bands.

23. A system as in claim **15**, wherein the first and second base stations provide transmitted radio frequency signals of two different bandwidths.

24. A method for providing multiple wireless communication service providers with access to radio equipment distributed throughout a coverage area, the method comprising the steps of:

accepting requests for distribution service from the multiple service providers, the requests specifying a desired air interface for wireless communication from among a plurality of available air interfaces, and an indication of which portions in the coverage area the particular air interface is to be supported;

installing first base station equipment operating with the air interface specified by the a service provider at a central location, the first base station equipment being collocated with additional base station equipment specified by other wireless service providers;

coupling the first base station equipment to receive traffic signals from a signaling network used by the service provider;

converting the signals transmitted by a first base station to a common signaling format;

coupling the common signaling format signals to a common transport medium;

locating a plurality of radio access nodes through the coverage area, with at least one radio access node located in each portion of the coverage area, the radio access nodes further containing radio equipment for receiving signals from the common transport medium and converting such signals to radio frequency signals; and

controlling, with a data processor, the connection of transport signals to specific radio access nodes as specified by the plurality of wireless system operators, wherein the common transport medium is an optical fiber and the common transport medium uses a SONET format, wherein a corresponding transport connection between a base station and a slice module is allocated a unique SONET frame.

25. A method as in claim **24**, wherein at least one of the radio access nodes further comprises:

a plurality of slice modules corresponds to a number of different service providers which are to provide service in the corresponding partial coverage area.

26. A method as in claim **24**, wherein at least two of the slice modules in at least one of the radio access nodes contain equipment as specified by an air interface used by two different wireless system service providers.

27. A method as in claim **24**, wherein at least two of the base stations operate in respective different radio frequency bands.

28. A method as in claim **24**, wherein at least two of the transmitted radio frequency signals are of two different bandwidths.

* * * * *