US 20090180426A1

(19) United States

(12) Patent Application Publication

(10) Pub. No.: US 2009/0180426 A1

(43) Pub. Date: Jul. 16, 2009

Sabat et al.

(54) DIGITAL DISTRIBUTED ANTENNA SYSTEM

(76) Inventors: **John Sabat**, Merrimack, NH (US); **David Porte**, Harvard, MA (US)

Correspondence Address:
Myers Andras Sherman LLP
19900 MacArthur Blvd., Suite 1150
Irvine, CA 92612 (US)

(21) Appl. No.: **12/340,383**

(22) Filed: **Dec. 19, 2008**

Related U.S. Application Data

(60) Provisional application No. 61/008,763, filed on Dec. 21, 2007.

Publication Classification

(51) **Int. Cl.**
H04W 4/00 (2009.01)
H04B 10/00 (2006.01)

(52) **U.S. Cl.** **370/328**; 398/116

(57) **ABSTRACT**

A digital distributed antenna system (DDAS) that regains the capability to perform simulcast to multiple simulcast groups while using a base station's direct digital output is provided. The User Plane data is adapted for simulcast and also for eliminating time delay ambiguities across multiple simulcast digital radios. In addition, the Control and Management Plane is aggregated across multiple remote units to allow a non-modified donor digital base station to control simulcast groups. The result is a low cost digital DAS that can efficiently distribute the capacity of a digital base station to solve coverage and capacity requirements in a manner similar to that now accomplished using a traditional base station with RF in/out.

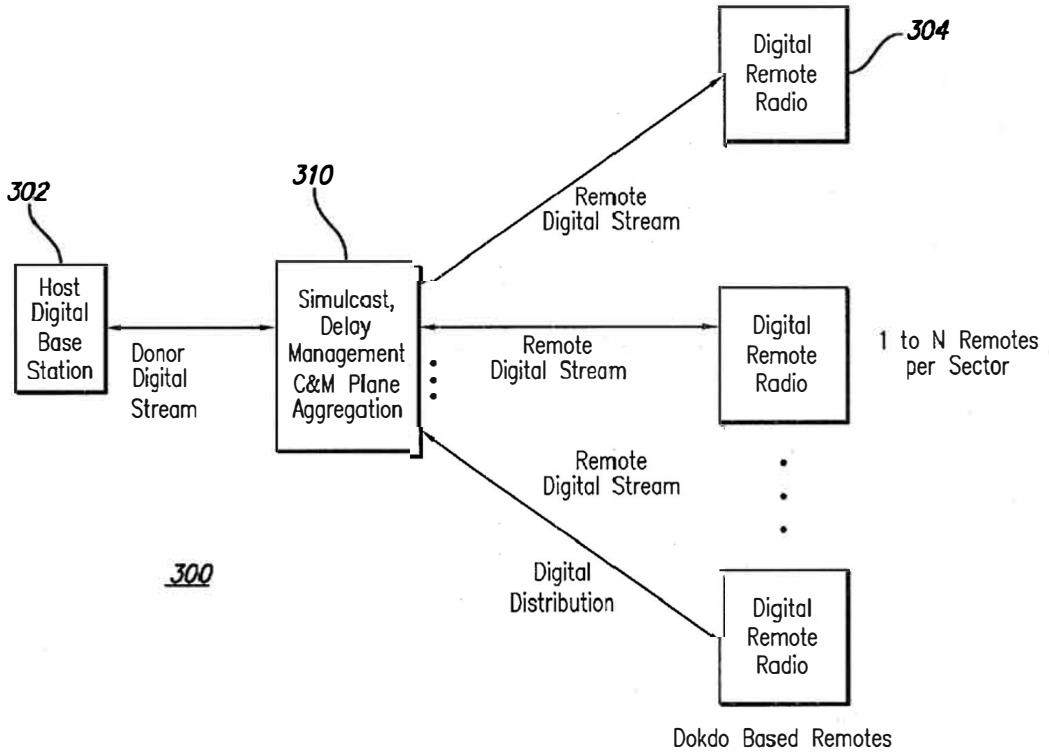

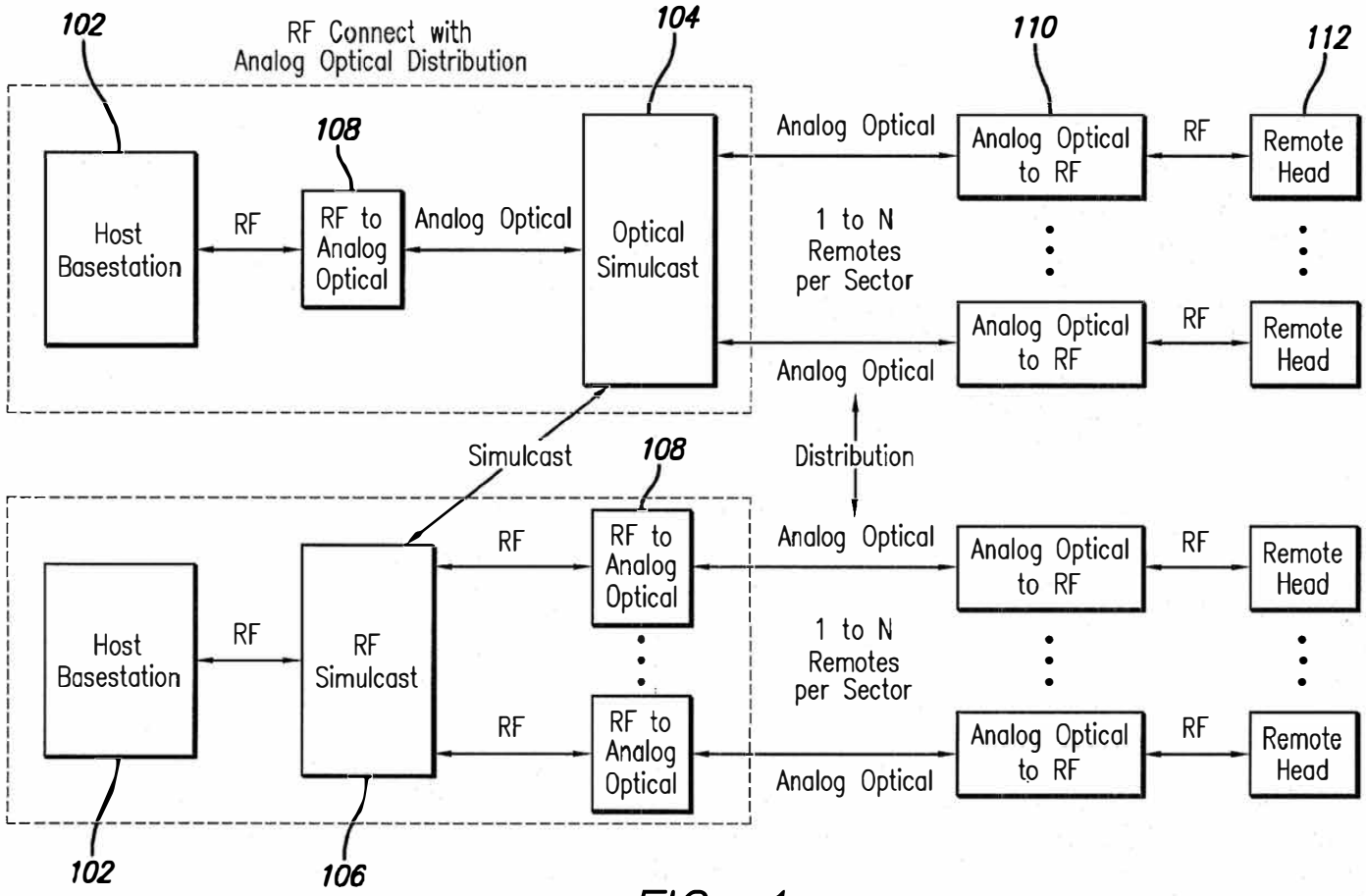

FIG. 1
PRIOR ART

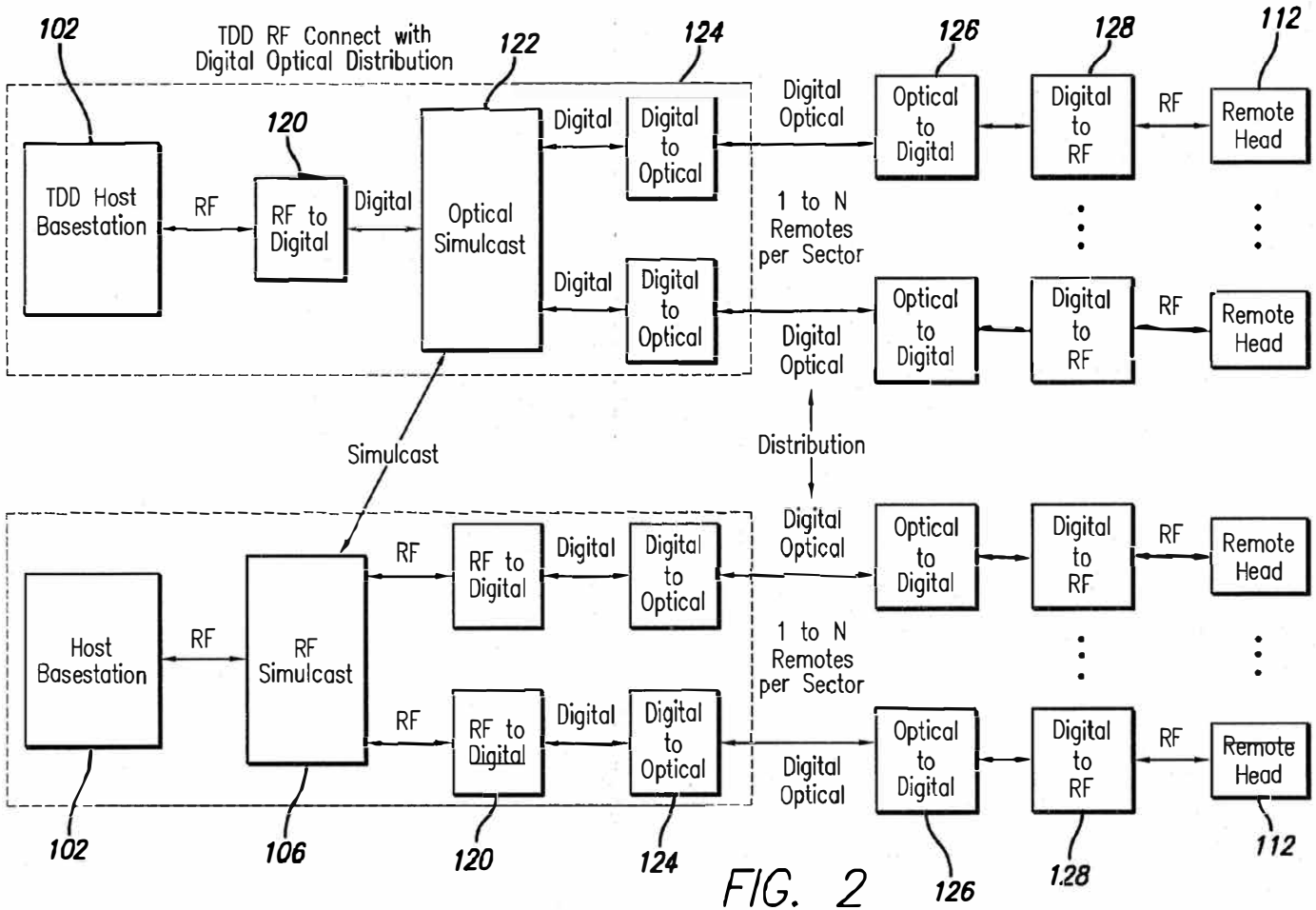

FIG. 2
PRIOR ART

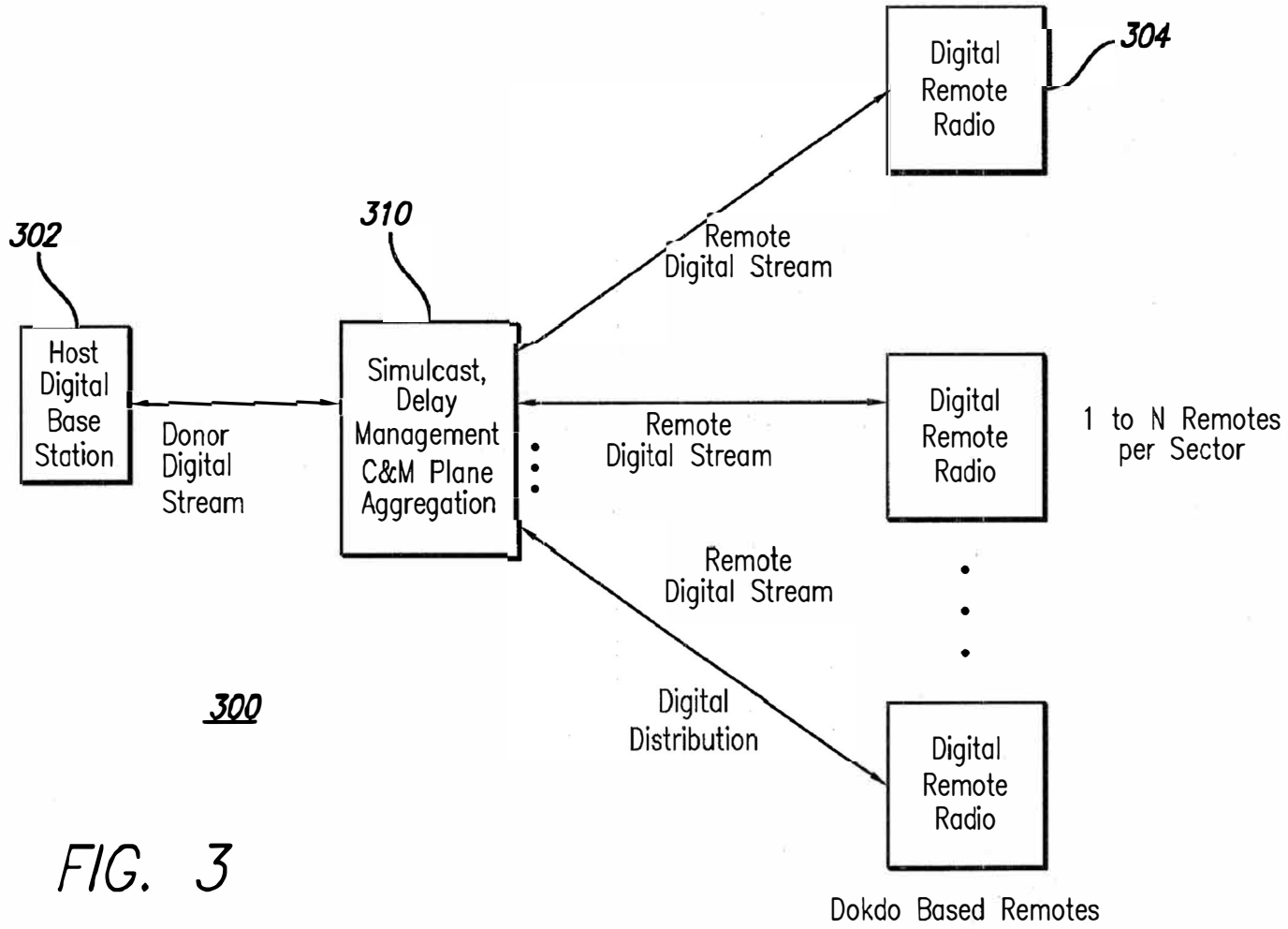
302
Host Digital Base Station
Donor Digital Stream
310
Simulcast, Delay Management C&M Plane Aggregation
Remote Digital Stream
Remote Digital Stream
Remote Digital Stream
Digital Distribution
Digital Remote Radio
304
Digital Remote Radio
Digital Remote Radio
1 to N Remotes per Sector
Dokdo Based Remotes
300

FIG. 3

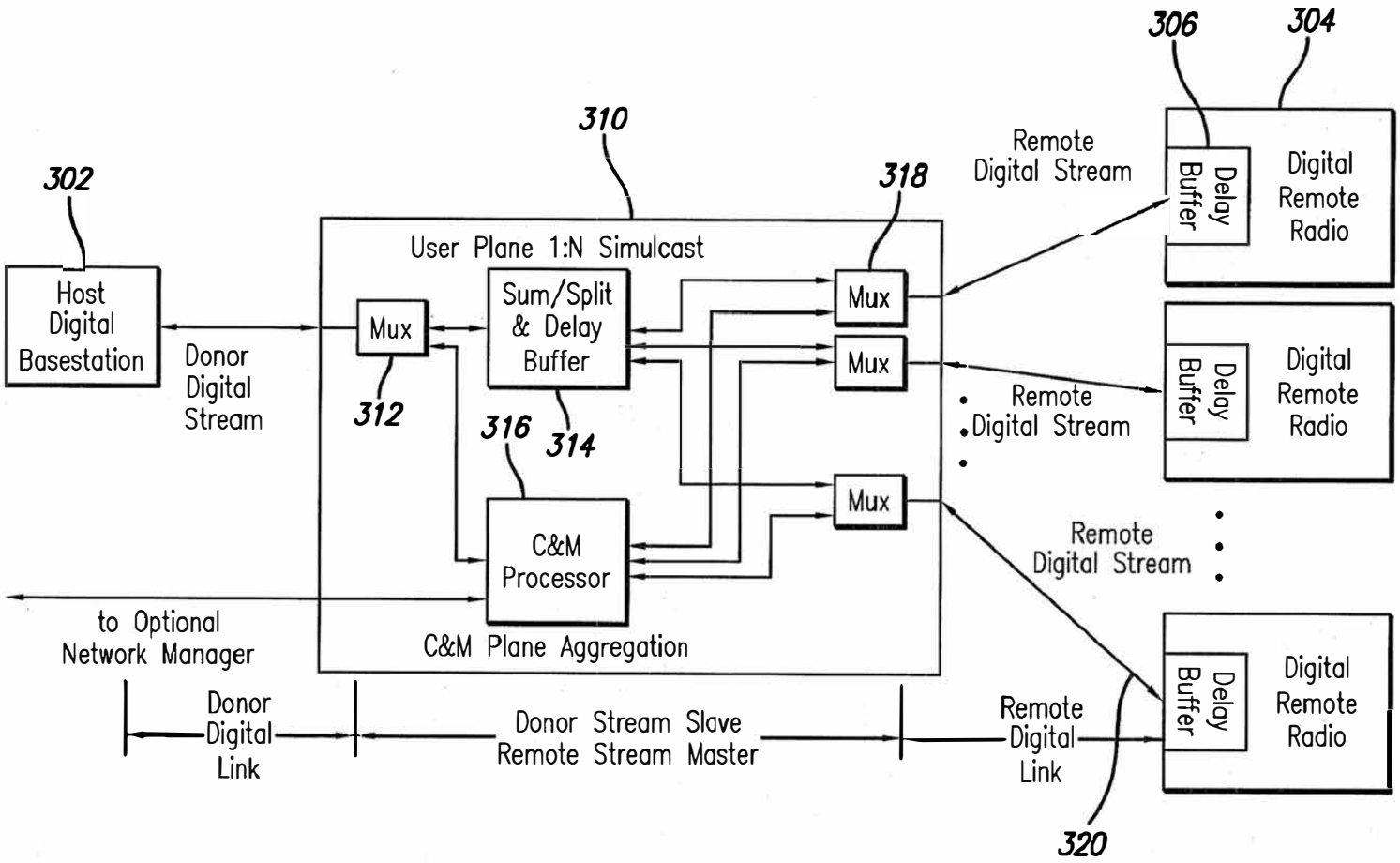
302
Host Digital Basestation
Donor Digital Stream
310
User Plane 1:N Simulcast
Mux
312
Sum/Split & Delay Buffer
314
316
C&M Processor
C&M Plane Aggregation
318
Mux
Mux
Mux
to Optional Network Manager
Donor Digital Link
Donor Stream Slave Remote Stream Master
Remote Digital Stream
Remote Digital Stream
Remote Digital Stream
Remote Digital Link
306
304
Delay Buffer
Digital Remote Radio
Delay Buffer
Digital Remote Radio
Delay Buffer
Digital Remote Radio
320

FIG. 4

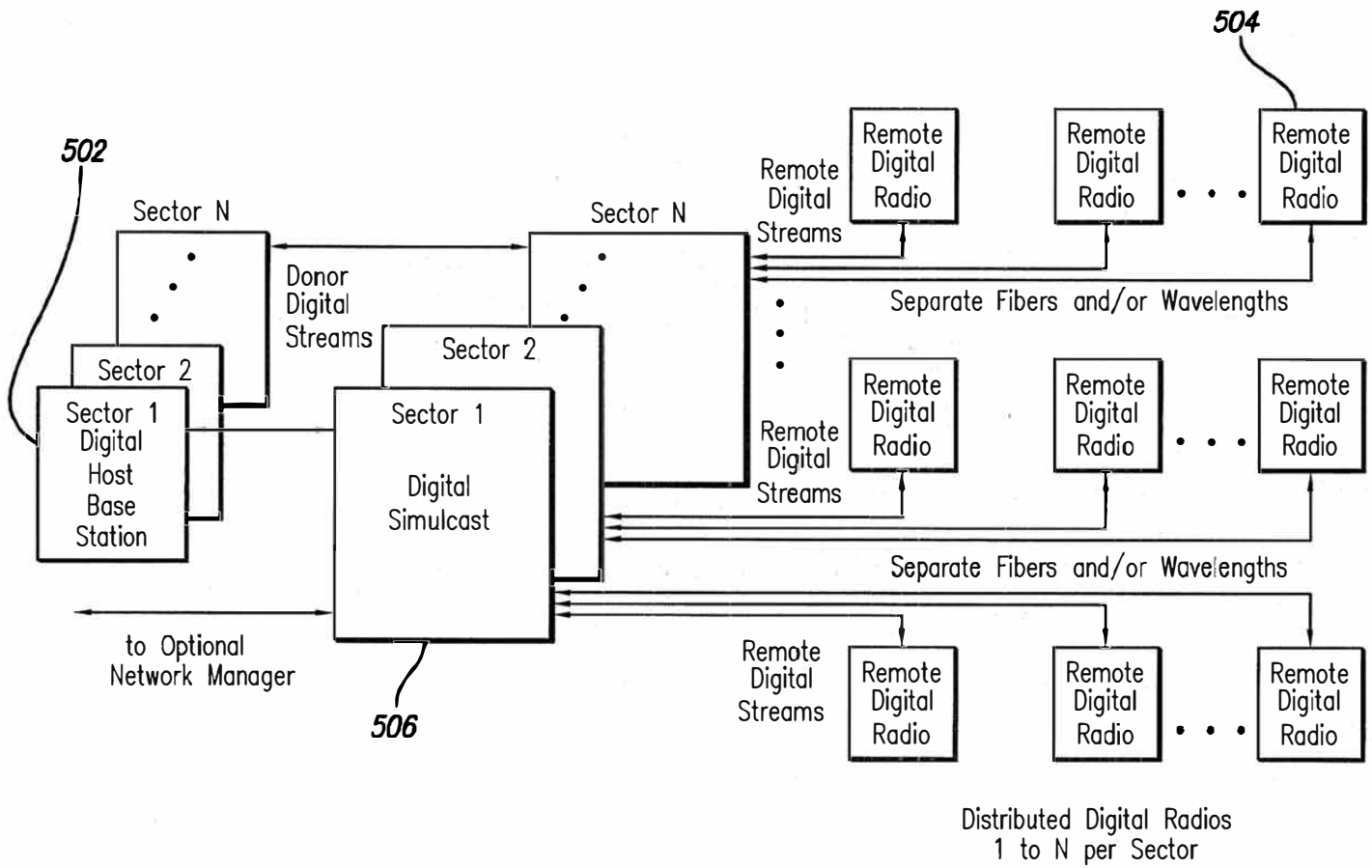
502
504
506
Sector N
Sector 2
Sector 1
Digital
Host
Base
Station
Donor
Digital
Streams
Sector N
Sector 2
Sector 1
Digital
Simulcast
to Optional
Network Manager
Remote
Digital
Streams
Remote
Digital
Radio
Separate Fibers and/or Wavelengths
Remote
Digital
Streams
Remote
Digital
Radio
Separate Fibers and/or Wavelengths
Remote
Digital
Streams
Remote
Digital
Radio
Distributed Digital Radios
1 to N per Sector

FIG. 5

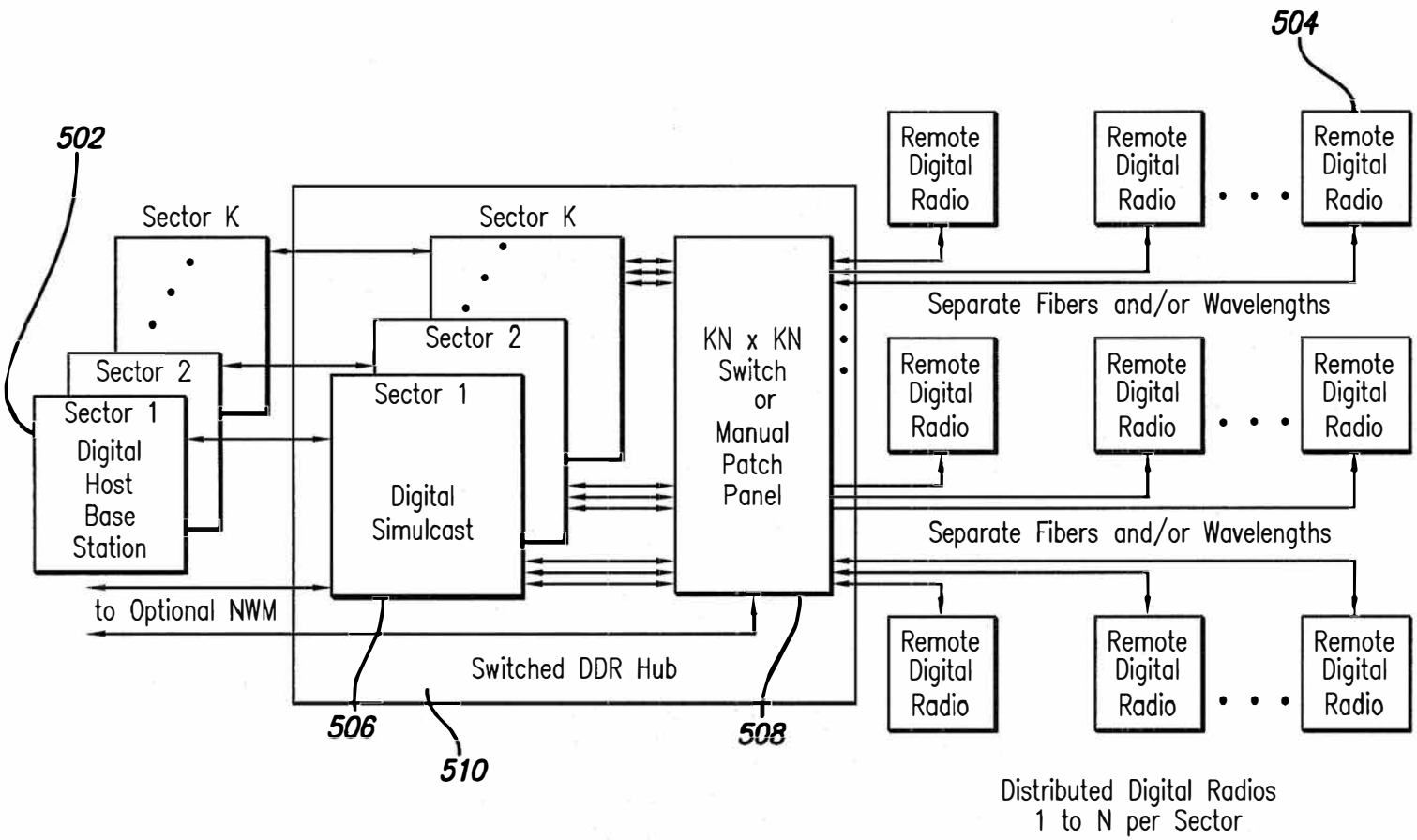
502
504
Sector K
Sector K
Sector 2
Sector 2
Sector 1
Digital
Host
Base
Station
Sector 1
Digital
Simulcast
KN x KN
Switch
or
Manual
Patch
Panel
Remote
Digital
Radio
Separate Fibers and/or Wavelengths
Separate Fibers and/or Wavelengths
to Optional NWM
Switched DDR Hub
506
508
510
Distributed Digital Radios
1 to N per Sector

FIG. 6

DIGITAL DISTRIBUTED ANTENNA SYSTEM

RELATED APPLICATION INFORMATION

[0001] The present application claims the benefit under 35 USC 119(e) of U.S. provisional patent application Ser. No. 61/008,763 filed Dec. 21, 2007, the disclosure of which is incorporated herein by reference in its entirety.

FIELD OF INVENTION

[0002] The present invention relates to wireless communications systems and methods. More specifically, the present invention relates to distributed antenna systems (DAS).

BACKGROUND OF THE INVENTION

[0003] Current wireless communications systems are directed to providing RF coverage and/or call capacity so that users may connect to the wireless infrastructure. All solutions rely on some means of distributing RF energy ranging from high power, large coverage area towers to low power in-building pico-cells.

[0004] There also exists a class of RF enhancement technologies known as RF repeaters. Some are bidirectional RF amplifiers that retransmit the signals received over the air from a host base station. Others are directly connected to a host base station and distribute the RF signals via either electrical, e.g., coaxial cable, or optical fiber distribution networks. In many cases the signals from a base station can be distributed to multiple antenna sites with a means called simulcast.

[0005] More specifically, Distributed Antenna Systems are used to provide wireless communications coverage where it is impractical to install a conventional base station. An example is in-building coverage where low cost radiating antennas are desired and base stations represent either too large or too expensive a solution. Distributed Antenna Systems allow a donor base station to be located outside the desired coverage area and its RF signals are distributed to multiple antennas using either electrical or optical means. A means to distribute the base station's signals to more than one antenna is termed simulcast. In the direction toward the wireless user, i.e., downlink/forward path, the signal is replicated for each remote location. On the return direction, i.e., uplink/reverse path, the signals from multiple remote locations are summed to create a single composite signal for the base station. For both the base station and the user's device, the multiple copies of the RF signal appears as multipath reflections and is compensated for by the use of equalizers and rake receivers.

[0006] In FIG. 1 a block schematic drawing of a Distributed Antenna System (DAS) having direct RF connection to the donor base station with analog optical distribution to the Remote RF Units is shown. Simulcast distribution may be performed either in the RF or optical domains.

[0007] In FIG. 2 a block schematic drawing of a DAS having direct RF connection to the donor base station with digital optical distribution to the Remote RF Units is shown. Simulcast distribution may be performed either in the RF or digital electrical domains.

[0008] As shown in FIGS. 1 and 2, the current DAS solutions use either analog, i.e., 'RF over fiber'/'Analog DAS', links or sampled digital, i.e., 'digital DAS', links and are based on an analog RF connection to the base station. The DAS signals are fed to one or more RF modules, through a technique called simulcast.

[0009] Simulcast is readily accomplished with a base station providing RF inputs and outputs. These techniques are well known to those skilled in the art. Also, for digital distribution, antenna remoting techniques are known to those skilled in the art.

[0010] The diagrams show a single base station sector **102**, i.e. group of RF carriers, connected to multiple Remote RF Units **110**. This is not just a demultiplexing operation where an RF carrier from the host base station is separated for distribution to separate Remote RF Units. All Remote RF Units transmit and receive the same group of RF carriers as the host/donor base station to which they are connected.

[0011] The Remote RF Units are at a different geographical location and they provide either widely separated or partially overlapping coverage areas. For the latter a mobile user's radio may receive identical signals from multiple Remote Units and that composite signal will appear as multipath to that wireless device. As long as the time delay differentials from the overlapping signals are less than the multipath design range of the mobile device, the composite signal will be successfully processed.

[0012] These same multipath and time delay considerations also apply in the reverse direction where a user's device signal is received by multiple remote units. The multiple received signals are summed within the simulcast hardware of the DAS system to provide a single composite signal to the host donor base station **102**. As with the user device (not shown), the base station **102** sets constraints on the amount of time delay differential that can be tolerated on the reverse link.

[0013] For a purely analog distribution network, illustrated in FIG. **1**, the simulcast can be accomplished through RF splitters on the downlink, and RF summers on the uplink. The same splitting and summing can be accomplished in the analog optical domain, with the requirement that different optical wavelengths be used on the uplink. A digital distribution network, illustrated in FIG. **2**, adds the extra steps of Analog-to-Digital and Digital-to-Analog conversions at both ends of the DAS network. As with the analog DAS, a set of RF summers and splitters can perform simulcast prior to conversion to the digital domain. Simulcast can also be implemented in the digital domain prior to conversion to digitally modulated optical signals.

[0014] There is now a new class of base stations with digital input and outputs that are meant to be used in conjunction with remote radio equipment to provide installation flexibility. Although these base stations allow the radio equipment to be remotely located from the base station core electronics, they require a one to one correspondence between each digital airlink stream and a remote radio unit. Detailed specifications of two digital base station interfaces are the Common Public Radio Interface (CPRI) and the Open Base Station Architecture Initiative (OBSAI). With this, a wireless coverage system incorporating a large number of remote antennas will require a large number of base stations along with the attendant issues of frequency re-use and wireless handovers as a user's radio moves throughout a coverage area.

SUMMARY OF THE INVENTION

[0015] In a first embodiment of the present invention, a digital distributed wireless communication system is provided. The wireless communication system includes a base station providing and receiving a digital multiplexed communication signal, a plurality of remote transceiver units, a digi-

tal distributed interface unit coupled to the base station and the plurality of remote transceiver units and providing the digital signal in a 1:N simulcast distribution to, and providing time alignment of the digital multiplexed signals from, the plurality of remote transceiver units.

[0016] A plurality of fiber optic digital interface links corresponding to each of the plurality of remote transceiver units, wherein the fiber optic digital interface links provide the digital multiplexed signal to and from the remote transceiver units. The digital distributed interface unit manages a remote digital interface delay to align a plurality of remote digital multiplexed signals from the plurality of remote transceiver units. Each of the plurality of transceiver remote units includes a programmable delay to equalize propagation time to the digital distributed interface unit.

[0017] The digital distributed wireless communication system further includes a Control & Management (C&M) processor for processing C&M data plane provided to the plurality of remote transceiver units. The digital distributed interface unit provides control commands to each of the plurality of remote transceiver units. The digital multiplexed communication signal is a Common Public Radio Interface (CPRI) signal. The plurality of remote digital transceiver units are Radio (DDR) units providing an airlink to remote users.

[0018] In another aspect of the present invention, a digital distribution communication network, including a host digital base station providing and receiving a digital multiplexed communication signal, a plurality of digital distributed radio (DDR) remotes coupled to receive the digital multiplexed communication signal from the base station, and a DDR Hub configured to provide a 1:N simulcast of the digital multiplexed signal, the DDR Hub coupled to the base station and to each of the plurality of DDR remotes.

[0019] The DDR Hub includes a multiplexer coupled to the host digital base station, a plurality of fiber optic digital interface links coupled to a plurality of multiplexers and to each of the corresponding plurality of DDR remotes, and a user plane processor for implementing summation and splitting operations, and providing a programmable delay for providing a common delay value to the digital multiplexed signals to and from the plurality of DDR remotes.

[0020] The digital distribution communication further includes a Control and Management (C&M) processor for processing C&M data plane from both the host base station and the plurality of DDR remotes and managing the simulcast distribution of the data plane to the plurality of DDRs. The DDR hub manages a remote digital interface delay to align a plurality of remote digital multiplexed signals from the plurality of DDR remotes.

[0021] In still another embodiment of the present invention, a method for providing a digital communication signal between a digital base station and a plurality of remote transceiver units is provided. The method includes providing and receiving a digital multiplexed communication signal at a digital base station via a digital distributed interface unit, and processing the digital multiplexed communication signal for controlled distribution of a 1:N simulcast distribution of the digital multiplexed communication signal to and from a plurality of remote transceiver units, wherein the digital distributed interface unit manages a remote digital interface delay to align a plurality of remote digital multiplexed signals from the plurality of remote transceiver units.

[0022] The method further includes coupling the digital multiplexed signals to a plurality of fiber optic digital interface links corresponding to each of the plurality of remote transceiver units and the digital distributed interface unit for providing the simulcast digital multiplexed signal to the remote unit. Each of the plurality of transceiver remote units includes a programmable delay to equalize propagation time to the digital distributed interface unit. The method still further includes processing Control & Management (C&M) data plane from both the digital base station and the plurality of remote transceiver units, and managing the simulcast distribution of the data plane to the plurality of remote transceiver units. Commanding each individual remote digital transceiver unit via a set of remote CPRI commands transmitted via a corresponding fiber optic digital interface link.

BRIEF DESCRIPTION OF THE DRAWINGS

[0023] FIG. **1** is a block schematic drawing of a Distributed Antenna System (DAS) having direct RF connection to the donor base station with analog optical distribution to the Remote RF Units.

[0024] FIG. **2** is a block schematic drawing of a DAS having direct RF connection to the donor base station with digital optical distribution to the Remote RF Units.

[0025] FIG. **3** is a block schematic drawing of a host digital base station and Digital Distributed Radio with direct digital connection to the donor base station with digital distribution to the Digital Remote Radios according to an embodiment of the present invention.

[0026] FIG. **4** is a block schematic drawing of a host digital base station and Digital Distributed Radio with a detailed diagram of the Digital Distributed Radio Hubs for a single donor base station configuration.

[0027] FIG. **5** is a block schematic drawing of a host digital base station and Digital Distributed Radio with Digital Distributed Hub scaled up in size to support multiple base station sectors according to another embodiment of the present invention.

[0028] FIG. **6** is a block schematic drawing of a host digital base station and Digital Distributed Radio with the addition of a digital switch to a multiple base station sector DDAS to provide capacity reallocation capability to the network.

DETAILED DESCRIPTION OF THE INVENTION

[0029] The invention provides an improved base station system and method of simulcasting a digital multiplexed signal to and from multiple digital radio heads with the necessary synchronization and control aspects to eliminate time delay ambiguities.

[0030] FIG. **3** is a preferred embodiment of the invention illustrating a simple top level diagram of a digital host base station **102** in conjunction with a Distributed Antenna System (DAS) network **300** with simulcast capability.

[0031] As shown, FIG. **3** is a block schematic drawing of a host digital base station and Digital Distributed Radio with direct digital connection to and from the donor base station with digital distribution to the Digital Remote Radios. This has a digital multiplexed communication signal with a timing requirement incompatible with conventional simulcast techniques, as discussed above. For this and subsequent diagrams, a specific digital base station interface (CPRI) will be used as an example for labeling and description purposes. However, this could be an OBSAI base station interface.

[0032] Accordingly, the Common Public Radio Interface (CPRI) detailed specification Versions 1.4, 2.4, 3.0 and 4.0, hereby incorporated by reference, is directed to the digital base station interface between radio equipment control and radio equipment (www.cpri.info/spec.html). Additionally, the Open Base Station Architecture Initiative (OBSAI) standard for base station interface is hereby incorporated by reference (www.obsai.org).

[0033] The base station **302** may be referred to as an REC (Radio Equipment Control). Remote transceiver units **304** will be referred to as the Digital Distributed Radio (DDR) units. The simulcast portion of the network in conjunction with the donor base station is referred to as the DDR Hub **310**. Simulcast distribution is performed digitally along with delay management, and control aggregation in the DDR Hub.

[0034] Again referring to FIG. **3**, the DDR Hub **310** takes Donor CPRI signals from the REC **302** and performs the function of 1:N simulcast on the wireless airlink signal, i.e, the user plane data. The DDR Hub **310** is also responsible for managing the CPRI delay and C&M plane aggregation. Command of each individual DDR **304** is via a set of remote CPRI commands transmitted via a corresponding fiber optic cable **320**.

[0035] In FIG. **4**, a block schematic drawing of a host digital base station and DDR with a detailed diagram of the DDR Hub is shown for a single donor base station configuration of a preferred embodiment of the present invention.

[0036] FIG. **4** provides additional detail for the DDR Hub **310**, showing the user plane and C&M plane processing relationships. The user plane is typically implemented in hardware, e.g., an FPGA (field programmable gate array), as a simple duplication and redistribution on the forward link. On the reverse link, an arithmetic summation is used to combine the signals from all simulcasted remote digital radios **304** to provide a single combined reverse-link signal to the REC **302**. On both the donor CPRI links and remote side CPRI links **320**, the Control and Management (C&M) plane is de-multiplexed/multiplexed for processing in the C&M element processor **316** via multiplexers **312** and **318**. Since the host base station **302** and associated CPRI link have no means for control and maintenance for multiple remote digital radios **304** on the control plane, information from all simulcasted remotes **304** is aggregated into a single entity of the entire simulcast group for presentation to the REC **302**.

[0037] The digital interfaces, i.e., remote side CPRI links **320**, have precise accuracy requirements for the propagation delay to the associated remote digital radio **304**. A simulcast group, will have different propagation delays due to the differing fiber lengths to each of the DDRs **304**. To manage unequal fiber path delays, each DDR **304** incorporates a programmable link delay buffer **306** to equalize propagation time to the DDR Hub **310**. Alternatively, the delay buffers **306** may be located within the DDR Hub **310** instead of within each DDR **304**. These delay buffers **306** are programmed to provide an equal time delay from all remote DDRs **304** to the central DDR Hub **310**.

[0038] The donor side digital interface, e.g., CPRI, from the base station cannot be simply duplicated for all simulcasted digital radios **304**, since it's not designed for this purpose. Therefore, the donor side CPRI interface connection must be terminated at the DDR Hub **310** and multiple remote side digital CPRI connections **320** must be originated for communication with the DDR remote Units **304**. Since the base station **302** uses round trip delay to the remote digital radios **304** to compensate for end-to-end propagation delays, the donor side digital interface in the DDR Hub **310** incorporates a programmable delay buffer in the user plane processor **314** to reflect the common delay value for the digital multiplexed signals from all of the DDR remote units **304**.

[0039] Alternatively, the host base station **302** can be modified from its standard implementation to accept a time measurement message through the C&M plane to reflect the DDR Hub **310** to the DDR remote **304** propagation delay.

[0040] For the C&M plane, the C&M element processor **316** presents a combined view of the DDRs **304** to the REC **302**. The C&M element processor **316** must intervene since the C&M plane from the donor base station **302** is unable to individually address, nor recognize the presence of multiple DDRs **304** in a common simulcast. The donor base station **302** operates in a manner consistent with communication and connection to a single remote radio while the C&M element processor **316** manages all aspects of fanning out the control plane to multiple DDRs **304**.

[0041] Optionally, the C&M element processor **316** can provide a separate IP connection to a separate Network Management System, to provide individual C&M data on each DDR remote unit **304**. This permits a connection, which is independent of the donor base station **302** to be provided to the operator of the installation.

[0042] In addition to the systems described above, more sophisticated embodiments based around multiple Hubs, or switches, allow expansion and reconfiguration of voice/data capacity, as well as, facilitate the addition of additional remote DDRs to the network.

[0043] FIG. **5** is a block schematic drawing illustrating a host digital base station and DDR with DDR Hub scaled up in size to support multiple base station sectors according to another preferred embodiment of the present invention.

[0044] As shown in FIG. **5**, the DDR Hub **506** can be extended to multi-sector support through a simple replication of the single-sector DDR Hub **310** in FIG. **4**. In FIG. **5**, each sector is treated as a separate grouping of remote units with their associated base station sector. In all cases, there is a 1:1 connection from the DDR Hub **506** to the DDRs **504** over either separate fibers or separate wavelengths on a common fiber. The system may be either constructed from multiple copies of one sector DDR Hubs or be a single common, larger capacity DDR Hub. The latter may then share resources, such as the C&M element processor **316** for cost and space savings. In this case, all allocations of remote units **504** to base station sectors **502** are static.

[0045] FIG. **6** is a block schematic drawing of a host digital base station **502** and remote DDR **504** with the addition of a switched DDR Hub **510** to a multiple base station sector DDAS to provide capacity reallocation capability to the network, according to another embodiment of the present invention.

[0046] FIG. **6** shows an expansion of the multi-sector DDR Hub **510** configuration from a static arrangement to a fully switch-capable arrangement. To utilize this switch capability, neither the DDRs **504** nor the DDR Hub **506** needs to change. The switch capability is an applique to the existing DDR hub configuration. By way of example, the switch capability can take two forms. The simplest embodiment is a manual patch panel **508** that allows the operator to reconfigure the connection between the DDRs **504** and the base station **502** as needed to fulfill capacity requirements. Any single DDR **504** can be connected to any base station sector **502** with the only

constraint being the maximum simulcast per sector that is supported by the switched DDR Hub **510**. This allows the operator to set up an initial capacity allocation on best a priori information and later still be able to redistribute capacity should any sector become overloaded.

[0047] Alternatively, the manual patch panel **508** can be replaced with a fully programmable electronic switch. The electronic switch embodiment eliminates the need for the operator to visit the DDR hub **506** to make capacity changes. Through IP connections, connectivity between the DDRs **504** and multiple base stations **502** can be changed remotely. The remote switching capability allows the operator to redistribute capacity in the following manner:

[0048] Manually reassign as needed to deal with long-term capacity changes.

[0049] Timed reassignments based on historical capacity needs on a daily or hourly basis.

[0050] Eventual automatic capacity-driven reassignments to allow the DDRs to adapt to capacity loads dynamically.

[0051] As will be appreciated by those skilled in the art, from the above disclosure the invention provides a number of features and advantages by incorporating simulcast techniques to digital distributed radio equipment. Specifically, in a preferred embodiment it is applied within the digital transport protocol between the base station and the remote radio electronics while resolving any ambiguities that can be generated by having a 1:N relationship between the donor base station interface and that of the remote digital radios. This invention also discloses a method to resolve time delay and control/management issues arising from having multiple remote units connected to each digital RF carrier in the host base station.

[0052] The present invention is distinguished from adding a simulcast DAS at the user side of the remote radio which defeats the benefit of allowing the digital radio to be placed directly within the coverage area. This invention also differs from demultiplexing multiple airlinks from a composite digital interface and sending individual airlinks to only one remote unit. Unlike simulcast, demultiplexing does not reduce handoff, frequency reuse, or PN offset reuse considerations.

[0053] The foregoing description of preferred embodiments is presented for purposes of illustration and description. Furthermore, the description is not intended to limit the invention to the form disclosed herein. Accordingly, variants and modifications consistent with the following teachings, and skill and knowledge of the relevant art, are within the scope of the present invention. The embodiments described herein are further intended to explain modes known for practicing the invention disclosed herewith and to enable others skilled in the art to utilize the invention in equivalent, or alternative embodiments and with various modifications considered necessary by the particular application(s) or use(s) of the present invention.

What is claimed is:

1. A digital distributed wireless communication system, comprising:

a base station providing and receiving a digital multiplexed communication signal;

a plurality of remote transceiver units;

a digital distributed interface unit coupled to the base station and the plurality of remote transceiver units and providing the digital signal in a 1:N simulcast distribution to, and providing time alignment of the digital multiplexed signals from, the plurality of remote transceiver units.

2. The digital distributed wireless communication system of claim **1**, further comprising:

a plurality of fiber optic digital interface links corresponding to each of the plurality of remote transceiver units, wherein the fiber optic digital interface links provide the digital multiplexed signal to and from the remote transceiver units.

3. The digital distributed wireless communication system of claim **1**, wherein the digital distributed interface unit manages a remote digital interface delay to align a plurality of remote digital multiplexed signals from the plurality of remote transceiver units.

4. The digital distributed wireless communication system of claim **1**, wherein each of the plurality of transceiver remote units comprises a programmable delay to equalize propagation time to the digital distributed interface unit.

5. The digital distributed wireless communication system of claim **1**, wherein the DDR Hub responds to the timing measurements of the donor base station interface with a value that equals the common propagation delay from the base station through the DDR Hub to the remote unit(s).

6. The digital distributed wireless communication system of claim **1**, further comprising:

a Control & Management (C&M) processor for processing C&M data plane provided to the plurality of remote transceiver units.

7. The digital distributed wireless communication system of claim **1**, wherein the digital distributed interface unit provides control commands to each of the plurality of remote transceiver units.

8. The digital distributed wireless communication system of claim **1**, wherein the digital multiplexed communication signal is a Common Public Radio Interface (CPRI) Open Basestation Architecture initiative (OBSAI) signal.

9. The digital distributed wireless communication system of claim **1**, wherein the plurality of remote digital transceiver units are Digital Distributed Radio (DDR) units providing an airlink to remote users.

10. A digital distribution communication network, comprising:

a host digital base station providing and receiving a digital multiplexed communication signal;

a plurality of digital distributed radio (DDR) remotes coupled to receive the digital multiplexed communication signal from the base station; and

a DDR Hub configured to provide a 1:N simulcast of the digital multiplexed signal, the DDR Hub coupled to the base station and to each of the plurality of DDR remotes, wherein the DDR Hub comprises:

a multiplexer coupled to the host digital base station;

a plurality of fiber optic digital interface links coupled to a plurality of multiplexers and to each of the corresponding plurality of DDR remotes; and

a user plane processor for implementing summation and splitting operations, and providing a programmable delay for providing a common delay value to the digital multiplexed signals to and from the plurality of DDR remotes.

11. The digital distribution communication network of claim **10**, further comprising:

a Control and Management (C&M) processor for processing C&M data plane from both the host base station and the plurality of DDR remotes and managing the simulcast distribution of the data plane to the plurality of DDRs.

12. The digital distribution communication network of claim **10**, wherein the DDR hub manages a remote digital interface delay to align a plurality of remote digital multiplexed signals from the plurality of DDR remotes.

13. The digital distribution communication network of claim **10**, wherein each of the plurality of DDR remotes comprises a programmable delay for equalizing all of the plurality of DDR propagation times to the DDR Hub.

14. The digital distribution communication network of claim **10**, wherein the digital multiplexed signal is a Common Public Radio Interface (CPRI) signal.

15. A method for providing a digital communication signal between a digital base station and a plurality of remote transceiver units, the method comprising:

providing and receiving a digital multiplexed communication signal at a digital base station via a digital distributed interface unit; and

processing the digital multiplexed communication signal for controlled distribution of a 1:N simulcast distribution of the digital multiplexed communication signal to and from a plurality of remote transceiver units,

wherein the digital distributed interface unit manages a remote digital interface delay to align a plurality of remote digital multiplexed signals from the plurality of remote transceiver units.

16. The method of claim **15**, further comprising:

coupling the digital multiplexed signals to a plurality of fiber optic digital interface links corresponding to each of the plurality of remote transceiver units and the digital distributed interface unit for providing the simulcast digital multiplexed signal to the remote unit.

17. The method of claim **15**, wherein each of the plurality of transceiver remote units comprises a programmable delay to equalize propagation time to the digital distributed interface unit.

18. The of claim **15**, wherein the DDR Hub responds to the timing measurements of the donor base station interface with a value that equals the common propagation delay from the base station through the DDR Hub to the remote unit(s).

19. The method of claim **15**, further comprising:

processing Control & Management (C&M) data plane from both the digital base station and the plurality of remote transceiver units; and

managing the simulcast distribution of the data plane to the plurality of remote transceiver units.

20. The method of claim **15**, wherein the digital multiplexed signal is a Common Public Radio Interface (CPRI) or Open Basestation Architecture Initiative (OBSAI) signal.

21. The method of claim **15**, wherein the plurality of remote digital transceiver units provide airlink transmission to and from remote users.

22. The method of claim **15**, further comprising commanding each individual remote digital transceiver unit via a set of remote CPRI or OBSAI commands transmitted via a corresponding fiber optic digital interface link.

* * * * *