US 20010044817A1

(19) United States

(12) Patent Application Publication (10) Pub. No.: US 2001/0044817 A1

Asano et al. (43) Pub. Date: Nov. 22, 2001

(54) COMPUTER SYSTEM AND A METHOD FOR CONTROLLING A COMPUTER SYSTEM

(76) Inventors: **Masayasu Asano**, Yokohama (JP); **Toshiaki Arai**, Machida (JP); **Hirofumi Yamashita**, Yokohama (JP)

Correspondence Address:
Mattingly, Stanger & Malur, P.C.
104 East Hume Avenue
Alexandria, VA 22301 (US)

(21) Appl. No.: **09/756,282**

(22) Filed: **Jan. 9, 2001**

(30) **Foreign Application Priority Data**

May 18, 2000 (JP) 2000-146867

Publication Classification

(51) **Int. Cl.**[7] **G06F 9/00**

(52) **U.S. Cl.** **709/100**

(57) **ABSTRACT**

In a cluster system including a plurality of operating systems operating on one computer, computer resources can be updated for and reallocated to each operating system. When the operating systems are used as active or standby operating systems, a multiple operating system management controller monitors the state of each operating system. At a failure of an active operating system, the controller allocates a larger part of computer resources to another operating system in a normal state and assigns the operating system as a new active operating system. Regardless of the failure, the computer system can be operated without changing processing capability thereof. The controller can monitor load of each operating system to allocate computer resources to the operating system according to the load.

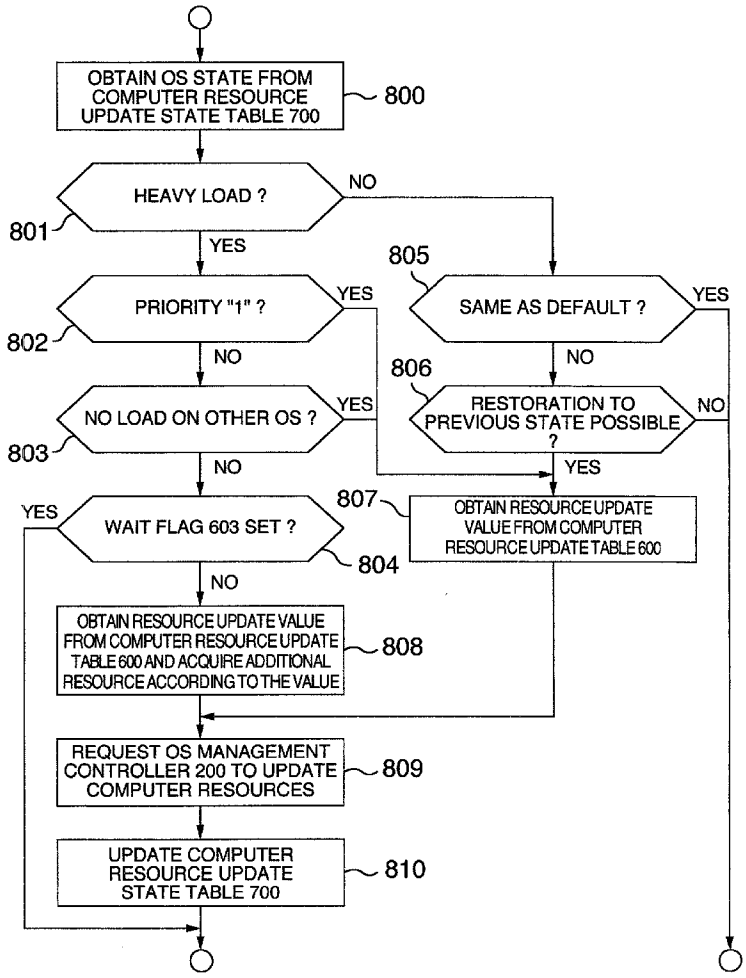

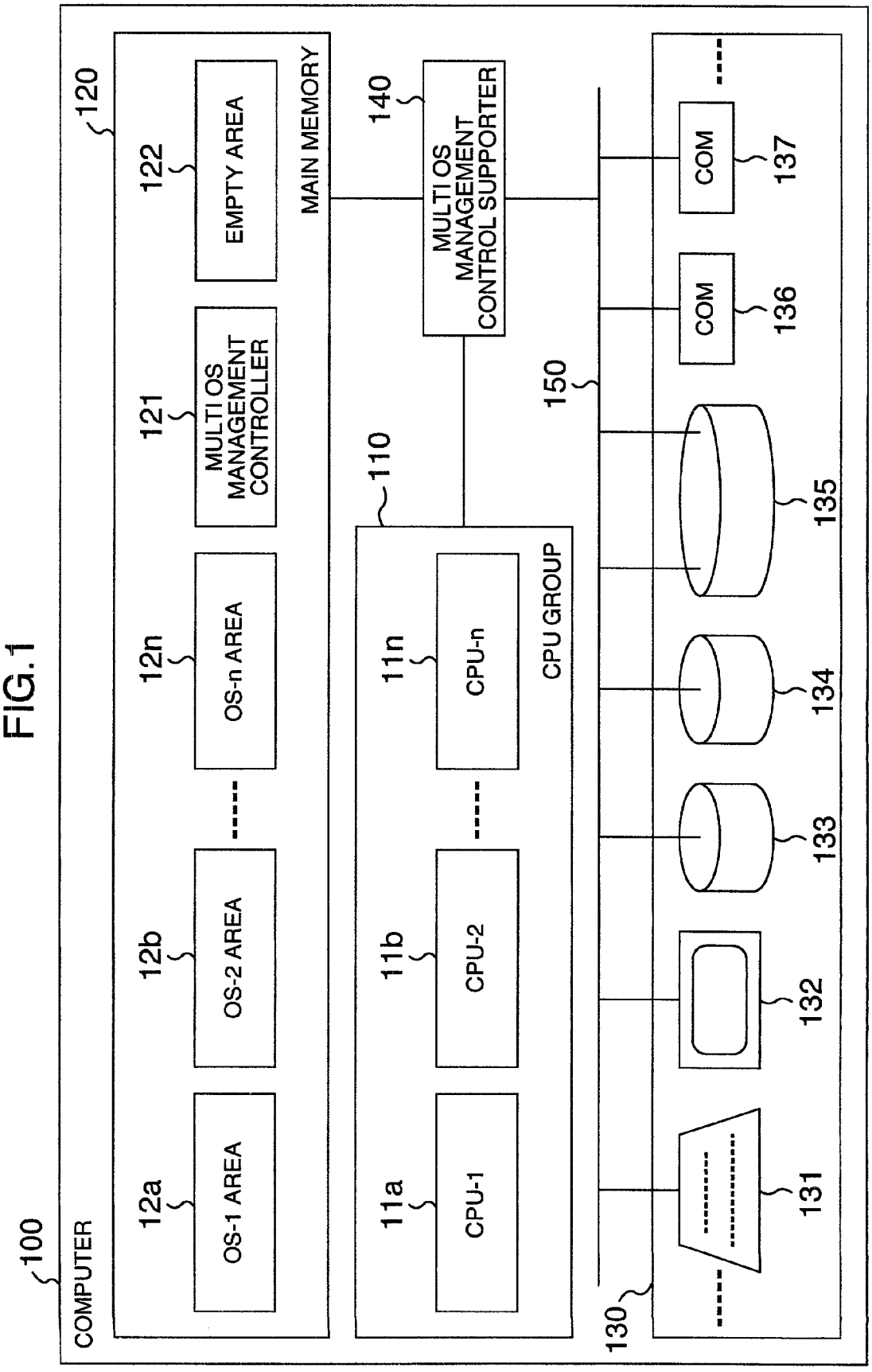
100
COMPUTER
120
MAIN MEMORY
12a
OS-1 AREA
12b
OS-2 AREA
12n
OS-n AREA
121
MULTI OS MANAGEMENT CONTROLLER
122
EMPTY AREA
140
MULTI OS MANAGEMENT CONTROL SUPPORTER
110
CPU GROUP
11a
CPU-1
11b
CPU-2
11n
CPU-n
150
130
131
132
133
134
135
136
COM
137
COM

FIG. 1

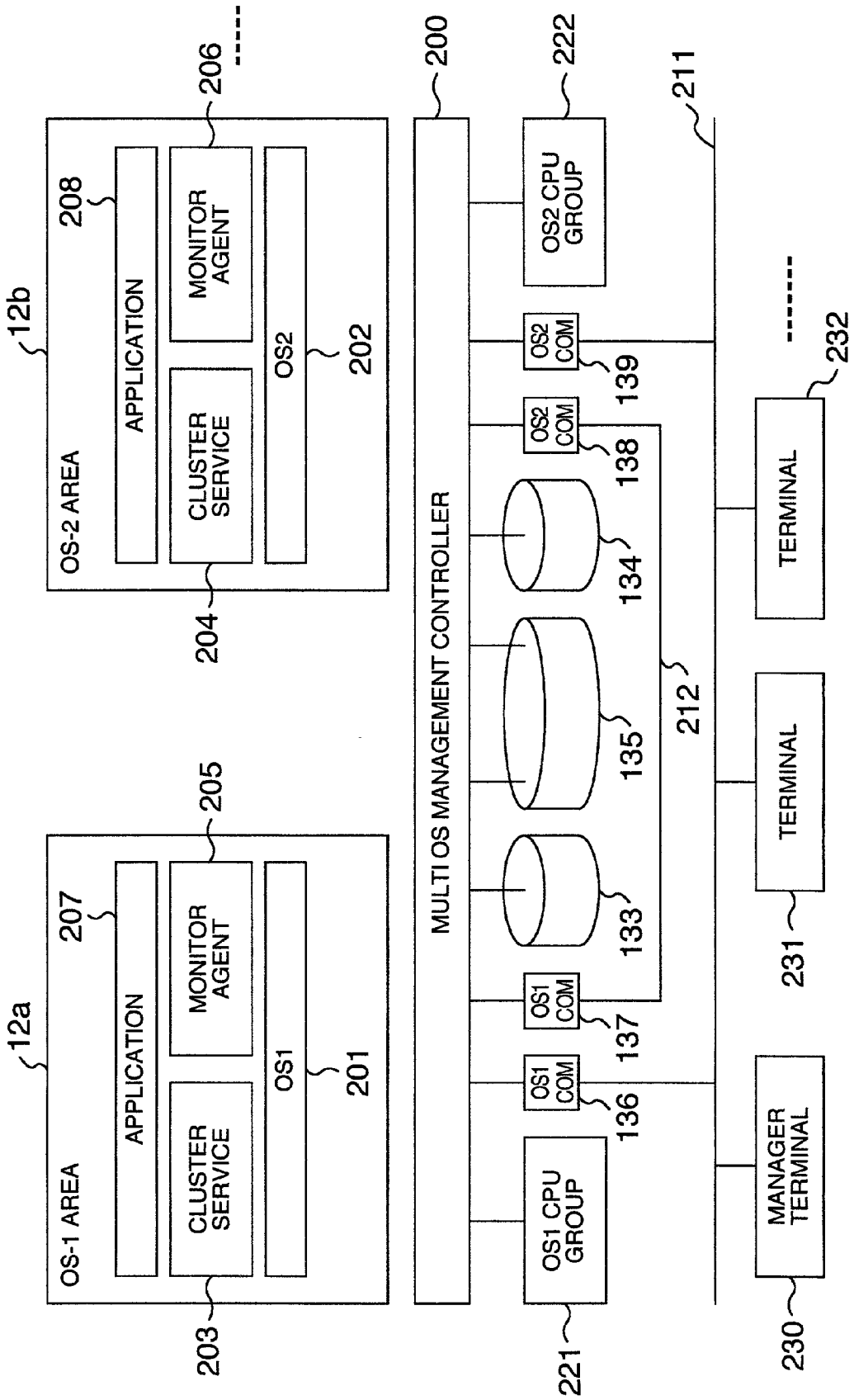
12b
OS-2 AREA
208
APPLICATION
206
MONITOR AGENT
CLUSTER SERVICE
OS2
202
204
12a
OS-1 AREA
207
APPLICATION
205
MONITOR AGENT
CLUSTER SERVICE
OS1
201
203
200
MULTI OS MANAGEMENT CONTROLLER
222
OS2 CPU GROUP
OS2 COM
139
OS2 COM
138
134
135
133
212
OS1 COM
137
OS1 COM
136
OS1 CPU GROUP
221
211
TERMINAL
232
TERMINAL
231
MANAGER TERMINAL
230

FIG.2

FIG.3

300 COMPUTER STATE TABLE

310 COMPUTER RESOURCE ALLOCATION TABLE

311 COMPUTER RESOURCE NAME	312 ACTIVE COMPUTER RESOURCE SERVICE RATIO	313 STANDBY COMPUTER RESOURCE SERVICE RATIO
CPU	95%	5%
MAIN MEMORY		

320 OS STATE TABLE

321 OS NAME	322 STATE	323 ACTIVE,STANDBY	324 CPU
OS 1	OPERATING	ACTIVE	95%
OS 2	OPERATING	STANDBY	5%

FIG.4

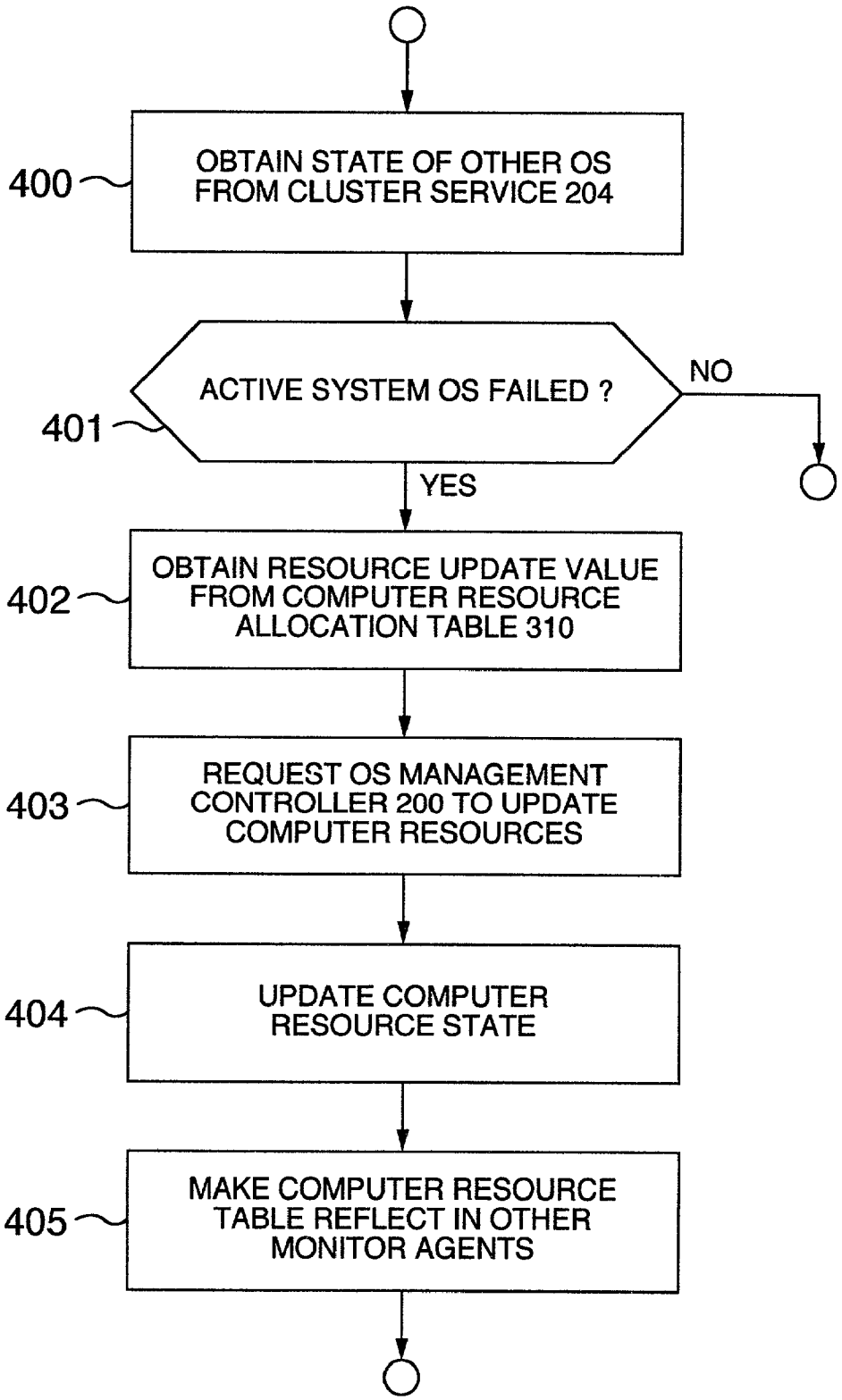
400
OBTAIN STATE OF OTHER OS FROM CLUSTER SERVICE 204
401
ACTIVE SYSTEM OS FAILED ?
NO
YES
402
OBTAIN RESOURCE UPDATE VALUE FROM COMPUTER RESOURCE ALLOCATION TABLE 310
403
REQUEST OS MANAGEMENT CONTROLLER 200 TO UPDATE COMPUTER RESOURCES
404
UPDATE COMPUTER RESOURCE STATE
405
MAKE COMPUTER RESOURCE TABLE REFLECT IN OTHER MONITOR AGENTS

FIG.5

500 COMPUTER RESOURCE CONFIGURATION AREA

510 CPU USE TABLE

511 ITEM	512 VALUE
No. OF CPUS IN USE	
No. OF CPUS NOT IN USE	

520 MAIN MEMORY USE TABLE

521 ITEM	522 VALUE
No. OF MEMORIES IN USE	
No. OF MEMORIES NOT IN USE	

530 EXTERNAL DEVICE USE TABLE

531 ITEM	532 IN USE/ NOT IN USE
I/O 1	I/O 1
I/O 2	I/O 2
I/O n	I/O n

540 PHYSICAL CPU CONFIGURATION TABLE

541 ID	542 PRIORITY	543 INITIAL NUMBER	544 CURRENT NUMBER
1	1	2	2
2	2	1	1

550 OS CONFIGURATION TABLE

551 OS NAME	552 PRIORITY	553 TYPE	554 ID	555 CPU	556 MAIN MEMORY	557 I/O 1	558 I/O 2
OS 1							
OS 2							
OS n							

FIG.6

COMPUTER RESOURCE UPDATE TABLE 600

OS NAME 601	ID 602	WAIT FLAG 603	COMPUTER RESOURCE UPDATE CONDITION 604			COMPUTER RESOURCE UPDATE CONFIGURATION 605		
			CPU 606	MAIN MEMORY 607	I/O 608	CPU 609	MAIN MEMORY 610	I/O 611
OS1								
OS2								
Osn								
ALL OS								

FIG.7

COMPUTER RESOURCE UPDATE STATE TABLE 700

OS NAME 701	CPU 702	CPU LOAD 703	MAIN MEMORY 704	MAIN MEMORY LOAD 705	I/O 706	I/O LOAD 707	I/O 2 708	I/O 2 LOAD 709
OS1								
OS2								
Osn								

FIG.8

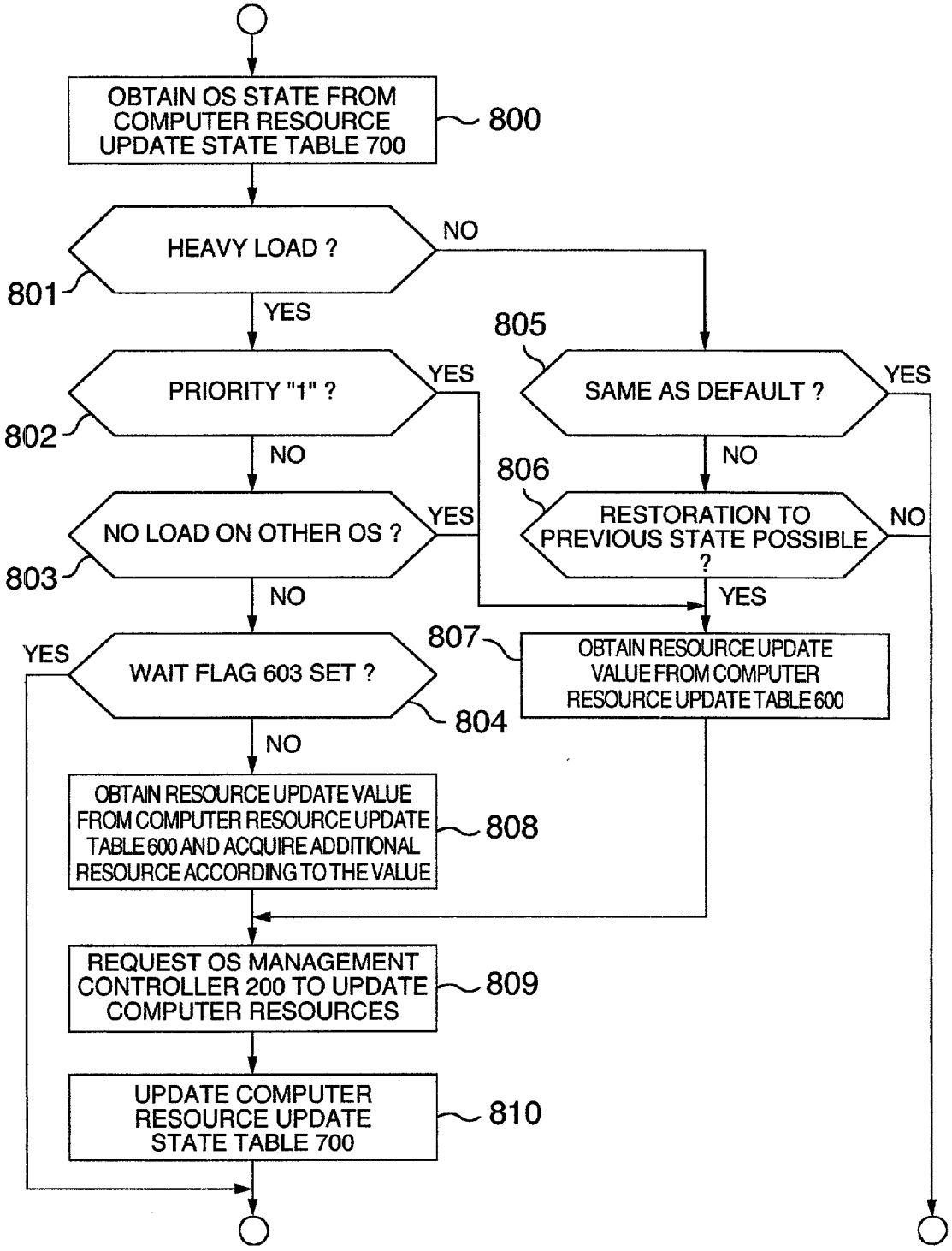
OBTAIN OS STATE FROM COMPUTER RESOURCE UPDATE STATE TABLE 700
800
HEAVY LOAD ?
801
NO
YES
PRIORITY "1" ?
802
YES
NO
NO LOAD ON OTHER OS ?
803
YES
NO
WAIT FLAG 603 SET ?
804
YES
NO
OBTAIN RESOURCE UPDATE VALUE FROM COMPUTER RESOURCE UPDATE TABLE 600 AND ACQUIRE ADDITIONAL RESOURCE ACCORDING TO THE VALUE
808
REQUEST OS MANAGEMENT CONTROLLER 200 TO UPDATE COMPUTER RESOURCES
809
UPDATE COMPUTER RESOURCE UPDATE STATE TABLE 700
810
805
SAME AS DEFAULT ?
YES
NO
806
RESTORATION TO PREVIOUS STATE POSSIBLE ?
NO
YES
807
OBTAIN RESOURCE UPDATE VALUE FROM COMPUTER RESOURCE UPDATE TABLE 600

FIG.9

COMPUTER RESOURCE UPDATE TABLE 2

900

JOB NAME (901)	OS NAME (902)	JOB START TIME (903)	JOB END TIME (904)	WAIT FLAG (905)	COMPUTER RESOURCE REQUEST VALUE (906)		
					CPU (907)	MAIN MEMORY (908)	I/O (909)
1							
2							
n							

FIG.10

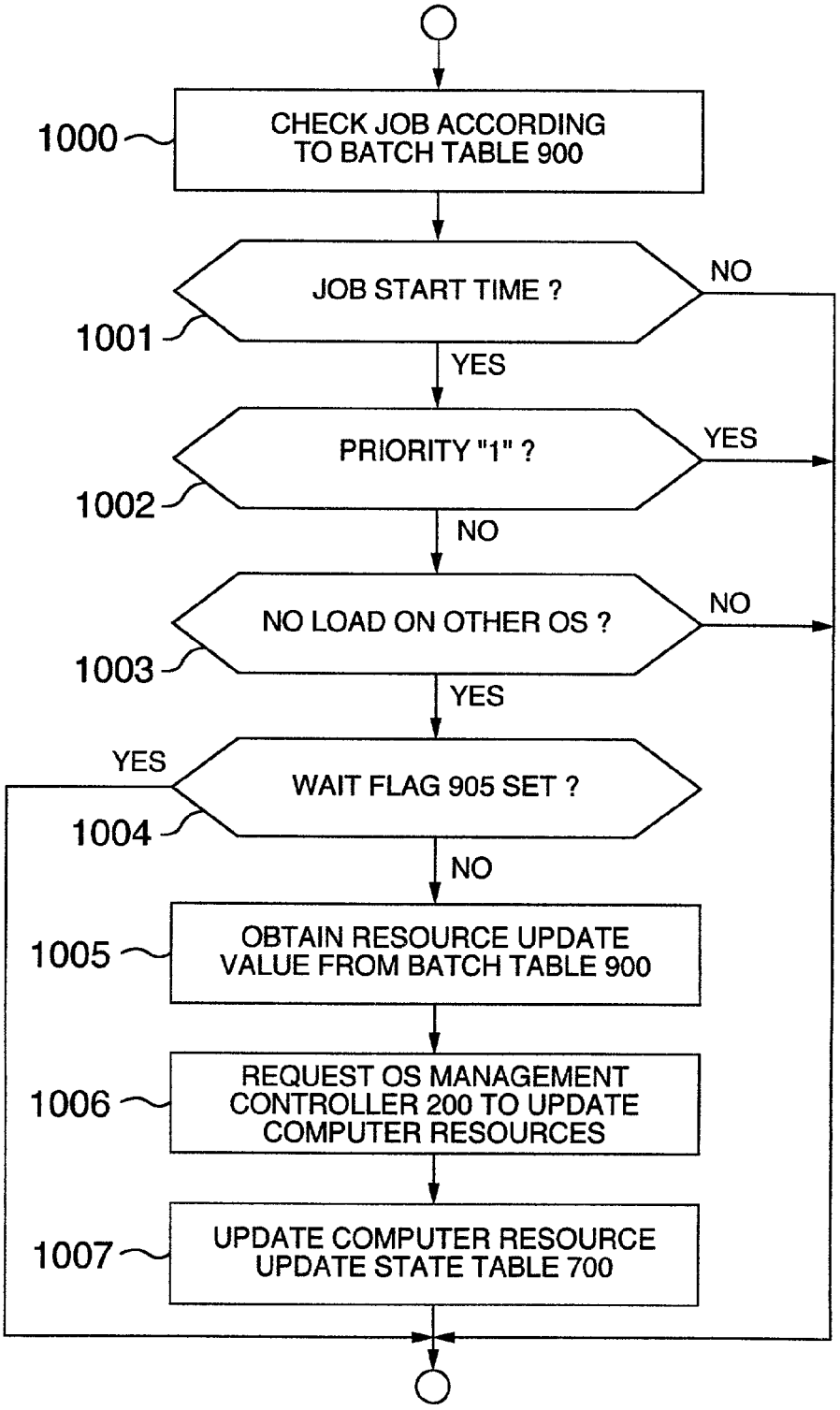
1000
CHECK JOB ACCORDING TO BATCH TABLE 900
1001
JOB START TIME ?
NO
YES
1002
PRIORITY "1" ?
YES
NO
1003
NO LOAD ON OTHER OS ?
NO
YES
1004
WAIT FLAG 905 SET ?
YES
NO
1005
OBTAIN RESOURCE UPDATE VALUE FROM BATCH TABLE 900
1006
REQUEST OS MANAGEMENT CONTROLLER 200 TO UPDATE COMPUTER RESOURCES
1007
UPDATE COMPUTER RESOURCE UPDATE STATE TABLE 700

FIG.11

1100 USER CONFIGURATION TABLE

1110 USER ACCOUNT TABLE

USER ID (1111)	TIME CHARGED (1112)	1 CPU (1113)	2 CPU (1114)	100M MAIN MEMORY (1115)	200M MAIN MEMORY (1116)	I/O 1 (1117)	I/O 2 (1118)	CHARGE (1119)
1		○		○		○	○	
2		○	○	○	○	○	○	
n								

1120 USER REGISTER TABLE

USER ID (1121)	START TIME (1122)	END TIME (1123)	CPU (1124)	MAIN MEMORY (1125)	I/O (1126)	STANDARD CHARGE (1127)
1	○	○	1	100	○	
2	8	20	2	200	○	
n						

FIG.12

1200 COMPUTER RESOURCE ACCOUNT STANDARD AREA

1210 CPU ACCOUNT STANDARD TABLE

1220	1221	1222		122n
TIME	1 CPU	2 CPU		N CPU
1				
2				

1230 MAIN MEMORY ACCOUNT STANDARD TABLE

1240	1241	1242		124n
TIME	100MB	200MB		N MB
1				
2				

1250 EXTERNAL DEVICE ACCOUNT STANDARD TABLE

1260	1261	1262		126n
TIME	1G	2G		NG
1				
2				

FIG.13

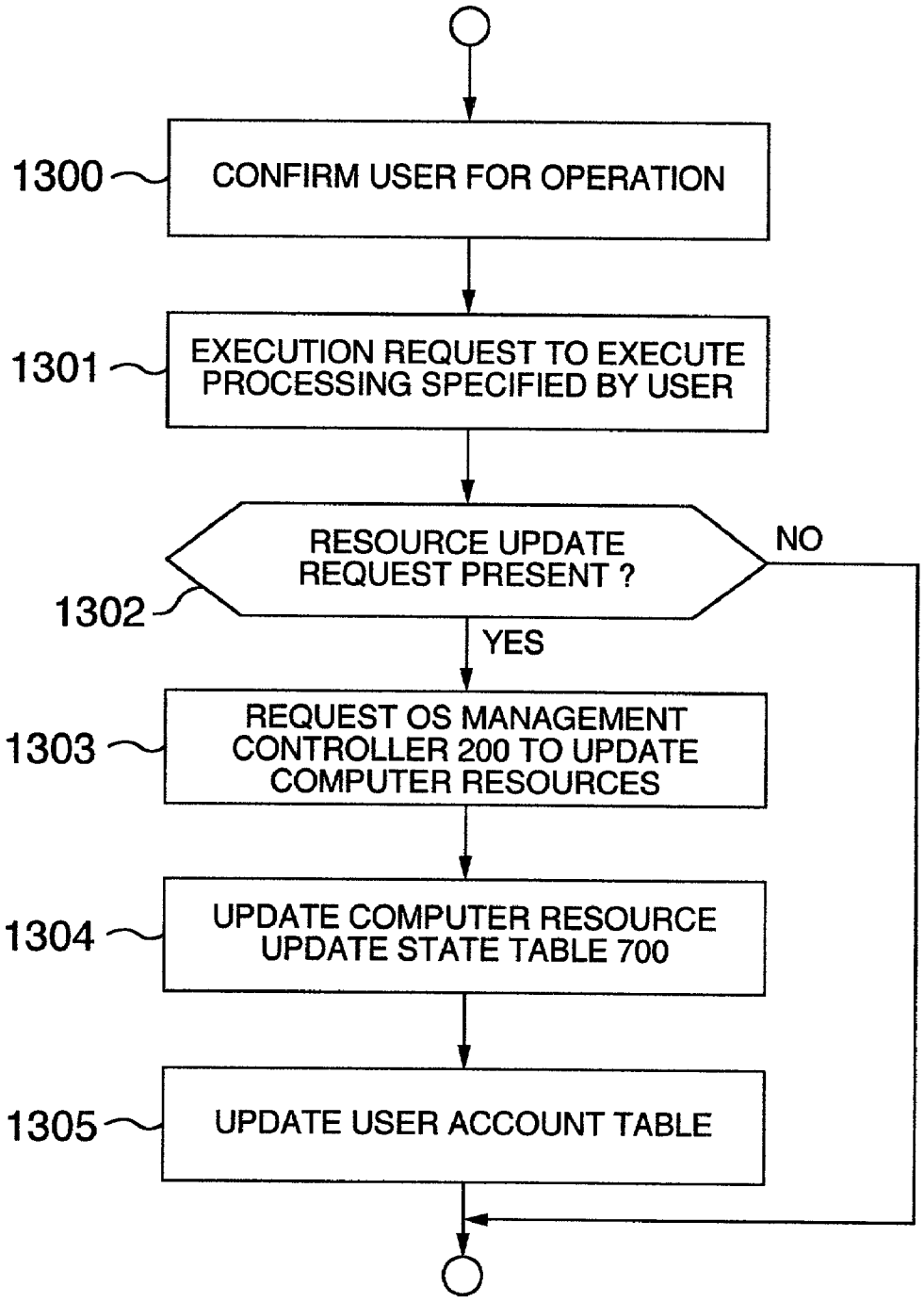
1300
CONFIRM USER FOR OPERATION
1301
EXECUTION REQUEST TO EXECUTE PROCESSING SPECIFIED BY USER
1302
RESOURCE UPDATE REQUEST PRESENT ?
NO
YES
1303
REQUEST OS MANAGEMENT CONTROLLER 200 TO UPDATE COMPUTER RESOURCES
1304
UPDATE COMPUTER RESOURCE UPDATE STATE TABLE 700
1305
UPDATE USER ACCOUNT TABLE

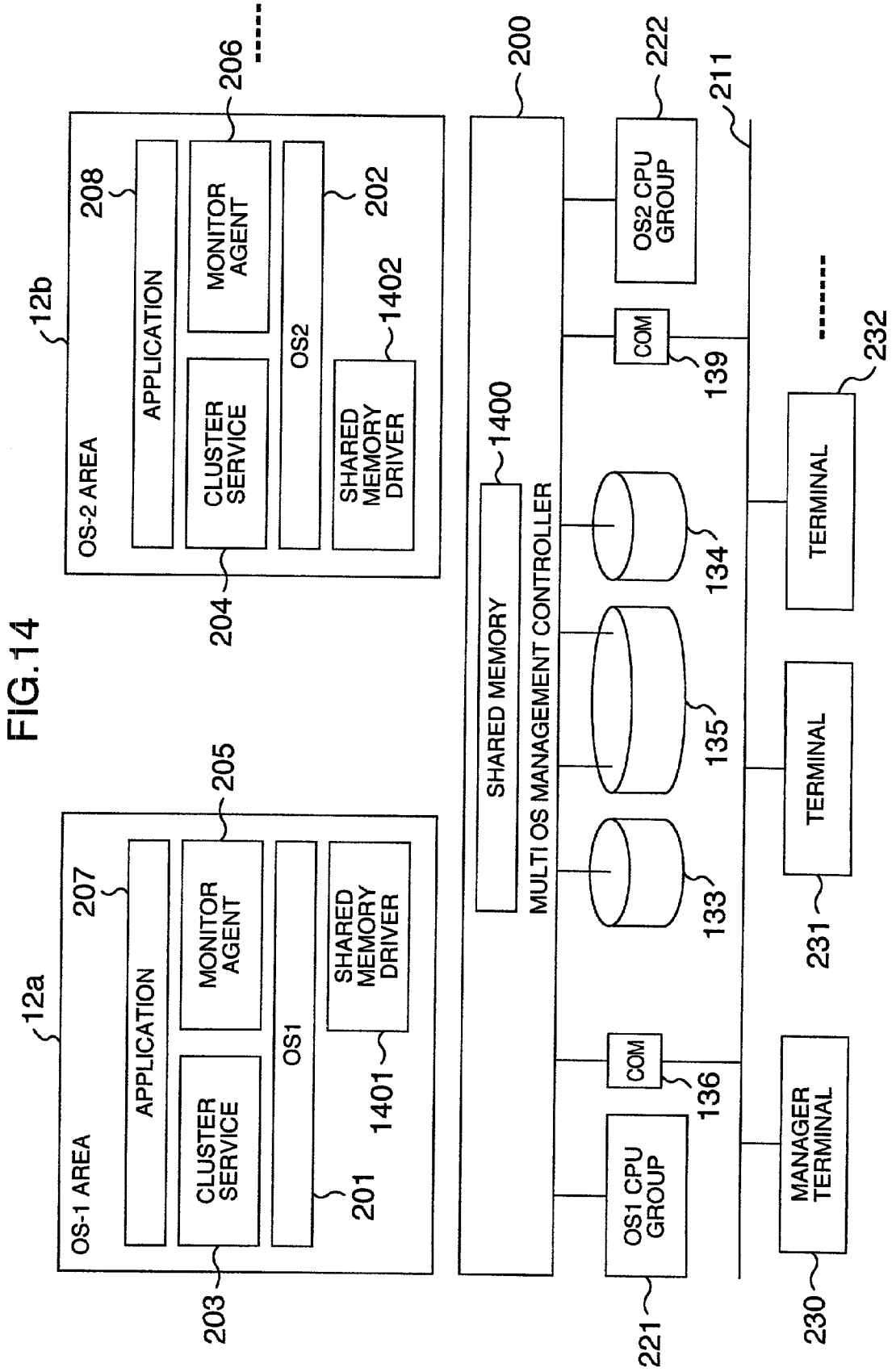
12b
OS-2 AREA
208
APPLICATION
206
MONITOR AGENT
CLUSTER SERVICE
OS2
202
1402
SHARED MEMORY DRIVER
204
12a
OS-1 AREA
207
APPLICATION
205
MONITOR AGENT
CLUSTER SERVICE
OS1
1401
SHARED MEMORY DRIVER
201
203
200
SHARED MEMORY
1400
MULTI OS MANAGEMENT CONTROLLER
OS2 CPU GROUP
222
COM
139
134
135
133
COM
136
OS1 CPU GROUP
221
211
TERMINAL
232
TERMINAL
231
MANAGER TERMINAL
230

FIG.14

FIG.15

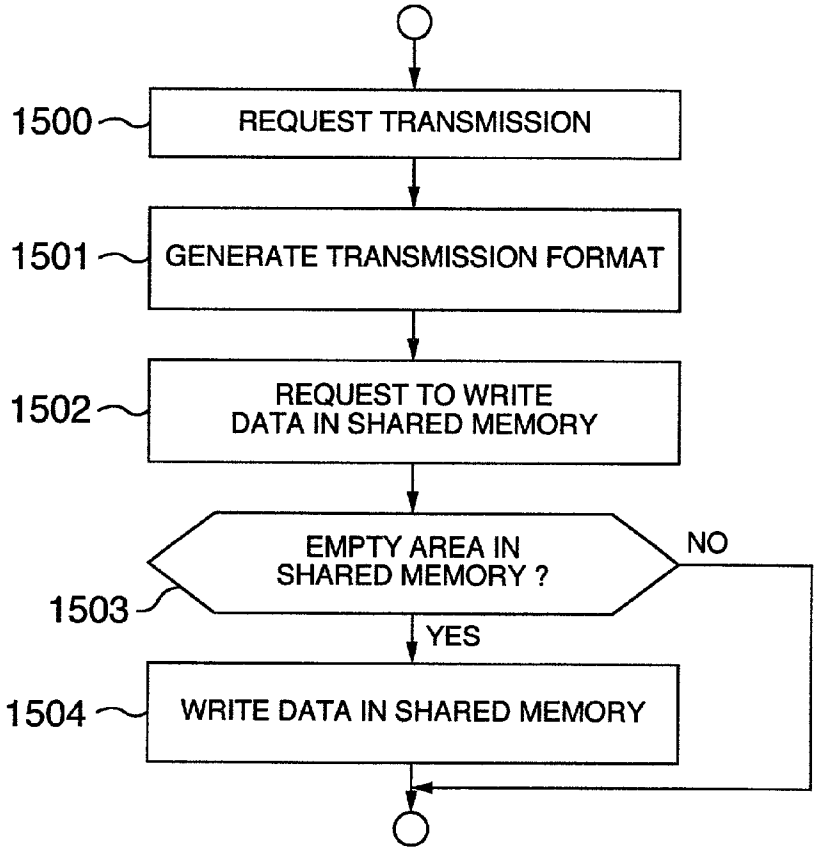
1500
REQUEST TRANSMISSION
1501
GENERATE TRANSMISSION FORMAT
1502
REQUEST TO WRITE DATA IN SHARED MEMORY
1503
EMPTY AREA IN SHARED MEMORY ?
NO
YES
1504
WRITE DATA IN SHARED MEMORY

FIG.16

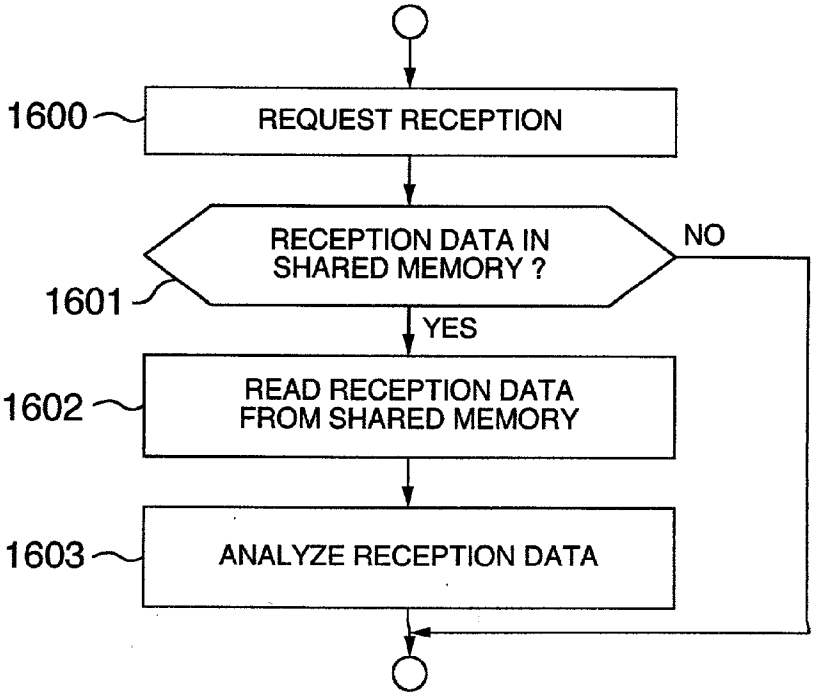
1600
REQUEST RECEPTION
1601
RECEPTION DATA IN SHARED MEMORY ?
NO
YES
1602
READ RECEPTION DATA FROM SHARED MEMORY
1603
ANALYZE RECEPTION DATA

COMPUTER SYSTEM AND A METHOD FOR CONTROLLING A COMPUTER SYSTEM

BACKGROUND OF THE INVENTION

[0001] The present invention relates to a computer system and a method for controlling a computer system in which a plurality of operating systems (OS) operate on one computer, and in particular, to a computer system and a method for controlling a computer system in which computer resources can be efficiently used or operated in an operating state of a plurality of operating systems.

[0002] To improve reliability of computers, the JP-A-11-353292 describes a control technique of load distribution of the background art. The technique is called "cluster system" in which when an operating system running on a computer fails, another operating system receives processing of the failed operating system to continue the processing. In the system of the background art, at a failure of an operating system on a computer, programs running on the computer can be continuously executed.

[0003] To operate a plurality of operating systems in the cluster system which is a computer system of the background art, an equal number of computers and operating systems are required. The cluster system of the background art includes active computers and standby computers, and the active and standby computers operate independent of each other. In this connection, an active computer is a computer ordinarily operating, and a standby computer is a computer arranged to take over, when the active computer fails, processing of the failed computer to thereby continue the processing.

[0004] Therefore, in the cluster system of the background art, when a failure occurs on an active computer, processing thereof is passed to a standby computer. However, when a process is running on the standby computer, entire processing capability of the active computer cannot be achieved by the standby computer. In the background art system, while the standby system is kept stopped to take over the processing of the active computer, the computer resource of the standby computer cannot be efficiently used.

[0005] In a cluster system including, for example, two computers, one computer is an active system and the other one computer is a standby system. At occurrence of a failure in the active computer, when it is necessary that the standby computer achieves entire processing capability of the active computer failed, the standby computer must have processing capability at least equal to that of the failed computer. Moreover, at the failure in the active computer, the standby computer must stop processing being executed on the standby computer and then takes over processing from the failed computer to execute the processing. To execute the processing taken from the failed computer without stopping the own processing being executed by the standby computer, the standby computer must have processing capability higher than that of the failed computer.

[0006] Consequently, the cluster system of the background art is attended with a problem in which to achieve processing capability of one computer of the ordinary active system, there are required two computers each of which has processing capability equal to or more than that of the computer of the active system.

SUMMARY OF THE INVENTION

[0007] It is therefore an object of the present invention, which has been devised to remove the problems, to provide a computer system and a method for controlling a computer system wherein a cluster system is configured to improve computer reliability and the system can be effectively operated by more efficiently using computer resources.

[0008] In accordance with the present invention, the object can be achieved by a method in which a plurality of operating systems are operated in one computer system and computer resources are updated and reallocated to efficiently use the computer resources according to states of operating systems in the computer system. For example, a cluster system is configured in one computer system including an operating system of an active system and another operating system of a standby system. A larger part of the computer resources are allocated to the active operative system. When a failure occurs in the active operating system, the standby operating system takes over processing of the failed operating system. The larger part of computer resources are allocated to the standby operating system, which then starts operation as a new active operating system. This leads to more efficient use of the computer resources.

[0009] The object can be achieved by an operation in which the system monitors not only failures of operating systems, but also various states using an environment of update and reallocation of the computer resources to efficiently use the computer resources according to the states thus monitored. For example, when the number of processing assigned to an operating system increases, load on the operating system becomes higher. In this situation, a larger number of computer resources are assigned to the operating system to increase processing capability of the operating system. This relatively decreases the load imposed on the operating system. When load is increased in all operating systems, standby computer resources such as standby central processing units (CPU) and standby memories are added to the system to increase system processing capability. After the processing is terminated, the computer resources added are released. Therefore, the computer resources can be efficiently used.

[0010] The object can be achieved by a method in which when a plurality of users accessing a computer system by reallocating computer resources desire a larger part of computer resources in a particular state, each user registers his or her request to a management section of the computer system. After the desired computer resources are used, the user is charged according to a ratio of the used computer resources. The computer system can be therefore developed as a server for a plurality of users. It is possible to provide the computer system with flexible usability including an account system or a charging system.

[0011] The object can be achieved by a system including a multiple operating system management controller which operates a plurality of operating systems in one computer system. The multiple operating system management controller manages all operating systems and provides a shared memory for the operating systems. Using the shared memory, the operating systems can communicate under supervision of the multiple operating system management controller with each other via the shared memory without using any external input/output device. Using the commu-

nicating function, the controller generates a communication protocol equivalent to a protocol used by a network to thereby support communication with the shared memory. That is, the system can implement a virtual external input/output device on the main memory without using any particular protocol.

BRIEF DESCRIPTION OF THE DRAWINGS

[0012] The present invention will be more apparent from the following detailed description, when taken in conjunction with the accompanying drawings, in which:

[0013] **FIG. 1** is a block diagram showing constitution of a first embodiment of a computer system of the present invention;

[0014] **FIG. 2** is a block diagram schematically showing a system construction including a cluster configuration of operating systems running in a computer system;

[0015] **FIG. 3** is a diagram showing tables to control a computer state;

[0016] **FIG. 4** is a flowchart showing operation to update computer resources at a failure in an operating system;

[0017] **FIG. 5** is a diagram showing tables necessary for a second embodiment of the present invention;

[0018] **FIG. 6** is a diagram for explaining a computer resource update table to update computer resource ratios according to load on operating systems;

[0019] **FIG. 7** is a diagram for explaining a computer resource update state table containing load on computer resources;

[0020] **FIG. 8** is a flowchart showing an operation procedure for each operating system to update computer resources;

[0021] **FIG. 9** is a diagram for explaining a layout of a computer resource update table for a batch processing system;

[0022] **FIG. 10** is a flowchart for explaining operation to update computer resources of a batch processing system;

[0023] **FIG. 11** is a diagram for explaining constitution of a user configuration area including a user account table and a user register table necessary for a third embodiment of the present invention;

[0024] **FIG. 12** is a diagram for explaining a layout of a computer resource account standard area including account standard tables necessary for accounting calculation;

[0025] **FIG. 13** is a flowchart for explaining an accounting procedure according to use of computer resources;

[0026] **FIG. 14** is a block diagram schematically showing a fourth embodiment of a computer system in which operating systems are configured in a cluster layout;

[0027] **FIG. 15** is a flowchart for explaining a transmission procedure for communication with a shared memory; and

[0028] **FIG. 16** is a flowchart for explaining a reception procedure for communication with a shared memory.

DESCRIPTION OF THE EMBODIMENTS

[0029] Referring now to the accompanying drawings, description will be given in detail of an embodiment of a computer system and an embodiment of a method of controlling a computer system in accordance with the present invention.

[0030] **FIG. 1** shows structure of a first embodiment of a computer system in a block diagram. **FIG. 2** shows in a block diagram a schematic configuration of a computer system including operating systems in a cluster layout. **FIG. 3** shows tables to control states of a computer. **FIG. 4** shows, in a flowchart, operation to update computer resources at a failure of an operating system. In **FIG. 1, a** computer system **100** includes a processor group **110**, a main memory **120**, an external input/output device group **130**, a multiple operating system (multi OS) management control supporter **140**, and a bus **150** establishing connections between the constituent components. In **FIG. 2, a** multiple operating system management control supporter **200** controls first and second operating systems **201** and **202**, cluster services **203** and **204**, monitor agents **205** and **206**, applications **207** and **208**, first and second operating system CPU groups **221** and **222**, and terminals **230** to **232**.

[0031] The computer system **100** of the first embodiment includes a processor group **110**, a main memory **120**, an external input/output device group **130**, a multiple operating system management control supporter **140** to operate a plurality of operating systems in one computer system, and a bus **150** connecting the constituent components to each other as shown in **FIG. 1**. To enable one computer system to execute a plurality of operating systems, the supporter **140** intervenes between the processor group **110**, the main memory **120**, and the external device group **130** of the computer system **100**. The processor group **110** is a set of one or more processors (CPUs) and includes processors **11***a*, **11***b* . . . , **11***n*. The main memory **120** includes main memory areas **12***a* to **12***n* independent of each other. The areas **12***a* to **12***n* are allocated respectively to operating systems, i.e., operating system **1** (OS-**1**) to operating system n (OS-n). The main memory **120** further includes a main storage area **121** for the multiple operating system management controller and an empty area **122** to be reserved. The external device group **130** includes an input keyboard **131**, an output display **132**, external storages **133** to **135** for respective operating systems, and communicating devices **136** and **137**, and other devices, not shown.

[0032] In the example of **FIG. 2** schematically showing operating systems running in a computer system configured as shown in **FIG. 1**, the first and second operating systems OS-**1** and OS-**2** are arranged in a cluster layout. The external storage **133** is allocated to OS-**1**, the external device **134** is allocated to OS-**2**, the disk device **135** is shared between OS-**1** and OS-**2**, the communication devices **136** and **137** are allocated to OS-**1**, and the communication devices **138** and **139** are allocated to OS-**2**. The configuration further includes a cable **211** to connect the communication device **136** of OS-**1** to the communication device **139** of OS-**2** and a cable **212** to connect the communication device **137** of OS-**1** to the communication device **138** of OS-**2**. The cable **211** is a cable to establish external connection to other computers. The cable **212** is a cable for cluster connection only between clusters, namely, between OS-**1** and OS-**2**. **FIG. 2** shows

two kinds of cables. This is only to improve reliability of the cluster, and the cluster layout can be constructed without using the cable **212**. The CPU group **221** is allocated to OS-**1** and the CPU group **222** is allocated to OS-**2**.

[**0033**] The multiple operating system management controller **200** is allocated to the multiple operating system management controller area **121** of the main memory **120** in **FIG. 1**. The controller **200** updates computer resources, namely, the processor group **110**, the main memory **120**, and the external input/output device group **130**. Any terminals **230** to **232** to be connected to clusters are connected to the cable **211**. One of the terminals, for example, the terminal **230** may serve a function as a manager terminal which controls states of OS-**1** and OS-**2** and notifies, according to the states, update information of computer resources via the cable **211** and each operating system.

[**0034**] The first and second operating systems **201** and **202** are respectively allocated to the OS-**1** area **12***a* and the OS-**2** area **12***b* of the main memory **120**. The cluster services **203** and **204**, the monitor agents **205** and **206**, and applications **207** and **208** for the respective operating systems are respectively stored in the areas **12***a* and **12***b*. Each of the monitor agents **205** and **206** is a program which analyzes computer system states and which requests update and/or allocation of computer resources to the multiple operating system management controller according to the computer system states to thereby efficiently use the computer resources.

[**0035**] The CPU groups **221** and **222** for the first and second operating systems are allocated in either one of two methods. First, CPU-**1** and CPU-**2** of the CPU group **110** are allocated to the first operating system and are collectively called a CPU group **221**. CPU-**3** and CPU-**4** of the CPU group **110** are allocated to the second operating system and are collectively called a CPU group **222**. Each CPU is operated only by the associated operating system. Second, CPU**1** and CPU**2** are allocated to both CPU groups **220** and **221**. Each CPU is allocated to another operating system at a predetermined interval of time. Either method may be used to allocate the CPU groups to the operating systems according to the present invention. In accordance with the present invention, the computer resources such as the CPU and the memory are updated to be allocated to a plurality of operating systems of the cluster system according to the states of the operating systems. For example, when the cluster system includes two operating systems in which a first operating system operates as an active system and a second operating system operates as a standby system, a larger number of computer resources are allocated to the active operating system. The allocation of computer resources to the operating systems is managed using a computer resource management table or computer state table **300**.

[**0036**] The table **300** to manage allocation of computer resources to OS-**1** and OS-**2** in the cluster system is configured as shown in **FIG. 3** and is stored in an area, not shown, of the main memory **120**. The multiple operating system management control supporter **140** manages the table **300**. This is also the case with all tables which will be described later. The table **300** includes a computer resource allocation table **310** and an operating system state table **320**. In the supporter **140** managing the table **300**, a processing executing section is disposed for each resource. The processing executing section recognizes the computer states and the computer resource state according to values in the table **300** and updates allocation of the computer resource. The computer resource allocation table **310** includes entries of which each includes a computer resource name field **311**, a computer resource service ratio field **312** for the active computer, and a computer resource service ratio field **313** for the standby computer. This provides a relationship between the computer resource and a role of the computer in the cluster system. Each entry of the operating system state table **320** includes an operating system name field **321**, a state information field **322** of each operating system, an information field **323** to indicate that the operating system is an active or standby system, and a service ratio field **324** indicating a service ratio of resource (CPU) for the operating system. The table **320** provides the state of operation of each operating system.

[**0037**] The computer resource management table or the computer state table **300** having a structure as shown in **FIG. 3** is updated by the processing executing sections which manage the tables **310** and **320** according to the cluster configuration and the allocation of roles of the processing executing sections of the respective resources. In the table **300** shown in **FIG. 3,** 95% of the CPU resources are allocated to the active OS-**1** and 5% thereof are allocated to the standby OS-**2**. Although **FIG. 3** does not show allocation of areas of the main memory, a larger quantity of the main memory is allocated to the active OS-**1**. The main memory allocation may be conducted according to a range of addresses, not by the service ratio. Although the resource name fields of the computer resource allocation table **310** are "CPU" and "main memory", the number of external storages reserved for use may also be registered to the table **310**.

[**0038**] Referring next to the flowchart of **FIG. 4**, description will be given of operation to update computer resources at a failure of an operating system. In this example, the monitor agents **205** and **206** monitor the computer resource table **300** shown in **FIG. 3**. At a failure of OS-**1** in the active system, the cluster services **203** and **204**, the operating system management controller **200**, and the monitor agents **205** and **206** cooperatively update computer resources.

[**0039**] (1) The monitor agents **205** and **206** periodically communicate respectively with the cluster services **203** and **204** and with the multiple operating system management controller **200**. Each of the monitor agents **205** and **206** acquires from either one of the communicating partners information whether or not a failure has occurred in an operating system other than the operating system under which the pertinent monitor agent is running (step **400**).

[**0040**] (2) The monitor agent **205** or **206** determines whether or not a failure has occurred in an operating system other than the operating system under which the pertinent monitor agent is running. If no failure is detected, processing is terminated (step **401**).

[**0041**] (3) If a failure is detected in OS-**1** as an active operating system, the monitor agent **206** running under the standby operating system detects occurrence of a failure in OS-**1** in the active system. The monitor agent **206** of the standby OS-**2** then accesses the computer resource allocation table **310** to acquire therefrom information indicating how to update computer resources in the pertinent situation (step **402**).

[0042] (4) In this example, the monitor agent **206** under control of the standby operating system detects a failure in the active operating system. Therefore, at a failure in the active operating system, the standby operating system takes over processing of the active system and then starts its operation as an active operating system. Consequently, the CPU allocation ratio of the standby operating system up to this point is changed to the CPU allocation ratio of the current operating system. The monitor agent **206** notifies the update of computer resources to the multiple operating system management controller **200** which actually manages operation of the CPU (step **403**).

[0043] (5) After the controller **200** conducts the pertinent processing, the operating system state table **320** is updated. The operation state, the type of system, and the CPU use ratio are updated. After the occurrence of the failure, the active operating system becomes a new standby operating system, the standby operating system becomes a new active operating system, and the CPU use ratio is also accordingly changed to a value in the table **320**. The main memory use ratio is also updated (step **404**).

[0044] (6) As preparation for a case in which the new standby operating system is restarted or returned, current information, namely, information that the restarted operating system operates as a standby system is notified to the monitor agent which will again operate under control of the restarted operating system. The processing is thereby terminated (step **405**).

[0045] In the example of **FIG. 4**, the monitor agents monitor the computer state table **300**. However, the table **300** may be managed by the manager terminal **230**, not by the monitor agents. In this case, the manager terminal **230** can manage the states of the operating systems in a centralized manner, and hence the processing of step **405** becomes unnecessary. By connecting the client services of the respective cluster services **203** and **204** to the manager terminal **230**, the states of the respective clusters can be obtained. In the operation, the manager terminal **230** need periodically issue, in the processing of step **400**, an inquiry to the cluster services **203** and **204** for the operation states of the respective operating systems. In this example, the standby operating system is basically the same as the active operating system. However, the operating systems may differ from each other. It is only necessary that each operating system can execute processing of the same applications.

[0046] In the first embodiment of the present invention, a larger part of the CPU resources are allocated to the active operating system with a larger use ratio. At occurrence of a failure in the active operating system, the larger part of the CPU resources can be allocated to the standby operating system which receives processing of the failed operating system and which starts operation as a new active operating system. The computer resources can be therefore more efficiently used.

[0047] In the first embodiment of the present invention, the allocation ratio of computer resources to each operating system is determined according to the operation mode of the operating system, namely, the active or standby operating system. When the operation mode is changed, the computer resource allocation ratio is changed. However, in accordance with the present invention, the computer resource allocation ratio may be changed according to amount of processing load on each operating system or according to a particular time to efficiently use the computer resources. Next, a second embodiment of the present invention will be described.

[0048] **FIG. 5** shows constitution of tables necessary for the second embodiment. **FIG. 6** shows a computer resource update table containing computer resource update information when a high load is imposed onto an operating system. **FIG. 7** shows constitution of a computer resource update table including load of computer resources. **FIG. 8** shows in a flowchart a processing procedure for each operating system to update computer resources.

[0049] The tables of **FIG. 5** necessary for the second embodiment represent overall resources of the computer system and resource allocation to each operating system. The tables are stored in a computer resource configuration area **500**. That is, the area **500** includes a CPU use table **510**, a main memory use table **520**, an external device use table **530**, a physical CPU configuration table **540**, and an operating system configuration table **550**.

[0050] The CPU use table **510** includes an item field **511**. The number of CPUs in use and the number of CPUs not in use are registered to the fields **511**. The table **510** further includes an entry field **512** of a value indicating the number of CPUs. The data items are used to change resources. The main memory use table **520** includes an item field **521**. The memory capacity in use and the memory capacity not in use are registered to the fields **521**. The table **520** further includes a value field **522**. The values are registered to the fields **522** corresponding to the fields **521**. The external device use table **530** includes an item field **531**. External input/output devices are registered to the fields **531**. The table **530** includes an information field **532**. Whether or not the external input/output device is in use is registered to each associated field **532**. The physical CPU configuration table **540** indicates states of CPUs independently used in the CPU group **110**. The physical CPU configuration table **540** includes an item field **541**. Identifiers of operation systems to subdivide the CPU group **110** are registered to the fields **541**. For each operating system identifier, priority among the operating systems is registered to a priority field **542**. An initial number of CPUs resultant from initial subdivision of the CPU group **110** is registered to an initial no. field **543**. A current number of CPUs actually updated by a monitor agent periodically updating the table **540** is registered to a current number field **544**. The priority field **542** contains a priority level which is used to change the resources when the operating system further requests CPUs. The operating system configuration table **550** is a table to which initial states of the respective operating systems are registered. The table includes a name field **551**. For each operating system name **551**, an execution priority level **552** between the operating systems, a type of operating system **553**, an identifier **554** of a physical CPU configuration table, a CPU service ratio **555**, a main memory use capacity **556**, and external devices in use **556** and **557** are registered to the table **550**.

[0051] In the tables **550** of **FIG. 5**, the number of the external devices in use is updated according to connections of the computer system **100**. The type of operating system

553 is a transaction type to continuously execute processing and a batch type to execute accumulated processing at a time. In the second embodiment of the present invention, the computer resources are updated in consideration of the difference in the characteristic between the processing systems. This leads to more efficient allocation of the computer resources.

[**0052**] To the computer resource update table **600** of **FIG. 6** containing information to update computer resources when load is imposed on an operating system, an operating system name **601**, an update rule identifier **602** for each operating system, and other information items are registered as below. A wait flag **603** is a flag which indicates, when there exists a state in which computer resources cannot be actually updated for the condition of the identifier **602** indicating a rule, whether or not the update of computer resource is again retried. The wait flag **603** contains a numeric value. Each time an agent which periodically conducts the monitoring operation executes processing of the flowchart shown in **FIG. 8**, the agent checks the wait flag **603** to determine whether or not computer resource can be updated. The value of the flag **603** indicates the number of checks made by the agent. For the operating system name **601**, the monitor agents **205** and **206** check the operating system load according to a computer resource update condition **604**. The condition **604** includes the respective threshold data according to CPU **606**, a main memory **607**, and the external input/output device **608** for each computer resource. If the registered conditions are satisfied as a result of the check, the monitor agent **205** and **206** issues a request for configuration according to the values of the CPU **609**, the main memory **610**, and the external input/output device **611** of a computer resource update configuration **605**. If there exists any setting shared between the operating system, each operating system selects a rule shared therebetween.

[**0053**] The computer resource update state table **700** shown in **FIG. 7** contains an operating system name **701** and states of each operating system name **701**. The states include load of each computer resource allocated to each operating system. The monitor agent determines, according to the value of load, whether or not computer resources are to be updated. The monitor agent also manages the states of computer resources after the update. The states are managed together with default values to restore the values. For each operating system name **701**, current computer sources including a CPU **702**, a main memory **704**, an external input/output device **706**, and an external input/output device **708** are registered. For the respective items, a CPU load **703**, a main memory load **705**, an external input/output device load **707**, and an external input/output device load **709** are stored in the table **700**. The states of computer resources are used as criteria to determine whether or not a computer resource update rule is to be used.

[**0054**] Referring now to the flowchart of **FIG. 8**, description will be given of a processing procedure for each operating system to update computer resources. The processing is executed by the monitor agent in cooperation with the operating system.

[**0055**] (1) In cooperation with each operation system, the monitor agent periodically checks the operation state of the operating system and stores the operation state in the computer resource update state table **700** representing load of each computer resources. The monitor agent checks whether or not a high load is imposed on the operating system according to information of the computer resource update table **600** (steps **800** and **801**).

[**0056**] (2) If the load on the operating system is low as a result of the check in step **801**, the monitor agent checks whether or not the resources allocated to the operating system match the default values. If the matching results, the computer resources need not be restored to the original state. Therefore, the monitor agent terminates processing without any special operation (step **805**).

[**0057**] (3) If mismatching results from the check to determine whether or not the resources allocated to the operating system match the default values, the monitor agent checks to determine whether or not the state of the computer resources can be restored to the original state. If the restoration is impossible, the monitor agent terminates processing without any special operation (step **806**).

[**0058**] (4) If the load on the operating system is high as a result of the check in step **801**, the monitor agent checks to determine whether or not the priority level of the operating system is "1" in the operating system configuration table **550**. If the priority level is other than "1", the monitor agent acquires a load state of another operating system from the computer resource update table **700** and checks to determine whether or not the load acquired is not high and whether or not the current computer resources can be updated (steps **802** and **803**).

[**0059**] (5) If the priority level is "1" as a result of the check in step **802**, if the load acquired is not high and the current computer resources can be updated as a result of the check in step **803**, or if the state of the computer resources can be restored as a result of the check in step **806**, the monitor agent accesses the computer resource update table **600** to acquire therefrom data to change the computer resources (step **807**).

[**0060**] (6) If the load acquired is high and the current computer resources cannot be updated as a result of the check in step **803**, the monitor agent checks whether or not the wait flag **603** is set for the pertinent operating system and another operating system. If the wait flag is set for either one thereof, the monitor agent updates the wait flag of the pertinent operating system, namely, adds one to the value of the wait flag, and then terminates processing (step **804**).

[**0061**] (7) If the wait flag is not set for the operating systems as a result of the check in step **804**, the monitor agent accesses the computer resource update table **600** to acquire therefrom data to change the computer resources. The monitor agent then acquires additional computer resources according to the data (step **808**).

[**0062**] (8) After step **807** or **808**, the monitor agent issues a computer resource update request to the operation system management controller which can actually update the computer resources. After the update of computer resources is finished, the monitor agent updates the computer resource update state table **700** (steps **809** and **810**).

[0063] According to the second embodiment of the present invention, the load on the operating system is monitored through the processing above. A computer resource update request is issued according to the state of the operating system load to thereby efficiently use computer resources. The computer resources can be therefore efficiently allocated to the operating systems.

[0064] In the second embodiment of the present invention, the computer resources to be allocated to the operating systems are changed according to the states of the operating systems. However, in accordance with the present invention, when it is necessary to manage a processing group of each operating system and to preferentially execute the processing of management as compared with the processing of operating systems, a larger part of computer resources can be allocated to an operating system to preferentially execute processing. In accordance with the present invention, computer resources not allocated to any operating systems can be managed and the use ratio of each computer resource allocated to operating systems is monitored. When the use ratio becomes high for an operating system, computer resources not allocated can be allocated to the operating system.

[0065] By applying the second embodiment of the present invention to allocation of computer resources to a batch processing system, the batch processing can be executed in a concentrated manner and hence the batch processing can be executed with high efficiency. An example of the batch processing will be described.

[0066] **FIG. 9** shows constitution of a computer resource update table for a batch processing system. **FIG. 10** shows in a flowchart a processing procedure to update computer resources for the batch processing system. In this example, each time batch processing is executed, the computer resources of the batch processing system are updated. When other computer resources are available, the resources are allocated to the batch processing system to execute the batch processing in a concentrated manner.

[0067] In **FIG. 9, a** computer resource update table **900** includes an entry field of a job name **901** of batch processing. For each job name **901**, the table **900** includes an operating system name **902** for execution of the job, a job start time **903**, a job end time **904**, and computer resource update conditions **906** of each computer resource between the job start time and the job end time. The conditions **906** are specified in the same fashion as for the computer resource update table **600**. Like the table **600**, the table **900** includes a wait flag **905**.

[0068] Referring next to the flowchart shown in **FIG. 10**, description will be given of a processing process to update computer resources of the batch processing system.

[0069] (1) The monitor agent **205** or **206** monitors the job start time in the table **900** to determine whether or not the job start time is at least equal to the current time. If the job start time is not reached, the monitor agent **205** or **206** terminates the processing without conducting any particular operation (steps **1000** and **1001**).

[0070] (2) If the job start time is reached as a result of the check in step **1001**, the monitor agent **205** or **206** checks to determine whether or not the priority level of the operating system of the batch system is "1" as in the processing of **FIG. 8**. If the priority level is "1", since computer resources have been sufficiently allocated according to the priority level, the monitor agents **205** and **206** terminate the processing without conducting any particular operation (step **1002**).

[0071] (3) If the priority level is other than "1" as a result of the check in step **1002**, the monitor agents **205** and **206** check load of another operating system. If a heavy load is imposed on the operating system, the monitor agent **205** or **206** assumes that allocation of computer resources is impossible and hence terminates the processing without conducting any particular operation (step **1003**).

[0072] (4) If a heavy load is not imposed on the operating system as a result of the check in step **1003**, the monitor agent **205** or **206** checks the wait flag **905** to determine whether or not another operating system is in a wait state after having issued a computer resource update request. If there exists an operating system for which the wait flag has been set, the processing is terminated (step **1004**).

[0073] (5) If the wait flag has not been set as a result of the check in step **1004**, the monitor agent **205** or **206** assumes that computer resources can be updated and acquires an update condition from the computer resource update table **900** and then notifies the condition to the multiple operating system management controller **200** which actually updates the computer resources. After the resource update is finished, the monitor agent **205** or **206** writes the associated state in the computer resource update state table **700** and then terminates the processing (steps **1005** to **1007**).

[0074] After the processing shown in **FIG. 10**, the batch processing system executes batch processing by use of the updated computer resources. After the batch processing is completed or when the job end time **904** of the computer resource update table **900** is reached, the monitor agent **205** or **206** restores the state of the computer resources to the state before the update.

[0075] As above, the monitor agents manage the states of computers to appropriately update the computer resources. Therefore, the computer resources can be efficiently allocated to a plurality of operating systems.

[0076] In general, when a computer of a multiprocessor environment is used as a server machine, a plurality of users access the server machine. In this situation, to guarantee processing performance of the computer accessed, the computer resources are subdivided to be allocated to the respective users. The system to update the computer resources according to the present invention can be assigned to the server machine and an accounting operation or a charging operation can be conducted according to the states of update of the computer resources. By the accounting method, the users can flexibly use the server machine. Description will be next described of a third embodiment of the present invention. In the third embodiment, the computer resource update technique is applied to an accounting method.

[0077] **FIG. 11** shows a configuration of a user configuration area **1100** including a user account table **1110** and a user register table **1120** necessary for the third embodiment. **FIG. 12** shows a configuration of a computer resource

account standard area **1200** including account standard tables necessary for account calculation. **FIG. 13** shows in a flowchart a processing procedure for the accounting operation according to use of computer resources.

[**0078**] The user configuration area **1100** includes the user account table **1110** and the user register table **1120**. The table **1110** is updated according to a request from each user to update computer resources. The table **1110** includes a user identifier field **1111**. For each user identifier **1111**, the table **1110** includes a time charged field **1112**, CPU charge state fields **1113** and **1114**, main memory charge state fields **1115** and **1116**, external input/output device charge state fields **1117** and **1118**, and a total charge state field **1119**. Appropriate values are set to the respective fields or the contents thereof are appropriately updated. The register table **1120** stores data initially registered by users and includes a user identifier field **1121**. For each user ID **1121**, the table **1120** includes a start time field **1122**, an end time field **1123**, a CPU registration field **1124**, a main memory registration field **1125**, an external input/output device registration field **1126**, and a standard account field **1127**. The fields up to the field **1126** are initialized to the respective initial values. According to the values initialized, a standard account value is calculated to be set to the standard account field **1127**.

[**0079**] In the third embodiment of the present invention, the accounting operation is carried out according to information set to the user account table **1110** and the user register table **1120** shown in **FIG. 11**. In the tables, a circle indicates that the pertinent item is free of charge excepting the standard charge. For example, when user **1** uses one CPU, the user can conduct operation without any additional charge. When the user uses computer resources exceeding the standard computer resources, the user is charged for the resources used and the charge is added to the standard charge.

[**0080**] The computer resource account standard area **1200** of **FIG. 12** includes tables to which account items are set according to respective conditions to conduct the accounting operation. The tables are a CPU account standard table **1210**, a main memory account standard table **1230**, and an external device account standard table **1250**. Standard values for the accounting operation are set to the tables. Each table includes items of account standard values determined for each computer resource according to a use time and a use amount of the pertinent resource.

[**0081**] Referring now to the flowchart of **FIG. 13**, description will be given of an accounting procedure according to use of computer resources.

[**0082**] (1) The system confirms operation or use of the system by a user. The system acquires a condition from the user, namely, an execution request to execute processing specified by the user. Whether or not a request for computer resource is present is checked. If the request is absent, the computer resources are not updated and control goes to processing of a request from, for example, another user (steps **1300** to **1302**).

[**0083**] (2) When a user request for resource update is present as a result of the check in step **1302**, a processing request is issued to the multiple operating system management controller **200** according to the condition of the request. After the computer resources are updated, the computer resource update state table **700** is updated, and an associated condition is registered to an associated account table (steps **1303** and **1304**).

[**0084**] (3) After the account condition is updated, the state of the computer resources is restored to the original state, a use time and account information are stored in the user account table **1110**, and the processing is terminated (step **1305**).

[**0085**] According to the third embodiment of the present invention, the user can flexibly update the computer environment. Only when necessary, a high-performance computer system can be supplied. When unnecessary, a computer system having minimum performance is supplied. Therefore, the user can use the computer system at a flexible cost.

[**0086**] **FIG. 14** shows in a block diagram a schematic configuration of the fourth embodiment of a computer system in which operating systems are arranged in a cluster layout according to the present invention. **FIG. 15** shows a transmitting procedure to communicate with a shared memory in a flowchart. **FIG. 16** shows a receiving procedure to communicate with a shared memory in a flowchart. The fourth embodiment will be next described.

[**0087**] In the fourth embodiment, the multiple operating system management controller **200** includes a shared memory **1400** shared between the operating systems. In this configuration, data in a format for communication is generated in the shared memory **1400**. The system conducts read and write operations to communicate the data in a virtual communication network without using any communication cable. The fourth embodiment of **FIG. 14** is implemented by adding the shared memory **1400** to the configuration shown in **FIG. 2**, specifically, to the multiple operating system management controller **200**. The shared memory communication may be used as an internal communication when operating systems are configured in a cluster layout. In the fourth embodiment, the cable **212** of the example of **FIG. 2** can be dispensed with, and it is possible to construct an inner communication network. The shared memory communication is accomplished by shared memory communication drivers **1401** and **1402** arranged in the respective operating system areas.

[**0088**] The transmitting procedure of the shared memory communication is carried out according to the flowchart shown in **FIG. 15** as below.

[**0089**] (1) The shared memory communication driver **1401** or **1402** converts, on receiving a transmission request from a program under control of an operating system, transmission data associated with the transmission request into a communication format. When it is assumed, for example, that the Ethernet of Transmission Control Protocol/Internet Protocol (TCP/IP) is used for communication, the transmission data is converted into a format of Ethernet (steps **1500** and **1501**).

[**0090**] (2) A write request is issued to the multiple operating system management controller **200** to write the data (step **1502**).

[**0091**] (3) The controller **200** checks to determine whether the shared memory **1400** includes an empty

area. If no empty area is found, processing is once terminated. The processing is set to a wait state to await an empty area in shared memory **1400** (step **1503**).

[**0092**] (4) If an empty area is found as a result of the check in step **1503**, the controller **200** writes the transmission data in the area of the shared memory **1400** (step **1504**).

[**0093**] Since multiple operating system management controller **200** actually writes the transmission data in the shared memory **1400**, the communication driver **1401** or **1402** only transfers the write data to the controller **200**.

[**0094**] The receiving procedure of the shared memory communication is accomplished according to the flowchart shown in **FIG. 16** as follows. The operating system may issue a reception request to the shared memory communication driver at a fixed interval of time to receive reception data only if the reception data is present. Alternatively, the shared memory communication driver on the transmission side may notify the data transmission to the reception side in a predetermined procedure.

[**0095**] (1) Having received a reception request from a program under control of an operating system, the shared memory communication driver **1401** or **1402** determines presence or absence of reception data associated with the reception request. Specifically, a check is made to determine whether or not reception data has been written in the shared memory **1400**. If no reception data is found, processing is terminated (steps **1600** and **1601**).

[**0096**] (2) If reception data is found in the shared memory **1400** as a result of the check in step **1601**, the reception data is read therefrom and the communication format of the reception data is analyzed, and an inherent part of reception data is thereby obtained (steps **1602** and **1603**).

[**0097**] In the example, the communication method using the shared memory makes it possible to implement a virtual communication cable using the shared memory without any actual communication cable. This method is also used for the network communication in the cluster layout. If the memory includes a nonvolatile memory area, the nonvolatile memory area may be assumed as a virtual external storage. By accessing the virtual external storage via Small Computer System Interface (SCSI), a virtual SCSI communication can be achieved.

[**0098**] According to the present invention, in a computer system in which a plurality of operating systems runs on one computer, the operating systems are configured in a cluster layout in an environment in which computer resources can be updated and reallocated for the operating systems. The state of operation of each operating system is monitored. At occurrence of a failure in an active operating system, a larger part of the computer resources are allocated to another operating system which is in a normal state and which becomes a new operating system. Resultantly, regardless of the failure, the computer system can be operated without changing the processing capability thereof.

[**0099**] According to the present invention, the load of operating systems can be monitored to appropriately allocate computer resources to the operating systems according to the load. Therefore, the processing capability can be appropriately adjusted between the operating systems.

[**0100**] The specification and drawings are, accordingly, to be regarded in an illustrative rather than a restrictive sense. It will, however, be evident that various modifications and changes may be made thereto without departing from the broader spirit and scope of the invention as set forth in the claims.

1. A computer system, comprising:

means for operating a plurality of operating systems on one computer and allocating computer resources to the operating systems;

means for managing the computer resources;

means for updating allocation of the computer resources to the operating systems and restoring the allocation thereof;

means for managing contents respectively of the update of the computer resource allocation and the restoration of the computer resource allocation in relation to a state of operation of each of the operating systems; and

means for updating the computer resource allocation and restoring the computer resource allocation according to a state of operation of each of the operating systems.

2. A method of controlling a computer system including a cluster system on one computer in which a plurality of operating systems are operating, one of the operating systems is used as an active operating system, another one thereof is used as a standby operating system, and when a failure occurs in the active operating system, processing thereof is passed to the standby operating system, comprising the steps of:

monitoring a failure in the active operating system;

monitoring operation to pass processing to the standby operating system;

allocating, when the active operating system is operating, a larger part of the computer resources to the active operating system than to the standby operating system;

allocating, when the standby operating system starts operation after a failure occurs in the active operating system, a larger part of the computer resources to the standby operating system than to the active operating system; and

operating the standby operating system as an active operating system.

3. A method of controlling a computer system in which a plurality of operating systems are operating on one computer, comprising the steps of:

monitoring load on each of the operating systems by monitoring a state of operation of the operating systems;

analyzing the load and determining a cause of a highest load on one of the operating systems; and

allocating, to the operating system having the highest load, computer resources necessary to remove the cause.

4. A method of controlling a computer system in which a plurality of operating systems are operating on one computer, comprising the steps of:

managing a group of processing under each of the operating systems; and

comparing processing between the operating systems to determine processing to be preferentially executed and allocating a larger part of computer resources to the operating system to be preferentially executed.

5. A method of controlling a computer system in which a plurality of operating systems are operating on one computer, comprising the steps of:

managing a group of processing under each of the operating systems and an operation time to execute each processing;

managing a content of update of computer resources and a valid period of time thereof according to the operation time; and

allocating computer resources to each operating system by relating processing under control of the operating system to dynamic allocation of computer resources.

6. A method of controlling a computer system according to claim 3, further comprising the steps of:

managing computer resources not allocated to the operating systems;

managing a use ratio of each computer resource allocated to each operating system; and

allocating the computer resources not allocated yet to the operating systems to each operating system according to the use ratio.

7. A method of controlling a computer system according to claim 6, further comprising the steps of:

managing a user who establishes connection to the computer system to use computer resources;

managing a use time of each computer resource of the user;

updating allocation of computer resources in response to a request from the user;

allocating computer resources set by the user; and

charging according to a state of the computer resource allocation.

8. A method of controlling a computer system in which a plurality of operating systems are operating on one computer, comprising the steps of:

reserving a shared main memory area shared among the operating systems; and

writing data in a format for communication in the main memory area and reading the data from the main memory area, thereby forming a virtual communication medium between the operating systems.

9. A method of controlling a computer system in which a plurality of operating systems are operating on one computer, comprising the steps of:

operating the operating systems independent of each other; and

monitoring operation of each of the operating systems by use of a resource shared among the operating systems.

* * * * *