Trials@uspto.gov
Tel: 571–272–7822

Paper 18
Entered: March 12, 2021

UNITED STATES PATENT AND TRADEMARK OFFICE

BEFORE THE PATENT TRIAL AND APPEAL BOARD

COMMSCOPE TECHNOLOGIES LLC,
Petitioner,

v.

DALI WIRELESS INC.,
Patent Owner.

Case IPR2020-01473
Patent 10,080,178 B2

Before KARL D. EASTHOM, MELISSA A. HAAPALA, and SHARON FENICK, Administrative Patent Judges.

FENICK, Administrative Patent Judge.

DECISION
Granting Institution of *Inter Partes* Review
35 U.S.C. § 314

CommScope v. Dali Wireless
CommScope Exhibit 1004

CommScope Technologies LLC ("Petitioner") filed a Petition to institute an *inter partes* review of claims 1–30 ("challenged claims") of U.S. Patent No. 10,080,178 B2 (Ex. 1001, "the '178 patent"). Paper 1 ("Pet."). Dali Wireless Inc. ("Patent Owner") filed a Preliminary Response. Paper 9 ("Prelim. Resp."). With our authorization (Paper 13), Petitioner filed a Reply relating to our discretion under 35 U.S.C. § 325(a), Paper 15 ("Reply"), and Patent Owner filed a Sur-Reply, Paper 17 ("Sur-Reply"). We have authority under 35 U.S.C. § 6(b)(4) and 35 U.S.C. § 314.

The standard for instituting an *inter partes* review is set forth in 35 U.S.C. § 314(a), which provides that an *inter partes* review may not be instituted "unless . . . there is a reasonable likelihood that the petitioner would prevail with respect to at least 1 of the claims challenged in the petition."

Upon consideration of the Petition, Preliminary Response, and additional briefing we decline to exercise discretion to deny institution under 35 U.S.C. § 325(d), and we determine that Petitioner has demonstrated a reasonable likelihood that it would prevail in showing the unpatentability of at least one challenged claim of the '178 patent. Accordingly, for the reasons that follow, we institute *inter partes* review.

I. BACKGROUND

A. Real Parties-in-Interest

As the real parties-in-interest, Petitioner identifies CommScope Technologies LLC, CommScope, Inc. of North Carolina, CommScope, Inc., and CommScope Holding Company, Inc. Pet. iv. Patent Owner identifies only itself as real party-in-interest. Paper 3, 1.

B. Related Proceedings

Petitioner and Patent Owner identify *Dali Wireless, Inc. v. CommScope Technologies LLC*, No. 1:19-cv-00952-MN (D. Del.) ("the related action") as a related action involving the '178 patent.[1] Pet. iv; Paper 3, 1.

C. The '178 Patent

The '178 patent is titled "Distributed Antenna System" and relates to a distributed antenna system (DAS) that "enables a high degree of flexibility to manage, control, enhance, [and] facilitate the usage and performance of a distributed wireless network." Ex. 1001, codes (54), (57). According to one embodiment of the invention, a distributed antenna system includes digital access units (DAUs), which each connect to associated base stations and serve as an interface between these base stations and digital remote units (DRUs). *Id.* at 4:37–41. The distributed antenna system receives downlink data via radio frequency (RF) signals from the base stations. *Id.* at 4:60–62. After down-conversion, digitization, and conversion to baseband, the DAUs provide these received signals to DRUs. *Id.* at 4:63–5:6. Figure 1 of the '178 patent, reproduced below, is a block diagram showing the basic structure and an example downlink transport. *Id.*at 3:55–58.

[1] According to Petitioner, "[t]he trial date for the district court action is March 2022," after the due date for a Final Written Decision in the instant case. See Pet. 87–88. Patent Owner did not present arguments towards exercising discretion to deny institution under 35 U.S.C. § 314(a). *See Apple Inc. v. Fintiv, Inc.*, IPR2020-00019, Paper 11 (PTAB Mar. 20, 2020) (precedential). Therefore, we do not consider this issue further.

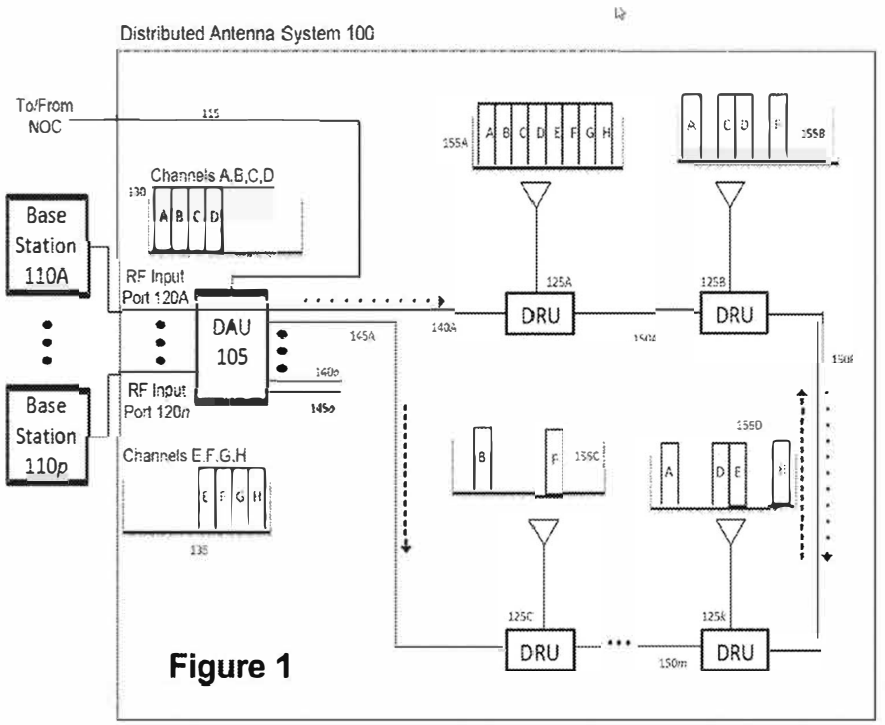

Figure 1

Figure 1 depicts DAU 105 that serves as an interface between associated base stations (110A through 110*p*) and DRUs (125A through 125*k*). *Id.* at 4:38–41, 4:60–62. Some DRUs, e.g., DRU 125B are connected to DAU 105 via a "daisy-chain" connection through its connection 150A to DRU 125A, which is connected directly to DAU 105 through connection 140A. *Id.* at 6:6–7, 6:29–32. As shown in Figure 1, DAU 150 receives composite downlink signal 130, comprising carriers[2] A–D from first base station 110A. *Id.* at 5:59–63. DAU 150 also receives

[2] Elements A–H of Figure 1 are alternatively referred to as "channels" and as "carriers" in the '178 patent. *Compare* Ex. 1001 at 5:17–49, 7:55–7:67, Fig. 1 (describing A–H as channels) *with id.* at 5:62–66, 6:15–25, 6:32–56 (describing A–H as carriers); *see also* Prelim. Resp. 24. We use "carriers" in this section to refer to elements A–H.

composite signal 135, comprising carriers E–H from *p*th base station 110*p*. *Id.* at 5:63–66. Bidirectional optical cables 140A and 145A connect DAU 105 to DRU 125A and 125C, bidirectional optical cables connect the DRUs in a ring configuration. *Id.* at 6:6–15. These connections facilitate networking of DAU105, allowing all carriers A–H to be available to transport data to DRUs 125A–125*k* for downlink. *Id.* at 6:15–18. The antenna ports of the DRUs receive uplink signals and transmit them to the base station via the DAUs. *Id.* at 5:29–42, 10:37–11:22.

Software settings within each DRU are configured in order to control which carrier signals are present in the downlink output signal at the antenna port of the DRU. *Id.* at 6:19–36, 6:43–56. An embedded software control module in a DAU, the DAU Management Control Module, "determin[es] and/or set[s] the appropriate amount of radio resources (such as RF carriers, CDMA codes or TDMA time slots) assigned to a particular DRU or group of DRUs to meet desired capacity and throughput objectives." *Id.* at 11:61–12:6. Another embedded software control module, the DAU monitoring module, "detects which carriers and corresponding time slots for each carrier are active for each DRU [and] provides information to the DAU Management Control Module to help identify when, e.g., a particular downlink carrier is loaded by a percentage greater than a predetermined threshold." *Id.* at 11:61–67, 12:46–54. "If that occurs, the DAU Management Control Module can adaptively modify the system configuration" to deploy additional radio resources for use by a particular DRU needing those resources, and to remove resources from a DRU if it no longer needs the radio resources assigned to it. *Id.* at 12:54–65. This occurs through communication with embedded software control modules in the

DRUs that set individual parameters within the DRU to enable or disable specific radio resources from being transmitted by that DRU. *Id.* at 12:11–33.

Figure 8, reproduced below, illustrates in block diagram form an embodiment of the DAS that includes daisy-chained DAUs. *Id.* at 4:17–19.

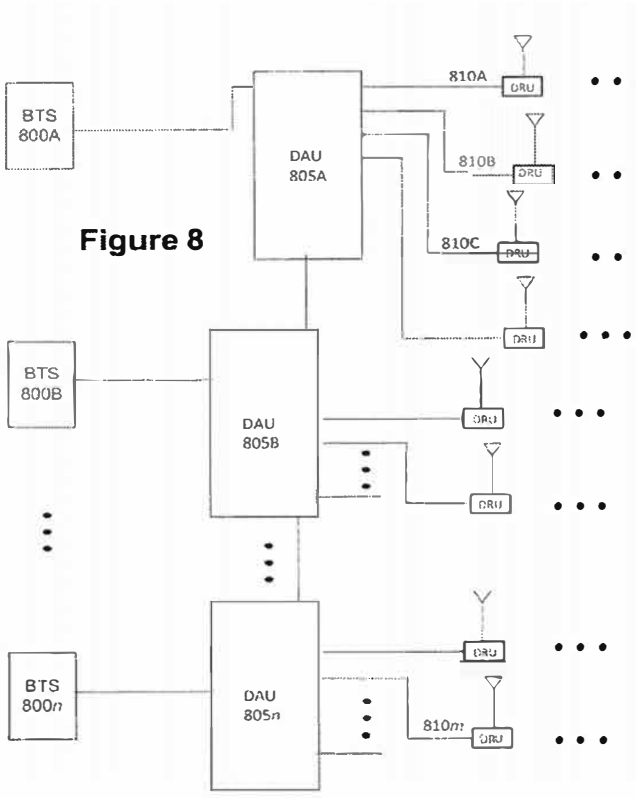

Figure 8

As seen in the DAS of Figure 8 there are multiple DAUs 805A through 805*n*, each connected to one base station. DAUs 805A–805*n* are daisy-chained through connections between the DAUs. *Id.* at 12:36–45. In another embodiment DAUs are connected in a ring configuration. *Id.* at 12:43–45.

D. Illustrative Claim 10

The Petition challenges independent claims 1, 10, 15, 21, and 26, and their dependent claims 2–9, 11–14, 16–20, 22–25, and 27–30. Claim 10, reproduced below with bracketed notations corresponding to those used in the Petition added for reference, is illustrative of the challenged claims at issue:

> 10. [A] A system for transporting wireless communications, comprising:
> [B] a host unit;
> [C] a plurality of remote units, including at least a first remote unit and a second remote unit;
> [D1] wherein the host unit comprises at least one interface to communicatively couple the host unit to at least one signal source;
> [E] wherein the host unit is configured to receive a plurality of downlink channel signals from the at least one signal source;
> [F] wherein the host unit is configured to send digital representations of the plurality of downlink channel signals to the plurality of remote units;
> [G] wherein the host unit is configurable to send digital representations of a first set of downlink channel signals to the first remote unit at a first point in time, the first set of downlink channel signals for transmission at an antenna of the first remote unit;
> [H] wherein the host unit is configurable to send digital representations of a second set of downlink channel signals to the first remote unit at a second point in time, the second set of downlink channel signals for transmission at the antenna of the first remote unit;
> [I] wherein a number of downlink channel signals in the first set of downlink channel signals is different from a number of downlink channel signals in the second set of downlink channel signals; and
> [J] wherein the host unit is configured to receive digital signals from each of the plurality of remote units.

Ex. 1001, 15:3–32.

E. The Asserted Grounds

Petitioner challenges claims of the '178 patent as follows (Pet. 1):

Claims Challenged	35 U.S.C. §[3]	References
1–25	102	Wu[4]
1–25	103	Wu
1–25	103	Wu, Sabat-426[5]
8, 11, 19, 21, 23–25	103	Wu, OBSAI RP3[6], OBSAI BTS[7]
8, 9, 11, 19–25	103	Wu, CPRI[8]
26–30	103	Wu, Sabat-552[9]
1–8, 10, 11, 13, 15–19, 21, 23, 24	102	Oh[10]
1–8, 10, 11, 13, 15–19, 21, 23, 24	103	Oh, Wu

Petitioner additionally relies on the declaration of Dr. Anthony Acampora (Ex. 1003).

---

[3] The Leahy-Smith America Invents Act ("AIA"), Pub. L. No. 112-29, 125 Stat. 284, 287–88 (2011), amended 35 U.S.C. §§ 102, 103. Because the '178 patent claims priority to an application filed before the effective date of the applicable AIA amendment, we refer to the pre-AIA version of 35 U.S.C. § 102 and § 103. *See* Ex. 1001, code (63).
[4] Wu et al., US 2010/0128676 A1, pub. May 27, 2010 (Ex. 1005).
[5] Sabat et al., US 2009/0180426 A1, pub. July 16, 2009 (Ex. 1010).
[6] OBSAI Reference Point 3 Specification Version 3.1 (2006) (Ex. 1007)
[7] OBSAI Open Base Station Architecture Initiative - BTS System Reference Document Version 2.0 (2006) (Ex. 1008)
[8] CPRI Specification V 4.0 (2008-06-30) Interface Specification (Ex. 1006).
[9] Sabat Jr. et al., US 6,963,552 B2, iss. Nov. 8, 2005 (Ex. 1011).
[10] Oh et al., US 7,286,507 B1, iss. Oct. 23, 2007 (Ex. 1023).

II. ANALYSIS

A. Discretionary Denial under 35 U.S.C. § 325(d)

Patent Owner requests that we exercise our discretion under 35 U.S.C. § 325(d) to deny the Petition because Wu, Oh, Sabat-426, and CPRI are the same or substantially similar to art that was before the Examiner during prosecution of the '178 patent. Prelim. Resp. 29–37; Sur-Reply. Patent Owner further argues that the Petitioner has not shown how the Office erred in allowing the challenged claims over Wu, Oh, Sabat-425, and CPRI, all of which were cited in Information Disclosure Statements ("IDSs"). Prelim. Resp. 36; Sur-Reply 4–5. Petitioner argues that the record does not show that the Examiner evaluated the references cited in the IDSs, and that the Examiner's failure to evaluate the references, or failure to find that Wu and Oh disclosed or taught the limitations described by the Examiner as missing in the art of record, was error. Pet. 13; Reply.

Because Petitioner sufficiently demonstrates Examiner error, we decline to exercise our discretion under 35 U.S.C. § 325(d) to deny the Petition.

1. Legal Principles

Institution of inter partes review is discretionary. *Harmonic Inc. v. Avid Tech, Inc.*, 815 F.3d 1356, 1367 (Fed. Cir. 2016) (explaining that "the PTO is permitted, but never compelled, to institute an IPR proceeding"). The Patent Office may, for example, deny institution under 35 U.S.C. § 325(d), which provides, in pertinent part, that "[i]n determining whether to institute or order a proceeding under this chapter . . . the Director may take into account whether, and reject the petition or request because, the same or

substantially the same prior art or arguments previously were presented to the Office."

In evaluating whether the same or substantially the same prior art or arguments were previously presented to the Office, the Board has identified several non-exclusive factors for consideration. *Becton, Dickinson & Co. v. B. Braun Melsungen AG*, IPR2017-01586, Paper 8 at 17–18 (PTAB Dec. 15, 2017) (precedential as to § III.C.5, first paragraph) ("the *Becton, Dickinson* factors"). Those factors are as follows:

> (a) the similarities and material differences between the asserted art and the prior art involved during examination;
>
> (b) the cumulative nature of the asserted art and the prior art evaluated during examination;
>
> (c) the extent to which the asserted art was evaluated during examination, including whether the prior art was the basis for rejection;
>
> (d) the extent of the overlap between the arguments made during examination and the manner in which Petitioner relies on the prior art or Patent Owner distinguishes the prior art;
>
> (e) whether Petitioner has pointed out sufficiently how the Examiner erred in its evaluation of the asserted prior art; and
>
> (f) the extent to which additional evidence and facts presented in the Petition warrant reconsideration of the prior art or arguments.

Id.; *see also* Patent Trial and Appeal Board Consolidated Trial Practice Guide (Nov. 2019)[11] 62–63.

---

[11] Available at https://www.uspto.gov/TrialPracticeGuideConsolidated

As explained in *Advanced Bionics, LLC v. Med-El Electromedizinishe Geräte GmbH*, IPR2019-01469, Paper 6 at 8 (PTAB Feb. 13, 2020) ("*Advanced Bionics*") (precedential), we further apply the following two-step framework in determining whether discretionary denial under § 325(d) is appropriate:

> (1) whether the same or substantially the same art previously was presented to the Office or whether the same or substantially the same arguments previously were presented to the Office; and
>
> (2) if either condition of [the] first part of the framework is satisfied, whether the petitioner has demonstrated that the Office erred in a manner material to the patentability of challenged claims.

Becton, Dickinson Factors (a), (b), and (d) relate to the first step, and *Becton, Dickinson* Factors (c), (e), and (f) relate to the second step. *Id.*

Only if the same or substantially the same art or arguments were previously presented to the Office do we then consider whether petitioner has demonstrated error. *Advanced Bionics*, at 8–10. "If the petitioner fails to show that the Office erred, the Director may exercise his discretion not to institute inter partes review." *Id.* at 8–9 ("If a condition in the first part of the framework [i.e., substantially same art or arguments] is satisfied and the petitioner fails to make a showing of material error, the Director generally will exercise discretion not to institute inter partes review."). "At bottom, this [§ 325(d)] framework reflects a commitment to defer to previous Office evaluations of the evidence of record unless material error is shown." *Id.* at 9. An "example of a material error" could be "misapprehending or overlooking specific teachings of the relevant prior art where those teachings impact patentability of the challenged claims." *Id.* at 8 n.9.

2. Analysis

Under the first step of the *Advanced Bionics* framework, we must determine whether the same or substantially the same prior art was previously presented to the Office. *Advanced Bionics*, at 8. Patent Owner observes that Wu, Oh, Sabat-426, and CPRI were before the Examiner in an Information Disclosure Statement ("IDS"). Prelim Resp. 30; Sur-Reply 2; Ex. 1002, 548–554 (May 12, 2017 IDS, *see* p. 550–551, Cite Nos. 27, 38, 40, 55).

Wu and Oh are described by Petitioner as its "[p]rimary [r]eferences" in this IPR. Pet. 5–11; *see also* Prelim. Resp. 30. Petitioner concedes that "[s]ome of the references, including Wu and Oh" were before the Examiner. Reply 1. Petitioner, however, asserts that there was no discussion or mention of Wu and Oh on the record by the Examiner or applicant, and "no evidence the [E]xaminer *evaluated* the specific features of the references as identified and applied in the petition." *Id.*

In summary, the parties do not dispute that Wu, Oh, Sabat-426, and CPRI were before the Examiner in the IDS. Prelim. Resp. 30; Reply 1; Sur-Reply 2. Thus, these references were "previously presented to the Office." *See Advanced Bionics*, at 7–8 ("Previously presented art includes . . . art provided to the Office by an applicant, such as on an Information Disclosure Statement (IDS), in the prosecution history of the challenged patent."). Because Wu and Oh, along with Sabat-426 and CPRI, were previously presented to the Office, we proceed to the second step of the *Advanced Bionics* framework.

Under the second step of the *Advanced Bionics* framework, we must determine whether Petitioner has demonstrated Examiner error in a manner

material to the patentability of the challenged claims. *Advanced Bionics*, at 10. *Becton, Dickinson* Factors (c), (e), and (f) inform our analysis at this step. *Id.* at 8.

As to *Becton, Dickinson* Factor (c), the extent to which the asserted art was evaluated during examination, including whether the prior art was the basis for rejection, the record is not sufficiently clear that the Examiner meaningfully considered the relevant disclosures of the asserted prior art references in the Petition or substantially similar references. Whether the prior art was the basis for a rejection is significant to this analysis. *Compare Boragen, Inc. v. Syngenta Participations AG*, IPR2020-00124, Paper 16 at 7–8 (PTAB May 5, 2020) (denying institution under § 325(d) where the primary reference and a secondary reference in the petition were the basis for five obviousness rejections during the prosecution of the patent at issue), *with DraftKings Inc. v. Interactive Games LLC*, IPR2020-01107, Paper 10 at 16 (PTAB Jan. 6, 2021) (declining to deny institution under § 325(d) where the primary reference in the petition was not the basis of a rejection and disclosed the limitations upon which the Examiner relied to allow the patent).

Here, Petitioner asserts that Wu and Oh were not substantively evaluated by the Examiner during prosecution of the '178 patent. Pet. 13; Reply 1. Moreover, Petitioner argues that Examiner error is "evident in the reasons for allowance, where the examiner concludes none of the references discloses a host unit configurable to change the number of channel signals it sends to a remote unit." Reply 3–4. Because, Petitioner argues, Wu and Oh disclose systems with this type of host unit, the Examiner's conclusion was clear error. *Id.* at 4–5.

Patent Owner argues that evaluation by the Examiner is shown in the Examiner's statement in an office action that he considered the IDS on which Wu and Oh were listed. Prelim. Resp. 30; Sur-Reply 2 (reproducing an annotated portion of Ex. 2002, 500); *see* Ex. 2002, 498–516 (June 5, 2017 Office Action). Patent Owner additionally argues that evaluation is further shown in the Examiner's statement in the Notice of Allowance that "no prior art reference" or "combination of prior art references" discloses or suggests the configurability of the host to change the set and number of downlink channel signals sent to a remote unit at different points in time. Prelim. Resp. 31, 35; Sur-Reply 2 (reproducing in part Ex. 2002, 88); *see* Ex. 2002, 81–89 (Notice of Allowance). Patent Owner argues that Wu and Oh are similar to the art identified by the Examiner as the "closest prior art on record." Sur-Reply at 2–3.

Furthermore, Patent Owner argues that "to ensure patentability, Patent Owner even filed an RCE [Request for Continued Examination] to remove the '178 patent from allowance, and conducted multiple telephone interviews with the Examiner to discuss the prior art" and indicates that it submitted in an IDS both a petition for *inter partes* review of US 9,531,473 B2 ("the '473 patent)[12,13] and the expert declaration of Dr. Acampora relied

---

[12] The '473 patent, while also owned by Patent Owner, is not related to the '178 patent; however certain claims bear some similarity to claims of the '178 patent. Prelim. Resp. 11 (co-ownership); Ex. 1003, 15–19 (chart illustrating similarities between claims).

[13] The referenced petition for *inter partes* review of the '473 patent ("the IPR2018-00571 Petition") resulted in institution of *inter partes* review, and, eventually in a final written decision, which has been vacated and remanded in view of *Arthrex, Inc. v. Smith & Nephew, Inc.*, 941 F.3d 1320 (Fed. Cir. 2019) with further proceedings held in administrative abeyance pending

upon in that petition, each discussing Oh and Wu. Prelim. Resp. 11, 35; Ex. 2002, 127–131 ("May 1, 2018 IDS"). Patent Owner represents that "on May 7, 2018, Patent Owner had a telephone conference with the Examiner to specifically discuss the [May 1, 2018 IDS] to ensure that the claims of the '178 patent were patentable in view of the [IPR2018-00]571 petition." Prelim. Resp. 11 (citing Ex. 2002, 69, 107–108).

While Patent Owner now characterizes the purpose of the RCE as being filed to provide additional prior art, we note that the RCE added ten claims and identified the purpose of the amendment as "secur[ing] an appropriate scope of protection." Ex. 2002, 118. The RCE additionally "urged" entry of the amendment noting that "no more than a cursory review of the record is needed." *Id.* The Examiner's interview summary of the May 7, 2018 interview does not contain any indication that Oh, Wu, the IPR2018-00571 petition, or the expert declaration were discussed. Ex. 2002, 108 (describing the substance of the interview as relating to new claim limitations in two claims and date information needed regarding a different item on the May 1, 2018 IDS).

Under this factor, the record is not sufficiently clear as to the extent the relevant disclosures of the asserted prior art was meaningfully considered during examination. Although the IDS indicates that Wu and Oh were considered as noted above, Petitioner provides persuasive argument

---

Supreme Court review of the *Arthrex* decision. *CommScope Technologies LLC v. Dali Wireless Inc.*, IPR2018-00571, Paper 1 (Petition, filed Feb. 2, 2018), Paper 26 (PTAB Aug. 14, 2018) (Institution Decision), Paper 53 (PTAB Aug. 12, 2019) (Final Written Decision), Paper 59 (PTAB May 4, 2020) (General Order in Cases Remanded Under *Arthrex, Inc. v. Smith & Nephew, Inc.*, 941 F.3d 1320 (Fed. Cir. 2019)).

indicating that the Examiner overlooked or did not appreciate the materiality of the teachings of Wu and Oh in relation to the allowed claims. Additionally, the obvious materiality of Wu and Oh, discussed *infra*, and the absence of their use as a basis for rejection, suggests that the Examiner misapprehended or overlooked the relevant disclosures of these references.

As to *Becton, Dickinson* Factor (e), whether Petitioner has pointed out sufficiently how the Examiner erred in its evaluation of the asserted prior art, Petitioner provides persuasive evidence of Examiner error. The Examiner allowed the claims of the '178 patent because of limitations relating to the configurability of the host that Petitioner argues are disclosed by Wu and Oh in several grounds in the Petition. Reply 4 (citing Ex. 1005 ¶ 46; Ex. 1023 9:44–10:9, 14:16–17). Patent Owner acknowledges that this feature was cited in the reasons for allowance. Prelim. Resp. 31, 35; Sur-Reply 2. Patent Owner further argues (as addressed further below, Section II.E) that Wu does not anticipate the host unit as described in the claims. Sur-Reply 5. However, the Petition relies not only on anticipation by Wu but obviousness over Wu, alone or in combination with other art. *See* Pet. 41–49.

Given the fact that the Examiner did not expressly rely on Wu and Oh in rejecting the claims during prosecution or in the Examiner's explanation of the reasons for allowance, and given the description and explanation provided by Wu and Oh as discussed *infra*, we find that the Examiner erred by either overlooking, or failing to appreciate, the materiality of the disclosures of Wu and Oh.

Finally, as to *Becton, Dickinson* Factor (f), the extent to which additional evidence and facts presented in the Petition warrant reconsideration of prior art or arguments, Petitioner addresses the asserted

references in detail as discussed in our analysis below, II.E–J. Petitioner argues that the final decision issued in IPR2018-00571 is evidence that the claims merit reconsideration. Reply 5. Patent Owner notes that this decision has been vacated (pursuant to *Arthrex*). *See* Sur-Reply 5; *supra* notes 13, 14.

Considering *Becton, Dickinson* Factors (c), (e), and (f) together, we conclude that Petitioner sufficiently demonstrates Examiner error based on the grounds in its Petition, with support from expert testimony, which shows, in particular, that the Examiner overlooked, or did not appreciate, the materiality of Wu's and Oh's disclosures relating to the configurability of the host unit.

3. Conclusion

For the reasons discussed above, we conclude that the Petition presents facts and evidence that, in this case, sufficiently demonstrate the Examiner erred in a manner material to the patentability of the challenged claims, and we therefore decline to exercise our discretion to deny institution under 35 U.S.C. § 325(d).

B. Principles of Law

It is a petitioner's burden to demonstrate unpatentability in an *inter partes* review. *See Dynamic Drinkware, LLC v. Nat'l Graphics, Inc.*, 800 F.3d 1375, 1378 (Fed. Cir. 2015) (citing *Tech. Licensing Corp. v. Videotek, Inc.*, 545 F.3d 1316, 1326–27 (Fed. Cir. 2008)).

To anticipate a claim, a prior art reference must disclose every limitation of the claimed invention, either expressly or inherently. *Blue Calypso, LLC v. Groupon, Inc.*, 815 F.3d 1331, 1341 (Fed. Cir. 2016).

However, this is not an *ipsissimis verbis* test, i.e., identity of terminology is not required. *In re Bond*, 910 F.2d 831, 832 (Fed. Cir. 1990).

A patent claim is unpatentable under 35 U.S.C. § 103(a) if the differences between the claimed subject matter and the prior art are "such that the subject matter as a whole would have been obvious at the time the invention was made to a person having ordinary skill in the art to which said subject matter pertains." *KSR Int'l Co. v. Teleflex Inc.*, 550 U.S. 398, 406 (2007). The question of obviousness is resolved based on the following underlying factual determinations: (1) the scope and content of the prior art; (2) any differences between the claimed subject matter and the prior art; (3) the level of skill in the art; and (4) objective evidence of nonobviousness, i.e., secondary considerations.[14] *Graham v. John Deere Co.*, 383 U.S. 1, 17–18 (1966). "To satisfy its burden of proving obviousness, a petitioner cannot employ mere conclusory statements. The petitioner must instead articulate specific reasoning, based on evidence of record, to support the legal conclusion of obviousness." *In re Magnum Oil Tools Int'l, Ltd.*, 829 F.3d 1364, 1380 (Fed. Cir. 2016). We analyze the asserted grounds with the principles stated above in mind.

C. Level of Ordinary Skill in the Art

Petitioner asserts that the proper level of ordinary skill in the art is a "bachelor's degree in electrical engineering (or equivalent field) with 2-3 years of work experience in wireless communications." Pet. 16 (citing Ex. 1003 ¶¶ 19–21). Patent Owner contends that the proper level of skill given

[14] At this stage, the record contains no allegations or evidence of secondary considerations.

by the Petitioner should include "work experience dealing with wireless devices such as remote units and antennas." Prelim. Resp. 22. Based on the evidence of record at this point, including the types of problems and solutions described in the '178 patent and the asserted prior art, at this stage we agree with and adopt Patent Owner's definition of the level of ordinary skill in the art, although our findings and conclusions would be the same if we applied Petitioner's somewhat broader proposed definition.

D. Claim Construction

In an *inter partes* review, the Board construes each claim "in accordance with the ordinary and customary meaning of such claim as understood by one of ordinary skill in the art and the prosecution history pertaining to the patent." 37 C.F.R. § 42.100(b). Under the same standard applied by district courts, claim terms take their plain and ordinary meaning as would have been understood by a person of ordinary skill in the art at the time of the invention and in the context of the entire patent disclosure. *Phillips v. AWH Corp.*, 415 F.3d 1303, 1313 (Fed. Cir. 2005) (en banc). "There are only two exceptions to this general rule: 1) when a patentee sets out a definition and acts as . . . lexicographer, or 2) when the patentee disavows the full scope of a claim term either in the specification or during prosecution." *Thorner v. Sony Comput. Entm't Am. LLC*, 669 F.3d 1362, 1365 (Fed. Cir. 2012).

Petitioner requests that we construe the term "host unit" found in all independent claims, and the term "dynamically change(s)" found in claims 2–6 and 16–18. Pet. 15. Patent Owner provides a discussion and an alternate proposal for each term. Prelim. Resp. 22–28.

1. "host unit"

Petitioner contends that "host unit" should be construed as "unit that transports and controls communications between remote units and the signal source." Pet. 15 (citing Ex. 1003 ¶ 30). Patent Owner disagrees with Petitioner's construction and instead contends that the proper construction is "a digital access unit that manages communications between an operator network and one or more remote radio units." *See* Prelim. Resp. 23–25.

Our decision with respect to the prior art's disclosures or teachings with respect to "host unit" would not be affected by the claim construction of this term. In view of our analysis below, we do not see a need for construction of this term for the purposes of institution. *See Nidec Motor Corp. v. Zhongshan Broad Ocean Motor Co.*, 868 F.3d 1013, 1017 (Fed. Cir. 2017) ("[W]e need only construe terms 'that are in controversy, and only to the extent necessary to resolve the controversy'. . . ." (quoting *Vivid Techs., Inc. v. Am. Sci. & Eng'g, Inc.*, 200 F.3d 795, 803 (Fed. Cir. 1999))).

2. "dynamically change" or "dynamically changes"

With respect to "dynamically change" or "dynamically changes," as found, for example, in claim 2 ("wherein the host unit is configurable to dynamically change" from sending the representations of the first set of downlink channel signals to sending representations of the second set) it is Petitioner proposes "automatically change" or "change instantly in response to conditions as they occur." Pet. 15–16 (citing Ex. 1003 ¶¶ 26–29). Patent Owner addresses and objects to each proposed construction. Patent Owner disagrees with either construction and instead proposes that "dynamically change" should be construed as "adaptively change." *See* Prelim. Resp. 26–28.

Our decision with respect to the prior art's disclosures or teachings with respect to "dynamically change[s]" would not be affected by the claim construction of this term. Therefore, we do not see a need for construction of this term for the purposes of institution. *See Nidec Motor Corp.*, 868 F.3d at 1017.

E. Asserted Anticipation Based on Wu, Claims 1–25

Petitioner asserts claims 1–25 are anticipated by Wu. Pet. 16–41. Patent Owner addresses these assertions in its Preliminary Response. Prelim. Resp. 21, 54–59.

1. Overview of Wu

Wu is titled "Carrier Channel Distribution System" and describes a system where signals are communicated between base transceiver stations (BTSs) and remote transceiver units (RTUs), providing fine-grained control for this communication, splitting carrier channels and routing only some channels to RTUs according to a routing policy. Ex. 1005, codes (54), (57), ¶¶ 9, 11, 38–44. A BTS receives signals within a plurality of frequency bands, each of which may comprise multiple channels. *Id.* ¶¶ 11, 35, 37, 38. Figure 2 of Wu, reproduced below, is a schematic of a base transceiver station and associated host units.

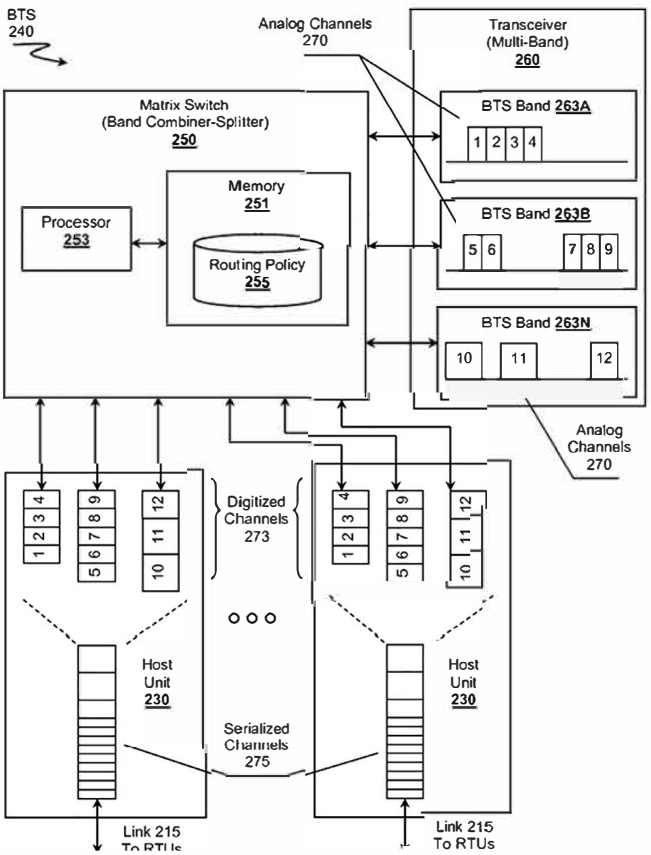

Figure 2

Figure 2 shows base transceiver station (BTS) 240 including transceiver 260, matrix switch 250, and host units 230. *Id.* ¶¶ 15, 34–36. Transceiver 260 receives signals on BTS bands 263A through 263N, and each may include multiple channels 270, e.g., channels 270 labelled 5 through 9 in BTS band 263B. *Id.* ¶¶ 35, 37. Transceiver 260 forwards the received channels 270 to matrix switch 250 that routes them according to Routing Policy 255 to host unit 230, which further distributes them to RTUs over links 215. *Id.* ¶ 38. The system is bi-directional, and carrier channel signals are received by host units 230 from RTUs and forwarded to

transceiver 260 for transmission within bands 263. *Id.* ¶¶ 36, 49. Wu also discloses that some signals may be received at an RTU with another RTU acting as intermediary. *Id.* at Figs. 1, 4, ¶¶ 33, 51.

Policy 255 can be reconfigured in order to change the routing of channels to the various RTUs. *Id.* ¶¶ 48, 49. Channels may be routed, allocated, or distributed, for example, based on anticipated requirements of areas at a certain time of day, or on current traffic load. *Id.* ¶¶ 43, 44. Transmissions between host units and RTUs are disclosed as preferably occurring according to the CPRI Standard. *Id.* ¶¶ 31, 49.

2. Analysis of Anticipation of Claims 10 and 15 by Wu

Petitioner argues that Wu discloses claim 10's "system for transporting wireless communications" in its "better carrier channel transport system." Pet. 19 (quoting Ex. 1005 ¶ 2, 9, citing Ex. 1003 ¶ 38).

With respect to limitation B of claim 10, Petitioner argues that the host unit is disclosed by the combination of matrix switch 250 and units 130 and 230 in Wu. *Id.* at 18, 20 (citing Ex. 1005, Fig. 2 (elements 250, 230); Ex. 1003 ¶ 39). Petitioner argues that the "signal source" of limitations D1 and E is disclosed by Wu's transceiver 260. Id. *at* 20 (citing Ex. 1005, Fig. 2 (element 260); Ex. 1003 ¶ 40). To explain these disclosures, Petitioner presents an annotated version of Wu's Figure 2, reproduced below.

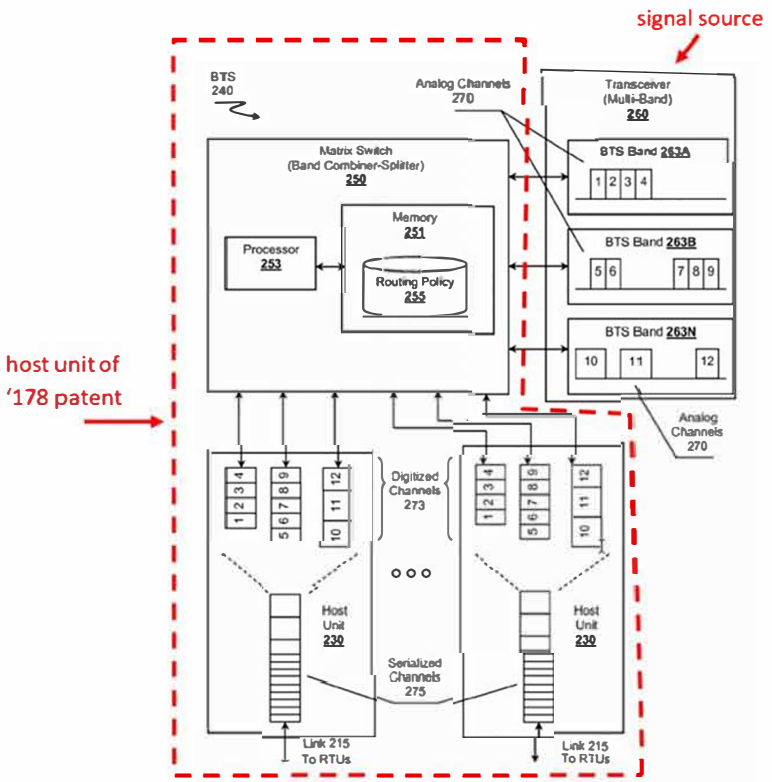

Figure 2

Id. at 18. Figure 2, as annotated by Petitioner, shows a dotted red box enclosing Wu's matrix switch 250 and Wu's host units 230, which Petitioner labels as the host unit. *Id.* Petitioner argues that Wu discloses elements D1 ("wherein the host unit comprises at least one interface to communicatively couple the host unit to at least one signal source") and E ("the host unit is configured to receive a plurality of downlink channel signals from the at least one signal source") through its disclosure that matrix switch 250 communicates with transceiver 260 and receives from transceiver 260 a plurality of downlink channel signals. *Id.* at 22 (citing Ex. 1005, ¶ 38, Fig. 2 (elements 260, 263A, 263B, 263N); Ex. 1003 ¶¶ 42–43).

Petitioner argues that the plurality of remote units of limitation C is disclosed in Wu's remote transceiver units. *Id.* at 21 (citing Ex. 1005, ¶¶ 11, 30, 33, Fig. 1; Ex. 1003 ¶ 41). With respect to the requirements of the claim that the claimed host unit be configured/configurable to send digital representations of the plurality of downlink channel signals to remote transceiver units (limitation E, also limitations F, G, and H), Petitioner contends that Wu discloses this in Wu's discussion of the combination of matrix switch 250 and Wu's host units 230 to provide "fine grained control" in sending send digital representations of signals received from the transceiver 260 "individually or in arbitrary groups" to the remote transceiver units. *Id.* at 22–23 (citing Ex. 1005, ¶¶ 9, 11, 38, 39, 47, 49; Ex. 1003 ¶¶ 44–49).

Petitioner further argues that the other requirements of limitations G and H, and the requirements of limitation I are disclosed in Wu's description of its matrix switch, which provides control over individual carrier channels by routing them, according to a routing policy, including routing channels individually, collectively or "in arbitrary groups" to remote transceiver units for transmission. *Id.* at 22–24 (citing Ex. 1005 ¶¶ 9, 11, 30, 38–47, 49, 54; Ex. 1003 ¶¶ 44–51, 56). Petitioner addresses the host unit's configurability to transmit a first subset of a plurality of downlink signals to a first remote unit and a second subset to a second remote unit (limitations G and H) by referencing Wu's description of changing the number of channels by means of a routing policy that reacts to events and conditions to provide "proper coverage." *Id.* at 23–24 (citing Ex. 1005 ¶¶ 4, 30, 38–47, 49; Ex. 1003 ¶¶ 51, 53). Petitioner cites Wu's specific disclosure of "allocat[ing] more channels" "to increase the bandwidth available" as disclosing limitation I,

which (together with limitations G and H) requires that the number of downlink channel signals sent to a first remote unit is different at a first and second point in time. *Id.* at 24 (citing Ex. 1005 ¶ 46; Ex. 1003 ¶ 54). Petitioner further argues that the transmissions are "for transmission at an antenna" of the remote units (as required by limitations G and H) because Wu discusses the remote transceiver units providing "wireless coverage," which one of ordinary skill would have understood to be provided via the antennas of the remote transceiver units. *Id.* at 24 (citing Ex. 1005 ¶¶ 4, 30; Ex. 1003 ¶ 52).

Lastly, with respect to limitation J of claim 10, Petitioner argues that Wu discloses bi-directional digital communication between the remote transceiver units and Wu's host unit 230. *Id.* at 25 (citing Ex. 1005, Fig. 7-2 (RTU "ADC" elements), ¶ 56 (for uplink, the RTU "mirrors" functionality of unit 230 in downlink)). Petitioner explains how this and related disclosures describe the capability of Wu's host unit to receive at least one uplink signal, thereby disclosing the ability of the host unit (Wu's host unit and matrix switch) to receive digital signals from remote transceiver units. *Id.* (citing Ex. 1005 ¶¶ 36, 49).

Patent Owner argues that Petitioner's grounds based in whole or in part on Wu, excepting the obviousness ground over the combination of Oh and Wu, are flawed because they rely on "an improper box-drawing exercise." Prelim Resp. 38. Patent Owner contends that Petitioner's reliance on "*Wu*'s base station transceiver (BTS) 240 with host units 230," is an improper "combination of disparate components from different units" and "conflicts with both the '178 patent's plain language and [with] settled case law." *Id.* at 38 (citing Pet. 18, 20). Patent Owner argues that "Petitioner's

reliance on the BTS 240 meeting both the 'host unit' and 'signal source' elements is unreasonable and should be rejected." *Id.* at 39.

As discussed above, Petitioner argues that the claimed host unit is disclosed by the described combination of Wu's host units 230 and matrix switch 250. *See* Pet. 18–20. Patent Owner contends that matrix switch 250 is disclosed as part of base transceiver station 240, but that host units 230 are not disclosed as part of base transceiver station 240. Prelim. Resp. 38–40 ("Host units 230 are arranged separately from BTS 240 and do not include a matrix switch 250"). On the current record, we disagree. First, Figure 2's element label 240 appears to apply to all included elements of Figure 2, this is confirmed by the description of the figure in the written portion of the Wu's specification. Ex. 1005, ¶ 15 ("FIG. 2 is a schematic of a possible base transceiver station (BTS) having a matrix switch *and host units*." (emphasis added), Fig. 2; *see also id.* ¶¶ 17, 51, Fig. 4 (depicting host units 430 within base transceiver station 440); *but see id.* Fig. 1 (depicting host units 130 as separate but abutting base transceiver station 140).

Patent Owner cites *Net MoneyIN, Inc. v. VeriSign, Inc.*, 545 F.3d 1359, 1371 (Fed. Cir. 2008), arguing that the differences Patent Owner asserts exist between Wu's disclosure and the claim means the anticipation ground must fail. *Id.* at 39–40. However, *Net MoneyIN* dealt with a situation in which the prior art reference disclosed "two separate protocols," neither of which included all the claimed elements, but not the combination of those two protocols in one system. *Net MoneyIn*, 545 F.3d at 1371. In that situation *Net MoneyIn* guides us that obviousness is invoked, not anticipation. *Id.* Here, the host units 230 and matrix switch 250 are not

distinct embodiments that cannot be combined in an anticipation ground, rather they work in concert as described in Wu.

After considering Petitioner's arguments, we determine that, given the arrangements of the elements in Wu, Petitioner has a sufficient likelihood of succeeding in showing that Wu's host units 230 with its matrix switch 250 discloses the claimed "host unit" and that Wu's transceiver 260 discloses a signal source. All of Patent Owner's arguments with respect to Petitioner's argument that Wu anticipates claim 10 rely on discussing the capabilities of Wu's host units 230, as opposed to the capabilities of the host units 230 and the matrix switch 250 and are thus not persuasive at this stage of the proceeding. *See* Prelim. Resp. 40–44 (arguing that, because host units 230 are "pass-through" devices, they are not configurable to send different sets of signals at different times), 44–47 (arguing that each Wu host unit relays the same signals to all remote transceiver units connected to it, and therefore cannot send different sets of downlink channel signals to one remote transceiver unit); 47 (arguing that matrix switch 250 in Wu, rather than Wu's host units, is used to allocate the channels sent to different remote transceiver units).

Petitioner refers to its arguments with respect to claim 10 in arguing that Wu anticipates claim 15. Pet. 26–27. Patent Owner does not present separate arguments regarding claim 15.

On this record and taking into account Patent Owner's arguments, Petitioner has shown a reasonable likelihood of demonstrating that claims 10 and 15 are anticipated by Wu.

3. Analysis of Anticipation of Claim 1 By Wu

With respect to each limitation of claim 1, aside from the limitation that the host unit comprises "at least one interface to communicatively couple the host unit to a plurality of remote units, including at least a first remote unit," Petitioner argues that claim 1 is anticipated by Wu for the same reasons given with respect to claim 10, and discussed above. Pet. 26. Petitioner argues that the limitation regarding communicatively coupling the host unit to a plurality of remote units is taught or suggested by the optical interfaces of Wu's host units 230 through which a host unit communicates with remote transceiver units, including, in some exemplary illustrations, to multiple remote transceiver units. *Id.* (citing Ex. 1005 ¶¶ 30, 49–51, Figs. 1, 4; Ex. 1003 ¶¶ 60–61).

Patent Owner does not separately address this argument with respect to claim 1. On this record and taking into account Patent Owner's prior arguments, Petitioner has shown a reasonable likelihood of demonstrating that claim 1 is anticipated by Wu.

4. Analysis of Anticipation of Claim 21 By Wu

With respect to each limitation of claim 21, for all but the last two limitations Petitioner argues that claim 1 is anticipated by Wu for the same or substantially the same reasons given with respect to claim 10, and discussed above. Pet. 35–36.

With respect to the limitation of claim 21 that "the host unit is configured to send a digital representation of any carrier of any downlink signal it receives to any of the plurality of remote units" and that the first and second portion of the plurality of carriers are different (the term labeled "element O" and part of the term labeled "element Q" by Petitioner),

Petitioner argues that Wu's matrix switch operates to route carrier channels individually, and that examples provided in Wu illustrate Wu's capability to provide "fine grained" control over the individual channel signals alone or in arbitrary groups. *Id.* at 36–37.

With respect to the balance of "element Q" of claim 21, which requires that the digital representations of the first and second portions of the plurality of carriers include destination information, Petitioner argues that

> Wu discloses that units 230 use either the CPRI or OBSAI protocols for communicating the digitized carrier channels to the RTUs. As discussed above, both of these standards employ destination addresses for routing signals. The OBSAI standard, for example utilizes a 19 byte message format for communicating with remote RRUs. The first 13 bits of the message defines an address, which includes a node address that identifies a particular RRU (8 bits) and even includes a more specific sub-node address (5 bits) for identifying a particular module within the node. Ex. 1003 ¶130, ¶¶95-98, ¶99, ¶102-107, ¶115-118. The CPRI protocol also discloses the use of destination addresses for more complex networked topologies. Ex. 1003 ¶130, ¶¶82-83, ¶¶87-88; Ex. 1006 at p. 84 (6.3.2. and 6.3.3).

Id. at 38; *see also id.* at 30–31 (describing the teachings of CPRI (Ex. 1006), OBSAI RP3 (Ex. 1007), and OBSAI BTS (Ex. 1008) relating to destination addresses).

With respect to claim 21, in addition to the arguments previously discussed with respect to claims 1, 10, and 15, Patent Owner argues that "[r]ather than pointing to any such teaching in *Wu*, Petitioner cites to the secondary references . . . *CPRI* and *OBSAI*." Prelim. Resp. 48. Petitioner argues that this "incorporation" of CPRI and OBSAI does not support anticipation. *Id.* (citing *Net MoneyIN*, 545 F.3d at 1371). However, on the present record, and for the purposes of institution, we determine that

Petitioner properly employs the CPRI, OBSAI RP3, and OBSAI BTS references as extrinsic evidence of the properties of the CPRI and OBSAI standards specifically referenced in Wu. *See In re Baxter Travenol Labs*, 952 F.2d 388, 390 (Fed. Cir. 1991) (extrinsic evidence may be used to explain what a reference discloses). For this reason, and for the reasons described with reference to claims 1, 10, and 15, on this record and taking into account Patent Owner's prior arguments, Petitioner has shown a reasonable likelihood of demonstrating that claim 21 is anticipated by Wu.

5. Analysis of Anticipation of Claims 2–9, 11–14, 16–20, and 22–25 by Wu

Petitioner also presents a sufficient showing supported by the record with respect to anticipation by Wu of dependent claims 2–9, 11–14, 16–20, and 22–25. *See* Pet. 27–34, 39–41. With respect to these claims and anticipation over Wu, Patent Owner's arguments are addressed above. *See* Prelim. Resp. 38–49.

For the reasons described with reference to claims 1, 10, 15, and 21, on this record and taking into account Patent Owner's prior arguments, Petitioner has shown a reasonable likelihood of demonstrating that claims 2–9, 11–14, 16–20, and 22–25 are anticipated by Wu.

F. Asserted Obviousness Based on Wu or on Wu and Sabat-426, Claims 1–25

Petitioner also asserts claims 1–25 are obvious over Wu alone, or over a combination of Wu and Sabat-426. Pet. 41–42.

1. Overview of Sabat-426

Sabat-426 is titled "Digital Distributed Antenna System" and describes a system that distributes the capacity of a digital base station to solve coverage and capacity requirements. Ex. 1008, codes (54), (57).

Sabat-426 describes a DAS network that distributes downlink signals from a base station to digital distributed radio (DDR) units via a DDR hub. *Id.* ¶¶ 25, 30, 31, 33, 34.

Figure 6 of Sabat-426 is reproduced immediately below:

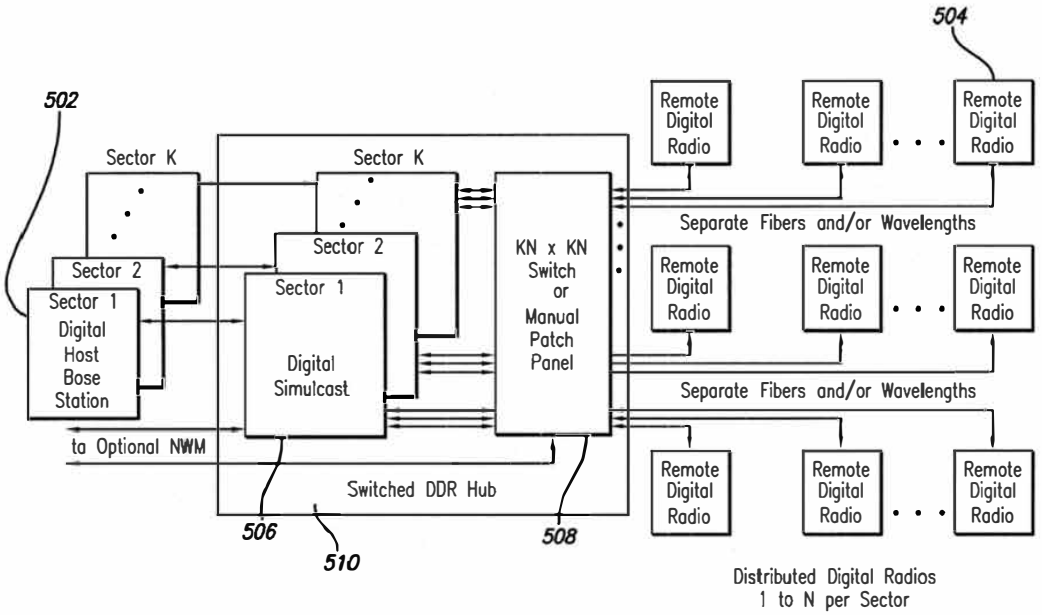

FIG. 6

Figure 6 is a block schematic drawing including a DDR hub, which includes a digital switch to provide capacity reallocation capability to the network. *Id.* ¶ 28. Figure 6 shows base station sectors 502 for sectors 1 through K, transmitting via DDR hub 510 to DDR units 504. *Id.* ¶¶ 27, 28, 43–46.

2. *Analysis of Obviousness of Claims 1–25 over Wu or Wu and Sabat-426*

For obviousness of claims 1–25 over Wu, or over Wu and Sabat-426, Petitioner relies mainly on its arguments with respect to anticipation over Wu, but anticipating Patent Owner's arguments that Wu's matrix switch 250

and host unit 230 would not properly disclose a host unit, Petitioner argues that it would be obvious to one of ordinary skill in the art to "place the functionality" of these units "within a single housing or unit." *Id.* at 41–42 (citing Ex. 1003 ¶ 139). Petitioner additionally argues that Sabat-426 teaches the combination of a programmable switch to allocate capacity to remote antenna units and digital interfaces to those units. *Id.* at 42 (citing Ex. 1010 ¶¶ 31, 32, 37, 46, 47, Fig. 6; Ex. 1003 ¶ 142). Petitioner argues that these modifications would produce a predictable result, and that one of ordinary skill would be motivated to do this to reduce various complexity, cost, and errors. *Id.* (citing Ex. 1003 ¶ 141 (motivation to place the matrix switch and host units of Wu into a single housing), 143 (motivation to combine Wu and Sabat-426)).

Patent Owner argues that Petitioner has failed to present the grounds with particularity, provides minimal analysis, and does not analyze specific claim elements or apply the combination to specific claims. Prelim. Resp. 50. We disagree. Petitioner begins this section of the Petition with the sentence "Patent Owner may argue Wu's matrix switch 250 and units 230 do not form a host 'unit' because they are shown in Figure 2 in different 'boxes.'" Pet. 41. While Patent Owner is correct that our rules require presentation of the grounds with particularity, it is not ambiguous that Petitioner is relying, for the majority of its obviousness analysis, on the arguments with respect to anticipation by Wu, with the exception of the question of whether Wu teaches a host unit in its matrix switch and host units. On the present record, we agree that one of ordinary skill would combine two elements from Wu as a host unit. *See In re Larson*, 340 F.2d 965, 968 (CCPA 1965) ("[U]se of a one piece construction instead of the

structure disclosed in [the prior art] would be merely a matter of obvious engineering choice.").

On the present record and for the purposes of institution, we determine that Petitioner has shown a reasonable likelihood of demonstrating that claims 1–25 are obvious over Wu, or over a combination of Wu and Sabat-426.

G. Asserted Obviousness Based on Wu and "the OBSAI Standard"

Petitioner also asserts claims 8, 11, 19, 21, and 23–25 are obvious over a combination of Wu and "the OBSAI standard." Pet. 43.

Petitioner argues that Wu teaches use of the OBSAI protocol, and that claims 8, 11, 19, 21, and 23–25 are obvious over "Wu plus the OBSAI standard." *Id.*

With respect to this ground, we note that "the OBSAI standard" appears to refer to two documents, OBSAI RP3 (Ex. 1007) and OBSAI BTS (Ex. 1008). Petitioner uses these documents in asserting anticipation by Wu, as previously addressed. *See supra* § II.E.4. Petitioner defines these two documents as the "OBSAI Standard" and states that "[t]he OBSAI Standard (Exs. 1007, 1008) is a well-known open publication publicly available more than one year prior to the '178 patent and therefore, constitute [sic] 102(b) prior art." Pet. 13. Petitioner treats these two documents as one piece of prior art, but does not provide any indication of why, of what the relationship of the two documents is, or of whether they would be combined. As Patent Owner asserts (Prelim. Resp. 51), Petitioner's ground of obviousness over Wu and "the OBSAI Standard" is not asserted with sufficient particularity to explain the proposed combination.

H. Asserted Obviousness Based on Wu and CPRI

Petitioner asserts claims 8, 9, 11, and 19–25 are obvious over a combination of Wu and CPRI. Pet. 43–44.

Petitioner argues that Wu teaches use of the CPRI protocol. *Id.* (citing Ex. 1005 ¶¶ 31, 49, 50; Ex. 1003 ¶ 145). Petitioner references earlier discussions regarding CPRI's teachings regarding packetizing and addressing. *Id.* at 43 ("[A]s addressed above . . . ."); *see id.* 29–30 (citing Ex. 1006, 84; Ex. 1003 ¶¶ 72–92), 39–41 (citing Ex. 1006, 6, 30, 32, 40, 42, 84, Figs. 7, 13E, 14, 15, 16; Ex. 1003 ¶¶ 135, 138).

Patent Owner argues that "Petitioner is . . . silent as to how to apply this combination to the challenged claims." Prelim. Resp. 52. However, it is apparent that Petitioner refers to its earlier analysis for all aspects except the ones specifically pointed out in the first sentence of this ground. Pet. 43 ("These claims [8, 9, 11, 19–25] recite that the host unit is configured either to packetize the downlink signals being sent to the remote units (claims 8-9, 11, 19, 20, 22), or that the host unit includes destination information with the downlink signals (claims 21-25)"). CPRI (Ex. 1006) is a single document that appears, on the present record, to correspond to the CPRI standard discussed in Wu.

On the present record and for the purposes of institution, we determine that Petitioner has shown a reasonable likelihood of demonstrating that claims 8, 9, 11, and 19–25 are obvious over a combination of Wu and CPRI.

I. Asserted Obviousness Based on Wu and Sabat-552, Claims 26–30

Petitioner asserts claims 26–30 are obvious over a combination of Wu and Sabat-552. Pet. 44–49.

1. Overview of Sabat-552

Sabat-552 describes an open access RF signal distribution system supporting wireless voice, data, and other services. Ex. 1011, code (57), 5:6–9. The system is comprised of base stations located at hub sites, with the hubs connected via high speed fiber links to distributed RF access nodes (RANs) distributed throughout a given community, which are used to distribute RF signals and provide wireless service to end customers. *Id.* at 5:6–58, 6:1–23. In one embodiment, hubs are connected via digital cross-connects so a base station located at any hub site can transmit to any RAN. *Id.* at 6:55–59.

2. Analysis of Obviousness of Obviousness of Claims 26–30 over Wu and Sabat-552

For obviousness of claim 26 over Wu and Sabat-552, Petitioner relies for all but two elements on its arguments regarding Wu and similar limitations of claims 1, 10, and 21. Pet. 44–45. With respect to claim 26's recitation of "at least one interface to communicatively couple the host unit to one or more additional host units," (the term labeled "element W" by Petitioner) and of "the host unit [being] configured to send a digital representation of any carrier of any downlink signal it receives to the one or more additional host units" (the term labeled "element X" by Petitioner), Petitioner relies on Sabat-552. *Id.* at 45–47. Petitioner argues that these claim limitations are taught by the combination of Wu's system with Sabat-552's topology in which digital cross connects connect hubs so that a base station at any hub site can have signals transmitted to remote units (RANs) connected to another hub site. *Id.* at 45–46 (citing Ex. 1011, 6:55–61, Fig. 1; Ex. 1003 ¶ 154). Petitioner further argues that one of ordinary skill would have found it obvious to use Sabat-552's interconnections with Wu's matrix

switch and host unit 230, in order to avoid the cost of building additional base stations and distribution networks, and would enable the system to be shared among providers, reducing costs. *Id.* at 46–47 (citing Ex. 1011, 2:48–58, 3:65–4:5; Ex. 1003 ¶¶ 155–156.

In addition to arguments regarding Wu, addressed above, Patent Owner argues that Sabat-552 teaches a centralized routing policy in the disclosure that Sabat-552's Network Management System ("NMS") "distributes individual alarms to the appropriate tenants, and maintains secure transmission for each tenant, whereas each tenant 15 is provided access to only their own respective System, for monitoring and control purposes." Prelim. Resp. 54–55 (quoting Ex. 1011, 9:36–39, citing Ex. 1011, Fig. 1). Therefore, Patent Owner argues, Sabat-552 "does not suggest distributing the functionalities of a routing policy over one or more units." *Id.* at 54.

At this stage of the proceeding, Petitioner shows sufficiently that claim 26 would have been obvious over Wu and Sabat-552. Contrary to Patent Owner's arguments, Sabat-552's tenants are not hubs, but rather "the wireless carrier, Wireless Service Provider (WSP), or other business entity that desires to provide wireless service to end customers." Ex. 1011, 5:55–58. Additionally, the portion of Sabat-552 quoted by Petitioner does not indicate that control is centralized at the NMS, but explicitly states that the tenants have access to their system for control purposes. *Id.* at 9:36–39. Additionally, the host unit of claim 26 (preamble: "A host unit for use in the transport of wireless communications") is recited as containing an interface to a signal source and an interface to a plurality of remote units to which it sends different portions of downlink carrier signals received (the limitations

Patent Owner shorthands as providing "functionalities of a routing policy"). However, the interfaces and configuration of the "one or more additional host units" are not specified in claim 26, and therefore an argument that Sabat-552 does not teach a distributed routing policy, on this record, is not commensurate with the scope of the claim.

Petitioner also presents a sufficient showing supported by the record with respect to obviousness of dependent claims 27–30 over Wu and Sabat-552. *See* Pet. 47–49. With respect to these dependent claims and obviousness over Wu and Sabat-552, Patent Owner does not provide any additional argument.

For the reasons described, on this record and taking into account Patent Owner's arguments, Petitioner has shown a reasonable likelihood of demonstrating that claims 26–30 are obvious over Wu and Sabat-552.

J. Asserted Anticipation Based on Oh, Claims 1–8, 10, 11, 13, 15–19, 21, 23, 24

1. Overview of Oh

Oh is titled "Method and System for Dynamically Routing Between a Radio Access Network and Distributed Antenna System Remote Antenna Units" and describes a DAS system that includes mapping data that correlates network coverage segments (such as cell sectors) with addresses for the remote antenna units, to distribute coverage as desired throughout the DAS. Ex. 1023, codes (54), (57). Oh includes a block diagram of a communications system in its Figure 1, reproduced below.

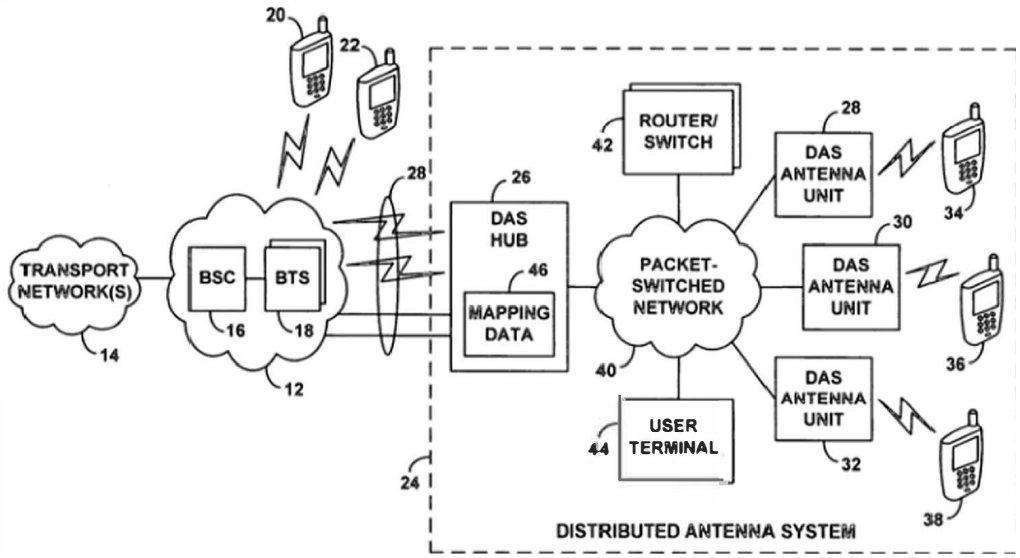

FIG. 1

Figure 1 of Oh illustrates DAS 24 that communicates with radio access network (RAN) 12, which is in RF communication with wireless devices 20 and 22. *Id.* at 4:33–46. RAN 12 defines coverage segments; each coverage segment may be a cell, cell sector, or other coverage area of RAN 12, or a particular carrier frequency or spreading code. *Id.* at 4:47–64. Each coverage segment "constitutes a mechanism in or through which the RAN communicates with client devices that it serves." *Id.* at 4:47–50.

DAS 24 extends coverage of RAN 12. *Id.* at 4:65–5:1. DAS hub 26 in DAS 24 may be connected to RAN 12 via, e.g., an antenna structure receiving signals from RAN 12, or directly via a fiber-optic cable. *Id.* at 5:1–56. DAS hub 26 stores mapping data 46, which correlates RAN coverage segments of RAN 12 with addresses of DAS antenna units 28, 30, 32. *Id.* at 7:35–47. DAS hub 26 uses the mapping data 46 to determine one or more antenna unit addresses to which it should route incoming (downlink)

traffic from RAN 12 to DAS antenna units, and which coverage segments to transmit outgoing data from DAS antenna units to RAN 12. *Id.* at 7:42–53. Packet-switched network 40 is used to communicate between DAS hub 26 and the DAS antenna units. *Id.* at 6:6–22.

2. Analysis of Asserted Anticipation by Oh

Petitioner argues that Oh discloses claim 10's "system for transporting wireless communications" through its description of its DAS. Pet. 51 (citing Ex. 1023 4:65–5:5, 5:57–64; Ex. 1003 ¶¶ 172–176). With respect to limitation B of claim 10 ("a host unit"), Petitioner argues that the host unit is disclosed by Oh's description of its DAS hub. *Id.* (citing Ex. 1023 5:1–3, 7:35–53, 8:25–31; Ex. 1003 ¶¶ 177–180). Petitioner argues that the plurality of remote units of limitation C is disclosed by Oh's description of its DAS antenna units. *Id.* (citing Ex. 1023, 5:57–6:5; Ex. 1003 ¶¶ 181–184). Petitioner argues that the "signal source" of limitations D1 and E is disclosed by Oh's RAN (which includes one or more base stations), which is connected to the DAS hub through the DAS hub's RAN interface, disclosing the interface to communicatively couple the host unit to the signal source. *Id.* at 51–53 (citing Ex. 1023, 2:50–53, 4:33–50, 8:1–11, 10:18–29, Figs. 1, 3 (elements 12, 50); Ex. 1003 ¶¶ 185–196). To explain these disclosures,

Petitioner presents an annotated version of Oh's Figure 1, reproduced below.

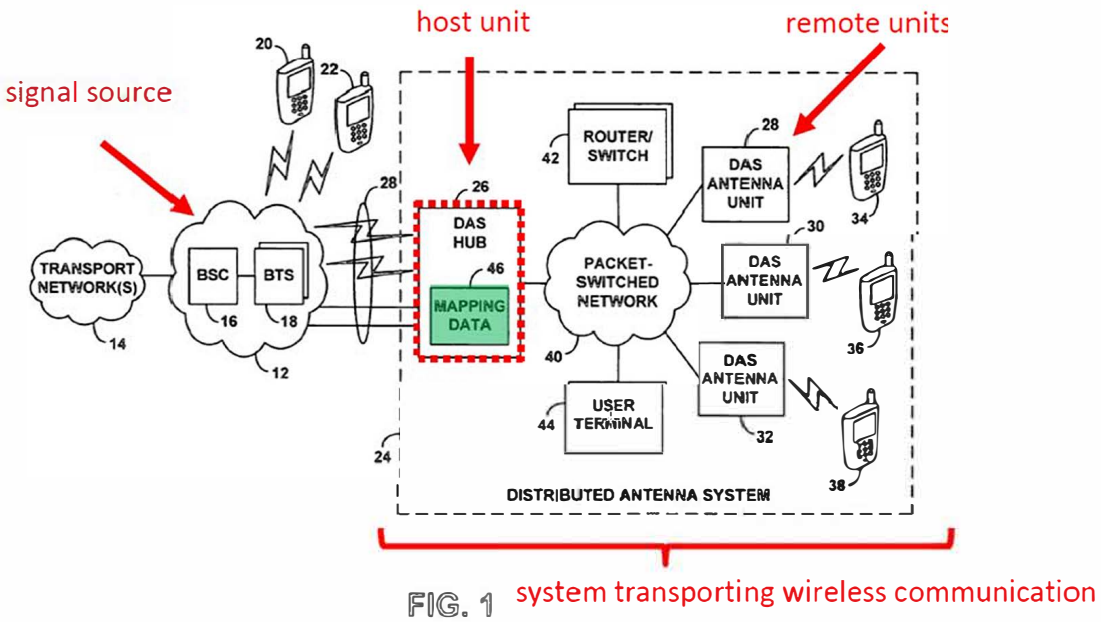

FIG. 1

Id. at 50. Figure 1, as annotated by Petitioner, shows Oh's DAS hub 26 (identified in red as the host unit), Oh's RAN 12 (identified as the signal source), and Oh's DAS antenna units 28, 30, 32 (identified as the remote units).

With respect to claim 10's "downlink channel signals" (in limitations E through H) a plurality of which are received from the signal source and digital representations of which are sent to the plurality of remote units, Petitioner argues that this is disclosed by Oh's RAN coverage segments, which Oh discloses may be a "cell or sector operating on a *respective RF frequency channel*." *Id.* at 53–54 (citing Ex. 1023, 3:2–5; 4:57–63; Ex. 1003 ¶ 195). Petitioner further argues that "Oh emphasizes [that] its system works with a variety of types and granularities of coverage segments." *Id.* at 55 (citing Ex. 1023, 2:64–3:5, 4:50–64). Petitioner argues that Oh discloses

limitation F in describing that the DAS hub sends signals from the RAN coverage segments to the DAS antenna units, and these signals are sent as IP packets. *Id.* at 56 (citing Ex. 1023, 8:6–11; Ex. 1003 ¶¶ 203–210).

Limitations G, H, and I require the host unit be configurable to send digital representations of a first set of downlink channel signals to the first remote unit at a first point in time, and to send digital representations of a second set at a second point in time, each for transmission at the antenna of the first remote unit, "wherein a number of downlink channel signals in the first set of downlink channel signals is different from a number of downlink channel signals in the second set of downlink channel signals." Ex. 1001, 15:17–30. Petitioner argues that these elements are disclosed by Oh's description of its configurable DAS hub, which includes mapping data that allows different RAN coverage segments to be mapped to different DAS antenna units for transmission via an antenna. Pet. 56–64 (citing Ex. 1023 7:35–53, 8:1–16, 8:47–9:43, Figs. 1–3; Ex. 1003 ¶¶ 211–237). Petitioner contends that Oh emphasizes that the mapping may be altered as desired "to distribute RAN coverage in a desired manner among the DAS antenna units." *Id.* at 59–60 (quoting Ex. 1023, 2:45–49, 3:26–36, 9:44–64; citing Ex. 1003 ¶¶ 238–249). Petitioner argues that Oh's discussion of adding or removing correlations in the mapping data would result in different sets of downlink channel signals being sent to the same DAS antenna units at different points in time, and that these sets can have different numbers of RAN coverage segments, and therefore a different number of downlink channel signals are sent to the DAS antenna units at different times. *Id.* at 59–64 (citing Ex. 1003 ¶¶ 242–248, 250–256.)

Lastly, Petitioner argues that Oh discloses the host unit configured to receive digital signals from each of the plurality of remote units in its disclosure that the DAS hub receives IP packets from the DAS antenna units. *Id.* at 65 (citing Ex. 1023 8:17–31; Ex. 1003 ¶¶ 257–260).

Patent Owner argues that Oh does not disclose the sending of digital representations of sets of downlink channel signals to remote units. Prelim. Resp. 56–59. Patent Owner cites Oh's disclosures that each DAS coverage segment "uses a particular carrier frequency and/or a particular spreading code." *Id.* at 57 (quoting Ex. 1023, 4:54–56). Patent Owner's argument appears to be that each of Oh's coverage segments teaches one carrier frequency and thus not "a set of downlink channel signals," as in claim 10, and that *Oh* does not, therefore, disclose dividing digital representations of downlink channel signals into two sets. *Id.* at 57–58, 59–60.

After considering Petitioner's arguments, we determine that, given the arrangements of the elements in Oh, Petitioner has a sufficient likelihood of succeeding in showing that Oh's DAS hub and mapping data discloses the claimed "host unit" and that Oh's RAN and BTSs disclose a signal source. On the current record and for the purposes of institution, we agree with Petitioner that Oh discloses sending sets of DAS coverage segments alone or in combination to DAS antenna units, and that its description of altering the correlations described by the mapping data discloses the change in number of downlink channel signals sent. *See* Pet. 61–64.

Petitioner argues claim 1 and claim 15 on substantially the same basis. On this record and taking into account Patent Owner's arguments, Petitioner has shown a reasonable likelihood of demonstrating that claims 1, 10, and 15 are anticipated by Oh.

With respect to claim 21, Petitioner relies in part on its arguments with respect to other independent claims, and additionally argues that Oh discloses "the host unit is configured to send a digital representation of any carrier of any downlink signal it receives to any of the plurality of remote units," in its description of flexible mapping in which the "DAS hub is capable of sending any carrier to any desired DAS antenna unit simply by configuring the mapping data such that the RAN coverage segment containing the desired carrier is correlated with the desired DAS antenna unit." Pet. 71–72 (citing Ex. 1023, 3:26–36, 9:44–58; Ex. 1003 ¶¶ 315–317). Petitioner similarly relies on the mapping table to show that a first portion of carriers (those in one RAN coverage segment) may be transmitted to a first remote unit and a second portion (a second RAN coverage segment) to a second remote unit. Pet. 73–74 (citing Ex. 1023, 9:11–20; Ex. 1003 ¶¶ 321–324). Patent Owner makes no additional arguments with respect to claim 21. On this record and taking into account Patent Owner's arguments, Petitioner has shown a reasonable likelihood of demonstrating that claim 21 is anticipated by Oh.

Petitioner also presents a sufficient showing supported by the record with respect to anticipation by Oh of dependent claims 2–9, 11–14, 16–20, and 22–25. *See* Pet. 78–83. With respect to these claims and anticipation over Oh, Patent Owner's arguments are addressed above. *See* Prelim. Resp. 55–61. For the reasons described with reference to claims 1, 10, 15, and 21, on this record and taking into account Patent Owner's prior arguments, Petitioner has shown a reasonable likelihood of demonstrating that claims 2–9, 11–14, 16–20, and 22–25 are anticipated by Oh.

K. Asserted Obviousness Based on Oh and Wu, Claims 1–8, 10, 11, 13, 15–19, 21, 23, 24

Petitioner argues the independent claims are obvious over the combination of Oh and Wu, referencing its argument that Oh anticipates the claims, but additionally arguing that in the proposed combination of Oh and Wu, Wu would provide teachings regarding "fine grained control" over carrier channels in place of Oh's DAS hub which receives and forwards RAN coverage segments. Pet. 83–84. Petitioner argues that one of ordinary skill "would have found it obvious to modify Oh's DAS hub to implement Wu's 'fine grained' control (e.g., using a combiner/splitter)." *Id.* at 84 (citing Ex. 1003 ¶¶ 392–396). Petitioner argues that one of ordinary skill would have done so to allow Wu's "fine grained control" to "further Oh's goal of allowing the routing to be 'changed when desired'" and to improve a known technique to improve a similar device *Id.* at 84–85 (citing Ex. 1023, 9:44–53; Ex. 1003 ¶¶ 393, 396).

Patent Owner argues that one of ordinary skill would not have combined Oh and Wu, due to their disparate teachings regarding what incoming traffic is routed, and because the two references "route traffic in a different manner." Prelim. Resp. 60–61. However, on the present record and for the purposes of institution, we credit Dr. Acampora's testimony and we determine that Petitioner has sufficiently shown that one of ordinary skill would have had reason to implement Wu's teachings in the system of Oh, resulting in a system which routes individual carriers rather than one RAN coverage segment to its remote devices.

Petitioner makes additional arguments with respect to the combination and dependent claims 2–7, 16–18, and 24. Pet. 85–87. Patent Owner presents no additional arguments regarding these claims, and we determine

that Petitioner has presented a sufficient showing supported by the record with respect to obviousness of these claims over Oh and Wu.

III. CONCLUSION

We determine that Petitioner has shown a reasonable likelihood of success in demonstrating that claims 1–25 are anticipated by Wu, obvious over Wu, or obvious over Wu and Sabat-426; that claims 8, 9, 11, and 19–25 are obvious over Wu and CPRI; that claims 26–30 are obvious over Wu and Sabat-552; and that claims 1–8, 10, 11, 13, 15–19, 21, 23, and 24 are anticipated by Oh or obvious over Oh and Wu.

While we do not find a reasonable likelihood of success in demonstrating that claims 8, 11, 19, 21, and 23–25 are obvious over Oh and "the OBSAI standard," *supra* § II.G, "[w]hen instituting *inter partes* review, the Board will authorize the review to proceed on all of the challenged claims and on all grounds of unpatentability asserted for each claim." 37 C.F.R. § 42.108(a).

IV. ORDER

In consideration of the foregoing, it is hereby

ORDERED that, pursuant to 35 U.S.C. § 314(a), an *inter partes* review is instituted for claims 1–30 of the '178 patent on all grounds presented in the Petition;

FURTHER ORDERED that pursuant to 35 U.S.C. § 314(c) and 37 C.F.R. § 42.4, notice is hereby given of the institution of a trial, which commences on the entry date of this decision.

For PETITIONER:

Philip Caspers
Samuel Hamer
CARLSON CASPERS VANDENBURGH & LINDQUIST
pcaspers@ccvl.com
shamer@carlsoncaspers.com

For PATENT OWNER:

Michael Kim
David Schumann
Michael Saunders
FOLIO LAW GROUP PLLC
Michael.kim@foliolaw.com
David.schumann@foliolaw.com
Mike.saunders@foliolaw.com