Information Disclosure Statement

Application No. To be assigned Attorney Docket No. US-0152.11 (14538-668)

EXAMINER INITIAL		DOCUMENT NUMBER Number-Kind Code (if known)	DATE	NAME
	A817	7,772,685	08/10/2010	Oakes, III et al.
	A818	7,778,457	08/17/2010	Nepomniachtchi et al.
	A819	7,792,752	09/07/2010	Kay
	A820	7,792,753	09/07/2010	Slater et al.
	A821	2010/0226559	09/09/2010	Najari et al.
	A822	2010/0225773	09/09/2010	Lee
	A823	7,810,714	10/12/2010	Murata
	A824	7,812,986	10/12/2010	Graham et al.
	A825	2010/0262522	10/14/2010	Anderson et al.
	A826	2010/0260408	10/14/2010	Prakash et al.
	A827	7,818,245	10/19/2010	Prakash et al.
	A828	2010/0274693 A1	10/28/2010	Bause et al.
	A829	7,831,458	11/09/2010	Neumann
	A830	2010/0312705	12/09/2010	Caruso et al.
	A831	7,856,402	12/21/2010	Kay
	A832	7,865,384	01/04/2011	Anderson et al.
	A833	7,873,200	01/18/2011	Oakes, III et al.
	A834	2011/0016084	01/20/2011	Mundy et al.
	A835	7,876,949	01/25/2011	Oakes, III et al.
	A836	7,885,451	02/08/2011	Walls et al.
	A837	7,885,880	02/08/2011	Prasad et al.
	A838	7,894,094	02/22/2011	Nacman et al.
	A839	7,895,054	02/22/2011	Slen et al.
	A840	7,896,232	03/01/2011	Prasad et al.
	A841	7,900,822	03/08/2011	Prasad et al.
	A842	7,903,863	03/08/2011	Jones et al.
	A843	7,904,386	03/08/2011	Kalra et al.
	A844	7,912,785	03/22/2011	Kay
	A845	2011/0069180 A1	03/24/2011	Nijemcevic et al.
	A846	2011/0106675	05/05/2011	Perlman
	A847	2011/0112967	05/12/2011	Anderson et al.
	A848	7,949,587	05/24/2011	Morris et al.
	A849	7,950,698	05/31/2011	Popadic et al.
	A850	7,953,441	05/31/2011	Lors
	A851	7,958,053	06/07/2011	Stone
	A852	7,962,411	06/14/2011	Prasad et al.
	A853	7,970,677	06/28/2011	Oakes, III et al.
	A854	7,974,899	07/05/2011	Prasad et al.
	A855	7,978,900	07/12/2011	Nepomniachtchi et al.
	A856	7,979,326	07/12/2011	Kurushima
	A857	2011/0170740	07/14/2011	Coleman
	A858	2011/0191161	08/04/2011	Dai
	A859	7,996,312	08/09/2011	Beck et al.
	A860	7,996,314	08/09/2011	Smith et al.
	A861	7,996,315	08/09/2011	Smith et al.
	A862	7,996,316	08/09/2011	Smith et al.
	A863	8,001,051	08/16/2011	Smith et al.
	A864	2011/0251956	10/13/2011	Cantley et al.
	A865	8,045,784	10/25/2011	Price et al.
	A866	8,046,301	10/25/2011	Smith et al.
	A867	8,060,442	11/15/2011	Hecht et al.
	A868	2011/0280450 A1	11/17/2011	Nepomniachtchi et al.

Examiner Signature	/I JUNG LIU/	Date Considered	03/01/2022

ALL REFERENCES CONSIDERED EXCEPT WHERE LINED THROUGH. /I.L./

Information Disclosure Statement

Application No. To be assigned Attorney Docket No. US-0152.11 (14538-668)

EXAMINER INITIAL		DOCUMENT NUMBER Number-Kind Code (if known)	DATE	NAME
	A869	8,065,307	11/22/2011	Haslam et al.
	A870	2011/0285874 A1	11/24/2011	Showering et al.
	A871	2011/0310442	12/22/2011	Popadic et al.
	A872	8,091,778	01/10/2012	Block et al.
	A873	8,116,533	02/14/2012	Kiplinger et al.
	A874	2012/0047070	02/23/2012	Pharris
	A875	2012/0062732	03/15/2012	Marman et al.
	A876	2012/0089514 A1	04/12/2012	Kraemling et al.
	A877	8,159,520	04/17/2012	Dhanoa
	A878	8,203,640	06/19/2012	Kim et al.
	A879	8,204,293	06/19/2012	Csulits et al.
	A880	2012/0185388	07/19/2012	Pranger
	A881	8,235,284	08/07/2012	Prasad et al.
	A882	8,266,076	09/11/2012	Lopez et al.
	A883	2012/0229872	09/13/2012	Dolev
	A884	8,271,385	09/18/2012	Emerson et al.
	A885	8,290,237	10/16/2012	Burks et al.
	A886	8,320,657	11/27/2012	Burks et al.
	A887	8,332,329	12/11/2012	Thiele
	A888	8,351,677	01/08/2013	Oakes, III et al.
	A889	8,351,678	01/08/2013	Medina, III
	A890	8,358,826	01/22/2013	Medina et al.
	A891	2013/0021651 A9	01/24/2013	Popadic et al.
	A892	8,364,563	01/29/2013	Choiniere, Sr.
	A893	8,391,599	03/05/2013	Medina, III
	A894	8,392,332	03/05/2013	Oakes, III et al.
	A895	8,401,962	03/19/2013	Bent et al.
	A896	8,422,758	04/16/2013	Bueche, Jr.
	A897	8.433,127	04/30/2013	Harpel et al.
	A898	8,433,647	04/30/2013	Yarbrough
	A899	8,452,689	05/28/2013	Medina, III
	A900	8,464,933	06/18/2013	Prasad et al.
	A901	2013/0223721	08/29/2013	Nepomniachtchi et al.
	A902	8,538,124	09/17/2013	Harpel et al.
	A903	8,542,921	09/24/2013	Medina
	A904	8,548,267	10/01/2013	Yacoub et al.
	A905	8,559,766	10/15/2013	Tilt et al.
	A906	8,582,862	11/12/2013	Nepomniachtchi et al.
	A907	8,611,635	12/17/2013	Medina, III
	A908	8,660,952 B1	02/25/2014	Viera
	A909	8,708,227	04/29/2014	Oakes, III et al.
	A910	8,732,081	05/20/2014	Oakes, III et al.
	A911	8,799,147	08/05/2014	Walls et al.
	A912	2014/0236820 A1	08/21/2014	Carlton
	A913	2015/0039528 A1	02/05/2015	Minogue
	A914	8,977,571	03/10/2015	Bueche, Jr. et al.
	A915	9,058,512	06/16/2015	Medina, III
	A916	9,286,514	03/15/2016	Newman
	A917	9,424,569	08/23/2016	Sherman et al.
	A918	9,569,756	02/14/2017	Bueche, Jr. et al.
	A919	9,818,090	11/14/2017	Bueche, Jr. et al.q
	A920	6,931,255 B2	08/16/2015	Mekuria

Examiner Signature	/I JUNG LIU/	Date Considered	03/01/2022

ALL REFERENCES CONSIDERED EXCEPT WHERE LINED THROUGH. /I.L./

Information Disclosure Statement

Application No. To be assigned Attorney Docket No. US-0152.11 (14538-668)

EXAMINER INITIAL		DOCUMENT NUMBER Number-Kind Code (if known)	DATE	NAME
	A921	7,120,461 B2	10/10/20016	Cho
	A922	7,419,093 B1	09/02/2008	Blackson et al.
	A923	2007/0262148 A1	11/15/2007	Yoon
	A924	1,748,489	02/25/1930	G. L. McCarthy et al.
	A925	2,292,825	08/11/1942	J. J. Dilks et al.
	A926	4,346,442	08/24/1982	Musmanno
	A927	5,122,950	06/16/1992	Benton et al.
	A928	5,134,564	07/28/1992	Dunn et al.
	A929	5,175,682	12/29/1992	Higashiyama et al.
	A930	5,233,547	08/03/1993	Kapp et al.
	A931	5,268,968	12/07/1993	Yoshida
	A932	5,283,829	02/01/1994	Anderson
	A933	5,345,090	09/06/1994	Hludzinski
	A934	5,383,113	01/17/1995	Kight et al.
	A935	5,444,616	08/22/1995	Nair et al.
	A936	5,859,935	01/12/1999	Johnson et al.
	A937	6,023,705	02/08/2000	Bellinger et al.
	A938	6,072,941	06/06/2000	Suzuki et al.
	A939	6,128,603	10/03/2000	Dent et al.
	A940	6,151,409	11/21/2000	Chen et al.
	A941	6,181,837	01/30/2001	Cahill et al.
	A942	6,339,766	01/15/2002	Gephart
	A943	6,354,490	03/12/2002	Weiss et al.
	A944	6,502,747	01/07/2003	Stoutenburg et al.
	A945	6,647,136	11/11/2003	Jones et al.
	A946	6,760,414	07/06/2004	Schurko et al.
	A947	6,873,728	03/29/2005	Bernstein et al.
	A948	7,046,991	05/16/2006	Little
	A949	7,117,171	10/03/2006	Pollin
	A950	7,120,461	10/10/2006	Cho
	A951	7,349,585	03/25/2008	Li
	A952	7,369,713	05/06/2008	Suino
	A953	7,388,683	06/17/2008	Rodriguez et al.
	A954	7,419,093	09/02/2008	Blackson et al.
	A955	7,460,700	12/02/2008	Tsunachima et al.
	A956	7,577,614	08/18/2009	Warren et al.
	A957	8,313,020	11/20/2012	Ramachandran
	A958	8,369,650	02/05/2013	Zanfir et al.
	A959	8,374,963	02/12/2013	Billman
	A960	8,433,127	04/30/2013	Harpel et al.
	A961	8,699,779	04/15/2014	Prasad, et al.
	A962	8,731,321	05/20/2014	Fujiwara et al.
	A963	8,751,345	06/10/2014	Borzyche et al.
	A964	8,751,356	06/10/2014	Garcia
	A965	8,751,379	06/10/2014	Bueche, Jr.
	A966	8,837,806	09/16/2014	Ethington et al.
	A967	8,843,405	09/23/2014	Hartman et al.
	A968	8,959,033	02/17/2015	Oakes, III et al.
	A969	8,990,862	03/24/2015	Smith
	A970	9,009,071	04/14/2015	Watson et al.
	A971	9,036,040	05/19/2015	Danko
	A972	9,064,284	06/23/2015	Janiszeski et al.

Examiner Signature	/I JUNG LIU/	Date Considered	03/01/2022

ALL REFERENCES CONSIDERED EXCEPT WHERE LINED THROUGH. /I.L./

Information Disclosure Statement

Application No. To be assigned Attorney Docket No. US-0152.11 (14538-668)

EXAMINER INITIAL		DOCUMENT NUMBER Number-Kind Code (if known)	DATE	NAME
	A973	9,129,340	08/09/2015	Medina, III et al.
	A974	9,159,101	10/13/2015	Pollack et al.
	A975	9,177,197	11/03/2015	Prasad et al.
	A976	9,177,198	11/03/2015	Prasad et al.
	A977	9,224,136	12/29/2015	Oakes, III et al.
	A978	9,311,634	04/12/2016	Hildebrand
	A979	9,336,517	05/10/2016	Prasad et al.
	A980	9,390,339	07/12/2016	Danko
	A981	9,401,011	07/26/2016	Medina, III et al.
	A982	9,424,569	08/23/2016	Sherman et al.
	A983	9,619,872	04/11/2017	Medina, III et al.
	A984	9,626,183	04/18/2017	Smith et al.
	A985	9,626,662	04/18/2017	Prasad et al.
	A986	9,779,392	10/03/2017	Prasad et al.
	A987	9,779,452	10/03/2017	Medina et al.
	A988	9,785,929	10/10/2017	Watson et al.
	A989	9,792,654	10/17/2017	Limas et al.
	A990	9,886,642	02/06/2018	Danko
	A991	9,892,454	02/13/2018	Pollack et al.
	A992	9,898,778	02/20/2018	Pollack et al.
	A993	9,898,808	02/20/2018	Medina, III et al.
	A994	9,904,848	02/27/2018	Newman
	A995	9,946,923	04/17/2018	Medina
	A996	10,013,605	07/03/2018	Oakes, III et al.
	A997	10,013,681	07/03/2018	Oakes, III et al.
	A998	2002/0013767 A1	01/31/2002	Katz
	A999	2002/0023055 A1	02/21/2002	Antognini et al.
	A1000	2002/0133409	09/19/2002	Sawano et al.
	A1001	2002/0138445 A1	09/26/2002	Laage te al.
	A1002	2002/0147798	10/10/2002	Huang
	A1003	2002/0150311	10/17/2002	Lynn
	A1004	2002/0153414 A1	10/24/2002	Stoutenburg et al.
	A1005	2002/0169715 A1	11/14/2002	Ruth et al.
	A1006	2003/0078883 A1	04/24/2003	Stewart et al.
	A1007	2003/0133608 A1	07/17/2003	Bernstein et al.
	A1008	2003/0135457 A1	07/17/2003	Stewart et al.
	A1009	2003/0187790 A1	10/02/2003	Swift et al.
	A1010	2003/0218061 A1	11/27/2003	Filatov
	A1011	2003/0231285 A1	12/18/2003	Ferguson
	A1012	2004/0029591 A1	02/12/2004	Chapman et al.
	A1013	2004/0075754	04/22/2004	Nakajima et al.
	A1014	2004/0076320	04/22/2004	Downs, Jr.
	A1015	2004/0103296	05/27/2004	Harp
	A1016	2004/0133516 A1	07/08/2004	Buchanan et al.
	A1017	2004/0148235	07/29/2004	Craig et al.
	A1018	2005/0033690 A1	02/10/2005	Antognini et al.
	A1019	2005/0038746	02/07/2005	Latimer et al.
	A1020	2005/0289059 A1	12/29/2005	Brewington et al.
	A1021	2006/0103893 A1	05/18/2006	Azimi et al.
	A1022	2006/0212393 A1	09/21/2006	Brown
	A1023	2006/0248009	11/02/2006	Hicks et al.
	A1024	2006/0289630	12/28/2006	Updike et al.

Examiner Signature	/I JUNG LIU/	Date Considered	03/01/2022

ALL REFERENCES CONSIDERED EXCEPT WHERE LINED THROUGH. /I.L./

Information Disclosure Statement

Application No. To be assigned Attorney Docket No. US-0152.11 (14538-668)

EXAMINER INITIAL		DOCUMENT NUMBER Number-Kind Code (if known)	DATE	NAME
	A1025	2007/0030357	02/08/2007	Levien et al.
	A1026	2007/0076941	04/05/2007	Carreon et al.
	A1027	2007/0175977 A1	08/02/2007	Bauer et al.
	A1028	2007/0262137 A1	11/15/2007	Brown
	A1029	2008/0046362 A1	02/21/2008	Easterly
	A1030	2009/0171795 A1	07/02/2009	Clouthier et al.
	A1031	2009/0257641	10/15/2009	Liu et al.
	A1032	2012/0045112 A1	02/23/2012	Lundblad et al.
	A1033	2012/0099792 A1	04/26/2012	Chevion et al.
	A1034	2012/0185383 A1	07/01/2012	Atsmon
	A1035	2013/0120595	05/16/2013	Roach et al.
	A1036	2014/0032406 A1	01/30/2014	Roach et al.
	A1037	2014/0279453 A1	09/19/2014	Belchee et al.
	A1038	US 4,027,142	05/3/1977	Paup et al.
	A1039	US 4,417,136	11/22/1983	Rushby et al.
	A1040	US 5,187,750	02/16/1993	Behera
	A1041	US 5,237,158	08/17/1993	Kern et al.
	A1042	US 5,530,773	06/25/1996	Thompson
	A1043	US 6,149,056	11/21/2000	Stinson et al.
	A1044	US 6,351,553	02/26/2002	Hayosh
	A1045	US 6,574,377 B1	06/03/2003	Cahill et al.
	A1046	US 6,760,470 B1	07/06/2004	Bogosian et al.
	A1047	US 7,027,171 B1	04/11/206	Watanabe
	A1048	US 7,028,886 B1	04/18/2006	Maloney
	A1049	US 7,935,441 B2	05/03/2011	Tononishi
	A1050	US 10,181,087 B1	01/15/2019	Danko
	A1051	US 10,235,660 B1	03/19/2019	Bueche, Jr. et al.
	A1052	US 2002/0152170 A1	10/17/2002	Dutta
	A1053	US 2003/0018897 A1	01/23/2003	Bellis, Jr. et al.
	A1054	US 2003/0200107 A1	10/23/2003	Allen et al.
	A1055	US 2004/0017482 A1	01/29/2004	Weitman
	A1056	US 2004/0201741 A1	10/14/2004	Ban
	A1057	US 2005/0015342 A1	01/20/2005	Murata et al.
	A1058	UD 2006/0015450 a1	01/19/2006	Guck et al.
	A1059	US 2006/0045379 A1	03/02/2006	Heaney, Jr. et al.
	A1060	US 2006/0202014 A1	09/14/2006	VanKirk et al.
	A1061	US 2008/0065524 A1	03/13/2008	Matthews et al.
	A1062	US 2008/0071679 A1	03/20/2008	Foley
	A1063	US 2008/0097907 A1	04/24/2008	Till et al.
	A1064	US 2013/0198071 A1	08/01/2013	Jurss
	A1065	US 2013/0297353 A1	11/07/2013	Strange
	A1066	US 2014/0067661 A1	03/06/2014	Elischer
	A1067	US 2015/0090782 A1	04/02/2015	Dent
	A1068	US 2006/0221198 A1	10/05/2006	Fry et al.
	A1069	US 7,793,833 B2	09/14/2010	Yoon et al.
	A1070	US 2006/0248009 A1	11-2006	Hicks; Sydney Smith
	A1071	US 6,023,705-A	02-2000	Bellinger; David T.
	A1072	US 2003/0217005 A1	11-2003	Drummond, Jay Paul
	A1073	US 2005/0097046 A1	05-2005	Singfield, Joy Shantia
	A1074	US 7,440,924 B2	10-2008	Buchanan; Danne L.
	A1075	US 2002/0152169	10-2002	Dutta, Rabindranath

Examiner Signature	/I JUNG LIU/	Date Considered	03/01/2022

ALL REFERENCES CONSIDERED EXCEPT WHERE LINED THROUGH. /I.L./

Information Disclosure Statement

Application No. To be assigned Attorney Docket No. US-0152.11 (14538-668)

FOREIGN PATENT REFERENCES

EXAMINER INITIAL		DOCUMENT NUMBER Number-Kind Code (if known)	DATE	COUNTRY	TRANSLATION YES OR NO
	A1076	EP 0 984 410 A1	03/08/2000	Europe	
	A1077	KR 20040076131 A	08/31/2004	Korea	Abstract
	A1078	WO 2006/075967 A1	07/20/2006	WIPO	
	A1079	WO 2006/136958 A2	12/28/2006	WIPO	
	A1080	WO 98/37655 A1	08/27/1998	WIPO	
	A1081	WO 01/61436 A2	08/23/2001	WIPO	
	A1082	WO 2006/086768 A2	08/17/2006	WIPO	
	A1083	EP 1 855 459 A2	05/10/2007	Europe	

OTHER ART – NON PATENT LITERATURE DOCUMENTS

EXAMINER INITIAL		Include name of author, title of the article (when appropriate), title of the item (book, magazine, journal, serial, symposium, catalog, etc.), date, page(s), volume-issue number(s), publisher, city and/or country where published.
	A1084	"Accept "Customer Not Present" Checks," Accept Check Online, http://checksoftware.com, Cited in patent no. 7,900,822, as dated 2007 (1 pg)
	A1085	"Adjusting Brightness and Contrast", www.eaglesoftware.com/adjustin.htm, retrieved on May 4, 2009 (4 pgs).
	A1086	"Best practices for producing quality digital image files," Digital Images Guidelines, http://deepblue.lib.umich.edu/bitstream/2027.42/40247/1/Images-Best_Practice.pdf, downloaded 2007 (2 pgs).
	A1087	"Chapter 7 Payroll Programs," Uniform Staff Payroll System, http://www2.oecn.k12.oh.us/www/ssdt/usps/usps_user_guide_005.html, Cited in patent no. 7,900,822, as dated 2007 (9 pgs)
	A1088	"Check 21 – The check is not in the post", RedTitan Technology 2004 http://www.redtitan.com/check21/htm (3 pgs)
	A1089	"Check 21 Solutions," Columbia Financial International, Inc. http://www.columbiafinancial.us/check21/solutions.htm, Cited in patent no. 7,900,822, as dated 2007 (8 pgs)
	A1090	"Check Fraud: A Guide to Avoiding Losses", All Net, http://all.net/books/audit/checkfraud/security.htm, Cited in patent no. 7,900,822, as dated 2007 (1 pg)
	A1091	"Compliance with Regulation CC", http./www/federalreserve.gov/Pubs/regcc/regcc.htm, January 24, 2006 (6 pgs)
	A1092	"Customer Personalized Bank Checks and Address Labels" Checks Your Way Inc., http://www.checksyourway.com/htm/web_pages/faq.htm, Cited in patent no. 7,900,822, as dated 2007 (6 pgs)
	A1093	"Deposit Now: Quick Start User Guide," BankServ, 2007, 2 pages.
	A1094	"Direct Deposit Application for Payroll", Purdue University, Business Office Form 0003, http://purdue.edu/payroll/pdf/directdepositapplication.pdf, July 2007 (2 pgs)
	A1095	"Direct Deposit Authorization Form", www.umass.edu/humres/library/DDForm.pdf, May 2003 (3 pgs)
	A1096	"Direct Deposit," University of Washington, http://www.washington.edu/admin/payroll/directdeposit.html, Cited in patent no. 7,900,822, as dated 2007 (3 pgs)
	A1097	"Electronic Billing Problem: The E-check is in the mail" American Banker-vol. 168, no. 95, May 19, 2003 (4 pgs)
	A1098	"First Wireless Handheld Check and Credit Card Processing Solution Launched by Commericant®, MobileScape® 5000 Eliminates Bounced Checks, Enables Payments Everywhere," Business Wire, March 13, 2016, 3 pages.
	A1099	"Frequently Asked Questions" Bank of America, http://www/bankofamerica.com/deposits/checksave/index.cfm?template-lc_faq_bymail, Cited in patent no. 7,900,822, as dated 2007 (2 pgs)

Examiner Signature	/I JUNG LIU/	Date Considered	03/01/2022

ALL REFERENCES CONSIDERED EXCEPT WHERE LINED THROUGH. /I.L./

Information Disclosure Statement

Application No. To be assigned Attorney Docket No. US-0152.11 (14538-668)

EXAMINER INITIAL	Include name of author, title of the article (when appropriate), title of the item (book, magazine, journal, serial, symposium, catalog, etc.), date, page(s), volume-issue number(s), publisher, city and/or country where published.	
	A1100	"Full Service Direct Deposit", www.nonprofitstaffing.com/images/upload/dirdepform.pdf. Cited in patent no. 7,900,822, as dated 2001, (2 pgs)
	A1101	"How to Digitally Deposit a Check Image", Smart Money Daily, Copyright 2008 (5 pgs).
	A1102	"ImageNet Mobile Deposit Provides Convenient Check Deposit and Bill Pay to Mobile Consumers," Miteksystems, 2008 (2 pgs).
	A1103	"It's the easiest way to Switch banks", LNB, http://www.inbky.com/pdf/LNBswitch-kit10-07.pdf Cited in patent no. 7,996,316, as dated 2007 (7 pgs)
	A1104	"Lesson 38 – More Bank Transactions", Turtle Soft, http://www.turtlesoft.com/goldenseal-software-manual.lesson38.htm, Cited in patent no. 7,900,822, as dated 2007 (8 pgs)
	A1105	"Middleware", David E. Bakken, Encyclopedia of Distributed Computing, Kluwer Academic Press, 2001 (6 pgs)
	A1106	"Mitek Systems Announces Mobile Deposit Application for Apple iPhone," http://prnewswire.com/cgi-bin/stories/pl?ACCT=104&STORY=/www/story/10-01-..., November 25, 2008 (2 pgs).
	A1107	"NOVA Enhances Electronic Check Service to Benefit Multi-Lane Retailers," Business Wire, November 28, 2006, 2 pages.
	A1108	"Personal Finance", PNC, http://www.pnc.com/webapp/unsec/productsandservice.do?sitearea=/PNC/home/personal/account+services/quick+switch/quick+switch+faqs, Cited in patent no. 7,900,822, as dated 2007 (12 pgs)
	A1109	"Refractive index" Wikipedia, the free encyclopedia; http://en.wikipedia.org./wiki /refractiveindex.com 10/16/2007 (4 pgs)
	A1110	"Remote check deposit is the answer to a company's banking problem," Daily Breeze, Torrance, CA, November 17, 2006, 2 pgs.
	A1111	"Remote Deposit Capture", Plante & Moran, http://plantemoran.com/industries/fincial/institutions/bank/resources/community+bank+advisor/2007+summer+issue/remote+deposit+capture.htm, Cited in patent no. 7,900,822, as dated 2007 (3 pgs)
	A1112	"Remote Deposit" National City, http://www.nationalcity.com/smallbusiness/cashmanagement/remotedeposit/default.asp; Cited in patent no. 7,900,822, as dated 2007 (1 pg)
	A1113	"Save on ATM Fees", RedEye Edition, Chicago Tribune, Chicago, IL 6/30/2007 (2 pgs)
	A1114	"SNB Check Capture: SmartClient User's Guide," November 2006, 21 pgs.
	A1115	"Switching Made Easy," Bank of North Georgia, http://www.banknorthgeorgia.com/cmsmaster/documents/286/documents616.pdf, 2007 (7 pgs)
	A1116	"Two Words Every Business Should Know: Remote Deposit," Canon, http://www.rpsolutions.com/rpweb/pdfs/canon_rdc.pdf, 2005 (7 pgs)
	A1117	"Virtual Bank Checks", Morebusiness.com, http://www.morebusiness.com/running_your business/businessbits/d908484987.brc, Cited in patent no. 7,900,822, as dated 2007 (3 pgs).
	A1118	"WallStreetGrapevine.com" Stocks on the Rise: JADG, BKYI, MITK; March 3, 2008 (4 pgs).
	A1119	"What is check Fraud", National Check Fraud Center, http://www.ckfraud.org/ckfraud.html , Cited in patent no. 7,900,822, as dated 2007 (12 pgs)

Examiner Signature	/I JUNG LIU/	Date Considered	03/01/2022

ALL REFERENCES CONSIDERED EXCEPT WHERE LINED THROUGH. /I.L./

Information Disclosure Statement

Application No. To be assigned Attorney Docket No. US-0152.11 (14538-668)

EXAMINER INITIAL	Include name of author, title of the article (when appropriate), title of the item (book, magazine, journal, serial, symposium, catalog, etc.), date, page(s), volume-issue number(s), publisher, city and/or country where published.	
	A1120	"Exchangeable image file format for digital still cameras: Exif Version 2.2," Standard of Electronics and Information Technology Industries Associate, JEITA CP-3451, Technical Standardization Committee on AV & IT Storage Systems and Equipments, Japan Electronics and Information Technology Industries Association, April 2002 (154 pgs).
	A1121	"Quicken Bill Pay", Retrieved from the Internet on Nov. 27, 2007 at: URL:http://quicken intuit.com/quicken-bill-pay-jhtml>, 2 pgs.
	A1122	"Start to Simplify with Check Imaging a Smarter Way to Bank", Retrieved from the Internet on Nov. 27, 2007 at: <URL: http://www.midnatbank.com/Internet%20Banking/internet_Banking.html>, 3 pgs.
	A1123	Affinity Federal Credit Union, "Affinity Announces Online Deposit," August 4, 2005 (1 pg)
	A1124	Albrecht, W. Steve, "Check Kiting: Detection, Prosecution and Prevention," The FBI Law Enforcement Bulletin, November 1, 1993 (6 pgs).
	A1125	Alves, Vander and Borba, Paulo; "Distributed Adapters Pattern: A Design for Object-Oriented Distributed Applications"; First Latin American Conference on Pattern Languages of Programming; October 2001; pages 132-142; Rio de Janeiro, Brazil (11 pgs)
	A1126	Amber Avalona-Butler / Paraglide, "At Your Service: Best iPhone Apps for Military Lifestyle," Jul. 9, 2010 (2 pgs)
	A1127	Anderson, Milton M. "FSML and Echeck", Financial Services Technology Consortium, 1999 (17 pgs)
	A1128	Anonymous, "Clearing House Electronic Check Clearing System ("CHECCS") Operating Rules," An IP.com Prior Art Database Technical Disclosure, (29 July 2005).
	A1129	Application as filed on April 3, 2008 for U.S. Appln No. 12/062,143 (27 pgs).
	A1130	Application as filed on August 19, 2010 for U.S. Appln No. 12/859,741 (235 pgs).
	A1131	Application as filed on August 21, 2008 for U.S. Appln No. 12/195,723 (38 pgs).
	A1132	Application as filed on August 21, 2009 for U.S. Appln No. 12/545,127 (45 pgs).
	A1133	Application as filed on August 28, 2009 for U.S. Appln No. 12/549,443 (41 pgs).
	A1134	Application as filed on December 20, 2006 for U.S. Appln No. 11/613,656 (21 pgs).
	A1135	Application as filed on December 29, 2005 for U.S. Appln No. 11/321,025 (19 pgs).
	A1136	Application as filed on December 30, 2010 for U.S. Appln No. 12/982,494 (280 pgs).
	A1137	Application as filed on December 30, 2010 for U.S. Appln No. 12/982,561 (275 pgs).
	A1138	Application as filed on December 30, 2010 for U.S. Appln No. 12/982,578 (274 pgs).
	A1139	Application as filed on December 30, 2010 for U.S. Appln No. 12/982,594 (275 pgs).
	A1140	Application as filed on February 15, 2012 for U.S. Appln No. 13/397,405 (19 pgs).
	A1141	Application as filed on February 18, 2009 for U.S. Appln No. 12/388,005 (37 pgs).
	A1142	Application as filed on January 6, 2017 for U.S. Appln No. 15/400,350 (62 pgs).
	A1143	Application as filed on January 7, 2013 for U.S. Appln 13/735,678 (30 pgs).
	A1144	Application as filed on July 13, 2006 for U.S. Appln No. 11/487,537 (23 pgs).
	A1145	Application as filed on July 27, 2009 for U.S. Appln No. 12/509,613 (48 pgs).
	A1146	Application as filed on July 27, 2009 for U.S. Appln No. 12/509,680 (41 pgs).
	A1147	Application as filed on June 11, 2008 for U.S. Appln No. 12/137,051 (29 pgs).
	A1148	Application as filed on June 8, 2011 for U.S. Appln No. 13/155,976 (352 pgs).

Examiner Signature	/I JUNG LIU/	Date Considered	03/01/2022

ALL REFERENCES CONSIDERED EXCEPT WHERE LINED THROUGH. /I.L./

Information Disclosure Statement

Application No. To be assigned Attorney Docket No. US-0152.11 (14538-668)

EXAMINER INITIAL	Include name of author, title of the article (when appropriate), title of the item (book, magazine, journal, serial, symposium, catalog, etc.), date, page(s), volume-issue number(s), publisher, city and/or country where published.	
	A1149	Application as filed on June 8, 2011 for U.S. Appln No. 13/156,007 (356 pgs).
	A1150	Application as filed on June 8, 2011 for U.S. Appln No. 13/156,018 (353 pgs).
	A1151	Application as filed on March 15, 2007 for U.S. Appln No. 11/686,924 (34 pgs).
	A1152	Application as filed on March 15, 2007 for U.S. Appln No. 11/686,928 (36 pgs).
	A1153	Application as filed on March 15, 2013 for U.S. Appln No. 13/842,112 (62 pgs).
	A1154	Application as filed on March 4, 2009 for U.S. Appln No. 12/397,671 (40 pgs).
	A1155	Application as filed on March 4, 2009 for U.S. Appln No. 12/397,930 (37 pgs).
	A1156	Application as filed on May 10, 2007 for U.S. Appln No. 11/747,222 (35 pgs).
	A1157	Application as filed on May 17, 2016 for U.S. Appln No. 15/156,860 (71 pgs).
	A1158	Application as filed on October 17, 2008 for U.S. Appln No. 12/253,278 (42 pgs).
	A1159	Application as filed on October 17, 2013 for U.S. Appln No. 14/056,565 (53 pgs).
	A1160	Application as filed on October 23, 2007 for U.S. Appln No. 11/876,925 (36 pgs).
	A1161	Application as filed on October 23, 2007 for U.S. Appln No. 11/877,335 (29 pgs).
	A1162	Application as filed on October 25, 2007 for U.S. Appln No. 11/923,839 (22 pgs).
	A1163	Application as filed on October 29, 2007 for U.S. Appln No. 11/926,388 (23 pgs).
	A1164	Application as filed on October 30, 2007 for U.S. Appln No. 11/928,297 (26 pgs).
	A1165	Application as filed on October 31, 2006 for U.S. Appln No. 11/590,974 (31 pgs).
	A1166	Application as filed on October 31, 2006 for U.S. Appln No. 11/591,008 (27 pgs).
	A1167	Application as filed on October 31, 2006 for U.S. Appln No. 11/591,227 (58 pgs).
	A1168	Application as filed on October 31, 2006 for U.S. Appln No. 11/591,273 (56 pgs).
	A1169	Application as filed on October 31, 2007 for U.S. Appln No. 11/930,537 (27 pgs).
	A1170	Application as filed on October 31, 2007 for U.S. Appln No. 11/931,670 (47 pgs).
	A1171	Application as filed on October 8, 2007 for U.S. Appln No. 11/868,878 (30 pgs).
	A1172	Application as filed on October 8, 2007 for U.S. Appln No. 11/868,884 (30 pgs).
	A1173	Application as filed on September 28, 2007 for U.S. Appln No. 11/864,569 (35 pgs).
	A1174	Application as filed on September 8, 2008 for U.S. Appln No. 12/205,996 (30 pgs).
	A1175	Aradhye, Hrishikesh B., "A Generic Method for Determining Up/Down Orientation of Text in Roman and Non-Roman Scripts," Pattern Recognition Society, December 13, 2014, 18 pages.
	A1176	Archive Index Systems; Panini My Vision X-30 or VX30 or X30 © 1994-2008 Archive Systems, Inc. P./O. Box 40135 Bellevue, WA USA 98015 (2 pgs)
	A1177	Associate of German Banks, "SEPA 2008: Uniform Payment Instruments for Europe, Berlin, Cited in patent no. 7,900,822, as dated July 2007, Bundesverbankd deutscher banker ev (42 pgs)
	A1178	*Automated Clearing Houses* (ACHs), Federal Reserve Bank of New York (May 2000) available at: https://www.newyorkfed.org/aboutthefed/fedpoint/fed31.html, (attached as Exhibit 12 from the Defendant Wells Fargo Bank, N.A.'s Answer dated August 14, 2018), 4 pgs.
	A1179	Automated Merchant Systems, Inc., "Electronic Check Conversion," http://www.automatedmerchant.com/electronic_check_conversion.cfm, 2006, downloaded October 18, 2006 (3 pgs).
	A1180	Bank Systems & Technology, Untitled Article, 5/1/2006, http://www.banktech.com/showarticle.jhtml? articleID=187003126, "Are you Winning in the Payment World?" (4 pgs)
	A1181	BankServ, "DepositNow: What's the difference?" Cited in patent no. 7,970,677, as dated 2006, (4 pgs)
	A1182	BankServ, Product Overview, http://www.bankserv.com/products/remotedeposit.htm, Cited in patent no. 7,970,677, as dated 2006, (3 pgs)

Examiner Signature	/I JUNG LIU/	Date Considered	03/01/2022

ALL REFERENCES CONSIDERED EXCEPT WHERE LINED THROUGH. /I.L./

Information Disclosure Statement

Application No. To be assigned Attorney Docket No. US-0152.11 (14538-668)

EXAMINER INITIAL	Include name of author, title of the article (when appropriate), title of the item (book, magazine, journal, serial, symposium, catalog, etc.), date, page(s), volume-issue number(s), publisher, city and/or country where published.	
	A1183	*Big Red Book*, Adobe Systems Incorporated, copyright 2000, (attached as Exhibit 27 from the Defendant Wells Fargo Bank, N.A.'s Answer dated August 14, 2018), 45 pgs.
	A1184	Blafore, Bonnie "Lower Commissions, Fewer Amenities", Better Investing, Madison Heights: Feb. 2003, vol. 52, Iss 6, (4 pgs)
	A1185	BLM Technologies, "Case Study: Addressing Check 21 and RDC Error and Fraud Threats," Remote Deposit Capture News Articles from June 11, 2007, Retrieved from http://www.remotedepositcapture.com/News/june_11_2007.htm on February 19, 2008 (5 pgs).
	A1186	Blue Mountain Consulting, from URL: www.bluemontainconsulting.com, Cited in patent no. 7,900,822, as dated 4/26/2006 (3 pgs)
	A1187	Board of Governors of the federal reserve system, "Report to the Congress on the Check Clearing for the 21st Century Act of 2003" 4/2007, Submitted to Congress pursuant to section 16 of the Check Clearing for the 21st Century Act of 2003, (59 pgs)
	A1188	Braun, Tim, "Camdesk - Towards Portable and Easy Document Capture," Image Understanding and Pattern Recognition Research Group, Department of Computer Science, University of Kaiserslautern, Technical Report, March 29, 2005 (64 pgs).
	A1189	Bruene, Jim; "Check Free to Enable In-Home Remote Check Deposit for Consumers and Small Business", NetBanker. Com, Financial Insite, Inc., http://www. netbanker.com/2008/02/checkfree_to_enableinhome_rem.html, February 5, 2008 (3 pgs).
	A1190	Bruene, Jim; "Digital Federal Credit Union and Four Others Offer Consumer Remote Deposit Capture Through EasCorp", NetBanker - Tracking Online Finance, www.netbanker.com/2008/04/digital_federal_credit_union_a.html, April 13, 2008 (3 pgs).
	A1191	Bruno, M., "Instant Messaging," Bank Technology News," Dec. 2002 (3 pgs).
	A1192	Burnett, J. "Depository Bank Endorsement Requirements," BankersOnline.com, http://www.bankersonline.com/cgi-bin/printview/printview.pl, 1/6/03 (3 pgs)
	A1193	Canon EOS 40D Digital Camera Instruction Manual, located on the Internet at: http://gdlp01.c-wss.com/gds/6/0900008236/01/EOS40D_HG_EN.pdf (attached as Exhibit 6 from the Defendant Wells Fargo Bank, N.A.'s Answer dated August 14, 2018), 38 pgs.
	A1194	Canon, ImageFormula CR-25/CR-55, "Improve Your Bottom Line with Front-Line Efficiencies", 0117W117, 1207-55/25-1 OM-BSP, Cited in U.S. Pat. No. 7,949,587 as dated 2007. (4 pgs)
	A1195	Carrubba, P. et al., "Remote Deposit Capture: A White Paper Addressing Regulatory, Operational and Risk Issues," NetDeposit Inc., 2006 (11 pgs).
	A1196	Century Remote Deposit High-Speed Scanner User's Manual Release 2006, (Century Manual), Century Bank, 2006, (32 pgs).
	A1197	Check Clearing for the 21st Century Act Foundation for Check 21 Compliance Training, Federal Financial Institutions Examination Council, (Oct. 16, 2004), available on the Internet at: https://web.archive.org/web/20041016100648/https://www.ffiec,gov/exam/check21/check21foundationdoc.htm, (excerpts attached as Exhibit 20 from the Defendant Wells Fargo Bank, N.A.'s Answer dated August 14, 2018), 11 pgs.
	A1198	Chiang, Chuck, The Bulletin, "Remote banking offered", http://bendbulletin.com/apps/pbcs.dll/article?AID=/20060201/BIZ0102/602010327&templ..., May 23, 2008 (2 pgs).
	A1199	Claims as filed January 24, 2018 for U.S. Appln No. 15/878,821 (5 pgs).
	A1200	Claims as filed January 31, 2018 for U.S. Appln No. 15/884,990 (6 pgs).
	A1201	Claims as filed on April 1, 2013 for U.S. Appln No. 13/854,521 (5 pgs).

Examiner Signature	/I JUNG LIU/	Date Considered	03/01/2022

ALL REFERENCES CONSIDERED EXCEPT WHERE LINED THROUGH. /I.L./

Information Disclosure Statement

Application No. To be assigned Attorney Docket No. US-0152.11 (14538-668)

EXAMINER INITIAL	Include name of author, title of the article (when appropriate), title of the item (book, magazine, journal, serial, symposium, catalog, etc.), date, page(s), volume-issue number(s), publisher, city and/or country where published.	
	A1202	Claims as filed on April 3, 2008 for U.S. Appln No. 12/062,163 (3 pgs).
	A1203	Claims as filed on April 3, 2008 for U.S. Appln No. 12/062,175 (3 pgs).
	A1204	Claims as filed on April 30, 2013 for U.S. Appln No. 13/874,145 (5 pgs).
	A1205	Claims as filed on April 9, 2018 for U.S. Appln No. 15/948,510 (5 pgs)
	A1206	Claims as filed on April 9, 2018 for U.S. Appln No. 15/948,549 (5 pgs)
	A1207	Claims as filed on August 19, 2010 for U.S. Appln No. 12/859,752 (5 pgs).
	A1208	Claims as filed on August 21, 2009 for U.S. Appln No. 12/545,127 (5 pgs).
	A1209	Claims as filed on December 15, 2011 for U.S. Appln No. 13/327,478 (4 pgs).
	A1210	Claims as filed on December 20, 2006 for U.S. Appln No. 11/613,671 (3 pgs).
	A1211	Claims as filed on December 20, 2012 for U.S. Appln No. 13/722,576 (4 pgs).
	A1212	Claims as filed on December 28, 2016 for U.S. Appln No. 15/392,950 (5 pgs).
	A1213	Claims as filed on December 29, 2005 for U.S. Appln No. 11/320,998 (3 pgs).
	A1214	Claims as filed on December 29, 2005 for U.S. Appln No. 11/321,027 (3 pgs).
	A1215	Claims as filed on December 8, 2010 for U.S. Appln No. 12/963,513 (7 pgs).
	A1216	Claims as filed on December 9, 2015 for U.S. Appln No. 14/964,279 (5 pgs).
	A1217	Claims as filed on February 12, 2013 for U.S. Appln No. 13/765,412 (1 pg).
	A1218	Claims as filed on February 15, 2012 for U.S. Appln No. 13/397,437 (6 pgs).
	A1219	Claims as filed on February 16, 2011 for U.S. Appln No. 13/028,477 (3 pgs).
	A1220	Claims as filed on February 16, 2015 for U.S. Appln No. 14/623,179 (10 pgs).
	A1221	Claims as filed on February 19, 2013 for U.S. Appln No. 13/770,048 (4 pgs).
	A1222	Claims as filed on February 3, 2016 for U.S. Appln No. 15/014,918 (5 pgs).
	A1223	Claims as filed on January 20, 2011 for U.S. Appln No. 13/010,644 (9 pgs).
	A1224	Claims as filed on January 31, 2011 for U.S. Appln No. 13/017,865 (11 pgs).
	A1225	Claims as filed on July 19, 2017 for U.S. Appln No. 15/654,497 (1 pg).
	A1226	Claims as filed on July 28, 2017 for U.S. Appln No. 15/663,284 (6 pgs).
	A1227	Claims as filed on July 28, 2017 for U.S. Appln No. 15/663,305 (6 pgs).
	A1228	Claims as filed on June 12, 2015 for U.S. Appln No. 14/738,340 (4 pgs).
	A1229	Claims as filed on June 13, 2012 for U.S. Appln No. 13/495,971 (36 pgs).
	A1230	Claims as filed on June 15, 2016 for U.S. Appln No. 15/183,461 (36 pgs).
	A1231	Claims as filed on June 20, 2013 for U.S. Appln No. 13/922,686 (7 pgs).
	A1232	Claims as filed on June 9, 2014 for U.S. Appln No. 14/299,456 (36 pgs).
	A1233	Claims as filed on March 15, 2007 for U.S. Appln No. 11/686,925 (5 pgs).
	A1234	Claims as filed on March 20, 2014 for U.S. Appln No. 14/220,799 (1 pg). (NOT 25th)
	A1235	Claims as filed on March 23, 2017 for U.S. Appln No. 15/467,167 (4 pgs).
	A1236	Claims as filed on March 25, 2014 for U.S. Appln No. 14/224,944 (4 pgs).
	A1237	Claims as filed on March 25, 2014 for U.S. Appln No. 14/225,090 (1 pg).
	A1238	Claims as filed on March 3, 2014 for U.S. Appln No. 14/195,482 (4 pgs).
	A1239	Claims as filed on May 10, 2007 for U.S. Appln No. 11/747,223 (4 pgs).
	A1240	Claims as filed on May 18, 2011 for U.S. Appln No. 13/110,077 (9 pgs).
	A1241	Claims as filed on May 2, 2011 for U.S. Appln No. 13/098,566 (10 pgs).
	A1242	Claims as filed on November 20, 2012 for U.S. Appln No. 13/682,268 (4 pgs).
	A1243	Claims as filed on November 23, 2016 for U.S. Appln No. 15/360,738 (3 pgs).
	A1244	Claims as filed on November 25, 2015 for U.S. Appln No. 14/952,625 (1 pg).
	A1245	Claims as filed on November 7, 2016 for U.S. Appln No. 15/345,190 (5 pgs).
	A1246	Claims as filed on October 09, 2015 for U.S. Appln No. 14/879,868 (4 pgs).
	A1247	Claims as filed on October 16, 2014 for U.S. Appln No. 14/516,335 (4 pgs).
	A1248	Claims as filed on October 16, 2014 for U.S. Appln No. 14/516,350 (4 pgs).
	A1249	Claims as filed on October 16, 2014 for U.S. Appln No. 14/516,364 (4 pgs).
	A1250	Claims as filed on October 2, 2017 for U.S. Appln No. 15/722,836 (4 pgs).
	A1251	Claims as filed on October 23, 2007 for U.S. Appln No. 11/877,382 (6 pgs).
	A1252	Claims as filed on October 24, 2008 for U.S. Appln No. 12/257,471 (4 pgs).

Examiner Signature	/I JUNG LIU/	Date Considered	03/01/2022

ALL REFERENCES CONSIDERED EXCEPT WHERE LINED THROUGH. /I.L./

Information Disclosure Statement

Application No. To be assigned Attorney Docket No. US-0152.11 (14538-668)

EXAMINER INITIAL	Include name of author, title of the article (when appropriate), title of the item (book, magazine, journal, serial, symposium, catalog, etc.), date, page(s), volume-issue number(s), publisher, city and/or country where published.	
	A1253	Claims as filed on October 25, 2017 for U.S. Appln No. 15/792,966 (5 pgs).
	A1254	Claims as filed on October 31, 2006 for U.S. Appln No. 11/590,963 (3 pgs).
	A1255	Claims as filed on October 31, 2006 for U.S. Appln No. 11/590,995 (3 pgs).
	A1256	Claims as filed on October 31, 2006 for U.S. Appln No. 11/590,998 (4 pgs).
	A1257	Claims as filed on October 31, 2006 for U.S. Appln No.11/591,131 (4 pgs).
	A1258	Claims as filed on October 31, 2007 for U.S. Appln No. 11/931,804 (4 pgs).
	A1259	Claims as filed on October 8, 2007 for U.S. Appln No. 11/868,878 (4 pgs).
	A1260	Claims as filed on September 14, 2012 for U.S. Appln No. 13/619,026 (3 pgs).
	A1261	Claims as filed on September 2, 2008 for U.S. Appln No. 12/202,781 (4 pgs).
	A1262	Claims as filed on September 4, 2015 for U.S. Appln No. 14/846,586 (7 pgs).
	A1263	Claims as filed on September 5, 2017 for U.S. Appln No. 15/695,770 (7 pgs).
	A1264	Claims as filed on September 8, 2008 for U.S. Appln No. 12/206,001 (3 pgs).
	A1265	Claims as filed on September 8, 2008 for U.S. Appln No. 12/206,007 (3 pgs).
	A1266	Claims as filed September 19, 2017 for U.S. Appln No. 15/709,071 (1 pgs).
	A1267	Claims as filed September 19, 2017 for U.S. Appln No. 15/709,126 (1 pgs).
	A1268	Claims as filed September 19, 2017 for U.S. Appln No. 15/709,143 (x pgs).
	A1269	CNN.com/technology, "Scan, deposit checks from home", www.cnn.com/2008ITECH/biztech/02/07/check.scanning.ap/index.html, February 7,2008 (3 pgs).
	A1270	Constanzo, Chris, "Remote Check Deposit: Wells Captures A New Checking Twist", Bank Technology News Article – May 2005, www.americanbanker.com/btn_article.html?id=20050502YQ50FSYG (2 pgs)
	A1271	Craig, Ben, "Resisting Electronic Payment Systems: Burning Down the House?", Federal Reserve Bank of Cleveland, July 1999 (4 pgs)
	A1272	Creativepaymentsolutions.com, "Creative Payment Solutions - Websolution," www.creativepaymentsolution.com/cps/financialservices/websolution/default.html , Copyright 2008, Creative Payment Solutions, Inc. (1 pg).
	A1273	Credit Union Journal, "The Ramifications of Remote Deposit Capture Success", www.cuiournal.com/orintthis.html?id=20080411 EODZT57G, April 14, 2008 (1 pg).
	A1274	Credit Union Journal, "AFCU Averaging 80 DepositHome Transactions Per Day", Credit Union Journal, August 15, 2005 (1 pg)
	A1275	Credit Union Management, "When You wish Upon an Imaging System...the Right Selection Process can be the Shining Star," Credit Union Management, August 1993, printed from the internet at <http://search.proquest.com/docview/227756409/14138420743684F7722/15?accountid=14...>, on October 19, 2013 (11 pgs).
	A1276	David B. Humphrey & Robert Hunt, *Getting Rid of Paper: Savings From Check 21*, Working Paper No. 12-12, Research Department, Federal Reserve Bank of Philadelphia, (May 2012), available on the Internet at: https://philadelphiafed.org/-/media/research-and-data/publications/working-papers/2012/wp12-12.pdf (attached as Exhibit 14 from the Defendant Wells Fargo Bank, N.A.'s Answer dated August 14, 2018), 29 pgs.
	A1277	DCU Member's Monthly - January 2008, "PC Deposit - Deposit Checks from Home!", http://www.mycreditunionnewsletter.com/dcu/01 08/page1. html, Copyright 2008 Digital Federal Credit Union (2 pgs).
	A1278	De Jesus, A. et al., "Distributed Check Processing in a Check 21 Environment: An educational overview of the opportunities and challenges associated with implementing distributed check imaging and processing solutions," Panini, 2004, pp 1-22.
	A1279	De Queiroz, Ricardo et al., "Mixed Raster Content (MRC) Model for Compound Image Compression", 1998 (14 pgs)

Examiner Signature	/I JUNG LIU/	Date Considered	03/01/2022

ALL REFERENCES CONSIDERED EXCEPT WHERE LINED THROUGH. /I.L./

Information Disclosure Statement

Application No. To be assigned Attorney Docket No. US-0152.11 (14538-668)

EXAMINER INITIAL	Include name of author, title of the article (when appropriate), title of the item (book, magazine, journal, serial, symposium, catalog, etc.), date, page(s), volume-issue number(s), publisher, city and/or country where published.	
	A1280	Debello, James et al., "RDM and Mitek Systems to Provide Mobile Check Deposit," Mitek Systems, Inc., San Diego, California and Waterloo, Ontario, (02/24/2009), 2 pgs.
	A1281	Defendant Wells Fargo Bank, N.A.'s Answer, Affirmative Defenses, and Counterclaims to Plaintiff's Complaint, dated August 14, 2018, 64 pgs.
	A1282	DeYoung, Robert; "The Financial Performance of Pure Play Internet Banks"; Federal Reserve Bank of Chicago Economic Perspectives; 2001; pages 60-75; Vol. 25, No. 1 (16pgs)
	A1283	Dias, Danilo et al., "A Model for the Electronic Representation of Bank Checks", Brasilia Univ. Oct. 2006 (5 pgs)
	A1284	Digital Transactions News, "An ACH-Image Proposal For Check Roils Banks and Networks" 5/26/2006 (3 pgs)
	A1285	Dinan, R.F. et al., "Image Plus High Performance Transaction System", IBM Systems Journal, 1990 vol. 29, No. 3 (14 pgs)
	A1286	Doermann, David et al., "Progress in Camera-Based Document Image Analysis," Proceedings of the Seventh International Conference on Document Analysis and Recognition (ICDAR 2003) 0-7695-1960-1/03, 2003 IEEE (11 pages).
	A1287	Duvall, Mel, "Remote Deposit Capture," Baseline, Vol. 1, Issue 70, March 2007, 2 pgs.
	A1288	eCU Technologies, "Upost Remote Deposit Solution," Retrieved from the internet https://www.eutechnologies.com/products/upost.html, downloaded 2009 (1 pg).
	A1289	EFT Network Unveils FAXTellerPlus, EFT Network, Inc., www.eftnetwork.com, Jan. 13, 2009 (2 pgs)
	A1290	ElectronicPaymentProviders, Inc., "FAQs: ACH/ARC, CheckVerification/Conversion/Guarantee, RCK Check Re-Presentment," http://www.useapp.com/faq.htm, downloaded October 18, 2006 (3 pgs).
	A1291	Ex Parte Quayle Action from corresponding U.S. Appln No. 11/590,974 dated September 25, 2012 (5 pgs).
	A1292	Examiner's Answer to Appeal Brief dated February 08, 2018 from correpsonding U.S. Appln 14/225,090 (10 pgs.).
	A1293	Federal Check 21 Act, "New Check 21 Act effective 10/28/04: Bank No Longer Will Return Original Cancelled Checks," Consumer Union's FAQ's and Congressional Testimony on Check 21, www.consumerlaw.org.initiatives/content/check21_content.html, Cited in patent no. 7,873,200, as dated Dec. 2005 (20 pgs)
	A1294	Federal Reserve Board, "Check Clearing for the 21st Century Act", FRB, http://www.federalreserve.gov/paymentsystems/truncation/, 3/1/2006 (1 pg)
	A1295	Federal Reserve System, "12 CFR, Part 229 [Regulation CC; Docket No. R-0926]: Availability of Funds and Collection of Checks," Federal Registrar, April 28, 1997, pp. 1-50.
	A1296	Federal Reserve System, "Part IV, 12 CFR Part 229 [Regulation CC; Docket No. R-1176]: Availability of Funds and Collection of Checks; Final Rule," Federal Registrar, Vol. 69, No. 149, August 4, 2004, pp. 47290-47328.
	A1297	Fest, Glen., "Patently Unaware" Bank Technology News, April 2006, Retrieved from the internet at URL:http://banktechnews.com/article.html?id=2006403T7612618 (5 pgs)
	A1298	Fidelity Information Services, "Strategic Vision Embraces Major Changes in Financial Services Solutions: Fidelity's long-term product strategy ushers in new era of application design and processing," Insight, 2004, pp. 1-14.
	A1299	Final Office Action dated April 24, 2018 from corresponding U.S. Appln No. 15/709,126 (9 pgs).
	A1300	Final Office Action dated May 18, 2017 from corresponding U.S. Appln No. 14/225,090 (8 pgs).

Examiner Signature	/I JUNG LIU/	Date Considered	03/01/2022

ALL REFERENCES CONSIDERED EXCEPT WHERE LINED THROUGH. /I.L./

Information Disclosure Statement

Application No. To be assigned Attorney Docket No. US-0152.11 (14538-668)

EXAMINER INITIAL	Include name of author, title of the article (when appropriate), title of the item (book, magazine, journal, serial, symposium, catalog, etc.), date, page(s), volume-issue number(s), publisher, city and/or country where published.	
	A1301	Final Office Action dated May 4, 2018 from corresponding U.S. Appn No. 15/709,071 (13 pgs).
	A1302	Final Office Action dated September 30, 2015 from corresponding U.S. Appln No. 14/225,090 (10 pgs).
	A1303	Final Office Action from corresponding U.S. Appln No. 11/590,974 dated November 3, 2009 (6 pages)
	A1304	Final Office Action from corresponding U.S. Appln No. 11/591,003 dated January 24, 2012 (12 pages)
	A1305	Final Office Action from corresponding U.S. Appln No. 11/591,003 dated June 9, 2010 (15 pages)
	A1306	Final Office Action from corresponding U.S. Appln No. 11/591,003 dated October 17, 2008 (11 pages)
	A1307	Fisher, Dan M., "Home Banking in the 21st Century: Remote Capture Has Gone Retail", May 2008 (4 pgs).
	A1308	Furst, Karen et al., "Internet Banking: Developments and Prospects", Economic and Policy Analysis Working Paper 2000-9, September 2000 (60 pgs)
	A1309	Garry, M., "Checking Options: Retailers face an evolving landscape for electronic check processing that will require them to choose among several scenarios," Supermarket News, Vol. 53, No. 49, 2005 (3 pgs).
	A1310	German Shegalov, Diplom-Informatiker, "Integrated Data, Message, and Process Recovery for Failure Masking in Web Services", Dissertation July 2005 (146 pgs)
	A1311	Gupta, Amar et al., "An Integrated Architecture for Recognition of Totally Unconstrained Handwritten Numerals", WP#3765, Jan. 1993, Productivity from Information Technology "Profit" Research Initiative Sloan School of Management (20 pgs)
	A1312	Gupta, Maya R. et al., "OCR binarization and image pre-processing for searching historical documents," Pattern Recognition, Vol. 40, No. 2, February 2007, pp. 389-397.
	A1313	Hale, J., "Picture this: Check 21 uses digital technology to speed check processing and shorten lag time," Columbus Business First, http://columbus.bizjournals.com/columbus/stories/2005/03/14focus1.html, downloaded 2007 (3 pgs).
	A1314	Hartly, Thomas, "Banks Check Out New Image", Business First, Buffalo: 7/19/2004, vol. 20, Issue 43, (3 pgs)
	A1315	Heckenberg, D. "Using Mac OS X for Real-Time Image Processing" 10/08/2003 (15 pgs)
	A1316	Helio Ocean User Manual, located on the Internet at: https://standupwireless.com/wp-content/uploads/2017/04/Manual_PAN-TECH_OCEAN.pdf (excerpts attached as Exhibit 10 from the Defendant Wells Fargo Bank, N.A.'s Answer dated August 14, 2018), 76 pgs.
	A1317	Herley, Cormac, "Efficient Inscribing of Noisy Rectangular Objects in Scanned Images," 2004 International Conference on Image Processing, 4 pages.
	A1318	Hildebrand, C. et al., "Electronic Money," Oracle, http://www.oracle.com/oramag/profit/05-feb/p15financial.html, 2005, downloaded October 18, 2006 (5 pgs).
	A1319	Hillebrand, G., "Questions and Answers About the Check Clearing for the 21st Century Act, 'Check 21," ConsumersUnion.org, http://www.consumersunion.org/finance/ckclear1002.htm, July 27, 2004, downloaded October 18, 2006 (6 pgs).
	A1320	HTC Touch Diamond Manual, copyright 2008, (attached as Exhibit 11 from the Defendant Wells Fargo Bank, N.A.'s Answer dated August 14, 2018), 257 pgs.

Examiner Signature	/I JUNG LIU/	Date Considered	03/01/2022

ALL REFERENCES CONSIDERED EXCEPT WHERE LINED THROUGH. /I.L./

Information Disclosure Statement

Application No. To be assigned Attorney Docket No. US-0152.11 (14538-668)

EXAMINER INITIAL	Include name of author, title of the article (when appropriate), title of the item (book, magazine, journal, serial, symposium, catalog, etc.), date, page(s), volume-issue number(s), publisher, city and/or country where published.	
	A1321	Iida, Jeanne, "The Back Office: Systems - Image Processing Rolls on as Banks ReapBenefits," American Banker, July 19, 1993, printed from the internet at <http://search.proquest.com/docview/292903245/14138420743684F7722/14?accountid=14...>, on October 19, 2013 (3 pgs).
	A1322	Image Master, "Photo Restoration: We specialize in digital photo restoration and photograph repair of family pictures", http://www.imphotorepair.com, Cited in patent no. 7,900,822, as downloaded 4/2007 (1 pg)
	A1323	Investment Systems Company, "Portfolio Accounting System," 2000, pp. 1-32.
	A1324	JBC, "What is a MICR Line?," eHow.com, retrieved from http://www.ehow.com/about_4684793_what-micr-line.html on May 4, 2009 (2 pgs).
	A1325	Jeffrey M. Lacker, *Payment System Disruptions and the Federal Reserve Following September 11, 2001*, The Federal Reserve Bank of Richmond, (Dec. 23, 2003) (attached as Exhibit 19 from the Defendant Wells Fargo Bank, N.A.'s Answer dated August 14, 2018), 55 pgs.
	A1326	Johnson, Jennifer J., Secretary of the Board; Federal Reserve System, 12 CFR Part 229, Regulation CC; Docket No. R 1176, "Availability of Funds and Collection of Checks". Cited in patent no. 7,900,822, as dated 2009, (89 pgs)
	A1327	Kendrick, Kevin B., "Check Kiting, Float for Purposes of Profit," Bank Security & Fraud Prevention, vol. 1, no. 2, 1994 (3 pgs).
	A1328	Kiser, Elizabeth K.; "Modeling the Whole Firm: The Effect of Multiple Inputs and Financial Intermediation on Bank Deposit Rates;" FEDS Working Paper No. 2004-07; June 3, 2003; pages 1-46 (46 pgs)
	A1329	Knestout, Brian P. et al., "Banking Made Easy" Kiplinger's Personal Finance Washington, July 2003, vol 57, Iss 7 (5 pgs)
	A1330	Kornai Andras et al., "Recognition of Cursive Writing on Personal Checks", Proceedings of International Workshop on the Frontiers in Handwriting Recognition, Cited in patent no. 7,900,822, as dated September 1996, (6 pgs)
	A1331	Lampert, Christoph et al., "Oblivious Document Capture and Real-Time Retrieval," International Workshop on Camera Based Document Analysis and Recognition (CBDAR), 2005 (8 pgs).
	A1332	Leaning, Jeffrey Scott (Reg. No. 51,184); "REMARKS and CONCLUSION" in Response to Office Action mailed 11/27/2007; Response submitted to the USPTO on February 20, 2008; United States Patent Application No. 09/506,434 filed 02/18/2000; 6 pages.
	A1333	LEICA DIGILUX 2 Instructions located on the Internet: http://www.overgaard.dk/pdf/d2_manual.pdf (attached as Exhibit 2 from the Defendant Wells Fargo Bank N.A.'s Answer dated August 14, 2018), 95 pgs.
	A1334	Levitin, Adam J., Remote Deposit Capture: A Legal and Transactional Overview, Banking Law Journal, p. 115, 2009 (RDC)
	A1335	Liang, Jian et al., Camera-Based Analysis of Text and Documents: A Survey, International Journal on Document Analysis and Recognition, June 21, 2005, 21 pages.
	A1336	Luo, Xi-Peng et al., "Design and Implementation of a Card Reader Based on Build-In Camera," Proceedings of the 17th International Conference on Pattern Recognition, 2004, 4 pages.
	A1337	Masonson, L., "Check Truncation and ACH Trends – Automated Clearing Houses", healthcare financial management associate, http://www.findarticles.com/p/articles/mLm3276/is_n7_v47/ai_14466034/print, 1993 (2 pgs)
	A1338	Matthews, Deborah, "Advanced Technology Makes Remote Deposit Capture Less Risky," Indiana Bankers Association, April 2008 (2 pgs).

Examiner Signature	/I JUNG LIU/	Date Considered	03/01/2022

ALL REFERENCES CONSIDERED EXCEPT WHERE LINED THROUGH. /I.L./

Information Disclosure Statement

Application No. To be assigned Attorney Docket No. US-0152.11 (14538-668)

EXAMINER INITIAL	Include name of author, title of the article (when appropriate), title of the item (book, magazine, journal, serial, symposium, catalog, etc.), date, page(s), volume-issue number(s), publisher, city and/or country where published.	
	A1339	Metro 1 Credit Union, "Remote Banking Services," hltp://ww\\i.metro1cu.org/metro1cu/remote.html, downloaded April 17, 2007 (4 pgs).
	A1340	Mitek systems, "Imagenet Mobile Deposit", San Diego, CA, downloaded 2009 (2 pgs).
	A1341	Mitek Systems: Mitek Systems Launches First Mobile Check Deposit and Bill Pay Application, San Diego, CA, January 22, 2008 (3 pgs).
	A1342	Mohl, Bruce, "Banks Reimbursing ATM Fee to Compete With Larger Rivals", Boston Globe, Boston, MA, September 19, 2004 (3 pgs)
	A1343	Moreau, T., "Payment by Authenticated Facsimile Transmission: a Check Replacement Technology for Small and Medium Enterprises," CONNOTECH Experts-conseils, Inc., April 1995 (31 pgs).
	A1344	MOTOMANUAL for MOTORAZR, located on the Internet at: https://www.cellphones.ca/downloads/phones/manuals/motorola-razr-v3xx-manual.pdf (excerpts attached as Exhibit 8 from the Defendant Wells Fargo Bank, N.A.'s Answer dated August 14, 2018), 34 pgs.
	A1345	Motorola RAZR MAXX V6 User Manual, located on the Internet at: https://www.phonearena.com/phones/Motorola-RAZR-MAXX-V6_id1680 (attached as Exhibit 7 from the Defendant Wells Fargo Bank, N.A.'s Answer dated August 14, 2018), 36 pgs.
	A1346	Nelson, B. et al., "Remote deposit capture changes the retail landscape," Northwestern Financial Review, http://findarticles.com/p/articles/mi qa3799/is 200607/ai_n16537250, 2006 (3 pgs).
	A1347	NetBank, Inc., "Branch Out: Annual Report 2004," 2004 (150 pgs).
	A1348	NetBank, Inc., "Quick Post: Deposit and Payment Forwarding Service," 2005 (1 pg).
	A1349	NetDeposit Awarded Two Patents for Electronic Check Process, NetDeposit, June 18, 2007, (1 pg).
	A1350	Nikon Digital Camera D300 User's Manual, located on the Internet at: http://download.nikonimglib.comarchive2/iBuJv00Aj97i01y8BrK49XX0Ts69/D300_EU(En)04.pdf (attached as Exhibit 5 from the Defendant Wells Fargo Bank, N.A.'s Answer dated August 14, 2018), 195 pgs.
	A1351	Nixon, Julie et al., "Fiserv Research Finds Banks are Interested in Offering Mobile Deposit Capture as an," Fiserv, Inc. Brookfield, Wis., (Business Wire), (02/20/2009), 2 pgs.
	A1352	Nokia N95 8GB User Guide, copyright 2009, located on the Internet at: https://www.nokia.com/en_int/phones/sites/default/files/user-guides/Nokia_N95_8GB_Extended_UG_en.pdf (excerpts attached as Exhibit 9 from the Defendant Wells Fargo Bank, N.A.'s Answer dat4ed August 14, 2018), 77 pgs.
	A1353	Notice of Allowance from corresponding U.S. Appln No. 11/590,974 dated December 13, 2013 (9 pages)
	A1354	Office Action dated February 24, 2015 from corresponding U.S. Appln No. 14/225,090 (7 pgs).
	A1355	Office Action dated November 1, 2017 from corresponding U.S. Appln No. 15/709,126 (9 pgs)
	A1356	Office Action dated November 7, 2017 from corresponding U.S. Appln No. 15/709,143 (13 pgs)
	A1357	Office Action dated October 18, 2017 from corresponding U.S. Appln No. 15/709,071 (13 pgs)
	A1358	Office Action dated October 6, 2016 from corresponding U.S. Appln No. 14/225,090 (6 pgs).
	A1359	Office Action from corresponding U.S. Appln No. 11/590,974 dated November 12, 2008 (13 pages)

Examiner Signature	/I JUNG LIU/	Date Considered	03/01/2022

ALL REFERENCES CONSIDERED EXCEPT WHERE LINED THROUGH. /I.L./

Information Disclosure Statement

Application No. To be assigned Attorney Docket No. US-0152.11 (14538-668)

EXAMINER INITIAL	Include name of author, title of the article (when appropriate), title of the item (book, magazine, journal, serial, symposium, catalog, etc.), date, page(s), volume-issue number(s), publisher, city and/or country where published.	
	A1360	Office Action from corresponding U.S. Appln No. 11/590,974 dated May 14, 2008 (7 pages)
	A1361	Office Action from corresponding U.S. Appln No. 11/591,003 dated June 27, 2011 (13 pages)
	A1362	Office Action from corresponding U.S. Appln No. 11/591,003 dated December 10, 2009 (14 pages)
	A1363	Office Action from corresponding U.S. Appln No. 11/591,003 dated March 17, 2008 (11 pages)
	A1364	Online Deposit: Frequently Asked Questions, http://www.depositnow.com/faq.html, Copyright 2008 (1 pg).
	A1365	Onlinecheck.com/Merchant Advisors, "Real-Time Check Debit", Merchant Advisors: Retail Check Processing Check Conversion, http://www.onlinecheck/wach/rcareal.htm, Cited in patent no. 7,900,822, as dated 2006 (3 pgs)
	A1366	Oxley, Michael G., from committee on Financial Services; "Check Clearing For The 21st Century Act", 108th Congress, 1st Session House of Representatives report 108-132", June 2003 (20 pgs)
	A1367	Oxley, Michael G., from the committee of conference; "Check Clearing For the 21st Century Act" 108th Congress, 1st Session Senate report 108-291, October 1, 2003 (27 pgs)
	A1368	Palacios, Rafael et al., "Automatic Processing of Brazilian Bank Checks". Cited in patent no. 7,900,822, as dated 2002 (28 pgs)
	A1369	Panasonic Operating Instructions for Digital Camera/Lens Kit Model No. DMC-L1K, https://www.panasonic.com/content/dam/Panasonic/support_manual/Digital_Still_Camera/English_01-vqt0-vqt2/vqt0w95_L1_oi.pdf (attached as Exhibit 4 from the Defendant Wells Fargo Bank N.A.'s Answer dated August 14, 2018), 129 pgs.
	A1370	Patterson, Scott "USAA Deposit@Home – Another WOW moment for Net Banking", NextCU.com, 1/26/2007 (5 pgs)
	A1371	*POP, ARC and BOC-A Comparison*, Federal Reserve Banks, at 1(Jan. 7, 2009) available on the Internet at: https://web.archive.org/web/20090107101808/https://www.frbservices.org/files/eventseducation/pdf/pop_arc_boc_comparison.pdf (attached as Exhibit 13 from the Defendant Wells Fargo Bank, N.A.'s Answer dated August 14, 2018), 3 pgs.
	A1372	Public Law 108-100, 108 Congress; "An Act Check Clearing For the 21st Century Act", October 28, 2003, 117 STAT. 1177 (18 pgs)
	A1373	Rao, Bharat; "The Internet And The Revolution in Distribution: A Cross-Industry Examination"; Technology in Society; 1999; pages 287-306; Vol. 21, No. 3 (20 pgs)
	A1374	Remotedepositcapture, URL:www.remotedepositcapture.com, Cited in patent no. 7,900,822, as dated 2006 (5 pgs)
	A1375	RemoteDepositCapture.com, "PNC Bank to Offer Ease of Online Deposit Service Integrated with QuickBooks to Small Businesses", Remote Deposit Capture News Articles from July 24, 2006, (2 pgs)
	A1376	RemoteDepositCapture.com, Remote Deposit Capture News Articles from July 6, 2006, "BankServ Announces New Remote Deposit Product Integrated with QuickBooks" (3 pgs)
	A1377	Remotedepsitcapture.com, LLC, "Remote Deposit Capture Overview," ROC Overview, http://remotedepositcapture.com/overview/RDC_overview.htm, Cited in patent no. 7,900,822, as dated 3/12/2007 (4 pgs)
	A1378	Richey, J. C. et al., "EE 4530 Check Imaging," Nov. 18, 2008 (10 pgs).
	A1379	Ritzer, J.R. "Hinky Dinky helped spearhead POS, remote banking movement", Bank Systems and Equipment, vol. 21, no. 12, Dec. 1984 (1 pg)

Examiner Signature	/I JUNG LIU/	Date Considered	03/01/2022

ALL REFERENCES CONSIDERED EXCEPT WHERE LINED THROUGH. /I.L./

Information Disclosure Statement

Application No. To be assigned Attorney Docket No. US-0152.11 (14538-668)

EXAMINER INITIAL	Include name of author, title of the article (when appropriate), title of the item (book, magazine, journal, serial, symposium, catalog, etc.), date, page(s), volume-issue number(s), publisher, city and/or country where published.	
	A1380	Rivlin, Alice M. et al., Chair, Vice Chair – Board of Governors, Committee on the Federal Reserve in the Payments Mechanism – Federal Reserve System, " The Federal Reserve in the Payments Mechanism", January 1998 (41 pgs)
	A1381	Rose, Sarah et al., "Best of the We: The Top 50 Financial Websites", Money, New York, Dec. 1999, vol. 28, Iss. 12 (8 pgs)
	A1382	Shelby, Hon. Richard C. (Committee on Banking, Housing and Urban Affairs); "Check Truncation Act of 2003", calendar no. 168, 108th Congress, 1st Session Senate report 108-79, June 2003 (27 pgs)
	A1383	SONY Digital Camera User's Guide/Trouble Shooting Operating Instructions, copyright 2005, located on the Internet at: https://www.sony.co.uk/electronics/support/res/manuals/2654/26544941M.pdf (attached as Exhibit 3 from the Defendant Wells Fargo Bank N.A.'s Answer dated August 14, 2018), 136 pgs.
	A1384	SoyBank Anywhere, "Consumer Internet Banking Service Agreement," December 6, 2004 (6 pgs).
	A1385	Stellin, Susan, "Bank Will Allow Customers to Direct Deposit by iPhone", the New York Times article dated August 9, 2009, obtained from the Internet at: www.nytimes.com/2009/08/10/technology/10check.html, 3 pgs.
	A1386	Steve Bills, "Automated Amount Scanning is Trend in Remote-Deposit," American Banker, (30 August 2005).
	A1387	Teixeira, D., "Comment: Time to Overhaul Deposit Processing Systems," American Banker, Dec. 10, 1998, Vol. 163, No. 235, p. 15 (3 pgs).
	A1388	Thailandguru.com: How and where to Pay Bills @ www.thailandguru.com/paying-bills.html, © 1999-2007 (2 pgs).
	A1389	The Automated Clearinghouse, "Retail Payment Systems; Payment Instruments Clearing and Settlement: The Automated Clearinghouse (ACH)", www.ffiec.gov/ffiecinfobase/booklets/retailretail_02d.html, Cited in patent no. 7,900,822, as dated Dec. 2005 (3 pgs)
	A1390	The Green Sheet 2.0: Newswire, "CO-OP adds home deposit capabilities to suite of check imaging products", www.greensheet.com/newswire.php?newswire_id=8799, March 5, 2008 (2 pgs).
	A1391	Tygar, J.D., Atomicity in Electronic Commerce, In ACM Networker, 2:2, April/May 1998 (12 pgs)
	A1392	Valentine, Lisa, "Remote Deposit Capture Hot Just Got Hotter," ABA Banking Journal, March 2006, pg. 1-9.
	A1393	Vaream, Craig, "Image Deposit Solutions: Emerging Solutions for More Efficient Check Processing," JP Morgan Chase, November 2005 (16 pgs).
	A1394	Wade, Will, "Early Notes: Updating Consumers on Check 21" American Banker 8/10/2004 (3 pgs)
	A1395	Wallison, Peter J., "Wal-Mart Case Exposes Flaws in Banking-Commerce Split", American Banker, Vol. 167. No. 8, Jan. 11, 2002 (3 pgs)
	A1396	Wells Fargo 2005 News Releases, "The New Wells Fargo Electronic Deposit Services Break Through Banking Boundaries In The Age of Check 21", San Francisco March 28, 2005, www.wellsfargo.com/press/3282005_check21Year=2005 (1 pg)
	A1397	Wells Fargo Commercial, "Remote Deposit", www.wellsfargo.com/com/treasury mgmtlreceivables/electronic/remote deposit, Copyright 2008 (1 pg).
	A1398	White, J.M. et al., "Image Thresholding for Optical Character Recognition and Other Applications Requiring Character Image Extraction", IBM J. RES. Development, July 1983, vol. 27, no. 4 (12 pgs)

Examiner Signature	/I JUNG LIU/	Date Considered	03/01/2022

ALL REFERENCES CONSIDERED EXCEPT WHERE LINED THROUGH. /I.L./

Information Disclosure Statement

Application No. To be assigned Attorney Docket No. US-0152.11 (14538-668)

EXAMINER INITIAL	Include name of author, title of the article (when appropriate), title of the item (book, magazine, journal, serial, symposium, catalog, etc.), date, page(s), volume-issue number(s), publisher, city and/or country where published.	
	A1399	Whitney et al., "Reserve Banks to Adopt DSTU X9.37-2003 Format for Check 21 Image Services", American Bankers Association, May 18, 2004, http://www.aba/com/NR/rdonlyres/CBDC1 A5C-43E3-43CC-B733-BE417C638618/35930/DSTUFormat.pdf (2 pages)
	A1400	Wikipedia ®, "Remote Deposit," http://en.wikipedia.org/wiki/Remote_deposit, 2007 (3 pgs).
	A1401	Will Wade, "Early Debate on Remote-Capture Risk," American Banker, (26 May 2004).
	A1402	Windowsfordevices.com, "Software lets camera phone users deposit checks, pay bills", www.windowsfordevices.com/news/NS3934956670.html, January 29,2008 (3 pgs).
	A1403	Wolfe, Daniel, "Check Image Group Outlines Agenda," American Banker, New York, N.Y.: Feb 13, 2009, Vol. 174, Iss. 30, p. 12. (2 pgs).
	A1404	Woody Baird Associated Press, "Pastor's Wife got Scammed -- She Apparently Fell for Overseas Money Scheme," The Commercial Appeal, July 1, 2006, p. A. 1.
	A1405	Zandifar, A., "A Video-Based Framework for the Analysis of Presentations/Posters," International Journal on Document Analysis and Recognition, February 2, 2005, 10 pages.
	A1406	Zhang, C.Y., "Robust Estimation and Image Combining" Astronomical Data Analysis Software and Systems IV, ASP Conference Series, 1995 (5 pgs)
	A1407	Zions Bancorporation, "Moneytech, the technology of money in our world: Remote Deposit," http://www.bankjunior.com/pground/moneytech/remote_deposit.jsp, 2007 (2 pgs).
	A1408	Petition filed by Wells Fargo Bank, N.A. for Covered Business Method Review of Claims 1-20 of US Patent No. 9,818,090, dated November 8, 2018, 90 pgs.
	A1409	Petition filed by Wells Fargo Bank, N.A. for Covered Business Method Review of Claims 1-20 of US Patent No. 9,336,517, dated November 8, 2018, 98 pgs.
	A1410	Petition filed by Wells Fargo Bank, N.A. for Covered Business Method Review of Claims 1-20 of US Patent No. 8,977,571, dated November 8, 2018, 95 pgs.
	A1411	Petition filed by Wells Fargo Bank, N.A. for Covered Business Method Review of Claims 1-23 of US Patent No. 8,699,779, dated November 8, 2018, 101 pgs.
	A1412	"Clearing House Electronic Check Clearing System (CHECCS) Operating Rules," An IP.com Prior Art Database Technical Disclosure, July 29, 2015 (35 pgs).
	A1413	"Quicken Bill Pay", Retrieved from the Internet on Nov. 27, 2007 at: <URL:http://quicken intuit.com/quicken-bill-pay-jhtml>, 2 pgs.
	A1414	"Start to Simplify with Check Imaging a Smarter Way to Bank", Retrieved from the Internet on Nov. 27, 2007, at: <URL: http://www.midnatbank.com/Internet%20Banking/internet_Banking.html>, 3 pgs.
	A1415	Application as filed on June 8, 2018 for US Serial No. 16/018,868, 39 pgs.
	A1416	Declaration of Peter Alexander, Ph.D., CBM2019-0004, November 8, 2018, 180 pgs.
	A1417	"Machine Accepts Bank Deposits", *New York Times*, April 12, 1961, 1 pg.
	A1418	Shah, *Moore's Law*, Continuous Everywhere But Differentiable Nowhere, February 12, 2009, located on the Internet at: http://samjshah.com/2009/02/24/morres-law/, 5 pgs,
	A1419	Rockwell, *The Megapixel Myth,* KenRickwell.com, 2008, located on the Internet at: http://kewrockwell.com.tech/mpmyth.htm, 6 pgs.
	A1420	Gates, *A History of Wireless Standards, Wi-Fi Back to Basics,* Aerohive Blog, July 2015, located on the Internet at: http://blog.aerohive.com/a-history-of-wireless-standards, 5 pgs.

Examiner Signature	/I JUNG LIU/	Date Considered	03/01/2022

ALL REFERENCES CONSIDERED EXCEPT WHERE LINED THROUGH. /I.L./

Information Disclosure Statement

Application No. To be assigned Attorney Docket No. US-0152.11 (14538-668)

EXAMINER INITIAL	Include name of author, title of the article (when appropriate), title of the item (book, magazine, journal, serial, symposium, catalog, etc.), date, page(s), volume-issue number(s), publisher, city and/or country where published.	
	A1421	Apple Reinvents the Phone with iPhone, January 2007, located on the Internet at: https://www.apple.com/newsroom/2007/01/09Apple-Reinvents-the-Phone-with-iPhone/, 4 pgs.
	A1422	Brian Chen et al., *iPhone 3GS Trounces Predecessors, Rivals in Web Browser Speed Test,* Wired, June 24, 2009, located on the Internet at: www.wired.com/2009.3gs-speed/, 10 pgs.
	A1423	Berman, *How Hitchcock Turned a Small Budget Into a Great Triumph*, Time.com, April 29, 2015, located on the Internet at: http://time.com/3823112/alfred-hitchcock-shadow-of-a-doubt, 1 pg.
	A1424	Askey, *Leica Digilux 2 Review (pts.1,3,7)*, Digital Photography Review, May 20, 2004, located on the Internet at: https://www.dpreview.com/reviews/leicadigilux2, 20 pgs.
	A1425	Askey, *Sony Cyber-shot DSC-R1 Review (pts,1,3,7)*, Digital Photography Review, Dec. 6, 2005, located on the Internet at: http://www.dpreview.com.reviews/sonydscr1, 24 pgs.
	A1426	Askey, *Panasonic Lumix DMC-L1 Review (pts.1,3,7)*, Digital Photography Review, April 11, 2007, located on the Internet at: https://www.dpreview.com/reviews/panasonicdmc11, 24 pgs.
	A1427	Askey, Nikon D300 In-depth Review *(pts.1,3,9),* Digital Photography Review, March 12, 2008, located on the Internet at: https://www.preview.com/reviews/nikond300, 24 pgs.
	A1428	Askey, *Canon EOS 40D Review (pts.1,4,10)*, Digital Photography Review, located on the Internet at:http: www.dpreview.com/reviews/canoneos40d, 24 pgs.
	A1429	Joinson et al., *Olympus E-30 Review (pts.1,4,8),* Digital Photography Review, March 24, 2009, located on the Internet at: www.dpreview.com/reviews/olympus30, 6 pgs.
	A1430	Quinn and Roberds, *The Evolution of the Check as a Means of Payment: A Historical Survey*, Federal Reserve Bank of Atlanta, Economic Review, 2008, 30 pgs.
	A1431	Wausau Financial Systems, *Understanding Image Quality & Usability Within a New Environment*, 2006, 22 pgs,
	A1432	*iPhone Store Downloads Top 10 Million in First Weekend,* July 14, 2008, located on the Internet at: http://www.apple.com/newsroom/2008/07/14iPhone-App-Stire-Downloads-Top-10_Million-in-First-Weekend, 3 pgs.
	A1433	Knerr et al., *The A2iA Intercheque System: Courtesy Amount and Legal Amount Recognition for French Checks in Automated Bankcheck Processing 43-86,* Impedove et al. eds., 1997, 50 pgs.
	A1434	149 Cong. Rec. H9289, October 8, 2003, 6 pgs.
	A1435	*Check Clearing for the 21st Century Act*, H. R. Rep. No. 108-132, June 2, 2003, 20 pgs.
	A1436	ITU-R-M.1225, *Guides for Evaluation of Radio Transmission Technologies for IMT-2000*, dated 1997, located on the Internet at: https://www.itu.int/dms-pubrec/itu-r/rec/m/R-REC-M,1225-0-199702-I!!PDF-E.pdf, 60 pgs.
	A1437	E. MacKenzie, *Photography Made Easy*, copyright 1845, 80 pgs.
	A1438	12 CFR § 229.51 and Appendix D to Part 229 (1-1-05 edition), 3 pgs.
	A1439	Excerpts from American National Standard for Financial Services, ANS, X9.100-140-2004-Specifications for an Image Replacement Document – IRD, October 1, 2004, 16 pgs.
	A1440	Sumits, *Major Mobile Milestones – The Last 15 Years, and the Next Five*, Cisco Blogs, February 3, 2016, located on the Internet at: https://blogs.cisco.com/sp/mobile-vni-major-mobile-milesrones-the-last15-years-and-the-next-five, 12 pgs.

Examiner Signature	/I JUNG LIU/	Date Considered	03/01/2022

ALL REFERENCES CONSIDERED EXCEPT WHERE LINED THROUGH. /I.L./

Information Disclosure Statement

Application No. To be assigned Attorney Docket No. US-0152.11 (14538-668)

EXAMINER INITIAL	Include name of author, title of the article (when appropriate), title of the item (book, magazine, journal, serial, symposium, catalog, etc.), date, page(s), volume-issue number(s), publisher, city and/or country where published.	
	A1441	*Apple Announces the New iPhone 3GS – The Fastest, Most Powerful iPhone Yet*, June 8, 2009, located on the Internet at: http://www.apple.com.rensroom/2009/06/08Apple-Annpounces-the-New-iPhone-3GS-The Fastest-Most-Powerful-iPhone-Yet, 4 pgs.
	A1442	MOTOMANUAL, MOTOROKR-E6-GSM-English for wireless phone, copyright 2006, 144 pgs.
	A1443	Patent Disclaimer for US Patent No, 8,699,779, filed on March 4, 2019, 2 pgs.
	A1444	Patent Disclaimer for US Patent No, 8,977,571, filed on February 20, 2019, 2 pgs.
	A1445	Patent Disclaimer for US Patent No, 9,336,517, filed on March 4, 2019, 2 pgs.
	A1446	Patent Disclaimer for US Patent No, 9,818,090, filed on February 20, 2019, 2 pgs.
	A1447	CBM2019-00002 Patent No. 9,818,090, United Services Automobile Association (USAA)'s Patent Owner Preliminary Response, dated February 20, 2019, 75 pgs.
	A1448	CBM2019-00002 Patent No. 9,818,090, Declaration of Tim Crews In Support of Patent Owner Preliminary Response, dated February 20, 2019, 8 pgs.
	A1449	CBM2019-00002 Patent No. 9,818,090, Declaration of Matthew Calman In Support of Patent Owner Preliminary Response, dated February 20, 2019, 14 pgs.
	A1450	CBM2019-00002 Patent No. 9,818,090, Katie Knight Videotape Deposition Transcript, dated February 8, 2019, 27 pgs.
	A1451	CBM2019-00002 Patent No. 9,818,090, Peter Alexander, Ph.D., Oral and Videotaped Deposition, dated January 23, 2019, 27 pgs.
	A1452	CBM2019-00002 Patent No. 9,818,090, United Services Automobile Association (USAA)'s Updated Exhibit List, dated March 19, 2019, 8 pgs.
	A1453	CBM2019-00003 Patent No. 9,336,517, United Services Automobile Association (USAA)'s Patent Owner Preliminary Response, dated March 4, 2019, 91 pgs.
	A1454	CBM2019-00003 Patent No. 8,699,779, Declaration of Matthew Calman In Support of Patent Owner Preliminary Response, dated March 4, 2019, 15 pgs.
	A1455	CBM2019-00003 Patent No. 9,336,517, Katie Knight Videotape Deposition Transcript, dated February 8, 2019, 27 pgs.
	A1456	CBM2019-00003 Patent No. 9,336,517, Peter Alexander, Ph.D., Oral and Videotaped Deposition, dated January 23, 2019, 27 pgs.
	A1457	CBM2019-00003 Patent No. 9,336,517, United Services Automobile Association (USAA)'s Updated Exhibit List Pursuant to 37 CFR 42.63(e), dated March 19, 2019, 8 pgs.
	A1458	CBM2019-00003 Patent No. 9,336,517, Petitioner's Reply Brief to Patent Owner Preliminary Response Pursuant to Authorization Provided in Paper No. 14, dated April 10, 2019, 10 pgs.
	A1459	CBM2019-00004 Patent No. 8,977,571, Declaration of Tim Crews In Support of Patent Owner Preliminary Response, dated February 20, 2019, 8 pgs.
	A1460	CBM2019-00004 Patent No. 8,977,571, United Services Automobile Association (USAA)'s Patent Owner Preliminary Response, dated February 20, 2019, 99 pgs.
	A1461	CBM2019-00004 Patent No. 8,977,571, Declaration of Matthew Calman In Support of Patent Owner Preliminary Response, dated February 20, 2019, 14 pgs.
	A1462	CBM2019-00004 Patent No. 8,977,571, United Services Automobile Association (USAA)'s Updated Exhibit List Pursuant to 37 CFR 43.63(e), dated March 19, 2019, 8 pgs.
	A1463	CBM2019-00005 Patent No. 8,699,779, United Services Automobile Association's (USAA)'s Patent Owner Preliminary Response, dated March 4, 2019, 103 pgs.

Examiner Signature	/I JUNG LIU/	Date Considered	03/01/2022

ALL REFERENCES CONSIDERED EXCEPT WHERE LINED THROUGH. /I.L./

Information Disclosure Statement

Application No. To be assigned Attorney Docket No. US-0152.11 (14538-668)

EXAMINER INITIAL	Include name of author, title of the article (when appropriate), title of the item (book, magazine, journal, serial, symposium, catalog, etc.), date, page(s), volume-issue number(s), publisher, city and/or country where published.	
	A1464	CBM2019-00005 Patent No. 8,699,779, Katie Knight Videotape Deposition Transcript, dated February 8, 2019, 27 pgs.
	A1465	CBM2019-00005 Patent No. 8,699,779 Matthew A. Calman Declaration, dated March 4, 2019, 15 pgs.
	A1466	CBM2019-00005 Patent No. 8,699,779 Peter Alexander, Ph.D., Oral and Videotaped Deposition, dated January 23, 2019, 27 pgs.
	A1467	CBM2019-00027 Patent No. 9,224,136 Declaration of Peter Alexander, Ph.D., dated March 28, 2019, 147 pgs.
	A1468	CBM2019-00027 Patent No. 9,224,136 Petition For Covered Business Method Review of Claims 1-3, 5-9, 11-16 and 18 of US Patent No, 9,224,136, dated March 28, 2019, 93 pgs.
	A1469	CBM2019-00027 Patent No. 9,224,136 Notice of Filing Date Accorded to Petition and Time for Filing Patent Owner Preliminary Response, dated April 8, 2019, 3 pgs.
	A1470	CBM2019-00028 Patent No. 10,013,681, Plaintiff United Services Automobile Association (USAA) Preliminary Claim Constructions And Extrinsic Evidence, dated March 15, 2019, 74 pgs.
	A1471	CBM2019-00028 Patent No. 10,013,681, Declaration of Peter Alexander, Ph.D., dated March 28, 2019, 94 pgs.
	A1472	CBM2019-00028 Patent No. 10,013,681, Petition For Covered Business Method Review of Claims 1-30 of US Patent No, 10,013,681, dated March 28, 2019, 99 pgs.
	A1473	CBM2019-00028 Patent No. 10,013,681, Petitioner's Updated Exhibit List (as of April 1, 2019) for US Patent No, 10,013,681, dated April 1, 2019, 5 pgs.
	A1474	CBM2019-00028 Patent No. 10,013,681, Notice of Filing Date Accorded To Petition and Time For Filing Patent owner Preliminary Response for US Patent No, 10,013,681, dated April 8, 2019, 3 pgs.
	A1475	CBM2019-00029 Patent No. 10,013,605, Declaration of Peter Alexander, Ph.D., dated March 28, 2019, 76 pgs.
	A1476	CBM2019-00029 Patent No. 10,013,605, Petition For Covered Business Method Review of Claims 1-3, 5-14, 16-29 of US Patent No, 10,013,605, dated March 28, 2019, 88 pgs.
	A1477	CBM2019-00029 Patent No. 10,013,605, Plaintiff United Services Automobile Association (USAA) Preliminary Claim Constructions And Extrinsic Evidence, dated March 15, 2019, 74 pgs.
	A1478	IPR2019-00815 Patent No. 9,818,090, Petition For *Inter Parties* Review of Claims 109 of U.S. Patent No. 9,818,090, dated March 20, 2019, 56 pgs.
	A1479	IPR2019-00815 Patent No. 9,818,090, Declaration of Peter Alexander, PhD. as filed in the IPR on March 20, 2019, 99 pgs.
	A1480	IPR2019-00815 Patent No. 9,818,090, Notice of Filing Date Accorded to Petition and Time for Filing Patent Owner Preliminary Response, dated March 27, 2019, 5 pgs.
	A1481	IPR2019-00815 Patent No. 9,818,090, Exhibit B Proposed Claim Constructions for the '571, '090, '779 and '517 Patents, filed on 2/28/19, 10 pgs,
	A1482	ABA Routing System Transit Number, Wikipedia, dated Sept. 27, 2006, 3pgs.
	A1483	Accredited Standards Committee Technical Report TR 33-2006, dated August 28, 2006, 75 pgs.
	A1484	ANS X9.100-140-2004, "Specification for an Image Replacement document – IRD", American Standard for Financial Services, Oct. 1, 2004, 15 pgs.
	A1485	ANSI News, "Check 21 Goes Into Effect October 28, 2004, dated October 25, 2004, 1 pg.

Examiner Signature	/I JUNG LIU/	Date Considered	03/01/2022

ALL REFERENCES CONSIDERED EXCEPT WHERE LINED THROUGH. /I.L./

Information Disclosure Statement

Application No. To be assigned Attorney Docket No. US-0152.11 (14538-668)

EXAMINER INITIAL	Include name of author, title of the article (when appropriate), title of the item (book, magazine, journal, serial, symposium, catalog, etc.), date, page(s), volume-issue number(s), publisher, city and/or country where published.	
	A1486	ANSI, "Return Reasons for Check Image Exchange of IRDS", dated May 6, 2016, 23 pgs.
	A1487	ANSI, "Specifications For Electronic Exchange of Check and Image Data", dated July 11, 2006, 230 pgs.
	A1488	ANSI X9.7-1999(R2007), "Bank Check Background and Convenience Amount Field Specification, dated July 11, 2007, 86 pgs.
	A1489	ASCX9, "Specification for Electronic Exchange of Check and Image Data", date March 31, 2003. 156 pgs.
	A1490	Bankers' Hotline, "Training Page: Learning the Bank Numbering System", Copyright 2004, 2 pgs.
	A1491	BrainJar Validation Algorithms, archived on March 16, 2016 from BrainJar.com, 2 pgs.
	A1492	Canon White Paper, "Two Words Every Business Should Know- Remote Deposit", dated 2005, 7 pgs.
	A1493	CBR online, "Diebold launches ATM depository technology", October 4, 2007, 5 pgs.
	A1494	Cheq Information Technology White Paper, "Teller Scanner Performance and Scanner Design: Camera Position Relative to the Feeder", dated 2005, 7 pgs.
	A1495	De Jesus, Angie et al., "Distributed Check Processing In a Check 21 Environment", dated November, 2004, 22 pgs.
	A1496	Federal Reserve Adoption of DSTU X9.37-2003, "Image Cash Letter Customer Documentation Version 1.8, dated October 1, 2008, 48 pgs.
	A1497	Fielding, R. et al, "RFC-2616 – Hypertext Transfer Protocol", Network Working Group, The Internet Society copyright 1999, 177 pgs.
	A1498	Hill, Simon, "From J-Phone to Lumina 1020: A Complete History of the Camera Phone", dated August 11, 2013, 19 pgs.
	A1499	Instrument - Definition from the Merriam-Webster Online Dictionary, dated March 2, 2019, 1 pg.
	A1500	Instrument - Definition of instrument from the Oxford Dictionaries (British & World English), dated July 2, 2017, 44 pgs.
	A1501	iPhone Application Programming Guide Device Support, dated April 26, 2009, 7 pgs.
	A1502	iPhone Announces the New iPhone 3gs – The Fastest, Most Powerful iPhone Yet, Press Release dated Jun 8, 2009, 4 pgs.
	A1503	Klein, Robert, Financial Services Technology, "Image Quality and Usability Assurance: Phase 1 Project", dated July 23, 2004, 67 pgs.
	A1504	Lange, Bill, "Combining Remote Capture and IRD Printing, A Check 21 Strategy For Community and Regional Banks", dated 2005, 25 pgs.
	A1505	Lee, Jeanne, "Mobile Check Deposits: Pro Tips to Ensure They Go Smoothly", dated February 19, 2016, 6 pgs.
	A1506	Meara, Bob, "State of Remote Deposit Capture 2015: Mobile Is the New Scanner", Dated May 26, 2015, obtained from the Internet at: https://www.celent.com/insights/57842967, 3 pgs.
	A1507	Meara, Bob, "State of Remote Deposit Capture 2015 Mobile Is the New Scanner", dated May 2015, 56 pgs.
	A1508	Meara, Bob,"USAA's Mobile Remote Deposit Capture", Dated June 26, 2009, 2 pgs.
	A1509	Mitek's Mobile Deposit Processes More Than Two Billion Checks, $1.5 Trillion in Cumulative Check Value, dated March 18, 2018, 2 pgs.
	A1510	Mitek, "Video Release – Mitek MiSnap ™ Mobile Auto Capture Improves Mobile Deposit® User Experience at Ten Financial Institutions", dated July 15, 2014, 2 pgs.
	A1511	NCR, "Mobile Remote Deposit Capture (RDC), copyright 2011, 8 pgs.

Examiner Signature	/I JUNG LIU/	Date Considered	03/01/2022

ALL REFERENCES CONSIDERED EXCEPT WHERE LINED THROUGH. /I.L./

Information Disclosure Statement

Application No. To be assigned Attorney Docket No. US-0152.11 (14538-668)

EXAMINER INITIAL	Include name of author, title of the article (when appropriate), title of the item (book, magazine, journal, serial, symposium, catalog, etc.), date, page(s), volume-issue number(s), publisher, city and/or country where published.	
	A1512	Nokia N90 Review Digital Trends, dated February 11, 2019, obtained from the Internet at: https://www.digitaltrends.com/cell-phone-reviews/nokia-n90-review/, 11 pgs.
	A1513	Nokia N95 8GB User Guide, copyright 2009, (from the Wells Fargo Bank, N.A. IPR2019-00815, filed on March 20, 2019), Part 1 of 3, 67 pgs.
	A1514	Nokia N95 8GB User Guide, copyright 2009, (from the Wells Fargo Bank, N.A. IPR2019-00815, filed on March 20, 2019), Part 2 of 3, 60gs.
	A1515	Nokia N95 8GB User Guide, copyright 2009, (from the Wells Fargo Bank, N.A. IPR2019-00815, filed on March 20, 2019), Part 3 of 3, 53 pgs.
	A1516	Patel, Kunur, Ad Age, "How Mobile Technology Is Changing Banking's Future", dated September 21, 2009, 3 pgs.
	A1517	Remote Deposit Capture Basic Requirements, dated August 22, 2009, 1 pg.
	A1518	Remote Deposit Capture.com Scanner Matrix, dated October 21, 2011, 3 pgs.
	A1519	Rowles, Tony, "USAA-v. Wells Fargo No. 2:16-cv-245-JRGL e-mail correspondence dated January 24, 2019, 2 pgs.
	A1520	Sechrest, Stuart et al., "Windows XP Performance", Microsoft, dated 6/1/2001, 20 pgs.
	A1521	Spenser, Harvey, "White Paper Check 21 Controlling Image Quality At The Point of Capture", dated 2004, 7 pgs.
	A1522	Timothy R. Crews list of Patents, printed from the United States Patent and Trademark Office on Feb. 13, 2019, 7 pgs.
	A1523	Van Dyke, Jim, "2017 Mitek Mobile Deposit Benchmark Report", copyright 2017, 50 pgs.
	A1524	WAUSAU, "Understanding Image Quality & Usability Within a New Environment", copyright 2019, 1 pg.
	A1525	Whitney, Steve et al., "A Framework For Exchanging Image Returns", dated July 2001, 129 pgs.
	A1526	CBM2019-00005 Patent No. 8,699,779, Patent Owner's Sur-Reply Brief to Petitioner's Reply Brief to Patent Owner Preliminary Response Pursuant to Authorization Provided in Paper No. 15, dated May 1, 2019, 7 pgs.
	A1527	CBM2019-00004 Patent No. 8,977,571, Defendant's Claim Construction Brief and supporting exhibits, United Services Automobile Association v. Wells Fargo Bank, N.A., Civil Action No. 2:18-cv-245, dated April 25, 2019, 186 pgs.
	A1528	USAA's Opening Claim Construction Brief, United Services Automobile Association v. Wells Fargo Bank, N.A., Civil Action No. 2:18-cv-245, dated April 11, 2019, 32 pgs.
	A1529	CBM2019-00004 Patent No. 8,977,571, Patent Owner's Sur-Reply Brief to Petitioner's Reply Brief to Patent Owner Preliminary Response Pursuant to Authorization Provided in Paper 14, dated April 30, 2019, 7 pgs.
	A1530	USAA's Reply to Claim Construction Brief, United Services Automobile Association v. Wells Fargo Bank, N.A., Civil Action No. 2:18-cv-245, dated May 2, 2019, 15 pgs.
	A1531	CBM2019-00005 Patent No. 8,699,779, Patent Owner's Sur-Reply Brief Pursuant to Petitioner's Reply Brief to Patent Owner Preliminary Response Pursuant to Authorization Provided in Paper 15, dated May 1, 2019, 7 pgs.
	A1532	P.R. 4-3 Joint Claim Construction and Pre-Hearing Statement, United Services Automobile Association v. Wells Fargo Bank, N.A., Civil Action No. 2:18-cv-366, dated April 5, 2019, 190 pgs.
	A1533	Defendant Wells Fargo Bank, N.A.'s Amended Answer, Affirmative Defenses, and Counterclaims to Plaintiff's Complaint, United Services Automobile Association v. Wells Fargo Bank, N.A., Civil Action No. 2:18-cv-366, dated April 12, 2019, 32 pgs.

Examiner Signature	/I JUNG LIU/	Date Considered	03/01/2022

ALL REFERENCES CONSIDERED EXCEPT WHERE LINED THROUGH. /I.L./

Information Disclosure Statement

Application No. To be assigned Attorney Docket No. US-0152.11 (14538-668)

EXAMINER INITIAL	Include name of author, title of the article (when appropriate), title of the item (book, magazine, journal, serial, symposium, catalog, etc.), date, page(s), volume-issue number(s), publisher, city and/or country where published.	
	A1534	Plaintiff and Counterclaim Defendant's Answer to Defendant and Counterclaims Plaintiff's Amended Answer, Affirmative Defenses, & Counterclaims, United Services Automobile Association v. Wells Fargo Bank, N.A., Civil Action No. 2:18-cv-366, dated April 26, 2019, 18 pgs.
	A1535	Plaintiff and Counterclaim Defendant's Answer to Defendant and Counterclaims Plaintiff's Amended Answer, Affirmative Defenses, & Counterclaims, United Services Automobile Association v. Wells Fargo Bank, N.A., Civil Action No. 2:18-cv-245, dated March 21, 2019, 36 pgs.
	A1536	USAA's Reply Claim Construction Brief, United Services Automobile Association v. Wells Fargo Bank, N.A., Civil Action No. 2:18-cv-245, dated May 2, 2019, 227 pgs.
	A1537	Parties' P.R. 4-5(D) Joint Claim Construction Chart, United Services Automobile Association v. Wells Fargo Bank, N.A., Civil Action No. 2:18-cv-245, dated May 9, 2019, 25 pgs.
	A1538	CBM2019-00002 Patent No. 9,818,090, Decision Denying Institution of Covered Business Method Patent Review *37 C.F.R. § 42.208*, dated April 26, 2019, 5 pgs.
	A1539	CBM2019-00003 Patent No. 9,336,517, Decision Denying Institution of Covered Business Method Patent Review *37 C.F.R. § 42.208*, dated June 3, 2019, 28 pgs.
	A1540	CBM2019-00004 Patent No. 8,977,571, Decision Denying Institution of Covered Business Method Patent Review *37 C.F.R. § 42.208*, dated May 15, 2019, 33 pgs.
	A1541	CBM2019-00005 Patent No. 8,699,779, Decision Denying Institution of Covered Business Method Patent Review *37 C.F.R. § 42.208*, dated June 3, 2019, 27 pgs.
	A1542	USAA's Opening Claim Construction Brief, filed in Civil Action No. 2:18-CV-366, dated May 17, 2019, 670 pgs.
	A1543	Defendant's Claim Construction Brief, filed in Civil Action No. 2:18-CV-366, dated May 31, 2019, 111 pgs.
	A1544	Plaintiff's Notice of Filing Claim Construction Presentation, filed in Civil Action No. 2:18-CV-245, dated May 23, 2019, 106 pgs.
	A1545	IPR2019-01081 Patent No. 9,336,517, Petition for *Inter Partes* Review of Claims 1, 5-10, 12-14, 17-20 of US Patent No. 9,336,517, dated June 5, 2019, 78 pgs.
	A1546	IPR2019-01082 Patent No. 8,977,571, Petition for *Inter Partes* Review of Claims 1-13 Patent No. 9,336,517, dated June 5, 2019, 75 pgs.
	A1547	IPR2019-01083 Patent No. 8,699,779, Petition for *Inter Partes* Review of Claims 1-18 Patent No. 9,336,517, dated June 5, 2019, 74 pgs.
	A1548	Plaintiff's Notice of Decisions Denying Institution of Covered Business Method Patent Review, filed in Civil Action No. 2:18-CV-245, dated June 6, 2019, 61 pgs.
	A1549	Claim Construction Memorandum Opinion and Order, filed in Civil Action No. 2:18-CV-245, dated June 13, 2019, 48 pgs.
	A1550	Parties' P.R.4-5(D) Join Claim Construction Chart, filed in Civil Action No. 2:18-CV-245, dated June 14, 2019, 28 pgs.
	A1551	Defendant's Claim Construction Brief, filed in Civil Action No. 2:18-CV-366, dated May 31, 2019, 111 pgs.
	A1552	USAA's Reply Claim Construction Brief, filed in Civil Action No. 2:18-CV-366, dated June 7, 2019, 40 pgs.
	A1553	Wells Fargo's Objections to Magistrate Judge Payne's Claim Construction Memorandum and Order, filed in Civil Action No. 2:18-CV-245, dated June 27, 2019, 7 pgs.
	A1554	USAA's Objections to Magistrate Judge Payne's Claim Construction Memorandum Opinion and Order, filed in Civil Action No. 2:18-CV-245, dated June 27, 2019, 6 pgs.

Examiner Signature	/I JUNG LIU/	Date Considered	03/01/2022

ALL REFERENCES CONSIDERED EXCEPT WHERE LINED THROUGH. /I.L./

Information Disclosure Statement

Application No. To be assigned Attorney Docket No. US-0152.11 (14538-668)

EXAMINER INITIAL	Include name of author, title of the article (when appropriate), title of the item (book, magazine, journal, serial, symposium, catalog, etc.), date, page(s), volume-issue number(s), publisher, city and/or country where published.	
	A1555	Parties' P.R. 4-5(D) Joint Claim Construction Chart, filed in Civil Action No. 2:18-CV-366, dated June 18, 2019, 27 pgs.
	A1556	IPR2019-00815, Invalidity Chart, uploaded on June 27, 2019, 94 pgs.
	A1557	IPR2019-00815, United Services Automobile Association ("USAA")'s Patent Owner Preliminary Response, dated July 27, 2019, 66 pgs.
	A1558	IPR2019-00815, Supplemental Invalidity Chart, dated on June 27, 2019, 16 pgs.
	A1559	IPR2019-00815, Declaration of Matthew A. Calman in Support of Patent Owner Preliminary Response, dated June 27, 2019, 25 pgs.

1. PRIORITY INFORMATION:

☒ This application claims priority under 35 USC §120 to the following United States patent application(s): 16,165,622; 16/025,679; 15/663,284; 14/225,090 and 11/590,974. In accordance with 37 CFR §1.98(d), copies of the references cited herein which were submitted to, or cited by, the office, in compliance with 37 CFR §1.98(a)-(c) in the earlier application are not provided herewith. The Examiner is directed to those references cited in all Information Disclosure Statements filed in the priority United States patent application(s) cited above in addition to the references cited herein.

2. CERTIFICATIONS: (CHECK ALL THAT APPLY)

A. Certifications For 37 CFR §1.97(c) or 37 CFR §1.97(d):

☐ Applicant hereby certifies pursuant to 37 CFR §1.97(e)(1) that each item of information in this Information Disclosure Statement was first cited in any communication from a foreign patent office in a counterpart foreign application not more than three months prior to the filing of this Information Disclosure Statement.

☐ Applicant hereby certifies pursuant to 37 CFR §1.97(e)(2) that no item of information contained in this Information Disclosure Statement was cited in a communication from a foreign patent office in a counterpart foreign application, and, to the knowledge of the undersigned after making reasonable inquiry, no item of information contained in this Statement was known to any individual designated in 37 CFR §1.56(c), more than three months prior to the filing of this Information Disclosure Statement.

B. For Patent Term Adjustment Purposes:

☐ For purposes of 37 CFR §1.704(d)(i) or 37 CFR §1.704(d)(ii), Applicant hereby certifies that each item of information contained in this Information Disclosure Statement was first cited in any communication from a patent office in a counterpart foreign or international application or from the Office or is a communication that was issued by a patent office in a counterpart foreign or international application or by the Office, and that this communication was not received by any individual designated in 37 CFR §1.56(c) more than thirty days prior to the filing of this Information Disclosure Statement.

3. FEE INFORMATION: (CHECK IF FEE REQUIRED)

☐ Applicant has calculated a processing fee in the amount of $_____ to be due under 37 CFR §1.17(p) in connection with the filing of this Information Disclosure Statement. Applicant authorizes charging the fee to Deposit Account 50-4184.

☐ The Director is hereby authorized to charge any fee deficiency associated with the filing of this Information Disclosure Statement to Deposit Account 50-4184.

Pursuant to the undersigned attorney's obligation and duties under 37 CFR §§ 1.56 and 1.98(a)(3) and (c), either English language abstracts, partial translations, or full translations are included for patent documents which are not in English for the express purpose of providing a concise explanation of the references to the Patent and Trademark Office with the opportunity to evaluate the same. Applicant respectfully requests the Examiner's consideration of the above reference(s) and entry thereof into the record of this application.

Examiner Signature	/I JUNG LIU/	Date Considered	03/01/2022

ALL REFERENCES CONSIDERED EXCEPT WHERE LINED THROUGH. /I.L./

Information Disclosure Statement

Application No. To be assigned Attorney Docket No. US-0152.11 (14538-668)

By submitting this Statement, Applicant is attempting to fully comply with the duty of candor and good faith mandated by 37 CFR §1.56. As such, this Statement is not intended to constitute an admission that any of the enclosed references, or other information referred to therein, constitutes "prior art" or is otherwise "material to patentability," as that phrase is defined in 37 CFR §1.56(a).

Respectfully submitted,

July 10, 2019
Date

Kent E. Genin (Reg. No. 37,834)

Examiner Signature	/I JUNG LIU/	Date Considered	03/01/2022

ALL REFERENCES CONSIDERED EXCEPT WHERE LINED THROUGH. /I.L./

CERTIFICATE OF EFS FILING UNDER 37 CFR §1.8

I hereby certify that this correspondence is being electronically transmitted to the United States Patent and Trademark Office, Commissioner for Patents, via the EFS pursuant to 37 CFR §1.8 on the below date:

Date: August 27, 2020 Name: Scott W. Brim (Reg. No. 51,500) Signature: /Scott W. Brim/

SUPPLEMENTAL INFORMATION DISCLOSURE STATEMENT BY APPLICANT (Not for submission under 37 CFR 1.99)		
	Application Number	16/507,595
	Filing Date	July 10, 2019
	First Named Inventor	Charles Lee Oakes
	Art Unit	3697
	Confirmation Number	4037
	Examiner Name	Daniel S. Felten
	Attorney Docket No.	US-0152.11 (14538-668)

In accordance with the duty of disclosure, Applicant(s) hereby cites the following references:

PATENT REFERENCES

EXAMINER INITIAL		DOCUMENT NUMBER Number-Kind Code (if known)	DATE	NAME
	E1	2003/0105714 A1	06/05/2003	Alarcon-Luther et al.
	E2	2004/0171371 A1	09/02/2004	Paul
	E3	2007/0183652 A1	08/09/2007	Backstrom et al.
	E4	6,178,270 B1	01/23/2001	Taylor et al.
	E5	2010/0078472 A1	04/01/2010	Lin et al.
	E6	2010/0128131 A1	05/27/2010	Tenchio et al.
	E7	8,768,038 B1	07/01/2014	Sherman et al.
	E8	10,574,879 B1	02/25/2020	Prasad et al.
	E9	10,621,559 B1	04/14/2020	Oakes, III et al.
	E10	10,621,660 B1	04/14/2020	Medina et al.
	E11	10,706,466 B1	07/07/2020	Ethington et al.

FOREIGN PATENT REFERENCES

EXAMINER INITIAL		DOCUMENT NUMBER Number-Kind Code (if known)	DATE	COUNTRY	TRANSLATION YES OR NO
	E12	JP 2006-174105 A	06/29/2006	Japan	Abstract
	E13	JP 2004-23158 A	01/22/2004	Japan	Abstract

OTHER ART – NON PATENT LITERATURE DOCUMENTS

EXAMINER INITIAL		Include name of author, title of the article (when appropriate), title of the item (book, magazine, journal, serial, symposium, catalog, etc.), date, page(s), volume-issue number(s), publisher, city and/or country where published.

1. PRIORITY INFORMATION:

☐ This application claims priority under 35 USC §120 to the following United States patent application(s):_____. In accordance with 37 CFR §1.98(d), copies of the references cited herein which were submitted to, or cited by, the office, in compliance with 37 CFR §1.98(a)-(c) in the earlier application are not provided herewith. The Examiner is directed to those references cited in all Information

Examiner Signature	/I JUNG LIU/	Date Considered	03/01/2022

ALL REFERENCES CONSIDERED EXCEPT WHERE LINED THROUGH. /I.L./

Information Disclosure Statement

Application No. 16/507,595 Attorney Docket No. US-0152.11 (14538-668)

Disclosure Statements filed in the priority United States patent application(s) cited above in addition to the references cited herein.

2. CERTIFICATIONS: (CHECK ALL THAT APPLY)

A. Certifications For 37 CFR §1.97(c) or 37 CFR §1.97(d):

☐ Applicant hereby certifies pursuant to 37 CFR §1.97(e)(1) that each item of information in this Information Disclosure Statement was first cited in any communication from a foreign patent office in a counterpart foreign application not more than three months prior to the filing of this Information Disclosure Statement.

☐ Applicant hereby certifies pursuant to 37 CFR §1.97(e)(2) that no item of information contained in this Information Disclosure Statement was cited in a communication from a foreign patent office in a counterpart foreign application, and, to the knowledge of the undersigned after making reasonable inquiry, no item of information contained in this Statement was known to any individual designated in 37 CFR §1.56(c), more than three months prior to the filing of this Information Disclosure Statement.

B. For Patent Term Adjustment Purposes:

☐ For purposes of 37 CFR §1.704(d)(i) or 37 CFR §1.704(d)(ii), Applicant is hereby submitting concurrently with this Information Disclosure Statement a completed Form PTO/SB/133 that certifies that each item of information contained in this Information Disclosure Statement was first cited in any communication from a patent office in a counterpart foreign or international application or from the Office or is a communication that was issued by a patent office in a counterpart foreign or international application or by the Office, and that this communication was not received by any individual designated in 37 CFR §1.56(c) more than thirty days prior to the filing of this Information Disclosure Statement.

3. FEE INFORMATION: (CHECK IF FEE REQUIRED)

☐ Applicant has calculated a processing fee in the amount of _____ to be due under 37 CFR §1.17(p) in connection with the filing of this Information Disclosure Statement. Applicant authorizes charging the fee to Deposit Account 50-4184.

☒ The Director is hereby authorized to charge any fee deficiency associated with the filing of this Information Disclosure Statement to Deposit Account 50-4184.

Pursuant to the undersigned attorney's obligation and duties under 37 CFR §§ 1.56 and 1.98(a)(3) and (c), either English language abstracts, partial translations, or full translations are included for patent documents which are not in English for the express purpose of providing a concise explanation of the references to the Patent and Trademark Office with the opportunity to evaluate the same. Applicant respectfully requests the Examiner's consideration of the above reference(s) and entry thereof into the record of this application.

By submitting this Statement, Applicant is attempting to fully comply with the duty of candor and good faith mandated by 37 CFR §1.56. As such, this Statement is not intended to constitute an admission that any of the enclosed references, or other information referred to therein, constitutes "prior art" or is otherwise "material to patentability," as that phrase is defined in 37 CFR §1.56(a).

Respectfully submitted,

August 27, 2020 /Scott W. Brim/
Date Scott W. Brim (Reg. No. 51,500)

Examiner Signature	/I JUNG LIU/	Date Considered	03/01/2022

ALL REFERENCES CONSIDERED EXCEPT WHERE LINED THROUGH. /I.L./

CERTIFICATE OF EFS FILING UNDER 37 CFR §1.8

I hereby certify that this correspondence is being electronically transmitted to the United States Patent and Trademark Office, Commissioner for Patents, via the EFS pursuant to 37 CFR §1.8 on the below date:

Date: October 21, 2020 Name: Scott W. Brim (Reg. No. 51,500) Signature: /Scott W. Brim/

SUPPLEMENTAL INFORMATION DISCLOSURE STATEMENT BY APPLICANT (Not for submission under 37 CFR 1.99)		
	Application Number	16/507,595
	Filing Date	July 10, 2019
	First Named Inventor	Charles Lee Oakes
	Art Unit	3697
	Confirmation Number	4037
	Examiner Name	I. Jung Liu
	Attorney Docket No.	US-0152.11 | 14538-668

In accordance with the duty of disclosure, Applicant(s) hereby cites the following references:

PATENT REFERENCES

EXAMINER INITIAL		DOCUMENT NUMBER Number-Kind Code (if known)	DATE	NAME
	F1	6,697,091 B1	02/24/2004	Rzepkowski et al.
	F2	6,044,883 B1	09/13/2005	Abrahams
	F3	7,389,912 B2	06/24/2008	Starrs
	F4	8,341,077 B1	12/25/2012	Nichols et al.
	F5	10,713,629 B1	07/14/2020	Medina, III
	F6	10,719,815 B1	07/21/2020	Oakes, III et al.
	F7	10,769,598 B1	09/08/2020	Oakes, III et al.
	F8	2004/0205459 A1	10/14/2004	Green
	F9	2005/0100216 A1	05/12/2005	Myers et al.

FOREIGN PATENT REFERENCES

EXAMINER INITIAL		DOCUMENT NUMBER Number-Kind Code (if known)	DATE	COUNTRY	TRANSLATION YES OR NO
	F10	WO 2005/124657 A1	12/29/2005	WIPO	

OTHER ART – NON PATENT LITERATURE DOCUMENTS

EXAMINER INITIAL	Include name of author, title of the article (when appropriate), title of the item (book, magazine, journal, serial, symposium, catalog, etc.), date, page(s), volume-issue number(s), publisher, city and/or country where published.	
	F11	Higgins, Ray et al., "Working With Image Cash Letters (ISLs) X9.37, 180 or 187 files", *All My Papers*, 2009, 36 pgs.
	F12	X9.100-180, "The New ICL Standard is Published", *All My Papers*, 2006, 3 pgs.
	F13	X9.37 Specifications | X9Ware LLC, dated 2018, 3 pgs.
	F14	"Getting Started with ICLs aka X9.37 Files", *All My Papers*, 5/2/2006, 39 pgs.
	F15	Federal Reserve Banks Plan Black-and-White Image Standard and Quality Checks, May 2004, 2 pgs.
	F16	Caplan, J. et al., :Most Influential Gadgets and Gizmos 2002: Sanyo SCP-5300", 2002, 1 pg.
	F17	Hill, "From J-Phone to Lumina 1020: A complete history of the camera phone", *Digital Trends*, 2020, 9 pgs.
	F18	Hoffman, J., "Before there Were Smartphones, There was I-Mode", 1999, 5 pgs.
	F19	"Vodafane calls on mobiles to go live!", 2002, 8 pgs.

Examiner Signature		Date Considered	

ALL REFERENCES CONSIDERED EXCEPT WHERE LINED THROUGH. /I.L./

Information Disclosure Statement

Application No. 16/507,595 Attorney Docket No. US-0152.11 (14538-668)

EXAMINER INITIAL	Include name of author, title of the article (when appropriate), title of the item (book, magazine, journal, serial, symposium, catalog, etc.), date, page(s), volume-issue number(s), publisher, city and/or country where published.	
	F20	"Sprint PCS Vision Guide", 2005, 86 pgs.
	F21	FDIC – Remote Capture: A Primer, 2009, 3 pgs.
	F22	Callaham, J., "The first camera phone was sold 20 years ago, and it's not what you expect", *Android Authority*, 2019, 5 pgs.
	F23	Fujisawa, H. et al., "Information Capturing Camera and Developmental Issues", *IEEE Xplore*, downloaded on Aug. 18, 2020, 4 pgs.
	F24	Rohs, M. et al., "A Conceptual Framework for Camera Phone-based Interaction Techniques", *Swiss Federal Institute of Technology*, Zurich, Switzerland, 10 pgs.
	F25	Koga, M. et al., "Camera-based Kanji OCR for Mobile-phones: Practical Issues, *IEEE*, 2005, 5 pgs.
	F26	Parikh, T., "Using Mobile Phones for Secure, Distributed Document Processing in the Developing World", *IEE Persuasive Computing*, Vol. 4, No. 2, 2005, 9 pgs.
	F27	Parikh, T., "Mobile Phones and Paper Documents: Evaluating a New Approach for Capturing Microfinance Data in Rural India", *CHI 2006 Proceedings*, 2006, 10 pgs.
	F28	Magid, L., "A baby girl and the camera phone were born 20 years ago", Mercury News, 2017, 3 pgs.
	F29	Liang, J. et al., "Camera-based analysis of text and documents: a survey", *IJDAR*, Vol. 7, 2005, pp 84-104, 21, pgs.
	F30	Gutierrez, L., "Innovation: From Campus to Startup", *Business Watch*, 2008, 2 pgs.
	F31	Doermann, D. et al., "The function of documents", *Image and Vision Computing*, Vol. 16, 1998, pp 799-814.
	F32	Mirmehdi, M. et al., "Towards Optimal Zoom for Automatic Target Recognition", in PROCEEDINGS of the SCANDINAVIAN CONFERENCE on IMAGE ANALYSIS, 1:447-454, 1997, 7 pgs.
	F33	Mirmehdi, M. et al., "Extracting Low Resolution Text with an Active Camera for OCR", in PROCCEDINGS OF THE IX SPANISH SYMPOSIUM ON PATTERN RECOGNITION AND IMAGE PROCESSING (pp 43-48), 2001, 6pgs.
	F34	Zandifar, A. et al., "A Video Based Interface To Textual Information For The Visually Impaired", *IEEE 17th INTERNATIONAL SYMPOSIUM ON PERSONAL, INDOOR AND MOBILE RADIO COMMUNICATIONS,* 1-5, 2002, 6 pgs.
	F35	Laine, M. et al., "A Standalone OCR System For Mobile Cameraphones", *IEEE*, 2006, 5 pgs.
	F36	Federal Reserve Bank, "Reserve Banks to Adopt DSTU X9.37-2003 Format for Check 21 Image Services", 2004, 2 pgs.
	F37	Dhandra, B.V. et al., "Skew Detection in Binary Image Documents Based on Image Dilation and Region labeling Approach", *IEEE*, The 18th International Conference on Pattern Recognition (ICPR'06), 2006, 4 pgs.
	F38	PNC Bank to Offer Ease of Online Deposit Service Integrated with QuickBooks to Small Business", RemoteDepositCapture.com, July 24, 2006, 2 pgs.

1. PRIORITY INFORMATION:

☒ This application claims priority under 35 USC §120 to the following United States patent application(s): 16/025,679. In accordance with 37 CFR §1.98(d), copies of the references cited herein which were submitted to, or cited by, the office, in compliance with 37 CFR §1.98(a)-(c) in the earlier application are not provided herewith. The Examiner is directed to those references cited in all Information Disclosure Statements filed in the priority United States patent application(s) cited above in addition to the references cited herein.

Examiner Signature	/I JUNG LIU/	Date Considered	03/01/2022

ALL REFERENCES CONSIDERED EXCEPT WHERE LINED THROUGH. /I.L./

Information Disclosure Statement

Application No. 16/507,595 Attorney Docket No. US-0152.11 (14538-668)

2. CERTIFICATIONS: (CHECK ALL THAT APPLY)

A. Certifications For 37 CFR §1.97(c) or 37 CFR §1.97(d):

☐ Applicant hereby certifies pursuant to 37 CFR §1.97(e)(1) that each item of information in this Information Disclosure Statement was first cited in any communication from a foreign patent office in a counterpart foreign application not more than three months prior to the filing of this Information Disclosure Statement.

☒ Applicant hereby certifies pursuant to 37 CFR §1.97(e)(2) that no item of information contained in this Information Disclosure Statement was cited in a communication from a foreign patent office in a counterpart foreign application, and, to the knowledge of the undersigned after making reasonable inquiry, no item of information contained in this Statement was known to any individual designated in 37 CFR §1.56(c), more than three months prior to the filing of this Information Disclosure Statement.

B. For Patent Term Adjustment Purposes:

☐ For purposes of 37 CFR §1.704(d)(i) or 37 CFR §1.704(d)(ii), Applicant is hereby submitting concurrently with this Information Disclosure Statement a completed Form PTO/SB/133 that certifies that each item of information contained in this Information Disclosure Statement was first cited in any communication from a patent office in a counterpart foreign or international application or from the Office or is a communication that was issued by a patent office in a counterpart foreign or international application or by the Office, and that this communication was not received by any individual designated in 37 CFR §1.56(c) more than thirty days prior to the filing of this Information Disclosure Statement.

3. FEE INFORMATION: (CHECK IF FEE REQUIRED)

☐ Applicant has calculated a processing fee in the amount of _____ to be due under 37 CFR §1.17(p) in connection with the filing of this Information Disclosure Statement. Applicant authorizes charging the fee to Deposit Account 50-4184.

☒ The Director is hereby authorized to charge any fee deficiency associated with the filing of this Information Disclosure Statement to Deposit Account 50-4184.

Pursuant to the undersigned attorney's obligation and duties under 37 CFR §§ 1.56 and 1.98(a)(3) and (c), either English language abstracts, partial translations, or full translations are included for patent documents which are not in English for the express purpose of providing a concise explanation of the references to the Patent and Trademark Office with the opportunity to evaluate the same. Applicant respectfully requests the Examiner's consideration of the above reference(s) and entry thereof into the record of this application.

By submitting this Statement, Applicant is attempting to fully comply with the duty of candor and good faith mandated by 37 CFR §1.56. As such, this Statement is not intended to constitute an admission that any of the enclosed references, or other information referred to therein, constitutes "prior art" or is otherwise "material to patentability," as that phrase is defined in 37 CFR §1.56(a).

Respectfully submitted,

October 21, 2020
Date

/Scott W. Brim/
Scott W. Brim (Reg. No. 51,500)

Examiner Signature	/I JUNG LIU/	Date Considered	03/01/2022

Page 3 of 3

ALL REFERENCES CONSIDERED EXCEPT WHERE LINED THROUGH. /I.L./

CERTIFICATE OF EFS FILING UNDER 37 CFR §1.8

I hereby certify that this correspondence is being electronically transmitted to the United States Patent and Trademark Office, Commissioner for Patents, via the EFS pursuant to 37 CFR §1.8 on the below date:

Date: August 19, 2019 Name: Scott W. Brim (Reg. No. 51,500) Signature: /Scott W. Brim/

SUPPLEMENTAL INFORMATION DISCLOSURE STATEMENT BY APPLICANT (Not for submission under 37 CFR 1.99)		
	Application Number	16/507,595
	Filing Date	July 10, 2019
	First Named Inventor	Charles Lee Oakes
	Art Unit	3693
	Confirmation Number	4037
	Examiner Name	TBA
	Attorney Docket No.	US-0152.11 (14538-668)

In accordance with the duty of disclosure, Applicant(s) hereby cites the following references:

US PATENT REFERENCES

EXAMINER INITIAL		DOCUMENT NUMBER Number-Kind Code (if known)	DATE	NAME
	B1	US 7,793,833 B2	09/14/2010	Yoon et al.
	B2	US 10,325,420 B1	06/18/2019	Moon
	B3	US 10,354,235 B1	07/16/2019	Medina
	B4	US 2006/0221198 A1	10/05/2006	Fry et al.

FOREIGN PATENT REFERENCES

EXAMINER INITIAL		DOCUMENT NUMBER Number-Kind Code (if known)	DATE	COUNTRY	TRANSLATION YES OR NO
	B5	EP 1 855 459 A2	05/10/2007	Europe	

OTHER ART – NON PATENT LITERATURE DOCUMENTS

EXAMINER INITIAL		Include name of author, title of the article (when appropriate), title of the item (book, magazine, journal, serial, symposium, catalog, etc.), date, page(s), volume-issue number(s), publisher, city and/or country where published.
	B6	CBM2019-00005 Patent No. 8,699,779, Patent Owner's Sur-Reply Brief to Petitioner's Reply Brief to Patent Owner Preliminary Response Pursuant to Authorization Provided in Paper No. 15, dated May 1, 2019, 7 pgs.
	B7	CBM2019-00004 Patent No. 8,977,571, Defendant's Claim Construction Brief and supporting exhibits, United Services Automobile Association v. Wells Fargo Bank, N.A., Civil Action No. 2:18-cv-245, dated April 25, 2019, 36 pgs.
	B8	CBM2019-00004 Patent No. 8,977,571, Patent Owner's Sur-Reply Brief to Petitioner's Reply Brief to Patent Owner Preliminary Response Pursuant to Authorization Provided in Paper 14, dated April 30, 2019, 7 pgs.
	B9	USAA's Reply to Claim Construction Brief, United Services Automobile Association v. Wells Fargo Bank, N.A., Civil Action No. 2:18-cv-245, dated May 2, 2019, 15 pgs.
	B10	Plaintiff and Counterclaim Defendant's Answer to Defendant and Counterclaims Plaintiff's Amended Answer, Affirmative Defenses, & Counterclaims, United Services Automobile Association v. Wells Fargo Bank, N.A., Civil Action No. 2:18-cv-366, dated April 26, 2019, 18 pgs.
	B11	USAA's Reply Claim Construction Brief, United Services Automobile Association v. Wells Fargo Bank, N.A., Civil Action No. 2:18-cv-245, dated May 2, 2019, 227 pgs.
	B12	Parties' P.R. 4-5(D) Joint Claim Construction Chart, United Services Automobile Association v. Wells Fargo Bank, N.A., Civil Action No. 2:18-cv-245, dated May 9, 2019, 25 pgs.

Examiner Signature	/I JUNG LIU/	Date Considered	03/01/2022

ALL REFERENCES CONSIDERED EXCEPT WHERE LINED THROUGH. /I.L./

Information Disclosure Statement

Application No. 16/507,595 Attorney Docket No. US-0152.11 (14538-668)

	B13	CBM2019-00002 Patent No. 9,818,090, Decision Denying Institution of Covered Business Method Patent Review *37 C.F.R. § 42.208*, dated April 26, 2019, 5 pgs.
	B14	CBM2019-00003 Patent No. 9,336,517, Decision Denying Institution of Covered Business Method Patent Review *37 C.F.R. § 42.208*, dated June 3, 2019, 28 pgs.
	B15	CBM2019-00004 Patent No. 8,977,571, Decision Denying Institution of Covered Business Method Patent Review *37 C.F.R. § 42.208*, dated May 15, 2019, 33 pgs.
	B16	CBM2019-00005 Patent No. 8,699,779, Decision Denying Institution of Covered Business Method Patent Review *37 C.F.R. § 42.208*, dated June 3, 2019, 27 pgs.
	B17	USAA's Opening Claim Construction Brief, filed in Civil Action No. 2:18-CV-366, dated May 17, 2019, 32 pgs.
	B18	Defendant's Claim Construction Brief, filed in Civil Action No. 2:18-CV-366, dated May 31, 2019, 111 pgs.
	B19	Plaintiff's Notice of Filing Claim Construction Presentation, filed in Civil Action No. 2:18-CV-245, dated May 23, 2019, 106 pgs.
	B20	IPR2019-01081 Patent No. 9,336,517, Petition for *Inter Partes* Review of Claims 1, 5-10, 12-14, 17-20 of US Patent No. 9,336,517, dated June 5, 2019, 78 pgs.
	B21	IPR2019-01082 Patent No. 8,977,571, Petition for *Inter Partes* Review of Claims 1-13 Patent No. 8,977,571, dated June 5, 2019, 75 pgs.
	B22	IPR2019-01083 Patent No. 8,699,779, Petition for *Inter Partes* Review of Claims 1-18 Patent No. 8,699,779, dated June 5, 2019, 74 pgs.
	B23	Plaintiff's Notice of Decisions Denying Institution of Covered Business Method Patent Review, filed in Civil Action No. 2:18-CV-245, dated June 6, 2019, 61 pgs.
	B24	Claim Construction Memorandum Opinion and Order, filed in Civil Action No. 2:18-CV-245, dated June 13, 2019, 48 pgs.
	B25	Parties' P.R.4-5(D) Joint Claim Construction Chart, filed in Civil Action No. 2:18-CV-366, dated June 14, 2019, 28 pgs.
	B26	Defendant's Claim Construction Brief, filed in Civil Action No. 2:18-CV-366, dated May 31, 2019, 28 pgs.
	B27	USAA's Reply Claim Construction Brief, filed in Civil Action No. 2:18-CV-366, dated June 7, 2019, 14 pgs.
	B28	Wells Fargo's Objections to Magistrate Judge Payne's Claim Construction Memorandum Opinion and Order, filed in Civil Action No. 2:18-CV-245, dated June 27, 2019, 7 pgs.
	B29	USAA's Objections to Magistrate Judge Payne's Claim Construction Memorandum Opinion and Order, filed in Civil Action No. 2:18-CV-245, dated June 27, 2019, 6 pgs.
	B30	Parties' P.R. 4-5(D) Joint Claim Construction Chart, filed in Civil Action No. 2:18-CV-366, dated June 18, 2019, 27 pgs.
	B31	IPR2019-00815, Invalidity Chart, uploaded on June 27, 2019, 94 pgs.
	B32	IPR2019-00815, United Services Automobile Association ("USAA")'s Patent Owner Preliminary Response, dated June 27, 2019, 66 pgs.
	B33	IPR2019-00815, Supplemental Invalidity Chart, dated on June 27, 2019, 16 pgs.
	B34	IPR2019-00815, Declaration of Matthew A. Calman in Support of Patent Owner Preliminary Response, dated June 27, 2019, 25 pgs.
	B35	CBM 2019-00027, Declaration of Bharat Prasad, dated July 8, 2019, 32 pgs.
	B36	CBM 2019-00027, Patent Owner Preliminary Response and Exhibits 2001-1042, dated July 8, 2019, 91 pgs.
	B37	CBM 2019-00028, United Services Automobile Association ("USAA")'s Patent Owner Preliminary Response, dated July 8, 2019, 73 pgs.
	B38	CBM2019-00028, Declaration of Matthew A. Calman in Support of Patent Owner Preliminary Response, dated July 8, 28 pgs.
	B39	CBM2019-00028, Malykhina, Elena "Get Smart", Copyright 2006 by ProQuest Information and Learning Company, 6 pgs.
	B40	CBM2019-00028, Palm Treo 700W Smartphone manual, Copyright 2005 by Palm, Inc., 96 pgs.

Examiner Signature	/I JUNG LIU/	Date Considered	

ALL REFERENCES CONSIDERED EXCEPT WHERE LINED THROUGH. /I.L./

Information Disclosure Statement

Application No. 16/507,595 Attorney Docket No. US-0152.11 (14538-668)

	B41	CBM2019-00028, 00000 C720w User Manual for Windows Mobile Smart Phone, Copyright 2006, 352 pgs.
	B42	CBM2019-00028, "Smarter Than Your Average Phone", Copyright 2006 by Factiva, 4 pgs.
	B43	CBM2019-00028, "64 Million Smart Phones Shipped Worldwide in 2006", Canalys Newsroom, 2006, 3 pgs.
	B44	CBM2019-00028, Nokia 9500 Communicator user Guide, Copyright 2006 by Nokia Corporation, 112 pgs.
	B45	CBM2019-00028, Robinson, Daniel, "Client Week -- Headsets advance at 3GSM", Copyright 2004 by VNU Business Publications Ltd., 2 pgs.
	B46	CBM2019-00028, Burney, Brett "MacBook Pro with Intel processor is fast, innovative", Copyright 2006 by Plain Dealer Publishing Co., 2 pgs.
	B47	CBM2019-00028, 17-inch MacBook Pro User's Guide, Copyright 2006 by Apple Computer, Inc., 144 pgs.
	B48	CBM2019-00028, Wong, May "HP unveils new mobile computers", Copyright 2006 by The Buffalo News", 2 pgs.
	B49	CBM2019-00028, Jewell, Mark "Cell Phone Shipments Reach Record 208M", Copyright 2005 by Associated Press, 1 pg.
	B50	CBM 2019-00028, Lawler, Ryan "Apple shows Intel-based Macs, surge in revenue", Copyright 2006 by The Yomiuri Shimbun, 2 pgs.
	B51	CBM 2019-00028, Aspire 9800 Series User Guide, Copyright 2006 by Acer International, 122 pgs.
	B52	CBM 2019-00028, Dell XPS M1210 Owner's Manual, Copyright 2006 by Dell Inc., 192 pgs.
	B53	CBM 2019-00028, Estridge, Bonnie "Isyour phone smart enough?: The series that cuts through the technobabble to bring you the best advice on the latest gadgets", Coyright 2006 by XPRESS -- A1 Nsr Media, 3 pgs.
	B54	CBM 2019-00028, "Motorola, Palm collaborate on smart phone", Copyright 2000 by Crain Communications, Inc., 1 pg.
	B55	CBM 2019-00028, Nasaw, Daniel "Viruses Pose threat to "Smart" Cellphones -- Computer Programs Could Cripple Devices and Shut Down Wireless Networks", Copyright 2004 by Factiva, 2 pgs.
	B56	CBM 2019-00028, Seitz, Patrick "Multifunction Trend Shaking Up The Handheld Device industry; Solid Sales Expected in 2004; PDA, handset, camera -- one single, small product can fill a variety of roles", Copyright 2004 Investor's Business Daily, Inc., 3 pgs.
	B57	Microsoft Mobile Devices Buyer's Guide, 2012, 4 pgs.
	B58	Microsoft Mobile Devices Smartphone, 2003, 2 pgs.
	B59	Plaintiff's Notice of Decision Denying Institution of Covered Business Method Patent Review, filed in Civil Action No. 2:18-CV-245, dated May 15, 2019, 36 pgs.
	B60	Defendant's Claim Construction Brief, filed in Civil Action No. 2:18-CV-366, dated June 24, 2019, 28 pgs.
	B61	CBM2019-00029, United Services Automobile Association (USAA)'s Patent Owner Preliminary Response, dated July 17, 2019, 76 pgs.
	B62	CBM2019-00029, Declaration of Matthew A. Calman in Support of Patent Owner Preliminary Response, dated July 17 2019, 29 pgs.
	B63	CBM2019-00029, Defendant's Claim Construction Brief, filed in Civil Action No. 2:18-CV-366, dated May 31, 2019, 28 pgs.
	B64	CBM2019-00029, Palenchar, Joseph, "PDA Phone Adds WiFi VoIP, Turn-By-Turn GPS Navigation", Copyright 2006 by Reed Business Information, 2 pgs.
	B65	CBM2019-00029, HP User Guide, Additional Product Information, Copyright 2006 by Hewlett-Packard Development Company, L.P., 204 pgs.
	B66	CBM2019-00029, Pocket PC User Manual, Version 1, dated May 2006 by Microsoft, 225 pgs.

Examiner Signature	/I JUNG LIU/	Date Considered	03/01/2022

ALL REFERENCES CONSIDERED EXCEPT WHERE LINED THROUGH. /I.L./

Information Disclosure Statement

Application No. 16/507,595 Attorney Docket No. US-0152.11 (14538-668)

	B67	CBM2019-00029, "Dynamism.com: Take tomorrow's tech home today with Dynamism.com: Latest gadgets merge next generation technology with high style design", Copyright 2006 Normans Media Limited, 2 pgs.
	B68	IPR2019-00815, Federal Reserve Financial Services Retired: DSTU X9.37-2003, "Specifications for Electronic Exchange of Check and Image Data, Copyright 2006 by Accredited Standards Committee X9, Inc., dated March 31, 2003, 157 pgs.
	B69	IPR2019-01081, Declaration of Peter Alexander, Ph.D, dated June 5, 2019, 135 pgs.
	B70	USAA's Opening Claim Construction Brief, United Services Automobile Association v. Wells Fargo Bank, N.A., Civil Action No. 2:18-cv-245, dated April 11, 2019, 32 pgs.
	B71	P.R. 4-3 Joint Claim Construction and Pre-Hearing Statement, United Services Automobile Association v. Wells Fargo Bank, N.A., Civil Action No. 2:18-cv-366, dated April 5, 2019, 190 pgs.
	B72	Defendant Wells Fargo Bank, N.A.'s Amended Answer, Affirmative Defenses, and Counterclaims to Plaintiff's Complaint, United Services Automobile Association v. Wells Fargo Bank, N.A., Civil Action No. 2:18-cv-366, dated April 12, 2019, 32 pgs.
	B73	Plaintiff and Counterclaim Defendant's Answer to Defendant and Counterclaims Plaintiff's Amended Answer, Affirmative Defenses, & Counterclaims, United Services Automobile Association v. Wells Fargo Bank, N.A., Civil Action No. 2:18-cv-245, dated March 21, 2019, 36 pgs.

1. PRIORITY INFORMATION:

☐ This application claims priority under 35 USC §120 to the following United States patent application(s):_____. In accordance with 37 CFR §1.98(d), copies of the references cited herein which were submitted to, or cited by, the office, in compliance with 37 CFR §1.98(a)-(c) in the earlier application are not provided herewith. The Examiner is directed to those references cited in all Information Disclosure Statements filed in the priority United States patent application(s) cited above in addition to the references cited herein.

2. CERTIFICATIONS: (CHECK ALL THAT APPLY)

A. Certifications For 37 CFR §1.97(c) or 37 CFR §1.97(d):

☐ Applicant hereby certifies pursuant to 37 CFR §1.97(e)(1) that each item of information in this Information Disclosure Statement was first cited in any communication from a foreign patent office in a counterpart foreign application not more than three months prior to the filing of this Information Disclosure Statement.

☐ Applicant hereby certifies pursuant to 37 CFR §1.97(e)(2) that no item of information contained in this Information Disclosure Statement was cited in a communication from a foreign patent office in a counterpart foreign application, and, to the knowledge of the undersigned after making reasonable inquiry, no item of information contained in this Statement was known to any individual designated in 37 CFR §1.56(c), more than three months prior to the filing of this Information Disclosure Statement.

B. For Patent Term Adjustment Purposes:

☐ For purposes of 37 CFR §1.704(d)(i) or 37 CFR §1.704(d)(ii), Applicant is hereby submitting concurrently with this Information Disclosure Statement a completed Form PTO/SB/133 that certifies that each item of information contained in this Information Disclosure Statement was first cited in any communication from a patent office in a counterpart foreign or international application or from the Office or is a communication that was issued by a patent office in a counterpart foreign or international application or by the Office, and that this communication was not received by any individual designated in 37 CFR §1.56(c) more than thirty days prior to the filing of this Information Disclosure Statement.

Examiner Signature	/I JUNG LIU/	Date Considered	03/01/2022

ALL REFERENCES CONSIDERED EXCEPT WHERE LINED THROUGH. /I.L./

Information Disclosure Statement

Application No. 16/507,595 Attorney Docket No. US-0152.11 (14538-668)

3. FEE INFORMATION: (CHECK IF FEE REQUIRED)

☐ Applicant has calculated a processing fee in the amount of _____ to be due under 37 CFR §1.17(p) in connection with the filing of this Information Disclosure Statement. Applicant authorizes charging the fee to Deposit Account 50-4184.

☒ The Director is hereby authorized to charge any fee deficiency associated with the filing of this Information Disclosure Statement to Deposit Account 50-4184.

Pursuant to the undersigned attorney's obligation and duties under 37 CFR §§ 1.56 and 1.98(a)(3) and (c), either English language abstracts, partial translations, or full translations are included for patent documents which are not in English for the express purpose of providing a concise explanation of the references to the Patent and Trademark Office with the opportunity to evaluate the same. Applicant respectfully requests the Examiner's consideration of the above reference(s) and entry thereof into the record of this application.

By submitting this Statement, Applicant is attempting to fully comply with the duty of candor and good faith mandated by 37 CFR §1.56. As such, this Statement is not intended to constitute an admission that any of the enclosed references, or other information referred to therein, constitutes "prior art" or is otherwise "material to patentability," as that phrase is defined in 37 CFR §1.56(a).

Respectfully submitted,

August 19, 2019
Date

/Scott W. Brim/
Scott W. Brim (Reg. No. 51,500)

Examiner Signature	/I JUNG LIU/	Date Considered	03/01/2022

ALL REFERENCES CONSIDERED EXCEPT WHERE LINED THROUGH. /I.L./

Office de la Propriété Intellectuelle du Canada
Un organisme d'Industrie Canada

Canadian Intellectual Property Office
An agency of Industry Canada

CA 2619884 A1 2007/03/01

(21) 2 619 884

(12) DEMANDE DE BREVET CANADIEN
CANADIAN PATENT APPLICATION

(13) A1

(86) Date de dépôt PCT/PCT Filing Date: 2006/08/22
(87) Date publication PCT/PCT Publication Date: 2007/03/01
(85) Entrée phase nationale/National Entry: 2008/02/19
(86) N° demande PCT/PCT Application No.: US 2006/032831
(87) N° publication PCT/PCT Publication No.: 2007/024889
(30) Priorité/Priority: 2005/08/23 (US11/210,004)

(51) Cl.Int./Int.Cl. *G06K 9/36* (2006.01)
(71) Demandeur/Applicant:
ALOGENT CORPORATION, US

(72) Inventeurs/Inventors:
VERMA, AMAR K., US;
GANGADHAR, RANJEE B., US

(74) Agent: GOWLING LAFLEUR HENDERSON LLP

(54) Titre : ANALYSE ET VERIFICATION DE LA QUALITE D'IMAGE EN TEMPS REEL
(54) Title: REAL TIME IMAGE QUALITY ANALYSIS AND VERIFICATION

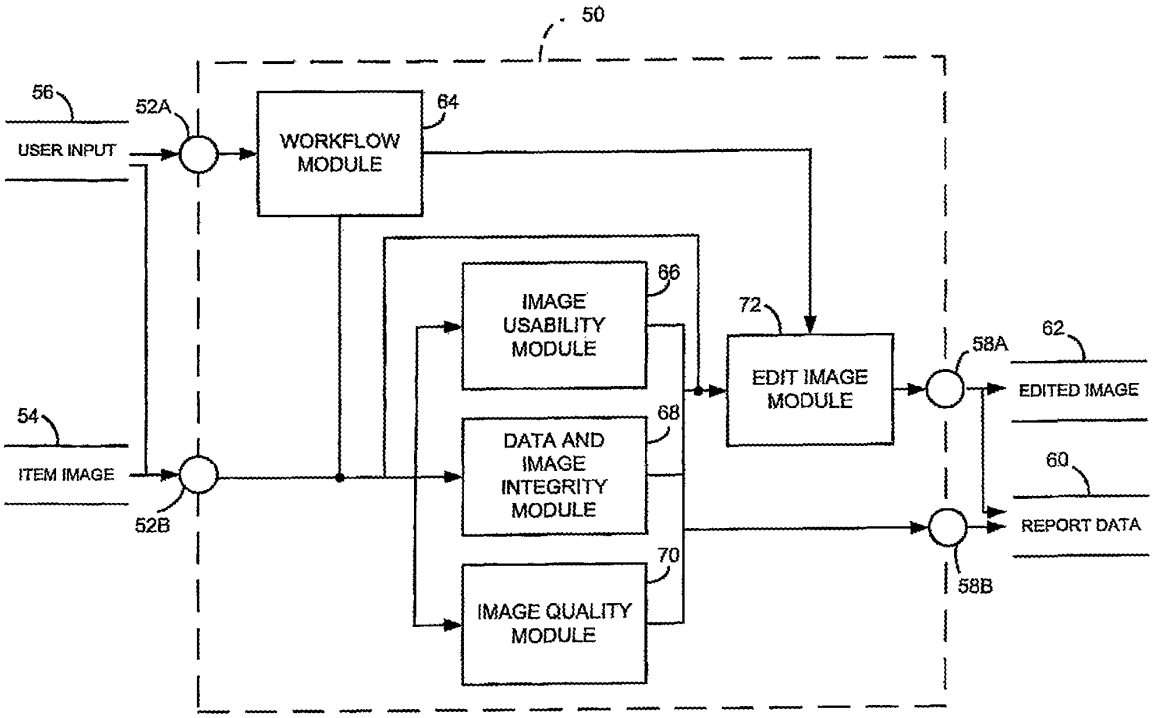

(57) Abrégé/Abstract:
A configurable image quality analysis system for use at a point of presentment includes an input receptive of an item image of a physical item at least partially embodying a financial transaction. An image quality module is adapted to perform a plurality of image quality tests on the item image according to a plurality of configurable test parameters. An edit module is adapted to perform at least one edit on images of unacceptable quality as defined by the image quality module according to a plurality of configurable edit parameters. An output is adapted to report results of the tests of the image quality module and an edited image from the edit module.

(12) INTERNATIONAL APPLICATION PUBLISHED UNDER THE PATENT COOPERATION TREATY (PCT)

(19) World Intellectual Property Organization
International Bureau

(43) International Publication Date
1 March 2007 (01.03.2007)

PCT

(10) International Publication Number
WO 2007/024889 A3

(51) International Patent Classification:
G06K 9/36 (2006.01)

(21) International Application Number:
PCT/US2006/032831

(22) International Filing Date: 22 August 2006 (22.08.2006)

(25) Filing Language: English

(26) Publication Language: English

(30) Priority Data:
11/210,004 23 August 2005 (23.08.2005) US

(63) Related by continuation (CON) or continuation-in-part (CIP) to earlier application:
US 11/210004 (CON)
Filed on 23 August 2005 (23.08.2005)

(71) Applicant *(for all designated States except US)*: **ALOGENT CORPORATION** [US/US]; 4005 Windward Plaza, Second Floor, Alpharetta, Georgia 30005 (US).

(72) Inventors; and
(75) Inventors/Applicants *(for US only)*: **VERMA, Amar K.** [US/US]; 525 Crepe Myrtle Court, Alpharetta, Georgia 30005 (US). **GANGADHAR, Ranjee B.** [IN/US]; 10140 Barston Court, Alpharetta, Georgia 30022 (US).

(74) Agents: **MCCLAUGHRY, David A.** et al.; HARNESS, DICKEY & PIERCE, P.L.C., P.o. Box 828, Bloomfield Hills, Michigan 48303 (US).

(81) Designated States *(unless otherwise indicated, for every kind of national protection available)*: AE, AG, AL, AM, AT, AU, AZ, BA, BB, BG, BR, BW, BY, BZ, CA, CH, CN, CO, CR, CU, CZ, DE, DK, DM, DZ, EC, EE, EG, ES, FI, GB, GD, GE, GH, GM, HN, HR, HU, ID, IL, IN, IS, JP, KE, KG, KM, KN, KP, KR, KZ, LA, LC, LK, LR, LS, LT, LU, LV, LY, MA, MD, MG, MK, MN, MW, MX, MY, MZ, NA, NG, NI, NO, NZ, OM, PG, PH, PL, PT, RO, RS, RU, SC, SD, SE, SG, SK, SL, SM, SV, SY, TJ, TM, TN, TR, TT, TZ, UA, UG, UZ, VC, VN, ZA, ZM, ZW.

(84) Designated States *(unless otherwise indicated, for every kind of regional protection available)*: ARIPO (BW, GH, GM, KE, LS, MW, MZ, NA, SD, SL, SZ, TZ, UG, ZM, ZW), Eurasian (AM, AZ, BY, KG, KZ, MD, RU, TJ, TM), European (AT, BE, BG, CH, CY, CZ, DE, DK, EE, ES, FI, FR, GB, GR, HU, IE, IS, IT, LT, LU, LV, MC, NL, PL, PT, RO, SE, SI, SK, TR), OAPI (BF, BJ, CF, CG, CI, CM, GA, GN, GQ, GW, ML, MR, NE, SN, TD, TG).

[Continued on next page]

(54) Title: REAL TIME IMAGE QUALITY ANALYSIS AND VERIFICATION

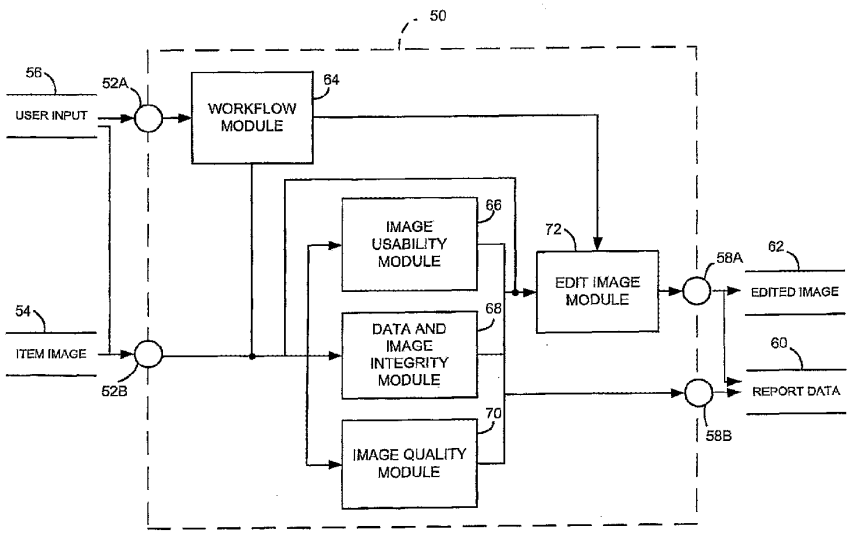

(57) Abstract: A configurable image quality analysis system for use at a point of presentment includes an input receptive of an item image of a physical item at least partially embodying a financial transaction. An image quality module is adapted to perform a plurality of image quality tests on the item image according to a plurality of configurable test parameters. An edit module is adapted to perform at least one edit on images of unacceptable quality as defined by the image quality module according to a plurality of configurable edit parameters. An output is adapted to report results of the tests of the image quality module and an edited image from the edit module.

WO 2007/024889 A3

WO 2007/024889 A3

Declarations under Rule 4.17:

— *as to applicant's entitlement to apply for and be granted a patent (Rule 4.17(ii))*

— *as to the applicant's entitlement to claim the priority of the earlier application (Rule 4.17(iii))*

Published:

— *with international search report*

— *before the expiration of the time limit for amending the claims and to be republished in the event of receipt of amendments*

(88) Date of publication of the international search report:
31 May 2007

For two-letter codes and other abbreviations, refer to the "Guidance Notes on Codes and Abbreviations" appearing at the beginning of each regular issue of the PCT Gazette.

REAL TIME IMAGE QUALITY ANALYSIS AND VERIFICATION

FIELD OF THE INVENTION

[0001] The present invention generally relates to financial transaction systems, methods, and devices, and particularly to systems and methods of transactions at point of presentment utilizing image quality analysis and verification.

BACKGROUND OF THE INVENTION

[0002] Financial institutions typically interact with parties to transactions, such as individuals, partnerships, companies, and corporations, by providing points of presentment at locations that are convenient to the parties to the transactions. Points of presentment include, for example, front counters of bank branches, cash vaults, merchant back offices, and automated teller machines (ATMs) providing deposit automation. Parties to transactions present physical items embodying a transaction at these points of presentment, and these items typically include checks, cash, withdrawal slips, deposit slips, loan payment slips, and/or remittance slips. Images of these items are taken at the point of presentment to assist in the processing of the transaction.

[0003] While tellers often assist parties to transactions at some points of presentment, these tellers are typically required to spend excessive amounts of time and attention to data entry and transaction balancing. Furthermore, the tellers typically have no way of ensuring that all items of a transaction are valid. In addition, points of presentment affording no teller assistance rely entirely on the party to the transaction to ensure that the transaction is balanced. Thus, the teller's focus is on the transaction and not the customer.

[0004] Often financial institution branches will initiate a transaction at the point of presentment, then re-initiate assembly and processing of the transaction and images of the transaction, long after the party to the transaction has departed the point of presentment. As a result, unbalanced and/or invalid transactions, and image mismatches are discovered late, without affording the party to the transaction or the teller at the point of presentment an opportunity to correct or otherwise balance the transaction.

[0005] For financial institutions to be capable of truncating items at the point of presentment, and to comply with newly published standards for the exchange of image based transactions, (ANSI DSTU X9.37 2003), it is necessary to perform a plurality of quality, usability and integrity tests upon the item images. Given that truncation standards may allow for destruction of the paper item at the point of presentment, item images must be qualified at the point of presentment during capture of the transactions.

[0006] The need remains, therefore, for a system and method of processing a transaction at a point of presentment that improves quality control of transactions and images, in a real time mode, while reducing time and labor requirements at a point of presentment. The present invention fulfills this need.

SUMMARY OF THE INVENTION

[0007] In accordance with the present invention, a configurable image quality analysis system for use at a point of presentment includes an input receptive of an image of a physical item which at least partially embodies a financial transaction. An image quality module is adapted to perform a plurality of quality tests on the image according to a plurality of configurable test parameters, inclusive of validating the image against the item information associated with it. An edit module is adapted to perform at least one edit on images of unacceptable quality as defined by the image quality module according to a plurality of configurable edit parameters. An output is adapted to report results of the tests of the image quality module and an edited image from the edit module.

[0008] Further areas of applicability of the present invention will become apparent from the detailed description provided hereinafter. It should be understood that the detailed description and specific examples, while indicating the preferred embodiment of the invention, are intended for purposes of illustration only and are not intended to limit the scope of the invention.

BRIEF DESCRIPTION OF THE DRAWINGS

[0009] The present invention will become more fully understood from the detailed description and the accompanying drawings, wherein:

[0010] Figure 1 is a an entity relationship diagram illustrating a financial transaction system implemented at a point of presentment according to the present invention;

[0011] Figure 2 is a functional block diagram illustrating an image quality analysis, transaction processing system for use at a point of presentment according to the present invention; and

[0012] Figure 3 is a flow diagram illustrating an image quality analysis method according to the present invention.

DETAILED DESCRIPTION OF THE PREFERRED EMBODIMENT

[0013] The following description of the preferred embodiment is merely exemplary in nature and is in no way intended to limit the invention, its application, or uses. For purposes of clarity, the same reference numbers will be used in the drawings to identify similar elements.

[0014] Figure 1 illustrates a point of presentment 10 implementing a financial transaction processing system including a real time image quality analysis system in accordance with the present invention. It is envisioned that a financial institution according to the present invention has a central location 12 with a central transaction datastore 14 and centralized business rules 16. The central location 12 promulgates central business rules 16 by daily transmitting business rules data 16A over a communications network 18, such as the Internet, to plural points of presentment. In turn, point of presentment 10 daily receives rules data 16B via data input 17 and stores it in local business rules datastore 20.

[0015] Local business rules datastore 20 may store validation characteristics for authenticating identity of parties and/or items. Validation characteristics may include routing numbers for financial institutions, account numbers for parties to transactions, one or more signatures or other biometric characteristics of individuals, and/or encryption keys, hash functions, and similar

code features relating to digital watermarks, holograms, and other item features. As further explained below, local business rules datastore 20 also define how to identify a type of document item based on image features and/or codeline data, how to extract, recognize, and utilize features from different types of documents, and how to validate and balance different types of transactions.

[0016] Transaction processor 34 inputs transaction data including images of items 30 that are scanned using imaging and scanning mechanism 32 and user input 26 provided by an input device 28. Input device 28 may be at least one of a keyboard, a mouse, a touchscreen, a microphone with speech recognition capability, and/or other input mechanisms. Transaction processor 34 generally performs the tasks of recognizing, validating and balancing the transaction. More specifically, transaction processor 34 performs the tasks of assigning a unique document identification number (DIN) to each item image, recognizing and extracting relevant data from item images, and filling fields of electronic form 22 with extracted data. As shown in Figure 2, transaction processor 34 further includes a configurable image quality analysis system 50, used to determine the validity and quality of each item image according to validation characteristics of local business rules 20. Corrections to item images and field contents may be made by a user interfacing with the application at the point of presentment or a user facilitating the transaction at a remote location using an input device 28 and/or scanning mechanism 32. Transaction processor 34 balances the complete cash and/or check transaction and sends a validation decision along with the electronic from filling results back to the user via visual screen 24. Transaction processor 34 posts data stored in local transaction datastore 40 which is then available for communication to central transaction datastore 14 upon receipt of input 26 command to post.

[0017] Figure 2 illustrates the function of configurable image quality analysis system 50 of transaction processor 34 in accordance with the present invention. As can be appreciated, image quality analysis system 50 can be configured to validate item images other than item images of a financial transaction. An input 52 is receptive of item image 54 and user input 56. User input 56 is adapted to configure the system to perform quality tests on item

image 54 according to local business rules 20 which may include institution specific requirements, as well as federally-mandated requirements for item truncation. An output 58 is adapted to provide quality report data 60 and edited images 62 that are viewable by the user and that may be stored in local transaction datastore 40. Workflow module 64 configures and dictates how and when image quality analysis is performed via user input 56. Workflow module 64 can be adapted to validate a single image, a group of images, or a specific subset of images according to configurable tests and parameters. Workflow module 64 can also be adapted to schedule the performance of image quality analysis tests for a sender before transmittal to central location 12 or by a receiver after transmittal to central location 12. Workflow module 64 can also be adapted to configure how images are displayed and modified during review mode processing. Parameters such as zoom percentage, rotation of item image, display mode (i.e. single view, duplex view, or multiple view), display interval in seconds, display header, display unchecked, accepted, suspected, rejected or all images, and delete specific images can be configured via user input 56.

[0018] Image usability module 66 configures and extracts usability test fields from item image 54 via user input 56. Usability test fields may be defined as test areas on a check document such as date, payee, courtesy amount, legal amount, signature, payor name and address, magnetic ink character recognition (MICR) line, memo line, payor bank and address, payee endorsement, institution of first deposit endorsement and/or transit endorsement. For example, certain field data may not be available if the item is not properly scanned, e.g. upside down or backwards. Image usability module 66 tests to determine whether the selected usability test field is present and reports an acceptance state of true or false based upon its existences.

[0019] Data and image integrity module 68 establishes the validity of data extracted from item image 54 to assure they are for the same item. Data and image integrity module 68 validates visual data on item image 54 against validation characteristics stored in datastore and determines a validation state based thereon. For example, visible MICR codeline can be validated against stored MICR codeline data. The validation tests can be configured via user input

56. For example, a user might enter input according to how many digits of codeline data must match to return a positive or negative match. Data and image integrity module reports validity decisions to the user via data output 58.

[0020] Image quality module 70 employs image analysis techniques to determine a quality image. Image quality module 70 inputs user input 56 and item image 54. User input 56 is adapted to configure parameters of any number of quality tests. Quality tests are performed on item image 54. Quality tests include, but are not limited to, partial image test, excessive skew test, piggyback item test, too light or too dark test, streaks or bands test, exceed minimum size test, and exceed maximum size test. Partial image test detects and reports if only part of an expected item image 54 is present. Excessive skew detects and reports item image 54 exceeds allowable skew parameters. Piggyback item test detects the presence of more than one item image for an image 54. Too light or too dark tests detect images outside of the allowable parameters for lightness of darkness of item image 54. Streaks or bands test detects foreign image content preventing recognition of the item image information. Exceeds size test validates that the storage size of the item image 54 is within the minimum and maximum allowable parameters. A data output is adapted to report results of each test performed. Tests and test parameters may be established by promulgated central business rules 16 and/or local business rules 20.

[0021] Edit image module 72 performs detection and editing based on reported flaws from image usability module 66 data and image integrity module 68, image quality module 70, and user input 56. Edit module 72 functions include, but are not limited to, deskewing, filtering (removing speckles and hole punches), cropping, rotating, annotating, framing, scaling, and image format conversion. Each edit function has associated configurable parameters that define the edit to be performed on item image 54. Edit image module 72 outputs an edited image 62 and report data 60 according to parameters configured in workflow module 64.

[0022] The preferred embodiment of the system of the present invention having now been described in detail, attention is now directed to the method according to the present invention as illustrated in Figure 3. Figure 3

illustrates a method of performing image quality analysis on an item. Accordingly, at step 100, a job profile is configured. The user configures parameters associated with the workflow, image usability, data and image integrity, image quality, and edit functions. The parameters are saved as a job profile. Image quality analysis is then scheduled to occur according to the workflow specified in the job profile. At step 102, an image is created using scanning mechanism 32. A single item or a batch of items may be processed according to the job profile. At step 104, image quality tests configured in the job profile to run are performed. A single test may be performed or a number of tests may be performed simultaneously before output is displayed to the screen. At step 106, item image 54 is output from the image quality module 70 and is available for post-test editing, if necessary. At step 108, inferior quality item images can be edited to provide a satisfactory quality image via pre-configured edit commands or commands entered by the user. If all scheduled quality tests are complete, at step 110, the validated image and extracted image data are stored in local transaction datastore 40 at step 112. At step 114, the process continues until each item of the batch has been tested.

[0023] Those skilled in the art can now appreciate from the foregoing description that the broad teachings of the present invention can be implemented in a variety of forms. Therefore, while this invention has been described in connection with particular examples thereof, the true scope of the invention should not be so limited since other modifications will become apparent to the skilled practitioner upon a study of the drawings, the specification and the following claims.

CLAIMS

What is claimed is:

1. A configurable image quality analysis system for use at a point of presentment, comprising:

an input receptive of an image of a physical item at least partially embodying a financial transaction;

an image quality module adapted to perform a plurality of image quality tests on the image according to a plurality of configurable test parameters to identify a poor quality image;

an edit module adapted to perform at least one edit on the poor quality image to generate an edited image; and

an output adapted to report at least one of the edited images and a report of results from the plurality of quality tests of the image quality module and the edit module.

2. The system of claim 1, wherein the edited image is stored in a transaction datastore.

3. The system of claim 1, wherein the report is stored in a transaction datastore.

4. The system of claim 1, further comprising a workflow module adapted to sequence the plurality of image quality tests.

5. The system of claim 4, wherein the workflow module is further adapted to configure an image display parameter.

6. The system of claim 1, further comprising an image usability module adapted to configure and extract a test field from the image, and wherein the usability test fields are used to determine an acceptance state based upon the presence of the test field on the image.

7. The system of claim 6, further comprising a data and image integrity module adapted to determine a validation state based upon a comparison of visual data extracted from the image with a validation characteristic.

8. The system of claim 7, wherein the data and image integrity module is further adapted to retrieve the validation characteristics from a datastore.

9. The system of claim 1, wherein the image quality module performs at least one image test function selected from the group consisting of a partial image test, excessive skew test, piggyback image test, too light test, too dark test, streaks test, bands test, exceeds minimum size test and maximum size test.

10. The system of claim 1, wherein the edit module performs at least one image edit function selected from the group consisting of border detection, filtering, cropping, rotation, annotation, framing, scaling, and image conversion.

11. A method of performing image quality analysis on an item of a financial transaction, comprising:

retrieving a job profile from a datastore, wherein the job profile includes a set of document identifiers and a set of image quality test parameters;

generating an image record of a physical item;

reading an item image according to the set of document identifiers;

performing an image quality test based on the set of quality test parameters of the job profile to determine an image quality state;

editing the flawed image based on the image quality state and the set of edit parameters of the job profile to create a corrected image record; and

posting the image quality test results and the corrected image record to a screen for viewing.

12. The method of claim 11, further comprising configuring a workflow parameter to sequence execution of the at least one imagine quality test.

13. The method of claim 12, further comprising configuring work flow parameters to display the image quality test results and the corrected image record.

14. The method of claim 11, further comprising posting the image quality test results and the corrected image record to a transaction datastore.

15. The method of claim 11, further comprising determining an acceptance state based the presence of a usability test field in the image record.

16. The method of claim 15 wherein the acceptance state is retrieved from a datastore.

17. The method of claim 10, further comprising determining validation state based on a comparison of visual data extracted from the item image with a validation characteristic.

18. The method of claim 17 wherein the validation characteristic is retrieved from a datastore.

19. The method of claim 11, wherein performing at least one image quality test includes at least one test selected from the group consisting of partial image test, excessive skew test, piggyback image test, too light test, too dark test, streaks test, bands test, exceeds minimum size test and maximum size test.

20. The method of claim 11, editing the flared image includes at least one editing function selected from the group consisting of deskewing, adding annotation, framing, scaling, and converting the flawed image.

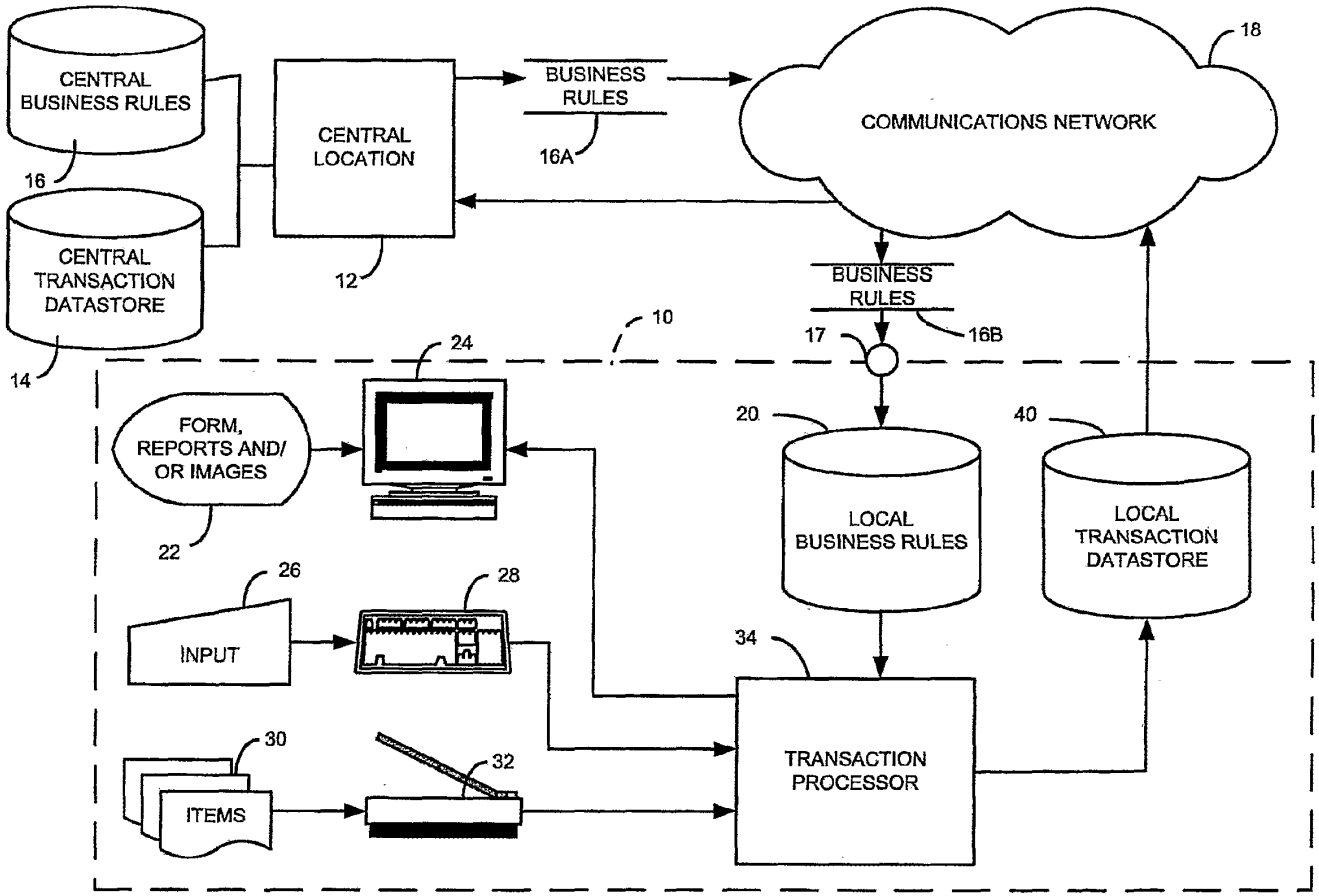
CENTRAL BUSINESS RULES
16
CENTRAL TRANSACTION DATASTORE
14
CENTRAL LOCATION
12
BUSINESS RULES
16A
COMMUNICATIONS NETWORK
18
BUSINESS RULES
16B
17
10
24
FORM, REPORTS AND/ OR IMAGES
22
20
LOCAL BUSINESS RULES
40
LOCAL TRANSACTION DATASTORE
26
INPUT
28
34
30
ITEMS
32
TRANSACTION PROCESSOR

Figure 1

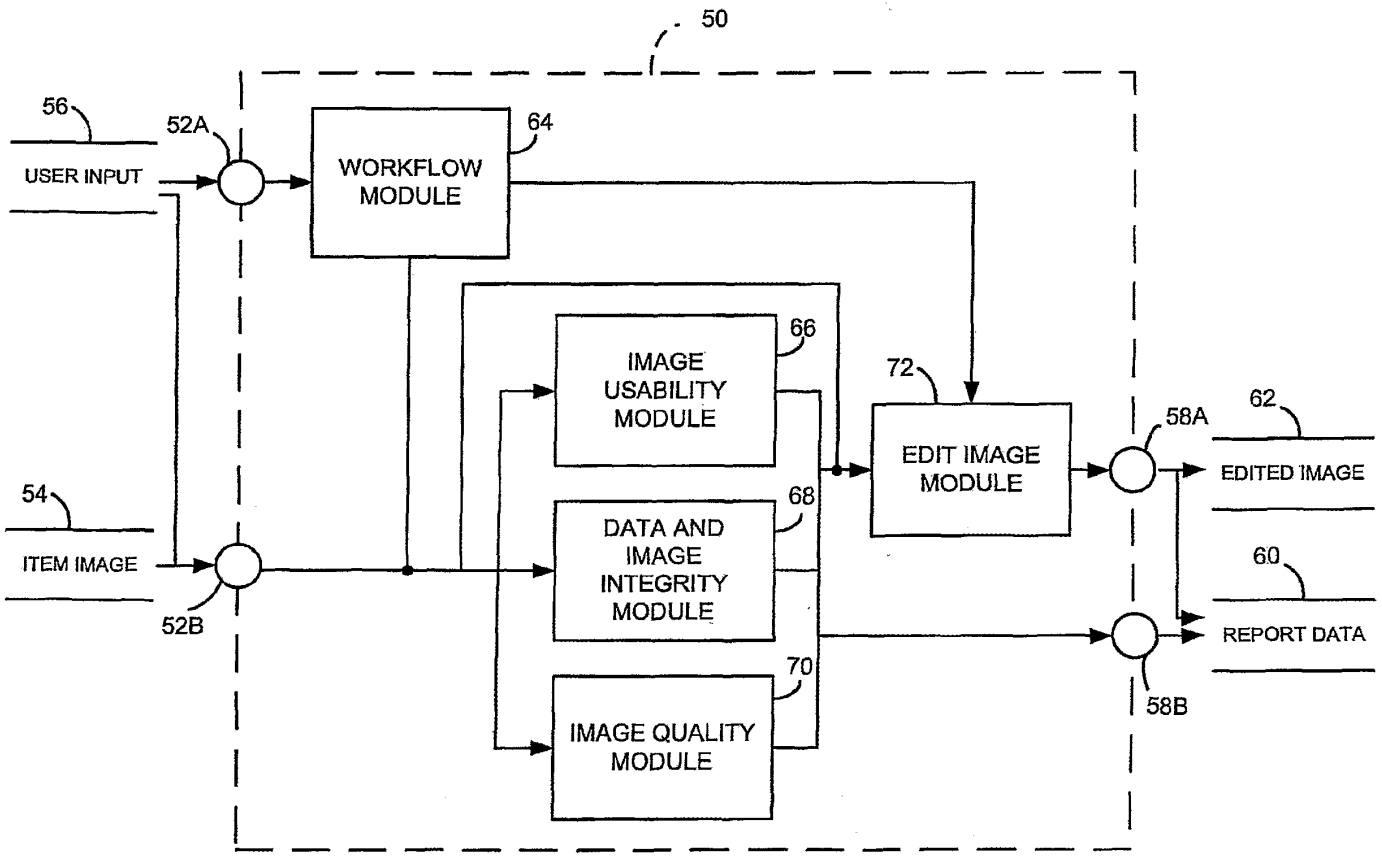
50
56
USER INPUT
52A
WORKFLOW MODULE
64
IMAGE USABILITY MODULE
66
72
EDIT IMAGE MODULE
58A
62
EDITED IMAGE
54
ITEM IMAGE
52B
DATA AND IMAGE INTEGRITY MODULE
68
60
REPORT DATA
58B
IMAGE QUALITY MODULE
70

Figure 2

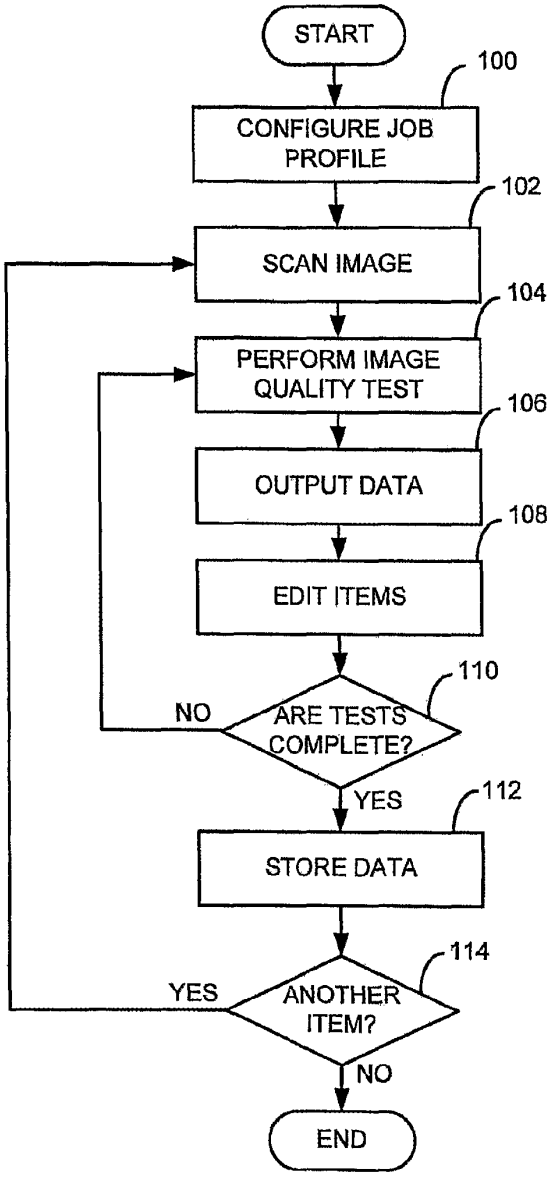
START
100
CONFIGURE JOB PROFILE
102
SCAN IMAGE
104
PERFORM IMAGE QUALITY TEST
106
OUTPUT DATA
108
EDIT ITEMS
110
ARE TESTS COMPLETE?
NO
YES
112
STORE DATA
114
ANOTHER ITEM?
YES
NO
END

Figure 3

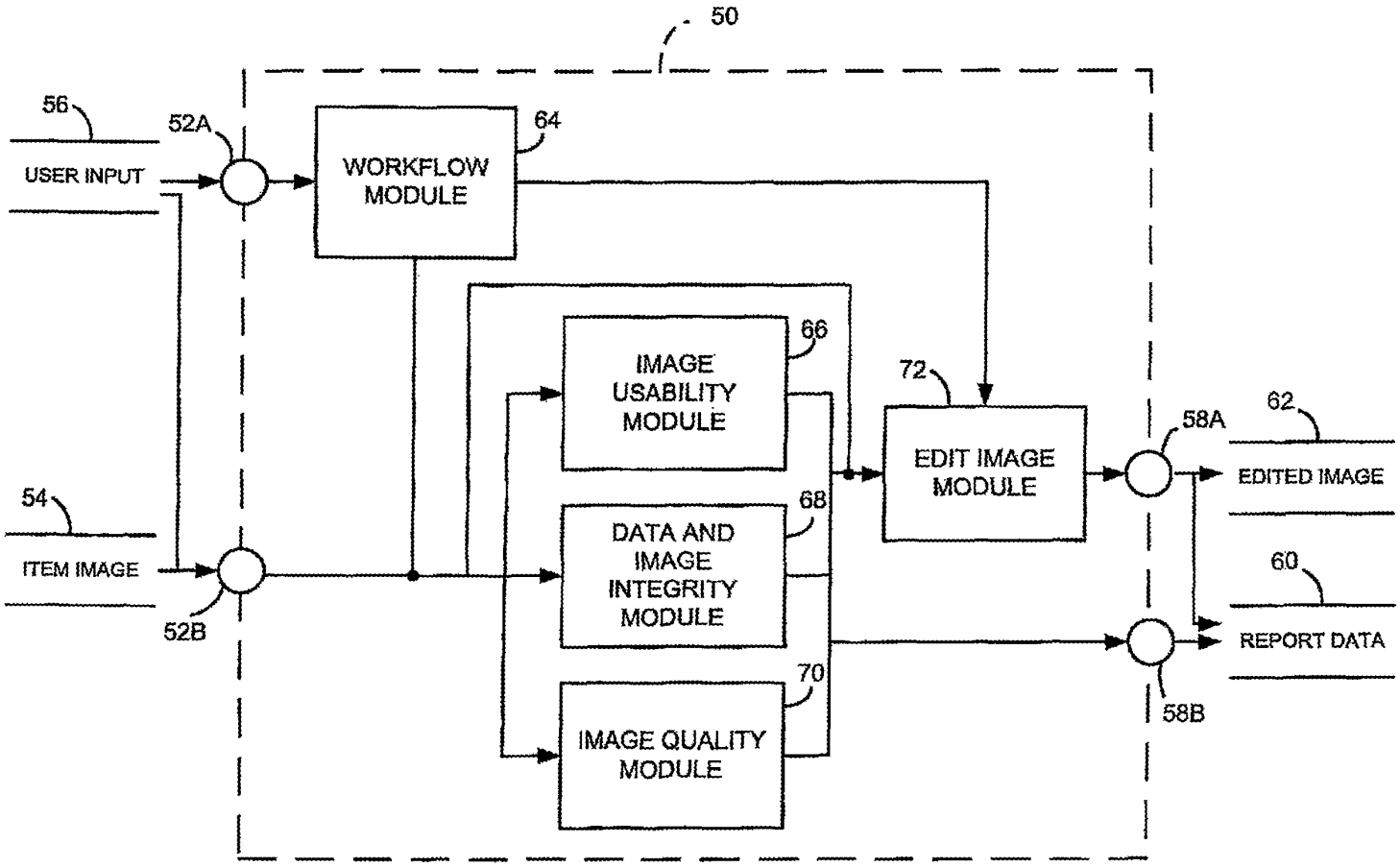
50
56
USER INPUT
52A
WORKFLOW MODULE
64
IMAGE USABILITY MODULE
66
72
EDIT IMAGE MODULE
58A
62
EDITED IMAGE
54
ITEM IMAGE
52B
DATA AND IMAGE INTEGRITY MODULE
68
60
REPORT DATA
58B
IMAGE QUALITY MODULE
70

PCT WORLD INTELLECTUAL PROPERTY ORGANIZATION
International Bureau

INTERNATIONAL APPLICATION PUBLISHED UNDER THE PATENT COOPERATION TREATY (PCT)

(51) International Patent Classification 6 : H04N 1/32

A1

(11) International Publication Number: WO 96/14707

(43) International Publication Date: 17 May 1996 (17.05.96)

(21) International Application Number: PCT/US95/14596

(22) International Filing Date: 25 October 1995 (25.10.95)

(30) Priority Data:
08/334,828 4 November 1994 (04.11.94) US

(71) Applicant: UNISYS CORPORATION [US/US]; Township Line and Union Meeting Roads, P.O. Box 500, Blue Bell, PA 19424 (US).

(72) Inventors: SMITH, Gerald, R.; 23910 Gill Road, Farmington, MI 48335 (US). REASONER, George, E., Jr.; 732 Waskin Drive, Tecumseh, MI 49286 (US). EDWARDS, Daniel, R.; 1202 Rue Willette, Ypsilanti, MI 48198 (US). GROSSE, Debora, Y.; 1154 McIntyre, Ann Arbor, MI 48105 (US). KIDD, Robert, C.; 590 Glendale Circle, Ann Arbor, MI 48103 (US).

(74) Agent: STARR, Mark, T.; Unisys Corporation, Township Line & Union Meeting Roads, P.O. Box 500 - C1SW19, Blue Bell, PA 19424 (US).

(81) Designated States: JP, European patent (AT, BE, CH, DE, DK, ES, FR, GB, GR, IE, IT, LU, MC, NL, PT, SE).

Published
With international search report.
Before the expiration of the time limit for amending the claims and to be republished in the event of the receipt of amendments.

(54) Title: AUTOMATIC CHECK HANDLING, USING SYNC TAGS

(57) Abstract

An electronic document-imaging arrangement which generates imaging-bits representing a given document and transfers these bits on a "per-document basis" to various successive electronic processing stages and, finally, to a data base storage means (SRM); this arrangement also including a tag stage to create tag bits unique for each such imaged document and transfer these tag bits with the imaging bits for each document to each such processing stage that handles the imaging bits, and finally to an SRM interface for final matching and removal of the tag bits.

FOR THE PURPOSES OF INFORMATION ONLY

Codes used to identify States party to the PCT on the front pages of pamphlets publishing international applications under the PCT.

AT	Austria	GB	United Kingdom	MR	Mauritania
AU	Australia	GE	Georgia	MW	Malawi
BB	Barbados	GN	Guinea	NE	Niger
BE	Belgium	GR	Greece	NL	Netherlands
BF	Burkina Faso	HU	Hungary	NO	Norway
BG	Bulgaria	IE	Ireland	NZ	New Zealand
BJ	Benin	IT	Italy	PL	Poland
BR	Brazil	JP	Japan	PT	Portugal
BY	Belarus	KE	Kenya	RO	Romania
CA	Canada	KG	Kyrgystan	RU	Russian Federation
CF	Central African Republic	KP	Democratic People's Republic of Korea	SD	Sudan
CG	Congo			SE	Sweden
CH	Switzerland	KR	Republic of Korea	SI	Slovenia
CI	Côte d'Ivoire	KZ	Kazakhstan	SK	Slovakia
CM	Cameroon	LI	Liechtenstein	SN	Senegal
CN	China	LK	Sri Lanka	TD	Chad
CS	Czechoslovakia	LU	Luxembourg	TG	Togo
CZ	Czech Republic	LV	Latvia	TJ	Tajikistan
DE	Germany	MC	Monaco	TT	Trinidad and Tobago
DK	Denmark	MD	Republic of Moldova	UA	Ukraine
ES	Spain	MG	Madagascar	US	United States of America
FI	Finland	ML	Mali	UZ	Uzbekistan
FR	France	MN	Mongolia	VN	Viet Nam
GA	Gabon				

Title

AUTOMATIC CHECK HANDLING, USING SYNC TAGS

FIELD OF THE INVENTION

This invention relates to the automatic handling of checks and like documents and, more particularly, to a method and apparatus for modified reproducing of such while using "sync tags".

BACKGROUND OF THE INVENTION

Workers familiar with automatically handling and processing financial documents (e.g., sorting checks and

deriving information therefrom) will, at times, want to lift data (e.g., image portions) therefrom. Such data can be automatically, electronically processed and rearranged. So doing is a general object of this case.

In such processing, they, at times, create an electronic digital image of each document as it passes an imaging station (e.g., as simplistically illustrated in Fig. 1D). In Fig. 1D there is shown a financial document sorting system having a typical document sorter 12, which in the preferred embodiment of this invention, comprises a model DP1800 sorter which is manufactured by the UNISYS Corporation of Blue Bell, Pennsylvania.

Sorter 12 contains a track 14 along which a plurality of financial documents 16 (e.g., checks) passes. Sorter 12 includes a magnetic character reader 18 and magnetic strip character controller 20, as well as a document holder 22 and a pipelined image processor (imaging station) 24.

Controller 20 is coupled to reader 18 via signals on a bus 26, to a host computer 28 by signals on a bus 30, and to the pipelined image processor 24 by signals on a bus

32. A computer 28 is coupled to an image storage module 34 by signals on a bus 36, while image storage module 34 is also coupled to the pipelined image processor 24 and to a plurality of workstations 38 via signals on a buses 40 and 42, respectively.

In operation, documents 16 sequentially pass reader 18 which reads a typical code appearing upon the usual MICR codeline strip which is normally placed upon each of the documents 16. The code read-out is then sent to computer 28 by signals on bus 30 for storage therein, and also to processor 24 by signals on bus 32. As each document 16 further proceeds, it passes imaging station 24 which creates a digital electronic image of the document, and sends this processed image data, via signals on bus 40, to image storage module 34 for storage therein. After passing station 24, each document is then sorted, by sorter 12, in the usual way (based on the contents of the MICR codeline) and is held at document holder 22.

After a typical prescribed block of such documents 16 has been sorted as aforedescribed, workstations 38, via signals on bus 42, may sequentially request document image data from storage module 34. This

image data is then downloaded to a workstation 38, via signals on bus 42, along with associated magnetic code data obtained from host computer 28.

After such image data is so captured at a workstation 38, an operator may electronically enter the dollar amount (e.g., courtesy amount) on each document and electronically resolve any associated inconsistencies. Each image's dollar amount and associated corrections then form a single record which is sent to computer 28, via signals on bus 42, where it may later be accessed for use in automatically inscribing the dollar amount and corrections upon the document. Therefore, the aforementioned document sort system 10 substantially eliminates manual handling of an individual document 16, once its associated dollar amount is so verified and inscribed, to thereby increase the efficiency, speed and timeliness of the overall document sorting system 10.

Within Image Processor 24 in Fig. 1D is placed one of "n" JPEG Processing/Compression stages (24-A). Two of these JPEG Processing/Compression paths are implemented on a Histogram/Compressor printed circuit board assembly (PCBA) shown in Fig. 1C.

Compression, etc.:

In one type of document processor, front and rear images of a document are captured, enhanced, and compressed by two independent mechanisms. Following compression, the front and rear images are combined with additional information specific to the document (previously received from the document processor), and stored in a database, separate from the document processor, for subsequent retrieval.

A hardware/software failure can cause the electronic images in the (front and rear image) processing stages to become unsynchronized; e.g.. Typically, because one or more images are skipped on one side; or, the front and rear image bits may be synchronized with one another, but may not be synchronized with ancillary document information ("collateral document data" that is associated with the image bits). If this condition goes undetected, then the front and/or rear image bits will not be stored with the proper document record in the database.

Thus, it will be understood as useful to have a method of identifying (both set of) image bits, especially where the image data is to be reliably co-identified with

collateral document data. Such "identification-bits" should be carried with the image data through the various stages of processing, so the image's identity can be maintained at each processing station, and can be transferred to a downstream processing station. Such identification-bits should be available at the point where the front and rear image data, and "collateral document data" are merged to ensure that a full, correct data set is being combined for transfer to the database. Thus, a salient object hereof is to so identify image data; especially with "sync bits" as detailed below.

Artisans will sometimes pre-process such data (bits) and then to compress it. Another object hereof is to preprocess such data and then compress it. A related object is to do so for imaging data which is presented in a multi-bit data stream, for compressing and reducing the bits, and sending the results to utilization means, preferably in an arrangement which comprises a preprocessing (buffer) stage for digitizing and scaling, then presenting the data stream in two parallel bit-streams, plus a compression stage providing two parallel like compression paths for the in/out streams via a prescribed first compression-processing and then via a

prescribed second compression-processing to provide a prescribed time-compressed output to the utilization means. A related general object is to execute such compression in "real time" and according to JPEG standards. Another general object is to yield better compression of a data stream, along with normalizing and scaling it, while using "sync tag" identifiers.

BRIEF DESCRIPTION OF THE DRAWINGS

For a more complete understanding of the present invention, and advantages thereof, reference may be made to the following detailed description taken in conjunction with the accompanying drawings, in which:

Fig. 1D is a generalized block diagram of a typical document processing (sorting) system, while Fig. 1B is a block diagram indicating the transfer of "sync-tag" data through such a document processing system; while Fig. 1C is a like showing of a dual-path Histogram/Compressor unit thereof;

Fig. 2A is a block diagram of image processing portions of such a system indicating exemplary use (flow) of "sync tag" data according to this invention, while

Fig. 2 illustrates the functions of Digitizing, Normalize/Scaling (N/S) and Processing/Compression of an exemplary document; Fig. 3 is a block diagram illustrating a single Processing/Compression path in such a system;

Fig. 1A is a very general block diagram of part of a document sorter system, while Fig. 1 is a block diagram of a document imaging module embodiment for such a system;

Fig. 4 is a diagram of eight related processing paths;

Fig. 5 is an item-related diagram of a subdivided Input Buffer for the array in Fig. 3, while Figs. 6 (6A-6D) indicate how the item in Fig. 5 is preferably addressed and processed;

Fig. 7 similarly illustrates how the top/bottom of the item are detected for such processing in two four-channel streams;

Figs. 1'-5' depict a related scaler embodiment; and

Figs. 8-10 relate to the "sync tag", i.e.:

Fig. 8 is a plot of related exemplary processing signals and video/status data;

Fig. 9 details the makeup of a preferred Normalizer/Scaler Unit; and

Fig. 10 gives the makeup of a preferred JPEG Compressed Data Buffer.

DETAILED DESCRIPTION

System Overview:

Figure 1A will be understood to depict part of a Financial Item Sorting System 10 having a typical Item Sorter (e.g., in the preferred embodiment of this invention, a Model DP 1800 sorter which is manufactured by the Unisys Corporation of Blue Bell, PA).

Sorter 12 contains a Track for transport of checks or like Financial Items to be processed, e.g., by a typical reader and related controller. Additionally, the Sorter contains a Camera Assembly, and an Image Processor 24 apt for use in accordance with the teachings of the preferred embodiment of this invention.

Controller 20 is coupled to the Reader and to a Host Computer 28, as well as to Image Processor 24, as known in the art. An Image Storage Module 34 is also coupled to the Image Processor 24 and to a plurality of Workstations ws. The Camera Assembly is coupled to the Image Processor 24.

In operation, checks or like Items sequentially pass the Reader which can read a typical magnetic code

thereon. The code read-out is then sent to Computer 28, for storage therein and to Image Processor 24. As each Item travels along the Track, it passes the Camera System which captures an image thereof and outputs a digital representation of the image to the Image Processor 24. This digital representation comprises a plurality of image pixels having an intensity which can be represented by an "intensity-number" between 0 and 255. Image Processor 24 then processes this digitized image and sends the associated signals to the Image Storage Module 34 for storage therein. After this, the documents are then sorted and stored in the usual way.

After a typical block of checks has been processed in this manner, an operator at one of the Workstations may request the aforementioned image bits from Storage Module 34. These bits are then downloaded to his Workstation along with their associated identifying magnetic code data obtained from Host Computer 28.

After these bit sets of (images) are captured by a Workstation, an operator may electronically enter associated data (e.g., check dollar-amount) with a given document-image and electronically resolve any difficulties;

(e.g., an error in reading the magnetic code thereon) entering and storing the needed correction for the image. Each digitized image and its associated data and corrections then form a single corrected, completed electronic computerized record which can then be sent to Storage Module 34. Thereafter, it may be accessed for use in automatically inscribing associated data (e.g., dollar amount, corrections) upon the stored Items. In this way, item Sorting System 10 substantially eliminates the manual handling of Items 16 when an associated dollar amount is placed thereon, thereby increasing the efficiency and timeliness of sorting and processing.

Compression Stages:

Within Image Processor 24 is placed one of "n" JPEG processing/compression Stages according to a feature hereof. Two of these JPEG processing/compression paths are preferably implemented on a Histogram/Compression printed circuit board assembly (PCBA) as shown in Fig. 1C.

Image Processor 24 of Fig. 1A is preferably characterized by the following: an Image Digitizer Unit (D of Fig. 2) for analog to digital conversion of the captured image, a Normalizer/Scaler (N/S Unit Fig. 2) for

normalization and scaling of the video image, a set of "n", parallel JPEG Processing/Compression Units (J1 etc. of Fig. 2 and 24-A of Fig. 1A) for image processing/JPEG compression and a JPEG Compressed Data Buffer Unit (JCDB in Fig. 2) for collection and temporary storage of compressed images from the JPEG Processing/Compression Units. [Note "JPEG" refers to the compression standard by the "Joint Photographic Experts Group".]

These functions are implemented especially to meet the performance requirements of a high speed check process (imaging) system and to minimize the cost of the system by reducing the amount of "parallel hardware" needed to compress images. A preferred "dual" Processing/Compression Stage (for JPEG) is indicated in Fig. 1C.

The JPEG compression hardware performs image processing on a 128 grey level, scaled image before executing a two-pass JPEG compression. Scaling is nominally at 137.5 dpi but can range from 137.5 dpi to 50 dpi in steps of 12.5 dpi. This two-pass compression is designed--according to this feature--to reduce images to a predictable "packet size" apt for use in the entire High-

Speed Check Imaging System. These functions of the JPEG "P/C" (Processing/Compression) hardware, (detailed below) must be performed, here, in real time on check images as they move down a high-speed Check Sorter Track at an approximate rate of 1800 checks per minute.

It is not possible, within the environment of the high-speed Check Imaging System (detailed below), for a single JPEG "P/C" (Processing/Compression) path to process every check in real time. Therefore, multiple JPEG "P/C" paths, operating in parallel, are needed (e.g., see Fig. 1-C). To reduce the time required for each processing/compression path to operate on an image (and therefore reduce the number of parallel paths needed to maintain system performance), many of the required functions of the JPEG "P/C" path have been implemented in hardware. The detailed explanation of each of these functions is described below.

<u>System Environment</u>:

A JPEG "P/C" (Process/Compression) path as here contemplated, will perform image processing and real time JPEG compression of normalized and scaled images of documents (e.g. checks) captured in a Check Sorter at an

average rate of 1800 checks per minute. The diagram in Figure 2 indicates conditions under which each JPEG "P/C" path preferably operates and the performance required of such a unit to maintain overall system performance.

Figure 2 shows the processing of a sample of check images as they move left to right across the page, simulating the way a check would move through a Check Sorter. (Here, track speed of sorter assumed to be 300 inches per second; this means that a check 6 inches long will take 20ms to pass a fixed point on the Sorter Track.) Here, checks can range in length from 5.75 inches to 9 inches (19ms to 30ms), with inter-checks-gaps ranging from 1.5 inches (5ms) to several inches.

The check images are captured by camera means, here preferably comprised of a vertical, 1024-element CCD array which samples 256 grey levels per pixel (8 bits) with a resolution of 200 pixels per inch. In the vertical direction, the Camera can capture images up to 5.12 inches high. The 1024 element array takes a snapshot of the check every 16.66us as it moves down the Sorter Track, yielding a horizontal capture resolution of 200 pixels per inch. These 1024 pixel scans (captured every 16.66us by the CCD

array) are divided into eight 128 pixel Channels (shown as CH 0 through CH 7 in Fig. 2, each composed of 128 pixel scans). Hardware in the Digitizer D converts each 128 pixel scan into eight serial streams of pixels, with one pixel being output approximately every 130ns.

The N/S (Normalizer/Scaler) hardware next normalizes the pixel values from the 1024 CCD elements and then scales the image down. The maximum resolution after scaling is 137.5 (11/16ths scaling of 200 dpi captured image) pixels per inch in both dimensions (e.g., see example shown in Fig. 2--and see Figs. 1'-5' described below). In this example the 128 pixel scans in each Channel are reduced to 88 pixels per scan. The N/S hardware "time-multiplexes" four channels' worth of data onto two, 8-bit serial outputs to the JPEG "P/C" hardware. The 88 pixels from all four "even numbered" (total of 352 pixels per scan at 137.5 dpi) Channels (0, 2, 4, 6) are time-multiplexed along one serial stream, while the pixels from the four "odd" Channels (1, 3, 5 and 7) are multiplexed along a second serial stream. The two serial pixel streams operate at 50ns/pixel (20 MHz) to guarantee that all 352 pixels per scan on each serial path can be

transferred to the JPEG "P/C" hardware before the next scan is transferred.

A pair of JPEG "P/C" paths are preferably implemented on an H/C PCB (Histogram/Compressor Printed Circuit Board, as indicated in Fig. 1C). This H/C PCB must detect the image dimensions and perform image processing on the scaled image prior to compression. Selected image processing algorithms require a grey level histogram of the entire image prior to execution. This means the entire image must be buffered (e.g., at 3-1, Fig. 3) and a histogram generated (e.g., at 3-7) before image processing can begin. Once image processing is complete, compression can begin.

The performance of the entire image system is what dictates how the JPEG Processing/Compression hardware will reduce each image to a target packet size; this is why the here-detailed JPEG Compression hardware embodiment executes a 2-pass compression. The first pass uses a "standard" QM (Quantization Matrix) for JPEG compression. The results of the first pass compression, as well as the detected image dimensions, are used to pick a second QM for

a second, final compression that will reduce the scaled image to the desired compressed packet size.

To maintain system performance, the JPEG Processing/Compression hardware must perform all these functions in real time which equates to generating a JPEG compression packet in 20ms for a 6-inch check. Because a single JPEG "P/C" path cannot meet these requirements, multiple paths operating in parallel are required. The described H/C PCB was equipped with two independent JPEG "P/C" paths for this purpose (see Figs. 3, 1C; preferably, the system has locations for up to 4 H/C PCBs, for Front/Rear imaging, this means the system can have as many as 8 JPEG compression paths operating in parallel; e.g., two for each H/C PCB--i.e., a pair on each side). For example, Fig. 4 indicates how two JPEG processing/compression paths are implemented on one H/C PCBA and how up to 4 H/Cs can be used on each side (front and back) of the imaging system.

Image Module, IM; Fig. 1:

The JPEG Image Module (IM) is a device that in conjunction with a document processor allows image data from the front and rear of documents to be collected,

compressed, packaged and (finally) transmitted to a mass storage device. The document processor is a device which is capable of transporting documents down a track, reading data encoded on the documents and providing that data to an application program running on a host computer and (finally) sorting documents to bins based upon that information. The IM provides outputs to alternative recognition devices such as a Courtesy Amount Reader (CAR) unit (1-23, Fig. 1) and mass storage devices such as a Storage Retrieval Module (SRM: 1-20, Fig. 1). Images can be retrieved from the SRM for data entry, or data correction. The new, augmented or corrected data is then passed on to the application mainframe. Data read by the CAR unit is also returned to the application mainframe. In this way the document data base can be more economically updated and corrected for use by the application program.

Fig. 1 is a block diagram of major functional portions of such an imaging module IM, apt for use with this invention. Preferably, module IM is used, as a printed circuit unit (board) for imaging/processing of images from one side of passing documents, with a second, like board (not shown) used for the other (Rear) side.

Module IM produces compressed 8-bit gray level (electronic) images (image data) at resolutions of about 100 pixels per inch. Image data is compressed using a "JPEG Baseline Sequential technique. JPEG is a family of gray scale image compression techniques adopted by the International Standards Organization (ISO) Joint Photographic Expert Group (JPEG) subcommittee, as workers realize. The compressed images are encapsulated in a Tagged Image File Format format (TIFF). TIFF is an industry standard format for the encapsulation of image data, as workers realize.

Salient Functional Units:

In Fig. 1, it will be evident that an electronic camera Unit 1-1 captures successive images (e.g., of passing checks or like financial documents, front and rear, suitably illuminated; e.g., lamp illumination controlled by Unit 1-3). The camera uses a segmented linear "Charge Coupled Photo Diode" (CCPD) array ("segmented" meaning that the linear array of photo-diodes is subdivided into 8 segments or channels, each of which has its own output, thus effectively multiplying by the number of subdivisions the rate at which image data can be clocked-out--here the channels are numbered 0 through 7). The electronic image

from each channel is digitized by an Image Digitizer 1-5 and presented, in parallel, to a pair of like Normalizer/Scaler (N/S) units: a master N/S 1-7 and a slave N/S 1-9 (e.g., on separate boards, each for identically processing four video data channels--e.g., four "even" numbered channels on Master, four odd on Slave). These channels are merged into a single output channel for compression (as further detailed below). Their output, the scaled-normalized image signal path, is indicated in Fig. 1. The transfers of data between the Digitizer, N/S, and other functions are more diagrammatically illustrated in Fig. 2, while processing/compression is further, similarly illustrated in Fig. 3. An additional output of normalized (unscaled) image data comes from each N/S board to provide image data to a CAR system 1-22, 1-21, 1-23. The output of the two N/S boards is presented to a Histogram/Compressor (HC) array preferably comprising from two to four like units (boards) 1-11A, 1-11B, 1-11C and 1-11D operating in parallel. The number of boards depends on required throughput (in documents per second) as determined by the document processors throughput and the type of error detection required. Each unit 1-11 processes and compresses image data from N/S units 1-7, 1-9 and

implements two like independent data paths, each of which can process an entire single image.

The two paths on the H/C board can independently process and compress separate images or can compress synchronously the same image and compare compression result to detect failures. The sequencing of image data into, and compressed data from, the H/Cs is controlled by a state machine in the JPEG Compressed Data Buffer (JCDB) 1-15. When a HC's path's compression is complete it signals the JCDB. When the JCDB is ready to accept data from that path, it signals that path to output data for storage on the JCDB. A signal PDOCPRES_N which is activated when the N/S detects that a document is in front of the camera is applied from the N/S units to JCDB 1-15, whose state machine uses it to sequentially allocate images to H/C paths.

Buffer JCDB 1-15 is coupled to a Main Processor (MP) 1-16 which packages the JPEG compressed image data into the TIFF format employed by the system.

<u>Further on Module IM, Fig. 1</u>:

The compressed data is transferred from the MP 1-16 to the Point-to-point Optical Link (POL board 1-19 which is a fiber-optic interface) for transmission to the Storage and Retrieval Module (SRM) 1-20. The SRM stores the images and, under the direction of the application mainframe, manages the TIFF packaged compressed image files for later distribution to image workstations (not shown) for viewing, correction or entry of associated document data.

The Diagnostic Transport Interface (DTI) 1-17 is one end of the interface between the document processor and imaging module IM. The Image Interface Board (IIB) 1-18 resides in the document processor and sends document data and control signals from the document processor to the DTI. The DTI receives this data and passes document data, across the Main Bus, to MP 1-16 for inclusion in the TIFF packet for the associated compressed image. The DTI also receives control signals from the document processor's tracking logic through the IIB 1-18 that indicate that a document is approaching the camera. These signals are passed on to N/S boards 1-7, 1-9 where they are used to prime the edge detection circuits to detect the leading and trailing edges of documents passing the camera (along the track).

The Character Recognition (CAR) subsystem 1-21,1-22 and 1-23 subsystem consists of two circuit boards: (see CAR Preprocessor or Bypass 1-22, CAR Port 1-21 and the CAR Unit 1-23). Here, only the Front N/S boards are linked to CAR subsystem. Both boards perform specialized image processing functions on the normalized image data from the N/S boards, they improve the chances that the Character Recognition Unit (CAR Unit) 1-23 will successfully read information from the document. After these processing steps the processed image data is sent to the CAR unit for recognition of data. The results of reading the data are returned to the document processor for inclusion in the data files stored on the application software mainframe. The information read successfully from the documents can be used to correct the data files on the mainframe.

Image and Data Synchronization:

Module IM (Fig. 1) can be processing, compressing or storing images and be documenting data for as many as 25 images at any one time. It is important to make sure that the document's images and associated document data from the document processor remain in synchronization so documents are not misidentified.

As documents begin to move down the track of the document processor each document is detected by tracking logic (see below) and assigned a tracking identification code ("sync tag"). The sync tags are assigned sequentially to each image (e.g., by Software in DTI) to identify it and prevent its loss, as well as help later in sorting. It preferably is triggered on detection of a check (document) leading edge and comprises a 16-bit identifier code (for image, -frame etc.) assigned in FIFO order; preferably supplied by the DTI unit.

Operation of the document processor is such that there are multiple documents moving through the track at any one time. The document processor tracking logic is used to determine the physical location of a document in the track. The document processor also has subsystems, such as Magnetic Ink Character Recognition (MICR), readers that may generate data that is subsequently associated with the document moving through that subsystem. Module IM receives the sync tags and document data and queues them up in the memory of Main Processor (MP) 1-16, in a first in first out (FIFO) fashion; likewise the sync tags are stored in a FIFO queue on the NS. When a document moving down the track approaches IM camera 1-1, the tracking logic senses

it and a signal is sent to the IM to alert the NS to find the leading edge of the document. When the document is found it activates the PDOCPRES_N signal, thus alerting the H/C units to the forthcoming image data. When the trailing edge of the document is detected by the tracking logic it sends a signal to module IM to alert the NS to find this trailing edge. When the trailing edge is found, the document's sync tag (see Fig. 3A) is pulled from the queue in the N/S and attached to the "document status field" (which is appended to the trailing end of the related image data).

The foregoing may be understood as applying to imaging of one side (e.g., Front) of a passing document. Processing image data for the other side (e.g., rear of a document) proceeds in a similar manner--preferably with a separate independent camera, digitizer, NS, HC, and JCDB boards.

The sync tags are used in module IM in the following ways to assure that image data from a given document are kept "in sync" (i.e., in sequence, same for any given document):

1 -- When the NS finishes processing an item, the Diagnostic Transport Interface (DTI) checks to make sure that the sync tags from both the front and rear master NS are the expected "next tags" (in sequence) and that they are identical.

2 -- The H/Cs use the sync tags to assure that the image data from the master and slave NS units are identical, assuring that these boards are "in synchronization" (i.e., handling data from same document). The HCs compress the image, then the sync tags are passed along with the compressed-image-data to the JCDBs, where they are queued-up (in FIFO fashion).

3 -- The JCDB interrupts the MP when it has image data available. The MP reads the image data and status bits (which include the sync tag) from the JCDB, and checks to see that the sync tag from the image read from the JCDB matches the expected sync tag as stored in its own memory queue.

4 -- The sync tag is also fed to the "CAR PREPROCESSOR OR BYPASS" 1-22 and Carport

board 1-21 to keep the CAR unit synchronized with document processor flow.

Whenever a mismatch of sync tags is found, an error is declared and document processor flow is ordered to stop.

"Stop Flow" Requests:

According to a feature hereof, a "Stop Flow Request" (SFR) is generated by DTI,, JCDB, N/S, H/C or ID when they detect an "error condition": e.g., sync tag mismatch, or incorrectly matching document data with image data, or detection of conditions that would corrupt or render an image unusable. The JCDB detects such an SFR signal and interrupts the MP (e.g., before check processing is carried further); e.g., JCDB detects the SFR and latches the source thereof in a Stop Flow Accumulator (contained on the JCDB) for interrogation by the MP. Use of such Stop Flow Requests will reduce the number of documents, time, and complexity that would later be involved in "error recovery".

An example is as follows: a "leading edge not found" fault might be detected at NS unit (signal from the tracking logic received, alerting the IM to arrival of a document but the edge of the document cannot be determined from the image data). As a result, the N/S unit would issue a SFR to processor MP through the JCDB, terminating further processing of all images from this document--as well as of other items upstream of this item in the document processor's track. The MP first notifies the

document processor to stop the flow of documents, and then finishes handling the image data it has confidence in (e.g., compressed images downstream of the point of fault detection). The mishandled document, and any documents that followed it through the transport, will have to be recovered from the document processor's pockets and repassed through the document processor on resumption of processing. This system may be set up for various Stop Flow requirements (according to the application involved) and to automatically, programmatically "mask" certain faults accordingly. For example some application could require a SFR if the trailing edge of a document is not found, yet other applications could be more forgiving and not require a SFR for this situation.

The advantage of this Stop Flow feature is that it reduces the number of documents that have to be repassed through the document processor when a SFR occurs ---- because the processor is notified immediately when an error condition generates a stop flow request, and because it is associated with a particular item or event; thus antecedent documents (conditions) can be handled normally, thus reducing the number of documents that must be specially handled to recover from an SFR event.

Monitor Camera, Fig. 1:

The design of module IM also accommodates adding an optional Camera Quality Monitor unit (CQM) 1-13. The CQM monitors normalized image data and normalize scaled image data from the NS boards, as well as compressed image data being sent from the HCs to the JCDB. Preferably, one CQM monitors data on the IM for the front image, the other monitors data for the rear image. A variety of problems associated with the camera can be detected by analysis of the data collected at these points. As one example: when components in illumination system 1-3 age, lamp output may dim. Monitoring the normalized data and checking for a long term change in average document brightness, can allow one to notify service personnel that replacement or adjustment is required before the images are badly degraded. The front and rear images are each monitored by their own CQM.

N/S Details (Also see Figs.1-5, Described below):

The Normalizer/Scaler function is, as above noted, preferably implemented by a two board set (e.g., see Fig. 1: Master 1-7 processing the four even-numbered channels from Digitizer 1-5; Slave 1-9 similarly processing the four odd-numbered channels therefrom). These boards 1-7, 1-9 operate in synchronism, with one, the master, arbitrating. Master N/S Unit 1-7 also provides "document synchronization" signals (such as PDOCPRES_N) used by downstream boards to identify that a document is being imaged. The N/S pair also provide image data to the CAR unit.

The N/S units employ a scan capture circuit to capture pre-normalized image data for use in generating the numeric tables required to normalize the image data during normal operation. Upon a command from the DTI, each N/S starts collecting pre-normalized image data; each channel has its own capture circuit capturing 16 consecutive scans of image data (128 bytes of data per scan) into a first in first out (FIFO) memory that can be read by the DTI board for transfer again to the MP for processing. Data is collected as part of a calibration procedure in which the camera images a uniformly white target, and then a black

target, to provide "ideal" white and black stimuli to the camera. Software running on the MP executes an algorithm that transforms this raw data into data tables suitable for normalizing image data. The data tables are transferred from the MP to the DTI and then stored in "Look Up" tables on the N/S.

The N/S normalizes incoming image data using the information in the look-up tables (preferably two 64K X 8 RAM, one for test). Normalization is accomplished by using the image data and its position in the scan to sequentially address the look-up table. The content of each address has been precalculated by the normalization software running on the MP from pre-normalized data (collected during calibration) to be the normalized value of the image data for that pre-normalized value and position in the scan. There are 128 possible output values for each of the 128 pixel positions in the scan.

Scaling is preferably based on PROM look up tables; the tables allow the selection through software running on the MP of up to 8 "scaling factors", (from a factor of 11/16), to a factor of 5/16 along with method of

scaling. The preferred scaling is 8/16 (1/2) using a 2X2 pixel window average method.

Document Edge Detection is performed with an algorithm whereby each channel compares the average brightness of "the present scan line with the average brightness of the transport with no document present". When no document is present, the detector averages and stores the average brightness of the transport ("no document brightness"). Document tracking logic in the document processor notifies these circuits that a document is about to enter, or leave, the range of the camera, and that comparisons should begin. If a significant change of brightness occurs in a channel, then (by this) that channel indicates that it has found an edge. Leading edges are found when any one of the 8 detectors finds that brightness has increased above the stored "no document average" by a preferred threshold of 14 gray levels, and PDOCPRES_N is asserted. Trailing edges are declared if all 8 channels have found that they have returned to within a preferred 18 gray levels of the "no document" average; then PDOCPRES_N is cleared. If a leading edge is expected and not found by any detectors after a prescribed time, then "leading edge indication" is "forced" by asserting PDOCPRES_N. This

implies that the document image may have problems, so this occurrence is flagged in "document status". The status data is transferred along with the normalized and scaled (and later compressed) image data as it moves through the system.

Details of Histogram Compressor, Figs. 1-3:

The Histogram/Compressor functions are, as noted above, preferably performed in two like HC boards per side. Module IM accommodates up to 4 HC boards per side if height throughput or increased levels of fault detection so require. Each H/C contains two image paths, and each path is capable of processing and compressing an entire image as received from the master and slave NS boards. The JCDB's state machine determines that an image has arrived via the PDOCPRES_N signal and selects the HC path to receive the images from the master and slave NS; paths are assigned in a rotating sequence and according to the type of fault detection required. The preferred configuration uses rotating redundancy to periodically verify HC operation; thus paths can be assigned in the following order: 0-1, 2, 3, 0, 1, 2-3, 0, 1, 2, 3, 0-1.... . etc. The HC boards contain logic that detects if the output data of the two paths does not match (when they are both processing the

same image); such a detection is an indication that a fault has occurred on one of the two paths. "Rotating redundancy" is useful for checking for "hard failures". If "transient failures" are of concern to a particular application, then additional HC boards can be added to the system and image data can be processed fully redundantly. As a feature hereof, this HC unit allows comparison of two compressed images in their entirety (e.g., vs by-channels).

A HC path receives the combined data from the master and slave NS boards and combines the odd and even channel data into one image which is stored in a buffer memory (3-1, Fig. 3). As the data is being input to the memory, it is sampled by a histogram width-detector 3-5, and a top and bottom edge detector 3-3. The histogram circuit 3-7 builds a histogram of image data values composing the document image. The histogram data is used to modify the image (as described later). The top and bottom edge detectors 3-3 sample the image data and attempt to find the top and bottom of the document image (within the full height of the input data scan).

There are 1024 pixels in the preferred embodiment of the IM scan; a typical 2.75 inch item will occupy only

550 pixels of a scan. The preferred algorithm looks for the highest and lowest occurrences of "non-background data" within all the scans of a document. In the preferred embodiment, a "non-background" is declared if there is a gray level transition within 5 pixels. The points determined for top and bottom, and width, are made available to the Digital Signa, Processor (DSP 3-15) which uses them when pulling the document image from the buffer. Finding the width (e.g., lead and trail edges) and the top and bottom of images allows the Digital Signal Processor 3-15 (DSP) to handle only genuine document data and ignore all else --- thus improving throughput and providing images that do not have extraneous data associated with them.

The software running on DSP 3-15 executes an algorithm which uses the histogram data to alter the original image data in the HC memory in a manner that reduces contrast and stretches gray levels --- thereby improving legibility and compression characteristics (by means of the Remap 3-13).

The HC compresses images in "two pass" fashion. The first pass preferably uses a JPEG Quantization Matrix (QM). The QM is a set of numeric factors used by the JPEG

algorithm to affect image compressibility and is known to workers. The preferred (or target) QM is picked in the course of IM design to optimize both image quality and the size of the resulting compressed image packet. The same QM is used for first pass compression of all images.

When "First compression" is complete, the size of the compressed image data packet is checked, along with image size. If the packet is too large (considering the size of the image), an alternative QM is used for "second pass compression"; the alternative picked is determined from experience and is embodied in the algorithm executing on the DSP. If the packet is smaller than expected, a less aggressive QM may be used; otherwise the target QM is reused.

After second pass compression, the HC builds a standard JPEG compressed image structure in Output Buffer 3-25 and appends to it the status bits received from the NS 3-9, along with its own status bits and other information.

When compression is complete, data is queued in Output Buffer 3-25, and the JCDB is notified that the path-work is completed. The JCDB notifies the HC that it is ready to receive the compressed data packet (and status) when it selects the HC for output.

Thus, a typical such HC unit (e.g., 1-11A for bits 0, 1) may do the following:

1 - Sample alternate pixels and assign one of 64 "bins";

2 - Locate image-top, -bottom

3 - Measure image-length

4 - Using its DSP (digital signal processor) histogram data, generate a "Remap Table" to reduce contrast and stretch grey level, and so make the bit image more legible and more compressible;

5 - Initiate first compression;

6 - Monitor results of First compression (and "status" from associated N/S unit) to build "header" in JCDB. And, if maximum allowed compressed size is exceeded, will accordingly translate images (from the bottom); and initiate a second compression if needed; and

7 - Prepare bit set for application to JCDB.

JCDB:

Buffer JCDB 1-15 (Fig. 1) provides the interface between the HC paths and the MP 1-16. It preferably comprises a set (e.g., 16 X 128 kilobyte) of compressed image buffer units, preferably operated as eight redundant buffer pairs (Primary-, Secondary-). The contents of the primary buffer is compared to the contents of the secondary

buffer, upon readout, as a method of validating hardware performance. These buffers are directly readable and writable by the MP via a local bus extension of the microprocessor of the MP. Should extra buffering capacity be needed, (e.g., the POL is busy), the JCDB can fall out of redundant operation and use its 8 secondary buffers to store images. When this happens, the MP notifies the document processor to STOP document flow because there is a danger of running out of buffer space (which could necessitate a complex recovery procedure). The JCDB, as noted earlier, has a state machine which controls the selection of NS-to-HC paths for input of images from the NSs and the transfer of compressed image packets out of the HCs to the JCDB. Preferably, the MP can program the state machine on the JCDB to operate module IM with 2, 3, or 4 HC boards. The JCDB also receives the Stop Flow Request lines from all boards. If any of these lines is activated the JCDB notifies the MP. Each of the NS, HC, or JCDB boards in module IM can have any of their detected fault conditions activated, by command from the MP, to trigger a "Stop Flow request" line to the JCDB. Results of this activation were discussed earlier.

Functions of JCDB:

(a) Controls selection of paths (input/output) to/from HC;

Thus, can be programmed to operate with 2, 3 or 4 HC boards; also controls run-time testing of HC units by selecting both of its paths to process image data. Also, monitors "busy" and "ready" signals from HC units to accommodate document throughput;

(b) Verifies size of transferred image;(c) Provides "Sync Tag" data from a received image to DTI for verification;

(d) Generates "interrupts" (e.g., "STOP Flow"?) to MP and DTI upon receipt of image from HC array.

Image Digitizer 1-5:

Image Digitizer ID 1-5, receives the output of the camera in the form of 8 pairs of analog signals (e.g., 8-odd, 8-even pixels from 8-segment CCPD) plus a clock signal, and a "camera side" identification (front vs rear). The "side information" is determined at time of manufacture by installing a jumper. Preferably, this ID output comprises: eight channels of serial, digitized video, with parity for each channel. The preferred clock rate is 8.125 MHz, with a 900ns idle period between every scanline (16.7us). Digitizer ID also has a diagnostic memory that

can be loaded with test patterns by the DTI over a special (C and D) bus.

When the document processor tracking logic does not indicate any documents approaching the camera, the DTI senses this and commands a diagnostic RAM to inject test patterns into the eight channels. Identical data will be output on all 8 channels. These patterns are used by the NS to test normalization and scaling logic (by comparing data); they are also similarly used to test the interface between the ID and NS boards. The NS normalization circuit must alter its operation when test patterns are present on the channels to assure that the outputs of the multiple normalizer circuits are identical. The test portion of the normalizer look-up table is used to provide a 1 to 1 mapping when test patterns are activated, thus assuring that "data-in" matches "data-out".

JPEG Compression Path Functions:

The Block diagram in Fig. 3 (as aforenoted) indicates the preferred functions performed along a single JPEG processing/compression path on a preferred H/C PCB. Two independent JPEG processing/compression paths are implemented on each H/C PCB. These blocks are characterized briefly as follows:

a - N/S Inputs:

The JPEG compression path receives "Normalized Scaled" (N/S) image data from the N/S hardware in two serial, 8-bit paths (see two N/S inputs, to 3-1, -3, -5, -7, -9). Each path contains 4 Channels of time-multiplexed, scaled scans; scaled-down to a maximum of 137.5 pixels per inch. The pixels are delivered cross both paths at a rate of 50ns per pixel (20 MHz). Each pixel is 7 bits representing 128 grey levels with the MSB ("Most Significant Bit") of the 8-bit path set to 0.

b - Input Buffer, 3-1:

The entire scaled image is stored in a 1Meg x 8 Buffer 3-1 as it is delivered from the N/S hardware.

c - Top/Bottom Detect, 3-3:

As the image is being received from the N/S hardware and stored in Input Buffer 3-1, the Top/Bottom Detect Circuitry 3-3 finds the Top and Bottom of the scaled image. The

picture shown in Fig. 3 illustrates an exaggerated skew condition that may occur (usually to a much smaller degree) as the sorter moves the check past the CCD camera. The Top/Bottom Circuitry "finds" the extreme Top and Bottom locations.

d - Width Detect, 3-5:

Lead-edge and Trail-edge detection is done by the N/S hardware. The Width Detect hardware (Stage 3-5) counts the number of scaled pixels scans between the extreme Lead and Trail edges as shown in Fig. 3.

e - Histogram, 3-7:

As the image is being received from the N/S hardware and stored in the Input Buffer, a Histogram Circuit 3-7 samples every other pixel (one pixel every 50ns, switching between both signals paths from the N/S hardware) and sorts the 128 grey level pixels into one of 64 Histogram Bins (LSB, or Least Significant Bit, of 7-bit pixel value is ignored). Once the image is

entirely received, the final Histogram will have sorted 50% of the scaled image's pixels, selected in a checkerboard arrangement across the entire image, into the 64 bins that comprise the Histogram 3-7. Pixels above and below the detected Top and Bottom borders of the image are included in the Histogram, but pixels outside the detected Width are excluded. Each bin can record up to 64K occurrences of adjacent grey levels and will "peg" at 64K if that bin overflows.

f - Status Block 3-9:

Status and other image-related information is appended to the Trailing Edge of the scaled image as it is delivered to the JPEG processing/compression path from the N/S hardware. This information is buffered in Status block 3-9 so that it can be retrieved and sent on with the compressed image.

g - Transpose and Block Unit 3-11:

The N/S hardware delivers scaled image data in Vertical scans spanning 8 Channels and starting from either the Top or Bottom of the image (depending on camera orientation), while moving vertically. JPEG compression requires image pixels to be compressed in 8x8, raster-scanned, Pixel Blocks. Pixel Blocks are then scanned in the same method as pixels within a block: horizontally across the Width of the image, and then vertically between the Top and the Bottom. This "Transposition and Blocking" Operation (3-11) can be started at any of the four corners of the image. Pixels outside the Top and Bottom borders of the image, and outside the Width of the image, are not addressed during transposition--thus eliminating useless track background data from the Compressed Image Packet. The output of the Transpose and Block Circuitry 3-11 serves as an address to the 1 Meg x 8 Input Buffer 3-1. (See Fig. 6, also.)

h - Remap Unit 3-13:

Image processing is done by changing (Remapping at 3-13) the 7-bit scaled pixels in the Input Buffer 3-1 to 8-bit image-processed pixels as the image is being compressed.

h' - DSP Unit 3-15:

A DSP Unit 3-15 (Digital Signal Processor) determines the Remap Values by reading the 64-bin Histogram (from 3-7) along with inputs from 3-9, 3-5, 3-3), executing the image processing algorithms and loading the 128 resultant "Remap Values" into a "1 to 1" Remap Memory at 3-13.

j - LSI JPEG Compression, 3-17:

A DCT (Discrete Cosine Transform), quantization and Huffman coding for JPEG compression are done in a Chip Set, (3-17, preferably from the LSI Logic Corporation). This Chip Set 3-17 does not need to be "throttled" as it compresses an image, and, therefore, "compression latency" through this Chip Set is deterministic. Scaled,

remapped pixels are sent through the LSI Chip Set 3-17 at a 25 MHz rate. The LSI output is a 32-bit word containing JPEG compressed data (but does not have bytes "stuffed" or restart codes inserted, these being inserted at Block 3-19).

k - Packet Counter 3-21:

This Counter records the amount of compressed data emerging from the LSI JPEG Compression Chip Set 3-17. This Count is used by the DSP Unit 3-15 to retrieve the results of first pass compression so a second QM can be selected for the second (final) compression.

l - Post Processor 3-19:

The Post Processor performs the JPEG required byte stuffing and Restart Marker insertion not done by the LSI Chip Set. The Post Processor funnels the 32-bit outputs from the LSI Chip Set down to a 16-bit wide Output Buffer 3-25, inserting stuffed bytes and restart codes when necessary.

To ease the location of entropy-coded segments (compressed data between Restart Markers) in the final Compressed Image Packet, restart codes are inserted on 32-bit boundaries by the Post Processor Unit 3-19 (codes recorded in 3-23). Therefore, the Post Processor must insert padding bytes, when required, to align restart codes on double-word boundaries.

m - Restart Marker Table (FIFO) 3-23:
A table of addresses pointing to the location of Restart Markers in the Compressed Image Packet are stored in the Restart Marker FIFO 3-23 and can be used by the DSP 3-15 to truncate images on entropy coded segment boundaries.

n - Output Buffer 3-25:
The JPEG processing/compression path assembles the Compressed Image Packet in a 64K x 16 Output Buffer 3-25. Once a Compressed Image Packet is completely assembled, it can be burst-transferred to

the JCDB next component (JPEG Compressed Data Buffer) in the imaging system.

In sum, the DSP 3-15 performs the following functions:

i - After an image is input from the N/S, the DSP 3-15 reads the 64-bin Histogram, executes the image processing algorithms and loads the resultant Remap Table into the Remap RAM (at 3-13);

ii - Prior to first pass compression, the DSP loads the default QM and Huffman tables into the LSI JPEG Compression hardware;

iii- After first pass compression, the DSP retrieves the results (of first pass compression) from the Packet Count Register 3-21, and the image dimensions from the Top/Bottom and Width Detectors, then selects a new (second) QM and Huffman table to achieve the

proper compression results for a second compression, and loads this chosen QM and Huffman table into the LSI Chip Set;

iv - After second pass compression is complete, the DSP inserts all pertinent header information into the Compressed Image Packet in Output Buffer 3-25.

JPEG Processing/Compression Functions Implemented in Hardware:

In the previous section, the functions of the JPEG processing/compression path were introduced. In this section, the hardware-intensive functions are described in detail. The DSP functions, although critical to operation of the JPEG processing/compression path, are software based and not discussed in this section. The hardware functions next detailed are as follows, then detailed:

* Histogram
* Top/Bottom Detection
* Width Detection
* Status Capture
* Transpose and Block - Input Buffer

* Remap
* LSI JPEG Compression
* JPEG Post Processor
* Restart Marker FIFO
* Packet Count
* Output Buffer

The DSP, via software, executes the "grey level stretch and contrast reduction" algorithms by reading the 64 bin histogram of an image and generating a 128-entry remap table to be used by the Remap hardware. Also, the DSP chooses and loads the LSI chips set with the QMs and Huffman tables needed for first and second pass compression. Lastly, the DSP builds the necessary header data, (surrounding the compressed image data), and loads this header data into the Output Buffer 3-25.

Histogram:

The Histogram is generated in unit 3-7 as the image is being delivered from the N/S hardware and stored in the Input Buffer 3-1. The Histogram could have been generated without any custom hardware by having the DSP unit scan the contents of the Input Buffer after the image has been loaded. This, however, would greatly increase the time required for the JPEG processing/compression path to process the image because:

1 - Not only would it take relatively long (compared to custom hardware) for the DSP to subsample the contents of the Input Buffer, but

2 - this sampling could not be done until AFTER the image was stored in the Input Buffer.

Thus, by generating a Histogram with custom hardware WHILE the image is being input, the Histogram is available to the DSP as soon as the image has been input.

The only apparent drawback to so generating the Histogram during input of the image is that the Histogram is being generated BEFORE the Top and Bottom boundaries of

the check image have been determined (lead and trail edges of image are predetermined by N/S hardware). This means that pixels representing track background, above the top and below the bottom borders of the check image, are included in the Histogram. This will cause the "darkest" bins of the Histogram to be fuller than if the boundaries were known prior to generating a Histogram. This apparent drawback, in reality, is inconsequential, since the image processing algorithms, selected performed by the DSP according hereto, are not significantly affected by the quantity of pixels in the "darkest" bins.

The Histogram circuitry samples 50% of the pixels in the image by sampling pixels every 50ns (20 MHz input from N/S) from one of the two serial N/S inputs (Channels 0, 2, 4, and 6) and then from the other (Channels 1, 3, 5, and 7). The net effect is that the pixels sampled are arranged in a checkerboard pattern across the image. As a pixel is sampled, the "upper 6 bits" of the 7-bit pixel (LSB is ignored) are used to address a 64-bin Histogram RAM. The contents of the RAM at the addressed location are extracted, incremented by 1 and reloaded into the RAM. These iterations of reading, incrementing and writing must be done every 50ns. Although a 20 MHz synchronous clock is

used to begin every iteration, the reading, incrementing and writing are performed with asynchronous, pipelined logic using 2 CPLDs (Complex Programmable Logic Device) and 2 SRAMs (Static Random Access Memory).

Each of the 64 bins is 16-bits wide and can therefore record 64K occurrences of adjacent grey levels (e.g., 100 0101 and 100 0100 are sorted into bin 33). If, during the "Read-Increment-Write" iterations, any of the bins become full (reach a count of OxFFFF), this bin will NOT overflow with any additional pixels (reset to 0x0000) because the bin will peg at OxFFFF. This is essential for the image processing algorithms to get a good approximation of the grey level content and distribution in the image.

Transpose and Block Input Buffer:

The Input Buffer 3-1 is used to store the contents of the scaled, normalized image so that it can be transposed, grouped into 8x8 pixel blocks and sent to the compression hardware. Not only is it necessary to store the entire image for transposition purposes, but it is essential, to achieve predictable compression results, to perform "two-pass compression" on a fixed input image.

The Transpose and Block function (see 3-11) is used to generate the 20-bit address needed to access the 1Meg x 8 Input Buffer. It is this function that first stores the image data into the Input Buffer 3-1 as it is delivered from the N/S, and then removes the data in transposed, 8x8 blocks during each of the two compression passes.

To understand how this is done, it is important to know how the 1Meg x 8 Input Buffer 3-1 is spatially divided. This arrangement is shown in Figs. 5, 6. Since the Input Buffer is byte-wide, each byte will hold one 7-bit pixel (MSB is 0). The 1Meg x 8 buffer is first divided into eight, horizontal, 128K x 8 Channel Buffers representing the 8 channels of image data from the N/S (e.g., see Figs. 5, 6A). The 3 MSBs of the 20 address lines access one of the 8 channels.

Each 128K x 8 Channel Buffer is divided into an 186 x 11 array (Fig. 6B) of 64-pixel blocks. The reason for this arrangement will be explained later. Eleven of the 20 address bits are used to select the block within the Channel Buffer. Finally, each block is divided into an 8x8

array of pixels with the 6 LSBs of the 20 address bits used to select the pixel within a block (Fig. 6C).

The Channel Buffers are arranged in an array of blocks composed of 11 horizontal rows by 186 vertical columns. Because the maximum scaling resolution acceptable by the JPEG processing/compression hardware is 137.5 dpi (11/16ths scaling of 200 dpi captured image), the maximum number of pixels processed, per vertical scan in one channel, is 88. Since there are 8 rows of pixels per block, 11 blocks are needed to cover the vertical dimension (Fog. 6B). One vertical column of 11 blocks consumes 704 (11 x 64) memory locations. Since there are 131072 (128K) locations in each Channel Buffer, up to 186 (131072 / 704 = 186.18) columns of 11 blocks can fit inside the memory. At 137.5 dpi (11/16ths scaling), this translates into a horizontal measure of 10.8 inches ... more than enough to store the maximum check width of 9 inches. It is rare that some of the columns on the "far left" (see Fig. 5) of the Channel Buffer would ever be used, since the average check length would be between 6 and 7 inches. Likewise, if scale factors less than 137.5 dpi (11/16ths scaling) are used, the block rows near the top of the Channel Buffer will not be used. For example, at 100 dpi (8/16ths scaling), the top three rows of the Channel Buffer will not be used.

To access the Input Buffer, (3-1, Fig. 3), the hardware implements five counters listed below (and shown in Fig. 6D):

Channel Counter	3 bits	Accesses the 8 horizontal Channel Buffers that comprise the Input Buffer
Horizonal Block Counter	8 bits	Accesses the 11 rows of blocks in each Channel Buffer
Vertical Block Counter	4 bits	Accesses the 186 columns of blocks in each Channel Buffer
Column Counter	3 bits	Accesses the 8 columns of pixels in each 8x8 block
Row Counter	3 bits	Accesses the 8 horizontal rows of pixels in each 8x8 block

Because the Vertical Block Counter and Horizontal Block Counter are not fully utilized (11 of 16 and 186 of 256 respectively), their combined values are remapped, via a "PROM look up table", to form a Block pointer value consisting of 11 bits. In total, therefore, 20 bits are needed to access the entire Input Buffer 3-1 (Figs. 3, 6D).

By controlling the five counters described above (Fig. 6D) and changing their operating parameters (when they are incremented, when they are reset or preset and whether they count up or down), the hardware is able to store a vertically scanned image in the Input Buffer 3-1

and then unload, in 8x8 blocks, starting from either of the four corners of the image.

The following describes detailed control of the five counters during image capture and image compression.

Counter control during image capture:

During image capture, the N/S hardware delivers vertical scans of pixel data in two serial pixel streams as shown in Fig. 2 (and see further details in Figs. 1'-5', described below).

To store ONE vertical scan, the JPEG processing/compression hardware must store these pixel pairs at two separate locations in its 1Meg X 8 Input Buffer (Fig. 5) simultaneously. For this reason, the least significant bit of the Channel Counter is not used during image capture because pixels are received in pairs (from channel 0/1, 2/3, 4/5 and 6/7 respectively) and must be stored in two separate channels of the Input Buffer simultaneously. As valid pixel pairs are delivered from the N/S hardware, the Row Counter (Fig. 6D) is incremented. When the Row Counter rolls over (every 8 pixels), the Vertical Block Counter is incremented. When the Vertical

Block Counter reaches the scale factor (e.g., when the Vertical Block Counter reaches 11 for 11/16ths scaling), the Vertical Block Counter is reset and the Channel Counter is incremented by 2. When the Channel Counter rolls over from 6 to 0, the Column Counter is incremented. In this fashion one vertical scan is stored in the Input Buffer (3-1).

Every 8 scans, the Column Counter will roll over and the Horizontal Block Counter is incremented. Once the image is completely input, the Horizontal Block Counter will indicate the width of the scaled image in units of 8 pixel blocks.

Counter Control During Compression:

To understand the control of the counters during compression, use Fig. 5 for reference. In this figure, an image has been stored in the Input Buffer during image capture. The valid portion of the image lies between Horizontal Block (HBLK) #0 and HBLK #120 (as determined by the width count) and between channel 5, Vertical Block (VBLK) #1 and channel 0, VBLK #9. In this example, compression will begin at top left corner of the image and will proceed left to right, top to bottom. Compression

direction can begin in any of the 4 corners of the captured image and counter control will be slightly different for each compression orientation.

To start, the Channel Counter is preset to 5, the VBLK counter is preset to 1, the HBLK counter is preset to 120, the Column Counter is preset to 7 and the Row Counter is preset to 7 (upper left-hand corner of image). For JPEG compression, pixels must be raster scanned one pixel at a time, one block (64 pixels in 8X8 array) at a time. If the image is being compressed left to right, top to bottom (as it is in this example), all 64 pixels within the block must be read in the same direction before another block is read. Therefore, to read one 8X8 block, the Column Counter is continuously decremented (from 7 to 0) and every time the Column Counter rolls over (7 to 0) the Row Counter is decremented. Once the entire block has been read (64 pixels), the HBLK counter is decremented (moving left to right) and 64 pixels are read from the next block. After all 120 blocks are read in a row (HBLK counter reaches 0), the VBLK counter is decremented (moving top to bottom), and the HBLK counter is preset to the image width (left side or 120 in this example). Once the VBLK, HBLK, Column and Row counters reach 0 (bottom right corner of a channel), the

Channel Counter is decremented, the VBLK counter is preset with one less than the scale factor (top of the channel or 10 in the case of 11/16ths scaling), the HBLK counter is preset to the width (left or 120 in this example) and the Column and Row counters are preset to 7 (top right corner of a block). Counter control proceeds until the pixel at the bottom right corner of the image is read (in this example CH = 0, VBLK = 9, HBLK - 0, Column = 0, Row = 0); then compression terminates.

Top/Bottom Detection (e.g., see 3-3, Figs. 3,7):

The top and bottom borders of an image are detected as the image is being delivered from the N/S hardware and stored in the Input Buffer 3-1.

The borders could have been found without any custom hardware by having the DSP scan the contents of the Input Buffer after the image has been loaded. This, however, would greatly increase the time required for the JPEG processing/compression path to process the image (e.g., not only would it take relatively long for the DSP to sample the contents of the Input Buffer, but this sampling could not be done till AFTER the image was stored in the Input Buffer). By finding the borders with custom

hardware WHILE the image is being input, the borders are available to the DSP as soon as the image has been input--thus saving time.

The top and bottom borders detected by the hardware are relative to the scan direction of data received from the N/S hardware. In other words, scans are assumed to be "pixel-wide" vertical strips spanning all 8 channels starting at the bottom block of channel 0 and proceeding to the top block of channel 7. The bottom border of the image is the lowest occurrence of image data relative to the scan direction. This may actually be the top of the physical image, depending on which camera is capturing the image (front or back) and how the check was loaded in the track (e.g. upside down?)

The resolution of the border detection circuitry is in units of blocks, not pixels. Therefore, borders are reported according to the channel and block row within the channel. A typical example of bottom and top borders detected by the hardware are BOTTOM = channel 0, row 6; TOP = channel 6, row 3.

Borders are determined on a "scan-by-scan" basis. Initially, prior to receiving the first vertical scan of an image, the top border is set at the extreme BOTTOM (CH 0, block 0) and the bottom is set at the extreme top (CH 7, block A). As the first scan is delivered from the N/S, the JPEG compression path hardware compares each pixel to a given "border" threshold value. Pixels "whiter" than the threshold are considered part of the check image, while pixels "darker" than the threshold are considered track background. Every time 5 consecutive image pixels are seen, the hardware declares a "transition". The first transition seen in a scan is considered the "bottom" of that scan while the last transition in a scan is considered to be the "top". After each scan, the top and bottom borders of the latest scan are sent to a Top and Bottom Port. Only if the latest scan's top border is "higher" than the value presently existing in the Top port will the Top port be updated to the new value. Likewise, only if the latest scan's bottom border is "lower" than the value presently existing in the Bottom port will the Bottom port be updated. The net result is that, after the entire image has been input, the Top port will contain the channel and block number of the "highest" point of the image and the Bottom port will contain the channel and block number of the "lowest" point of the image.

The reason the hardware requires five (5) CONSECUTIVE image pixels before declaring a transition is to prevent the top/bottom circuitry from erroneously declaring a border based on dust or scrap (noise) in the track that might exceed the value of the selected threshold for a few consecutive pixels. Selection of five has been determined experimentally.

Although, this concept of border detection may seem straight-forward, it is complicated by the fact that the vertical scans are not delivered to the H/C by a single pixel stream sequentially from the bottom to the top of the scan. Rather, data is delivered simultaneously from two pixel streams representing data from odd/even channels (0, 2, 4 and 6 and channels 1, 3, 5 and 7), respectively. To find a border of a single scan based on two interleaved streams of pixels, the hardware implements two independent transition detectors TD-1, TD-2 (one for each N/S pixel stream; see Fig. 7; Fig. 7 illustrates top/bottom detection from two serial pixel streams). When transitions are detected, the hardware considers which of the two detectors found the transition, the value of the Channel Counter and the value of the Vertical Block Counter (see the Transpose and Block description) to see where, in the scan, the

transition took place. Based on this information, the appropriate Top or Bottom port can be updated.

Width Detection:

The top and bottom borders are detected by the JPEG processing/compression path hardware, but the right (leading) edge and left (trailing) edge are detected upstream by the N/S hardware. The N/S hardware, subsequently, only "qualifies" the data between the lead and trail edges when it delivers pixel data to the JPEG processing/compression (P/C) paths. The N/S hardware will only qualify data in groups of 8 vertical scans. In other words, the N/S hardware frames the image in the horizontal dimension on block boundaries. Therefore, the only action the JPEG processing/compression hardware need perform to detect the width of the image (in block units) is to count every eighth qualified scan from the N/S unit. By doing this, the JPEG processing/compression hardware is able to furnish the horizontal dimension of the image to the DSP as soon as the image is input from the N/S.

Status Capture:

When the N/S hardware sends image data to the JPEG P/C path, it appends a burst of image-related "status" information on the "back porch" of the image transfer. The

JPEG P/C path must take this information, supplement it with "status data" pertinent to the P/C hardware and attach it to the now Compressed Image Packet that is to be sent to the rest of the check imaging system via the JCDB (output of Fig. 3).

The JPEG P/C hardware accomplishes this function by buffering the "status data" as it is received from the N/S (buffered at 3-9 Fig. 3), and then making this data available to the DSP for inclusion in the final Compressed Image Packet.

Remap (See 3 13, Fig. 3):

The normalized and scaled image received from the N/S unit, and stored in Input Buffer 3-15 (Fig. 3), is processed prior to compression. As stated earlier, the image processing algorithms are executed by the DSP, based on the image dimensions and histogram generated by the hardware as the image was being input from the N/S. Once the algorithms are executed, the image could be updated by having the DSP update every pixel in the Input Buffer to its new image processed value. Such a method would take a relatively long time, since the DSP would have to fetch, update and write every pixel in the Input Buffer.

A much faster method is preferred: i.e., to remap pixels "on the fly" as they are sequentially sent to the compression hardware. To implement this method, the DSP generates a 128-entry "remap table" (one for every pixel grey level). During compression, every pixel (7 bits) pulled from the Input Buffer addresses the 128 entry table (implemented in high speed RAM at 3-13) and the output from the table is the remapped, image processed value (8 bits) for that pixel. This "remapped pixel" (value) is then sent to the compression hardware (i.e., to 3-17, and beyond).

LSI JPEG Compression (see 3-17, Figure 3):

The JPEG defined Discrete Cosine Transform (DCT), quantization and Huffman coding is implemented in a two-chip set from LSI LOGIC CORPORATION. This chip set requires that image pixels be delivered in 8x8 blocks. The retrieval of image data from Input Buffer 3-1 in the proper (8x8) sequence is effected by the Transpose and Block logic 3-11. The pixels are remapped (image processed) "on the fly" (at unit 3-13) before being sent to the LSI chip set (i.e. to block 3-17).

Because of the performance requirements of the high speed check imaging system, it is important to be able to compress the video image in Input Buffer 3-1 to a known packet size in a determinate amount of time. The image will be compressed once with the LSI chip set, using a standard QM and Huffman table provided by the DSP. Then, the result of this first compression, along with the image dimensions, will be used by the DSP to select a second QM and Huffman table which is then sent to the LSI chip set by the DSP. With this second QM and Huffman Table, this image (bit set) is then compressed a second time, then passed through Post Process unit 3-19 and stored in Output Buffer 3-25. This "dual compression" technique is a feature hereof, and will be understood to yield the desired compression packet size.

The design of the chip set by LSI LOGIC Corp. is such that the time required to compress an image can be determined by the amount of pixels to be compressed, as well as by the speed at which compression is executed. Even in the (statistically rare) case where JPEG compression results in EXPANSION, the LSI JPEG chip set will take no longer to execute. This feature is critical to performance in a high speed check imaging system like

the indicated DP1800. To further increase compression speed and reduce the time a JPEG compression path requires to process an image, the operating clock frequency of the JPEG compression path is preferably increased from 20 MHz to 25 MHz during compression.

Packet Count (see 3-21, Figure 3):

The JPEG P/C hardware need not save the results of "first pass compression". Therefore, many of the functions executed by Post Processor Unit 3-19 (e.g., byte stuffing, restart code insertion, writing to Output Buffer) are not done during "first pass compression". What is needed from first pass compression is merely an estimate of the result it yields. To provide this, the (32-bit) words output from the LSI LOGIC chip set 3-17 during compression are counted by the Packet Counter 3-21. The only inaccuracy in this count is that it does not include any "extra data" like stuffed bytes, restart codes or padded bytes that would be added to the compressed image by the Post Processor 3-19 (see Fig. 3). This extra data, however, is relatively insignificant, even for the most compressible images.

After "first pass compression", the DSP reads the Packet Counter and uses this "word-count" information to pick a Huffman Table and a QM for the "second compression."

JPEG Post Processor (See 3-19 and 3-17A Fig. 3):

The LSI JPEG chip set outputs 32-bit words of "entropy coded data" during compression. This data does not include the JPEG required "stuffed bytes" (a byte of 0x00 must follow every byte of 0xFF entropy coded data), or the JPEG required "restart codes" (two bytes of 0xFF and 0xDy after each horizontal row of blocks has been compressed) or the "padding bytes" (0xFF) required by the application to align restart codes on 32-bit boundaries.

The JPEG compression hardware must take the 32-bit output from the LSI chip set, insert the necessary data described above and funnel this information down into the 16-bit-wide Output Buffer 3-25. To accomplish this, the JPEG Post Processor 3-19, must take one byte at a time from the 32-bit LSI chip set output, check to see if the byte equals 0xFF, send this data to the Output Buffer --- and also send another byte of 0x00 if the previous byte was 0xFF. After compressing each horizontal row of blocks, the Post Processor will insert the two-byte restart marker and the number of padding bytes required to align restart

markers on 32-bit boundaries. JPEG standards require the restart marker to have a MOD 8 count component; and this is provided by the Post Processor hardware.

On average, it takes one clock cycle for the Post Processor to process each byte of data from the 32-bit (4 byte) LSI chip set ... two clock cycles if a 0x00 byte needs to be stuffed. While compressing "busy" portions of the image, it is possible (worst case) for the LSI chip set to output a 32-bit word 3 times for every four clocks. The Post Processor cannot keep pace with the LSI chip set during these "busy" portions of the image. To mitigate such "special circumstances", the JPEG compression hardware preferably also provides a 1K x 32 FIFO buffer 3-17A between the LSI chip set output and the Post Processor Logic (i.e., between 3-17 and 3-19). This buffer 3-17A allows the LSI output data to be buffered, and not lost, while the Post Processor catches up during "un-busy" portions of the image. Since the Post Processor only operates during "second pass compression" (when the DSP has already selected a target QM, and when compression is more predictable), the probability of "busy" portions of image occurring is greatly reduced. Therefore, any FIFO buffer, let alone a 1K FIFO, would rarely be used. In the statistically-rare case where the FIFO (3-17A) is being

heavily used, the input to the LSI chip set will be throttled by the JPEG compression hardware when the FIFO (3-17A) reaches "half-full" (512 words waiting for Post processing). Although this feature will rarely be used, it prevents data from being lost, even in the most extreme case. In fact, images would have to EXPAND by a factor of 4 before this feature would ever kick-in. The only side effect of executing this feature is a slight increase in compression time due to the occasional "throttling" of the input to the LSI chip set (in 3-17).

Restart Marker FIFO (3-23, Figure 3):

During "second pass compression", the JPEG P/C hardware generates and loads the compressed (entropy-coded) data into Output Buffer 3-25. After second pass compression is complete, the DSP builds the required header information around the entropy coded data packet. One of the required elements of the header is a table of offsets that will point to the END of each entropy coded segment in the Output Buffer. An entropy coded segment from the JPEG P/C hardware is comprised of the compressed data from one horizontal row of 8x8 blocks, ending with a restart marker. Providing this table allows the compressed image to be "gracefully" truncated by software on entropy coded segment boundaries.

The DSP gets this "offset" information from the Restart Marker FIFO 3-23. During second pass compression, the Post Processor 3-19 must insert restart markers into the Output Buffer at the end of each entropy coded segment. When the Post Processor loads a restart marker into the Output Buffer, the address into the Output Buffer at that particular instant is loaded into the Restart Marker FIFO.

Output Buffer (3-25, Figure 3):

The 64K x 16 Output Buffer 3-25 is the physical location where the Compressed Image Packet is built by the JPEG compression hardware (entropy coded data) and by the DSP (header information). During second pass compression the entropy coded data is loaded into the Output Buffer. After second pass compression is complete, the DSP builds the remaining header information around the entropy coded data. Once this is complete, the Image Packet is ready for transfer to the next stage (see JCDB, or "JPEG compressed Data Buffer, Fig. 3) of the high speed check imaging system; and then the JPEG compression path is free to accept another image into its Input Buffer 3-1.

This "dual buffering" (Input Buffer and Output Buffer) so implemented in my JPEG processing/compression path according to this feature, enhances performance by

allowing a second image to be received by a JPEG compression path before the first Compressed Image Packet is sent to the JCDB.

Scaler Invention (Figs. 1'-5'):

Unlike prior arrangements for scaling image data, the subject "Mapping Scaler" is not microprocessor-based and performs a "mapping" (e.g., rather than simply implementing a scaling algorithm; e.g., like the ASIC of US 5,305,398)--and so can do "asymmetric scaling", can store multiple algorithms while selecting one as needed (while, by contrast, 5,305,398 can run only one set scaling algorithm).

As a result, certain advantages accrue: e.g., this "Mapping Scaler" provides more flexibility in storing, selecting, and running new and different scaling algorithms; new scaling algorithms, not currently stored, can be easily loaded by simply changing the circuit ROMs with no hardware changes required; this scaler can implement asymmetric scaling; and it is not microprocessor based.

With this mapping function any scaling algorithm that can be defined as a two-dimensional adjacent pixel/adjacent scanline can be run; also asymmetric scaling

can be implemented. There is no reason why the scaling algorithm (or scaling scale) here needs to be identical for adjacent pixel (vs adjacent scanline) scaling.

Multiple algorithms can be stored and selected for use on an as-needed basis by a single instruction to the NS command register.

Scaler Theory:

Following is the preferred theory for operating scaling circuits on our "Mapping Normalizer/Scaler (NS) boards (e.g., see board in Fig. 5'); such are preferably used in the JPEG imaging module of a document imager/processor (e.g., of the type contemplated in US 5,305,398). Such a "Mapping Scaler" is shown in the block diagram of Fig. 1'.

General Discussion:

Here, one may assume that there are eight channels of image data that need scaling for each document side (front, rear). We contemplate two NS (Normalizer/Scaler) boards to scale the eight channels; thus, each NS board will scale 4 channels of image data. Each channel of data is scaled independently by one of four

image scaling circuits called "Scalers". (Fig. 5' depicts such an NS board in block diagram form; one such "Scaler" is depicted in Fig. 1'.)

Image channel data will be understood as a collection of scan lines. Each scan line (e.g., see Fig. 4') makes up 1/8 of the total track image (top to bottom). If you place scanlines next to one another you will get a strip of image that is 1/8 of a track high and that extends lengthwise (e.g., to infinity).

In Fig. 4', note where the full image is preferably divided into eight channels, with the scan-lines in each channel preferably comprised of 128 pixels, and each pixel represented by a 7-bit "word".

Each scan line is 128 pixels tall. Image data is fed into the scalers sequentially, starting with pixel 0 of the first scan line and ending with pixel 127. After pixel 127, the sequence begins again with pixel 0 of the next scan line, and so on.

The input data to the scalers therefore has a pattern like the following:

```
| ------- Scan line 1 ---------------------|--- Scan line 2 ---|
p0,p1,p2,p3,.....p123,p124,p125,p126,p127,p0,p1,p2,p3,....p127
```

Resolution for such input data may be assumed as 200 pixels/inch of document. As it turns out, this resolution is too high, so one needs a means of reducing resolution without degrading image quality.

Reducing pixel resolution is the job of the subject "Mapping Scaler" (Fig. 1') on the NS board.

<u>Scaler Operation</u>:

The subject mapping scaler circuit (Fig. 1') performs a two-dimensional mapping of adjacent pixel values (document height) and adjacent scanline values (document length) to "new values" and adds valid/invalid markers. This "mapping" can reduce the image resolution from 200 dpi (dots per inch) to some lesser value. The scaler circuits preferably accomplish the mapping using "ROM Look-Up tables" (Scaler ROMs so coupled), that are arranged preferably in a pipeline architecture.

The ROM-based design means that all scaling calculations are performed ahead of time by the algorithm designer. Then the algorithm results are programmed into

the scaler circuit ROMs (see R-1,R-2, R-3 in Fig. 2'; R-4, -4', -5 in Fig. 3'). The scaler circuits do not execute algorithmic calculations. The "new values" and valid/invalid markers come from the scaling algorithm results that are stored in the scaler ROMs. The scaler circuits "map" input values into the output algorithm results.

Since only the results of the scaling algorithm are needed, any adjacent pixel/adjacent scanline scaling algorithm that can be designed can be implemented in this design.

The scaling design according to this implemented feature can store eight (8) different scaling algorithms. Each algorithm is easily selected from the NS board's Command Register CR via a "scale factor" input (e.g., see Control Register CR in Fig. 5'). Of course, using larger ROMs would allow for more stored algorithms.

Here, pipelined architecture means that, once the pipeline is full, the entire two-dimensional scaling function occurs in one clock cycle (tic). Therefore, scaling can occur in "real time" (at a desired 8 MHz rate).

Actual Scaling (Mapping):

The scaler circuits implement the scaling mapping in a pipeline fashion. The first Scaler stage S-I (Figs. 1',2') implements "adjacent pixel mapping" (document height).

As one can see from Fig. 2', a "current" (7-bit) pixel value goes (from INPUT to R-1) to the pixel ROM address. The "previous" pixel value goes to the previous pixel ROM address R-2. In addition, each ROM address gets a pixel count number p-c and associated scale factor. The pixel count number p-c keeps track of which pixel one is working on. Pixel count is reset at the end of every scan by an "end of scan" (e-os) signal. A "scale factor" input selects which of the eight 8 possible scaling algorithm results is active.

Therefore, the ROM address contains the pixel value, pixel number, and scaling algorithm index. These three input values point (map) to a unique output data value and a valid "marker", depending upon the scaling algorithm (used to separate the result file). The data output from each ROM is then fed to the address of an Adder

ROM (R-3) that performs the addition-mapping. (Or whatever other mapping that may be programmed into it.)

In general, "stage one" (S-I, Figs. 1',2') of this scaler does the following. Say we have an input data stream as follows:

```
        ¦ ------- Scan line 1 --------------   ¦-- Scan line 2 ----¦
p127,p0,p1,p2,p3,.....p124,p125,p126,p127,p0,p1,p2,p3,....p127
```

p127 and p0 are mapped to ---p0' and declared "valid" or "invalid"
p0 and p1 are mapped to ---p1' and declared "valid" or "invalid"

p126 and p127 are mapped to --p127' and declared valid or invalid.

Then the entire sequence begins again.

The output data from stage one may now look like the following (possible 100 dpi scaling; notice the new values and valid/invalid markers "v,i"):

```
        ¦------- Scan line 1 ---------- ¦--- Scan line 2 --¦
p127',p0',p1',p2',p3',.....p126',p127',p0',p1',p2',p3',....p127'
v     i   v   i   v        i     v     i   v   i   v       v
```

Where p' is the new mapped pixel value and ("i/v") denotes a valid or invalid marker.

The next stage S-II (Stage Two, Figs. 1',3') of the scaler circuit maps pixel values from adjacent scan lines (document length; Note: Fig. 3' shows "dual port memory" and "adjacent scanline scaler").

To get at adjacent scan lines we need a place to store one complete scan line (so the previous scan line can be recovered on a pixel-by-pixel basis and mapped with pixels from the "current" scan line). For this storage function a dual-port RAM is preferred (e.g., see R-dp). For the dual-port RAM address, we use the pixel count. Now we can store the "current" scan line pixel, while recalling the previous scan line pixel in a single operation.

As one can see from Fig. 3', the "current" scan line pixel value is stored in a "Scan Line ROM" R-4, along with scale factor and scan line count. The previous scan line pixel value is stored in a "Previous Scan Line ROM" R-4', along with scale factor and scan line count.

Each ROM now has enough information (in the address) to "map" to a "new value" and a valid/invalid marker. The two "new values" are then fed to an Adder ROM R-5 for the addition function.

Therefore, if the output of the first stage (S-I) has the data pattern:

```
        | -------- Scan line 1 ---------|---- Scan line 2 --|
p127',p0',p1',p2',p3',.....p126',p127',p0',p1',p2',p3',.....p127'
v     i   v   i   v         i     v     i   v   i   v         v
```

Then:

p0' Scan1 and p0' Scan 2 are mapped to p0'' and marked valid or not.
p1' Scan1 and p1' Scan 2 are mapped to p1'' and marked valid or not.
.
.
p127' SC1 and p127' SC2 are mapped to p127'' and marked valid or not.

The data now looks like this at the R-5 output (possible 100 dpi scaling).

```
|------- Scan line 1&2 ------------|-- Scan line 2&3--|
p0'',p1'',p2'',p3'',.....p126'',p127'',p0'',p1'',p3''....p127''
i    i    i    i         i      i      v    i    v       i
```

The job is now complete. The output of the scaling circuits (S-OUT, Fig. 1') is a two-dimensional, scaled-down version of the input (S-IN). The scaled values and "valid" labels are dependent upon the scaling algorithm results stored in the scaler-ROMs. Pixels marked with "i" are invalid and are filtered-out of the data stream.

Scaler Features:

Multiple-scaling selections:

The described Scaler circuits preferably use a 4-bit pixel and 4-bit scanline counter (e.g., see counter PC in Figs. 1', 2'). Counter PC keeps track of pixel and scanline location within a 16-position window. Therefore, the scalers can implement any scaling algorithm that scales down the image by a multiple of 16. Possible scaling selections are 1/16, 2/16, 3/16, 4/16, 5/16, 6/16, 7/16, 8/16, 9/16, 10/16, 11/16, 12/16, 13/16, 14/16, 15/16, 16/16.

Of course, making the pixel and scanline counters larger would give more selections, 5 bits would give multiples of 32, 6 bits would give multiples of 64, etc.

Multiple -scaling algorithms:

The Scaler circuits preferably use a 3-bit "scale factor selection" code. This code allows 8 different scaling algorithms to be stored in the scaler ROMS simultaneously. Which scaling algorithm is run is determined by the 3-bit scale factor selection code. This code is accessed via the command register of the NS board. This selection code can activate different scaling factors such as 4/16 or 8/16; or it can activate different scaling algorithms such as 8/16 2X2 averaging or 8/16 bilinear

interpolation, or whatever algorithm the designer wants to run; it is up to the algorithm designer and what he has programmed into the "Scaler ROMS" (e.g., see R-1,-2,-3,-4,-4',-5 in Figs 1', 2').

Asymmetric scaling:

Because adjacent pixel scaling (height) is handled independently of adjacent scanline scaling (length), it is possible to implement "asymmetric scaling". There is no reason why adjacent pixel scaling has to use the same scaling factor or scaling algorithm as adjacent scanline scaling. Example: adjacent pixel scaling (document height) might be 7/16 and adjacent scanline scaling (document length) might be 9/16. This particular example would have the visual effect of stretching the document length-wise. One can see how this option gives the algorithm designer extra flexibility in deciding how to scale documents.

Variations:

Workers will see that certain features hereof may be modified. For instance, note that it is possible to replace the mentioned three "S-I ROMs" (see Fig. 2':

"Current pixel ROM" R-1, "previous pixel" ROM R-2, and "Adder ROM" R-3) with one large ROM.

Also, the three "S-II ROMs ("scanline" ROM R-3, "previous scanline" ROM R-4 and "adder" ROM R-5) can also be replaced with one large ROM.

Preferred implementation of the scalers allows for storage of eight separate scaling algorithm-mappings. This of course is limited only by the size of ROM selected. The design could use larger ROMs and so accommodate more scaling algorithm-mappings.

Results, Advantages:

Workers will appreciate that such a "mapping scaler" arrangement has several advantages (e.g., over the ASIC Scaler of US 5,305,398, with its microprocessor-based single fixed scaling algorithm): e.g., the "Mapping Scaler" can provide more flexibility in storing, selecting, and running, new and different scaling algoriths; scaling algorithms, not currently stored, can be easily loaded by simply changing the circuit ROMs, with no hardware change required; it can implement asymmetric scaling.

Since these scaler circuits perform a mapping function rather than just implementing a scaling algorithm, any scaling algorithm that can be defined as a two-dimensional "adjacent pixel/adjacent scanline mapping" can be run; and asymmetric scaling can be implemented. [There is no reason why the scaling algorithm or scaling scale needs to be identical for adjacent pixel vs adjacent scanline scaling.]

Also, multiple algorithms (the instant NS scalers store 8) are stored and can be selected for use on an as-needed basis by a single instruction to the NS command register. (vs US 5,305,398 which could run only one scaling algorithm.)

And multiple scaling mappings can be stored in the mapping ROMs, with these mappings selected by changing the ROM addressing via the scale factor input. (This current NS implementation stores 8 different scaling mappings.) The number of mappings stored is, of course, dependent on the size of the ROMs chosen. Larger ROMs would give space for more mappings.

Further, such scaler circuits can make use of dual port RAM for storage of a complete scanline for use in the adjacent scanline scaling. And since the scaler marks pixels as "valid" or "invalid", pixels marked invalid may be filtered-out of the data stream.

--- Synchronizing Tags:

Conventional Solution ("OLD WAY") for Synchronization:

In a more conventional solution for this problem, all transactions between processing stations would be performed on a first in, first out (FIFO) basis; while assuming, for instance, that four different associated data queues (front image, rear image, collateral document data, and image "status") will remain in synchronization. The only validation of genuine synchronization would be via the physical dimensions of an image (e.g., as embedded in the image data, along with "image status"). However, when processing documents of a single uniform size, this isn't worth much.

New Solution (Preferred Embodiment):

We prefer, according to a feature hereof, to use a "sync tag identifier" (i.e., identifying bits that help synchronize) which is assigned to a document and is used to

track that document through the Imaging Module. This "Tag" is preferably used by each software and hardware entity that performs functions on a per-document basis. [No "synchronization" or other time-based check should be inferred.]

For instance, consider Document Processor DP schematically indicated in Fig. 1B and including an image interface unit (board) IIB and associated processing software DP-S, fed by an Imaging Module IM, including a pair of Front-/Back image processing units A-1, A-5 to develop respective electronic, digital document image data, as aided by a Diagnostic/Transport Interface DTI. This electronic image data is passed to a Main Processor A-7, and may be stored in a Storage-Retrieval unit SRM, being linked to processor A-7 via a Point-to-Point Optical Link unit A-9, as known in the art.

In this system, it will be understood that an Electronic Camera and an Image Digitizer operate to process video scan lines, but that they perform no operations on a per-document basis, and therefore do not use "sync tags". Here, the "sync tags" are preferably arranged to originate

with the Document Processor Software (e.g., see Fig. 1B, element DP-S) as workers will appreciate.

Sync-Tags, In General:

Figure 2A illustrates a "flow" of "sync tag" information through the image processing electronics of a document processor (e.g., like that of Fig. 1B, Imaging Module thereof) to a Storage and Retrieval Module, SRM. The "sync tags" preferably originate within the document processor software, and are returned to the document processor software, providing an end-to end check of the integrity of image generation.

The "sync tag" for a document is preferably assigned by software executing in the document processor. That software produces information indicating the operations that the document processor/imaging module are to perform on the document as it travels to its assigned sort-pocket; this is the "Dispose Command". Part of this Dispose Command is the sync tag and image information. The Dispose Command is transferred by the Image Interface IIB (Fig. 1B) to the Imaging Module IM.

Salient units of image processing electronics are indicated in Fig. 2A, including image digitizer 1D, front CAR Port C_F (accepts Courtesy-Amount-Reader data, as known in the art), with a Buffer JCDB (JPEG Data Buffer, also see Figs. 1C and 2) fed by a Histogram/Compressor Stage H/C that is, in tern, by a pair of Normalizer/Scalers (Master N/S, M-S and Slave N/S, S-S). Sync-tag data is fed to Scaler M-S (e.g., from Document Process Software, so DP-S, Fig. 1B).

A preferred Normalizer/Scaler organization (re sync-tag) is indicated in Fig. 9 as a Sync-Tag FIFO register 5-1 coupled between an interface 5-5 to the H/C stage and an input (DT1) interface 5-3, with a "Last Sync-Tag register" 5-7 in parallel therewith. Fault registers 5-8 and Status registers 5-9 are also so coupled.

A preferred organization of JPEG Compressed Data Buffer JCDB (e.g., see Figs. 1C, 2A, 3 and 9) is indicated in Fig. 10 as a pair of Primary-, Redundant Memory buffers 6-3,6-2 coupled between H/C interface 5-5 (see Fig. 9) and Interface 6-4 to the Main Processor, with a Cross-Compare Stage 6-8 in parallel to Interface 6-4. A Sync-Tag Queue

Unit 6-6 and associated DT (Diagnostic Transport) Interface 6-7 (see Fig. 1B) also input by H/C Interface 5-5.

Diagnostic and Transport Interface Use of Sync Tag:

According to this embodiment, when a Diagnostic and Transport Interface (DTI) receives such "disposition information" (e.g., Fig. 1B, as above) from the document processor, it extracts the sync tag information and passes the sync tag value to Sync Tag FIFOs in the Normalizer/Scaler (N/S) units (e.g., see Fig. 9) for the front and back image processing electronics. Then, this disposition information is passed to the Main Processor (A-7, Fig. 1B).

When the DTI receives an "interrupt" from the Normalizer/Scaler units, it begins a timeout for the item to complete compression. The DTI then reads the "Last Sync Tag Register" from both Normalizer/Scalers (e.g., see Fig. 9), and verifies that the sync tag that was read matches the sync-tag in the "Dispose Command". If either sync tag is "incorrect" (i.e., does not "match"), then the DTI requests the Main Processor to "Stop Flow".

When the DTI receives an interrupt from a JPEG Compressed Data Buffer (JCDB, Fig. 2A: described above), it reads the Sync Tag Queue for the interrupting JCDB. If the sync tag has the expected value, then the "timeout" for the item to complete compression is disabled. If the sync tag does not have the expected value, the DTI requests the Main Processor to "Stop Flow". If this is the second JCDB interrupt for this item (that is, if the interrupt from the JCDB from the other side for this item has been processed or has timed-out), then the "status" for this item is sent to the Main Processor A-7.

Sync Tag Usage in Main Processor:

The Main Processor (A-7) compares the master N/S sync tag and the slave N/S sync tag in the JCDB memory buffer for the interrupting JCDB. If the sync tags do not match, then Processor A-7 uses the sync tags from the redundant JCDB memory buffer (see 6-2, Fig. 10) to determine if the fault lies in the JCDB memory buffer, or in the input data from the Histogram/Compressor (H/C bus, 6-5, Figs. 9,10). The "status" from the H/C within the JCDB memory buffer indicates if the H/C detected a mismatch in the sync tags as they were received from the N/S boards.

Main Processor A-7 compares the master N/S sync tags from the front and back JCDB buffers with the sync tag in the next queued "disposition information" and the sync tag in the "status" bits from the DTI, to verify that the sync tags from all four sources match. The main processor also transmits the "sync-tag" to the Document Processor Software (DPS, Fig. 1B) when processing is complete.

Sync tag Flow in Imaging Processing Electronics:

Figure 2A illustrates sync tag "flow" through image processing electronics (for handling the image of one side (assume Front side) of a document. Note: The front

and back sides of the document are processed by like, separate sets of electronics. The "intermediate" and "final" sync tags produced are examined by the programs executing in the Imaging Module, to verify that the sync tags remain in sequence for a particular side, and that they match between the two sides.

Assume each Normalizer/Scaler (Master and Slave) completes its processing of a document (image data) --- then if the Sync Tag FIFO is not empty (e.g., see Fig. 9), the system assigns the sync tag value at the "head" of the Sync Tag FIFO for the document. But, if the Sync Tag FIFO is empty, the Normalizer/Scaler assigns a sync tag value equal to the value in the "Last Sync Tag Register" for the document, and sets a Sync Tag FIFO "underrun bit" in one of its "fault registers" (e.g., see Fig. 9), internal to each Normalizer/Scaler.

In either case, the Normalizer/Scaler then stores the sync tag value in the "Last Sync Tag Register" (e.g., Fig. 9), and then assembles and transfers the sync tag and status data for the document to the Histogram/Compressor and interrupts the DTI, and removes the entry at the head of the Sync Tag FIFO.

The transfer of "status" data (conventionally developed as workers realize) from the Normalizer/Scaler to the Histogram/Compressor array H/C follows the final scan line of an image, using the same bus as the image data (e.g., illustrated exemplarily in Fig. 8). Following the transfer of the last pixel of an image, from the Normalizer/Scaler boards to the Histogram/Compressors, a "document present" signal (PDOCPRES_N) will usually remain in an inactive state, with the "valid video" signal (PVALID_N) inactive until the status and sync tag bits associated with the image data are ready for transfer to the Histogram/Compressor boards. Coincident with this PDOCPRES_N signal going inactive, the least significant byte of the sync tag from each Normalizer/Scaler board is transferred over a "processed video" (PVIDEO) bus (e.g., see Fig. 2A).

At the next clock, the most significant byte of the sync tag from each Normalizer/Scaler board is transferred over the PVIDEO bus. During each of the next (30) clock cycles, one byte value may be transferred over the PVIDEO bus to the Histogram/Compressors by each Normalizer/Scaler. Multiple-byte information is transferred, least significant byte first.

The Histogram/Compressor includes the sync tags and "status" bits received from the Normalizer/Scaler boards in its "compressed image buffer" (see Output Buffer, Fig. 3)--these bits are transferred to the JPEG Compressed Data Buffer. (e.g., see Fig. 2A). The Histogram/Compressor compares the sync tag bits received from the Master Normalizer/Scaler board with those received from the Slave Normalizer/Scaler board, and a "fault" is declared if they are "unequal". This fault data is also included in the image data that is transferred from the compressed image buffer to the JPEG Compressed Data Buffer.

The JPEG Compressed Data Buffer (Fig. 2A) extracts the sync tags from the Master N/S as data is received from one of the Histogram/Compressors. This sync tag is placed in a queue which can be read by the DTI. (When an entry is "read", it is removed from the queue.) An "interrupt" in presented to the DTI whenever this queue is not "empty".

<u>"New Way" Reprised</u>:

The "new way" here-described provides for a positive identification of electronic document image data at every processing station in an imaging module that

performs operations "on a per-document basis" (e.g., see DPS and Main Processor in Fig. 1B), from the time the image data is first delineated until its data packet is sent for storage to the database.

In the "old way", all transactions between processing entities would be performed on a first in, first out (FIFO) basis, in general, while assuming that the four different associated data queues (front image, the rear image, "collateral document information", and image status) remained in synchronization. But this isn't a reliable assumption, since synchronization could be verified only via physical document dimensions (e.g., as embedded in the image data), and by "image status"; however, when processing documents of uniform size, this is worth little.

But using "sync tags" as here taught can be quite advantageous; e.g., when made available to the DTI at the Normalizer/Scaler and JCDB boards to verify the integrity of the DTI's image processing electronics and its internally maintained queues, since each entry in a queue also contains the sync tag --- remembering that the sync-tags facilitate rapid, reliable detection of a malfunction which throws the Front/Rear image-bits out of sync.

Also, sync tags may be used during debugging to easily identify the various pieces of image data and other, collateral, data associated with a particular document image. Having the sync tag embedded into image data (e.g., like "status") allows this fundamental information to be easily correlated, whereas the "old" way gives no such convenient identifier/synchronizer.

While the invention has been described in connection with the presently preferred embodiment, the principles, of the invention are capable of modification and change without departing from the spirit of the invention as set forth in the appended claims.

What is claimed is:

1. A method of electronic document-imaging wherein imaging means generates imaging-bits representing a given document and transfers these bits on a "per-document basis" to various successive electronic processing stages and, finally, to a data base storage means (SRM); this method including providing tag means adapted to create tag bits unique for each such imaged document and transferring these tag bits with the imaging bits for each document to each such processing stage that handles the imaging bits on a per document basis, and finally transferring said tag bits to SRM interface means for final matching and removal of the tag bits.

2. The invention of claim 1, wherein said tag bits are checked at some or all of said processing stages.

3. The invention of claim 2, wherein said tag bits are embedded with the imaging bits for each document.

4. The invention of claim 3, wherein two or more imaging means are involved, each generating a respective set of imaging bits, with a common array of tag bits for each said document, these sets of imaging bits thereafter being presented to interface means including compare means to assure that the tag bits for such imaging bits of a given document are the same.

5. The invention of claim 4, wherein said imaging means constitute Front and Rear camera means generating respective Front and Rear sets of imaging bits, and merging each set with common set of tag bits uniquely identifying the common document.

6. The invention of claim 5, including transferring said Front and Rear sets of imaging bits/tag bits to common processor stages via a single transfer stage DT, along with "collateral bits" such as "status bits"; and also arranging this transfer stage DT to read, and check each pair of tag bits before transferring the image bits/tag bits onward; whereby a "FAULT" signal may be generated when they do not match.

7. The invention of claim 6, including storing all said pairs of bits in Queue means in such transfer stage, and arranging said transfer stage to automatically issue INTERRUPT wherever its said Queue means is "Not Empty".

8. The invention of claim 7, including adapting associated program means to generate said tag bits and to monitor the match thereof before allowing a "valid" final transfer to said storage means.

9. The invention of claim 8, wherein such "collateral bits" are arranged to include "status bits" that are also transferred with their associated image bits.

10. The invention of claim 1, wherein said pre-document processing stages is arranged to include a Histogram/Compressor stage H/C fed by Normalizing/Sealing means N/S, and wherein said tag bits are transferred to said N/S means and <u>thence</u> to said H/C means.

11. The invention of claim 9, wherein said tag-bits are so transferred along with respective status bits, after the final scan of a document, using the same bus as for said imaging bits.

12. The invention of claim 10, wherein said N/S means is arranged to include "Last set register" means for storage of respective tag bits and later transfer to said H/C means.

13. The invention of claim 11, wherein said image bits are arranged to comprise JPEG data bits and are input from said H/C means to JPEG Data Buffer means in route to said final storage means.

14. The invention of claim 12, wherein said N/S means is arranged to include Tag Register means input from DT interface means and output to H/C interface means.

15. The invention of claim 13, wherein said N/S means is also arranged to include "Last tag" register means input by said Tag Register means and output to said DT interface means.

16. The invention of claim 14, wherein said N/S means is also arranged to include Fault register means and Status register means.

17. The invention of claim 15, wherein said DT interface means is arranged to include Queue means adapted to automatically be interrupted when "Not empty" and to periodically remove the data at the head of said Tag Register means.

18. The invention of claim 16, including coupling said H/C means to "Compressed Image Data buffer means which, in turn, is coupled to input said JPEG Buffer means.

19. The invention of claim 17, wherein both said buffer means are adapted to also store "status bits" with each imaging/tag bit set.

20. The invention of claim 13, wherein said N/S means comprises Master N/S means and Slave N/S means, each coupled to receive associated imaging/tag bits in parallel, and both are coupled to common compare means adapted to issue a "FAULT" signal if the tag bits therein do not match for a given set of imaging bits.

21. The invention of claim 19, wherein said "Collateral bits" include "Status bits" transferred with said imaging bits.

22. A method of electronic document-imaging comprising using imaging means to generate imaging-bits representing a given document, transferring these bits on a "per-document basis" to various successive electronic processing stages and, finally, to a data base storage means (SRM); also arranging document-tag means adapted to create tag bits unique for each such imaged document; transferring these tag bits with the imaging bits for each document to each such processing stage that handles the imaging bits in a per document basis, and finally transferring them to SRM interface means for final matching and removal of the tag bits.

23. The invention of claim, 22 as adapted to JPEG Processing wherein said tag bits are checked at some or all of said processing stages.

24. The invention of claim 23, wherein said tag bits are embedded with the imaging bits for each document.

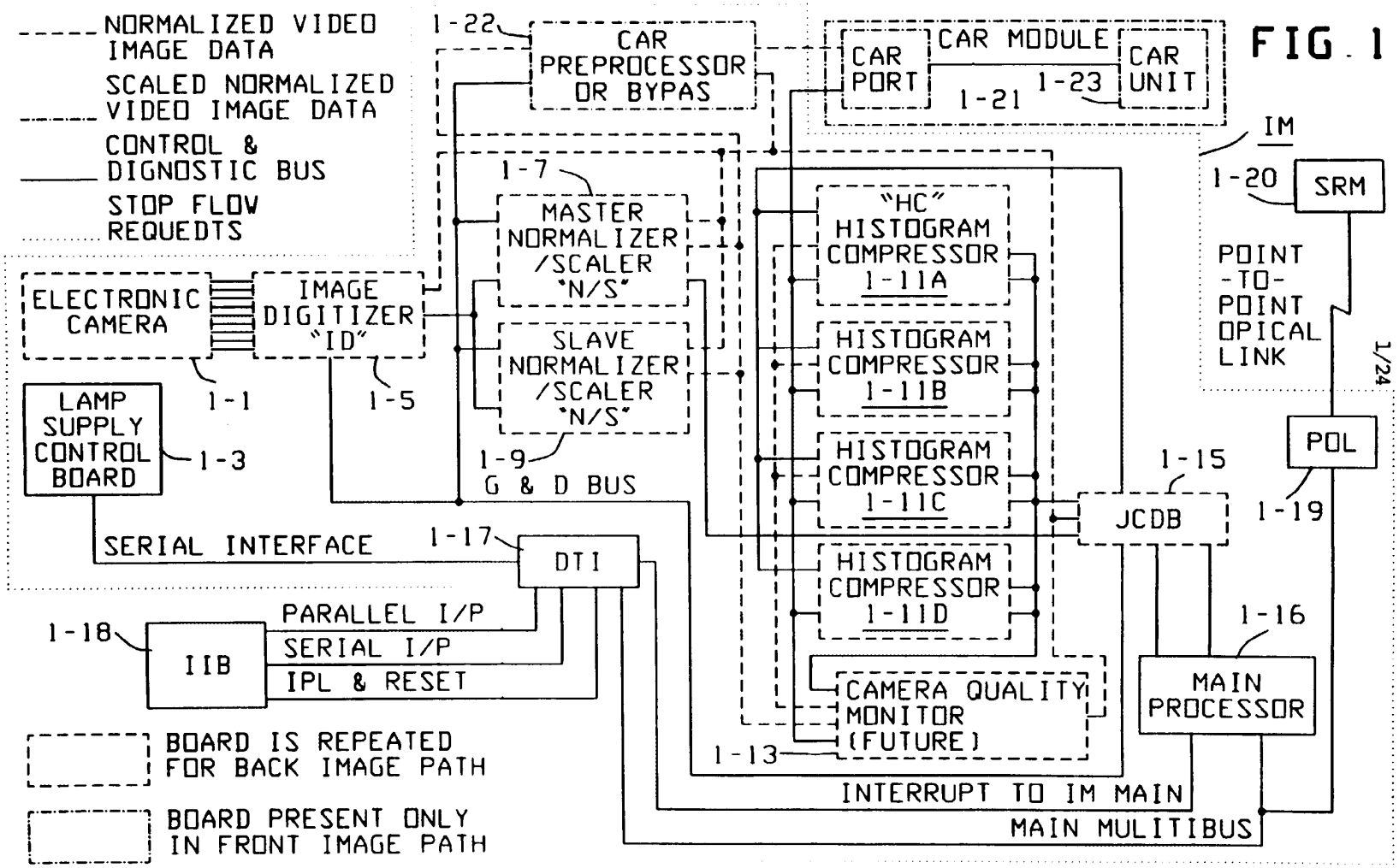
NORMALIZED VIDEO IMAGE DATA
SCALED NORMALIZED VIDEO IMAGE DATA
CONTROL & DIGNOSTIC BUS
STOP FLOW REQUEDTS
1-22
CAR PREPROCESSOR OR BYPAS
CAR PORT
CAR MODULE
CAR UNIT
1-21
1-23
IM
1-20
SRM
POINT -TO- POINT OPICAL LINK
1/24
POL
1-19
1-7
MASTER NORMALIZER /SCALER "N/S"
SLAVE NORMALIZER /SCALER "N/S"
1-9
G & D BUS
ELECTRONIC CAMERA
IMAGE DIGITIZER "ID"
1-1
1-5
LAMP SUPPLY CONTROL BOARD
1-3
SERIAL INTERFACE
1-17
DTI
"HC" HISTOGRAM COMPRESSOR 1-11A
HISTOGRAM COMPRESSOR 1-11B
HISTOGRAM COMPRESSOR 1-11C
HISTOGRAM COMPRESSOR 1-11D
1-15
JCDB
1-16
MAIN PROCESSOR
CAMERA QUALITY MONITOR (FUTURE)
1-13
1-18
IIB
PARALLEL I/P
SERIAL I/P
IPL & RESET
INTERRUPT TO IM MAIN
MAIN MULITIBUS
BOARD IS REPEATED FOR BACK IMAGE PATH
BOARD PRESENT ONLY IN FRONT IMAGE PATH

FIG. 1

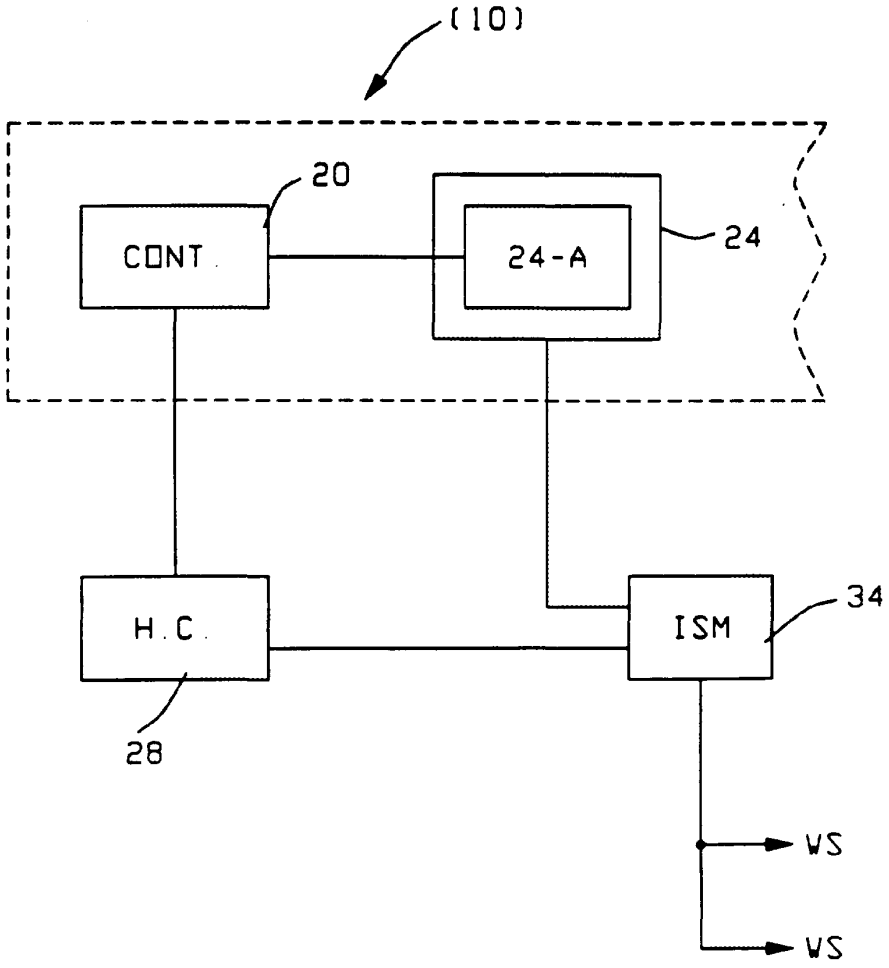

FIG. 1A

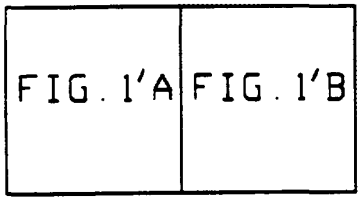

FIG. 1'

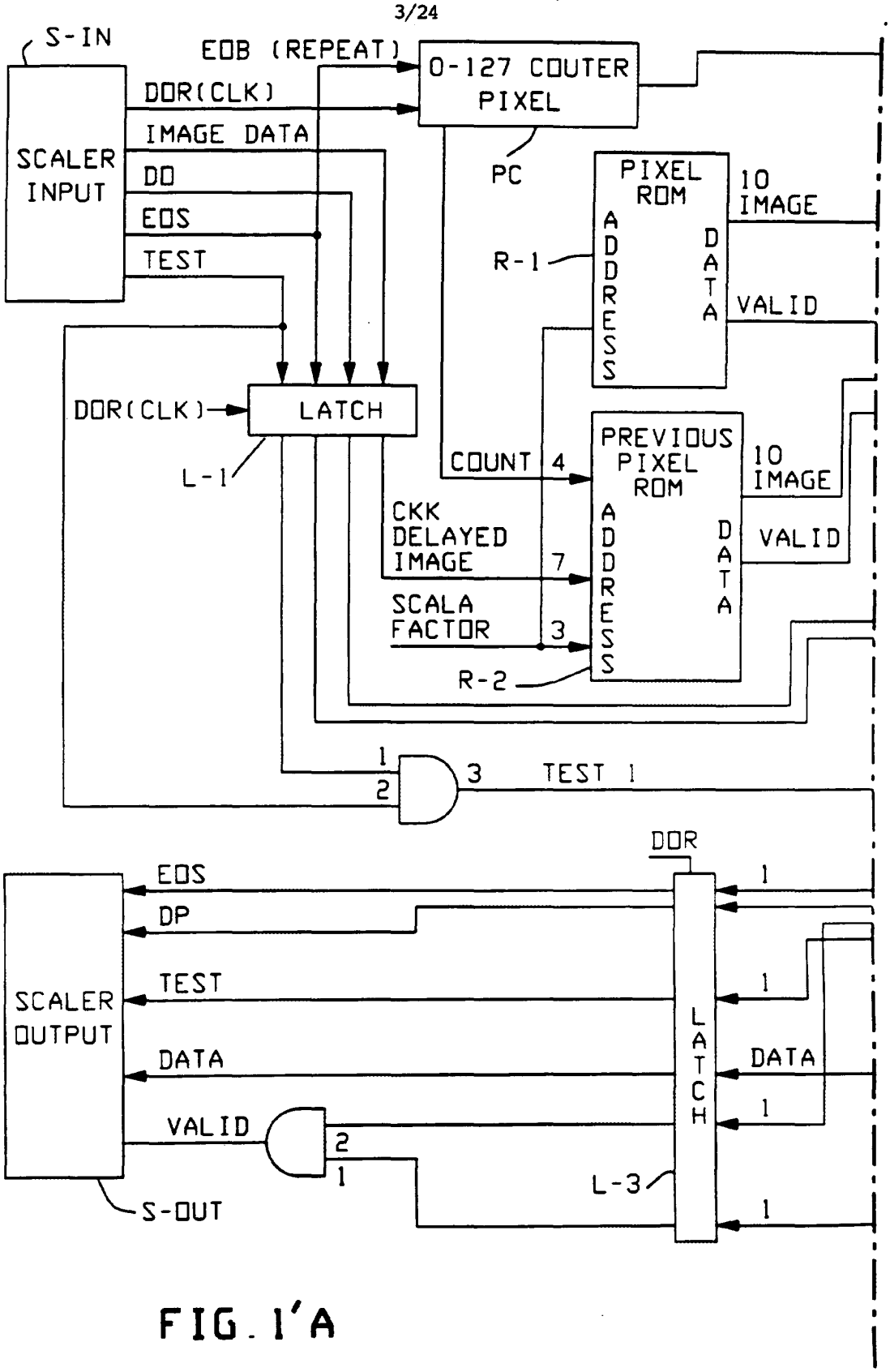
S-IN
SCALER INPUT
EOB (REPEAT)
DOR(CLK)
IMAGE DATA
DO
EOS
TEST
0-127 COUTER PIXEL
PC
PIXEL ROM
ADDRESS
DATA
R-1
10 IMAGE
VALID
DOR(CLK)
LATCH
L-1
COUNT
4
PREVIOUS PIXEL ROM
ADDRESS
DATA
10 IMAGE
VALID
CKK DELAYED IMAGE
7
SCALA FACTOR
3
R-2
1
2
3
TEST 1
DOR
EOS
DP
TEST
DATA
VALID
SCALER OUTPUT
S-OUT
LATCH
L-3
DATA
1
1
1
1
2
1

FIG. 1'A

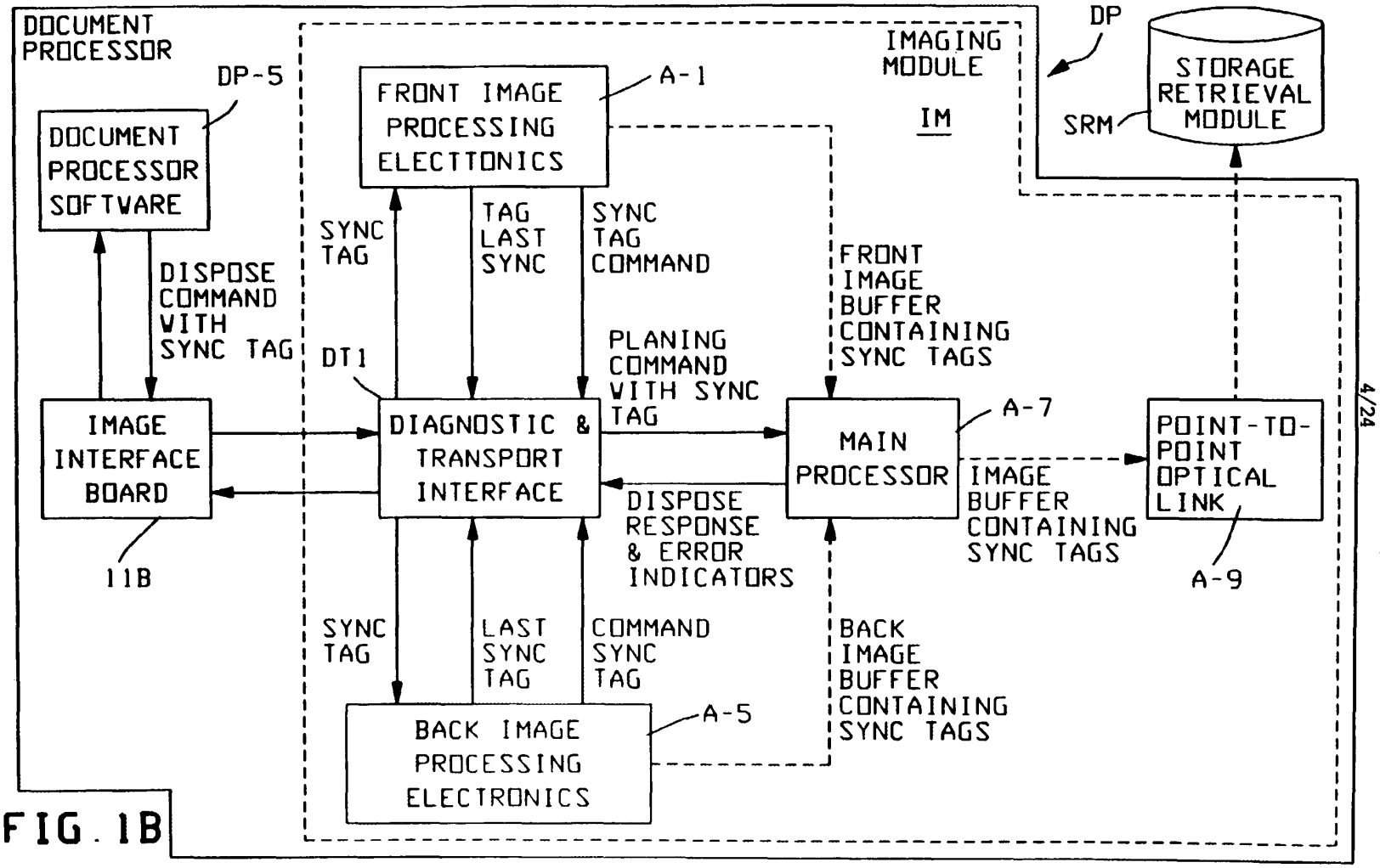
DOCUMENT PROCESSOR
DP-5
DOCUMENT PROCESSOR SOFTWARE
DISPOSE COMMAND WITH SYNC TAG
IMAGE INTERFACE BOARD
11B
IMAGING MODULE
IM
FRONT IMAGE PROCESSING ELECTTONICS
A-1
SYNC TAG
TAG LAST SYNC
SYNC TAG COMMAND
DT1
DIAGNOSTIC & TRANSPORT INTERFACE
PLANING COMMAND WITH SYNC TAG
DISPOSE RESPONSE & ERROR INDICATORS
SYNC TAG
LAST SYNC TAG
COMMAND SYNC TAG
BACK IMAGE PROCESSING ELECTRONICS
A-5
FRONT IMAGE BUFFER CONTAINING SYNC TAGS
MAIN PROCESSOR
A-7
IMAGE BUFFER CONTAINING SYNC TAGS
BACK IMAGE BUFFER CONTAINING SYNC TAGS
DP
SRM
STORAGE RETRIEVAL MODULE
POINT-TO-POINT OPTICAL LINK
A-9

FIG. 1B

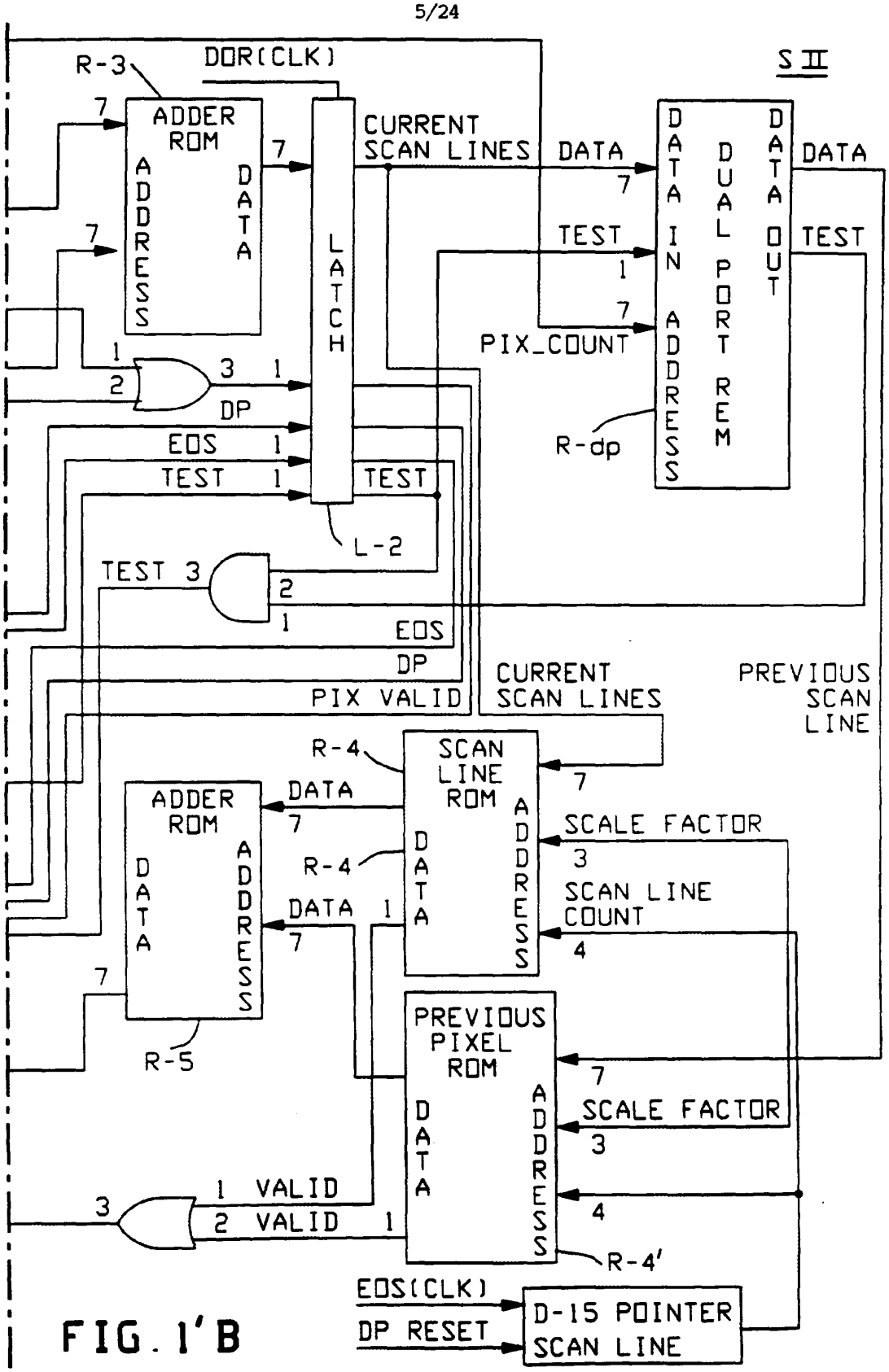
R-3
DOR(CLK)
S II
ADDER ROM
ADDRESS
DATA
LATCH
CURRENT SCAN LINES
DATA
TEST
PIX_COUNT
DATA IN ADDRESS
DUAL PORT REM
DATA OUT
DATA
TEST
DP
EOS
TEST
L-2
TEST 3
EOS
DP
PIX VALID
CURRENT SCAN LINES
PREVIOUS SCAN LINE
R-4
SCAN LINE ROM
ADDRESS
DATA
SCALE FACTOR
SCAN LINE COUNT
ADDER ROM
DATA
ADDRESS
R-5
PREVIOUS PIXEL ROM
SCALE FACTOR
1 VALID
2 VALID
R-4'
EOS(CLK)
DP RESET
D-15 POINTER SCAN LINE

FIG. 1'B

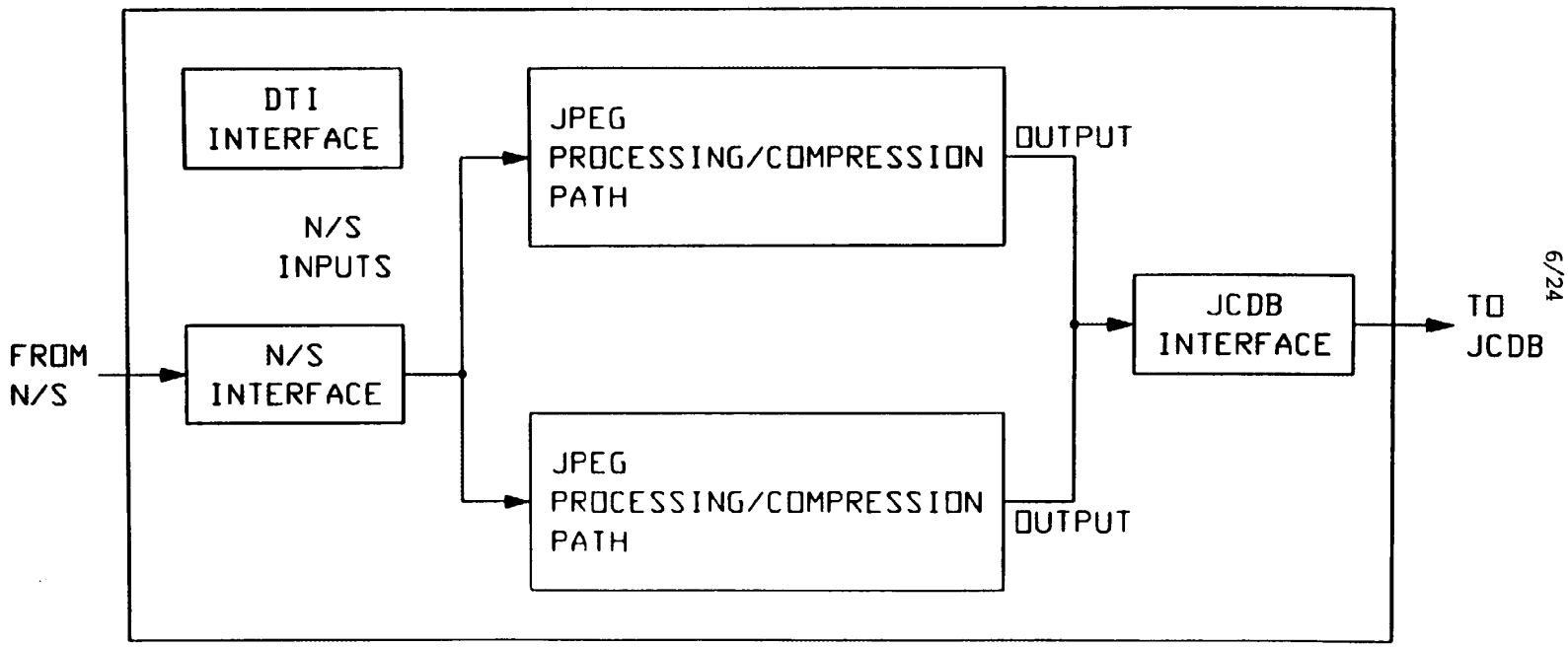
DTI
INTERFACE
N/S
INPUTS
FROM
N/S
N/S
INTERFACE
JPEG
PROCESSING/COMPRESSION
PATH
JPEG
PROCESSING/COMPRESSION
PATH
OUTPUT
OUTPUT
JCDB
INTERFACE
TO
JCDB

FIG. 1-C

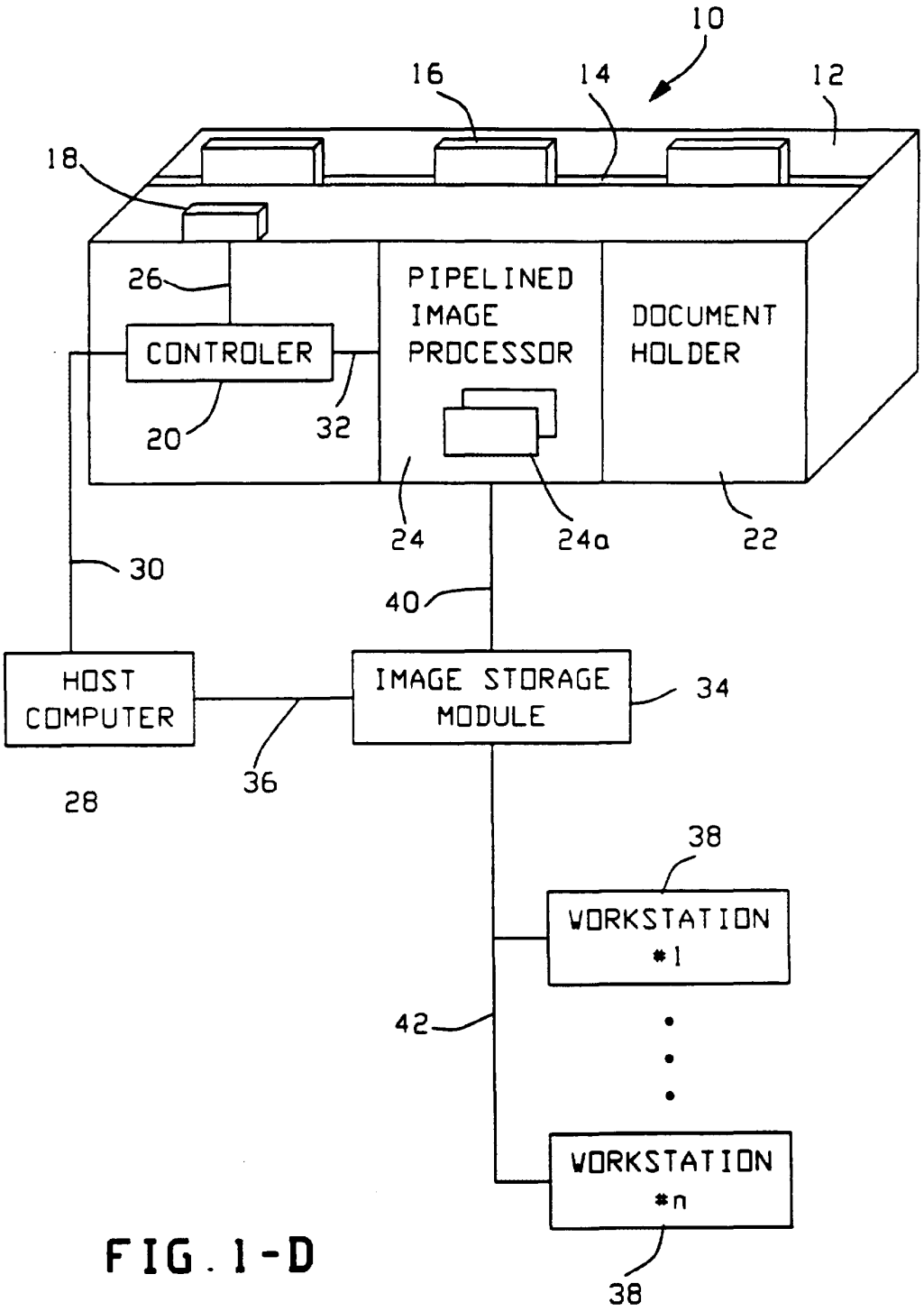
10
16
14
12
18
26
CONTROLER
PIPELINED IMAGE PROCESSOR
DOCUMENT HOLDER
20
32
24
24a
22
30
40
HOST COMPUTER
IMAGE STORAGE MODULE
34
36
28
38
WORKSTATION #1
42
WORKSTATION #n
38

FIG. 1-D

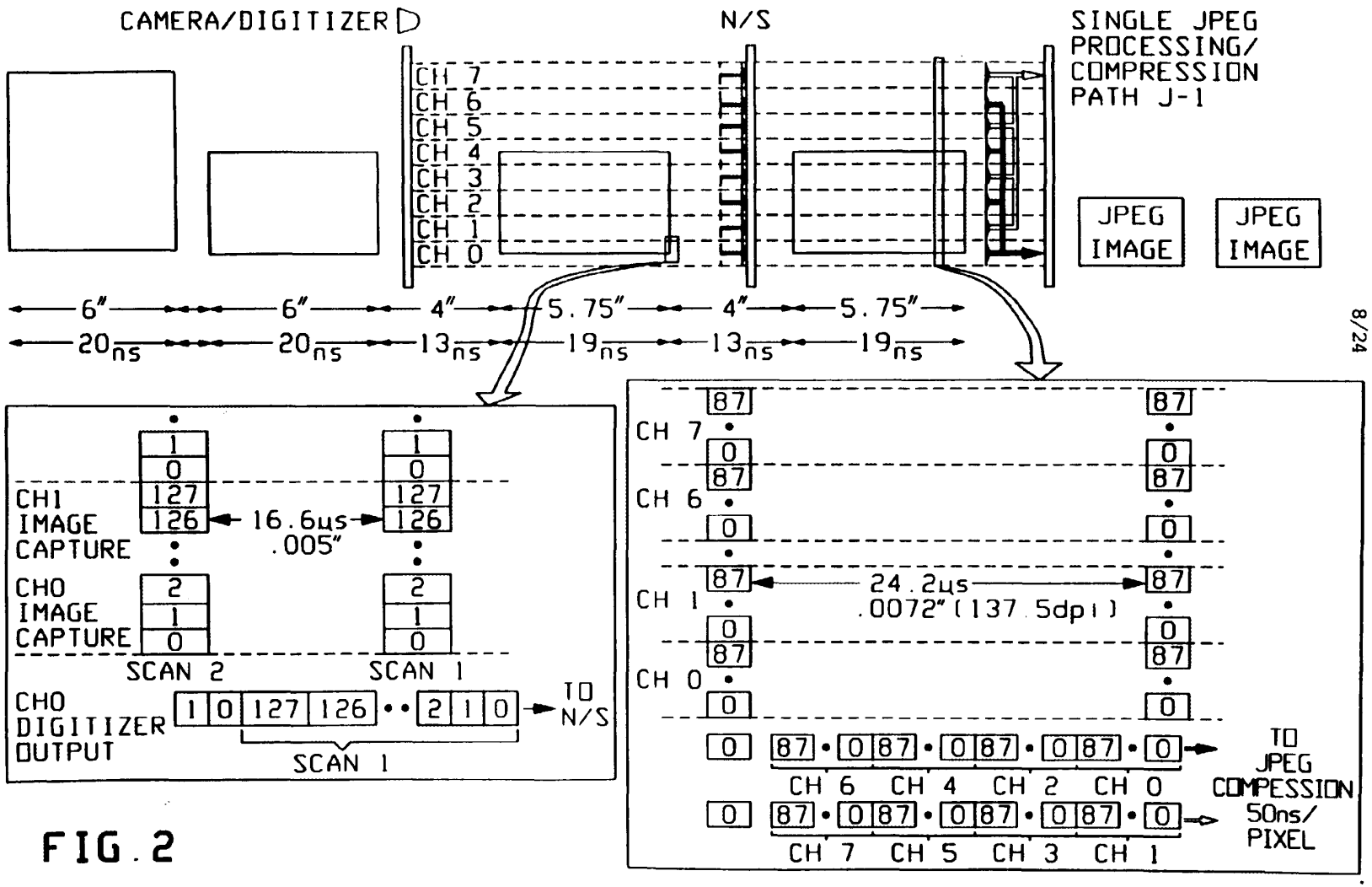
CAMERA/DIGITIZER
N/S
SINGLE JPEG PROCESSING/ COMPRESSION PATH J-1
CH 7
CH 6
CH 5
CH 4
CH 3
CH 2
CH 1
CH 0
JPEG IMAGE
JPEG IMAGE
6"
6"
4"
5.75"
4"
5.75"
20ns
20ns
13ns
19ns
13ns
19ns
CH1 IMAGE CAPTURE
CH0 IMAGE CAPTURE
16.6µs
.005"
SCAN 2
SCAN 1
CH0 DIGITIZER OUTPUT
TO N/S
24.2µs
.0072" (137.5dpi)
TO JPEG COMPESSION 50ns/ PIXEL
CH 6 CH 4 CH 2 CH 0
CH 7 CH 5 CH 3 CH 1

FIG. 2

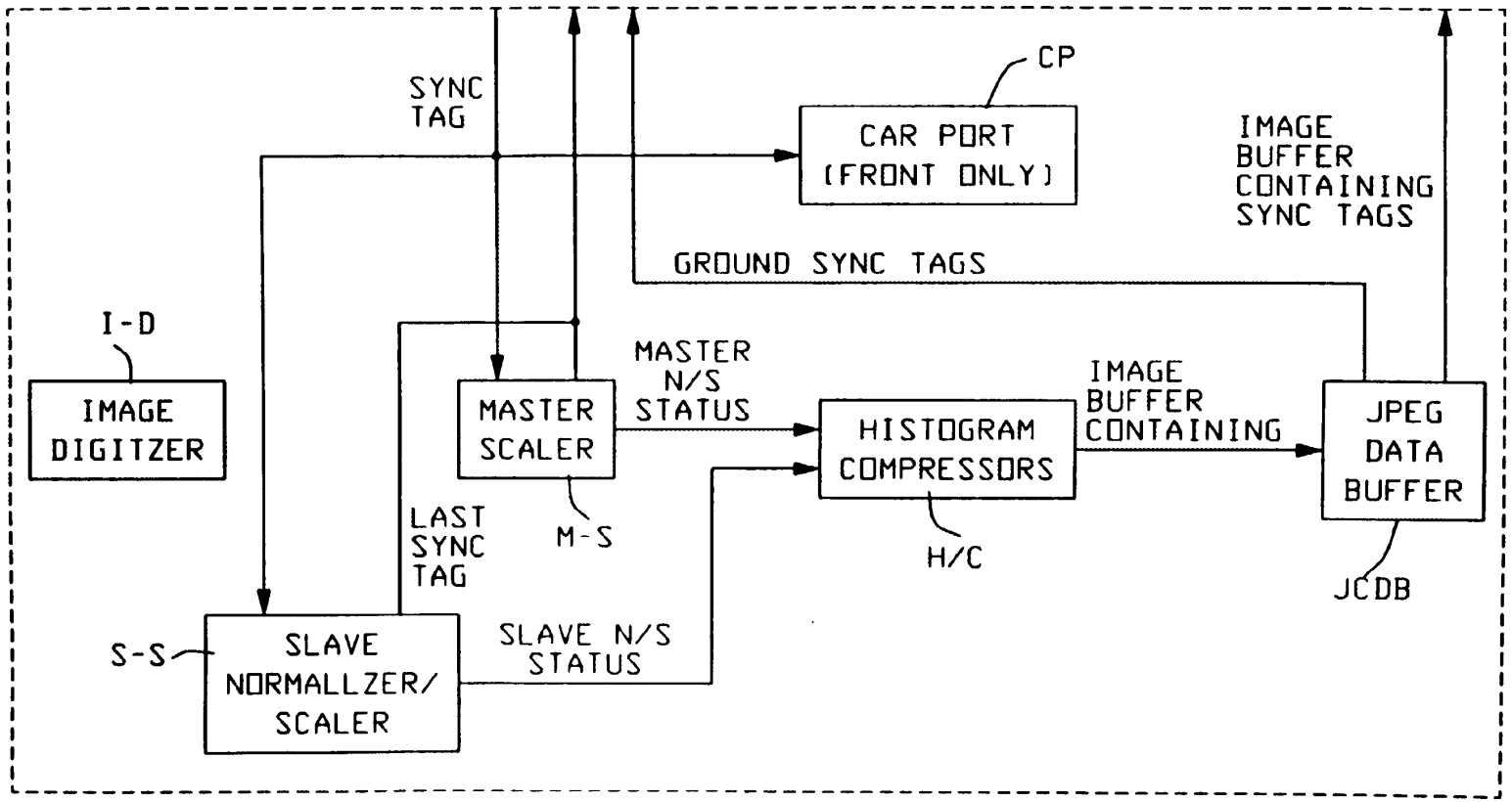
SYNC TAG
CP
CAR PORT (FRONT ONLY)
IMAGE BUFFER CONTAINING SYNC TAGS
GROUND SYNC TAGS
I-D
IMAGE DIGITZER
MASTER SCALER
MASTER N/S STATUS
HISTOGRAM COMPRESSORS
IMAGE BUFFER CONTAINING
JPEG DATA BUFFER
LAST SYNC TAG
M-S
H/C
JCDB
S-S
SLAVE NORMALLZER/ SCALER
SLAVE N/S STATUS

FIG. 2A

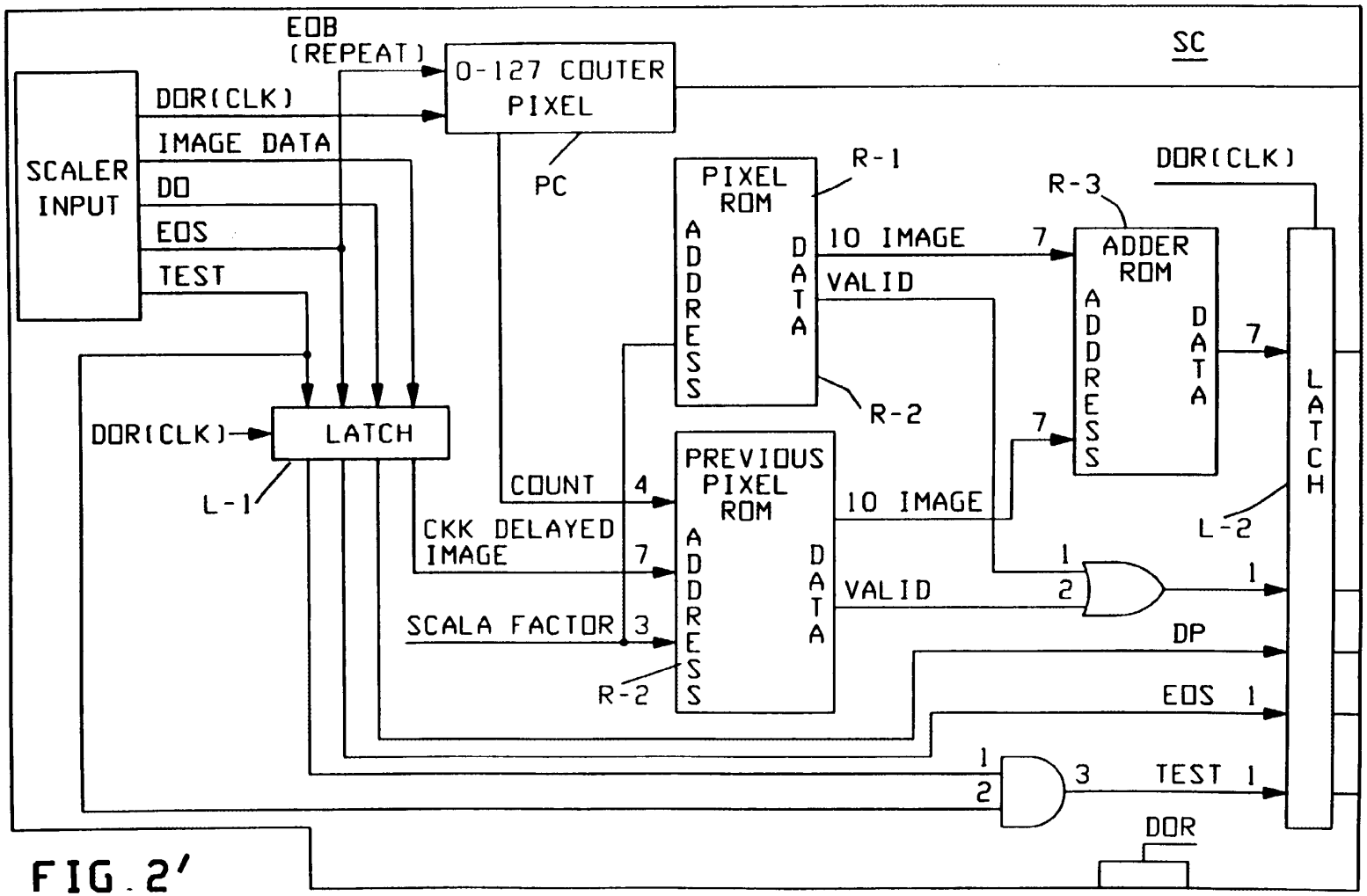
SC
EOB
(REPEAT)
0-127 COUTER
PIXEL
PC
SCALER
INPUT
DOR(CLK)
IMAGE DATA
DO
EOS
TEST
DOR(CLK)
LATCH
L-1
PIXEL
ROM
ADDRESS
DATA
R-1
R-2
10 IMAGE
VALID
PREVIOUS
PIXEL
ROM
ADDRESS
DATA
COUNT
CKK DELAYED
IMAGE
SCALA FACTOR
R-2
10 IMAGE
VALID
R-3
ADDER
ROM
ADDRESS
DATA
DOR(CLK)
LATCH
L-2
DP
EOS
TEST
DOR

FIG. 2'

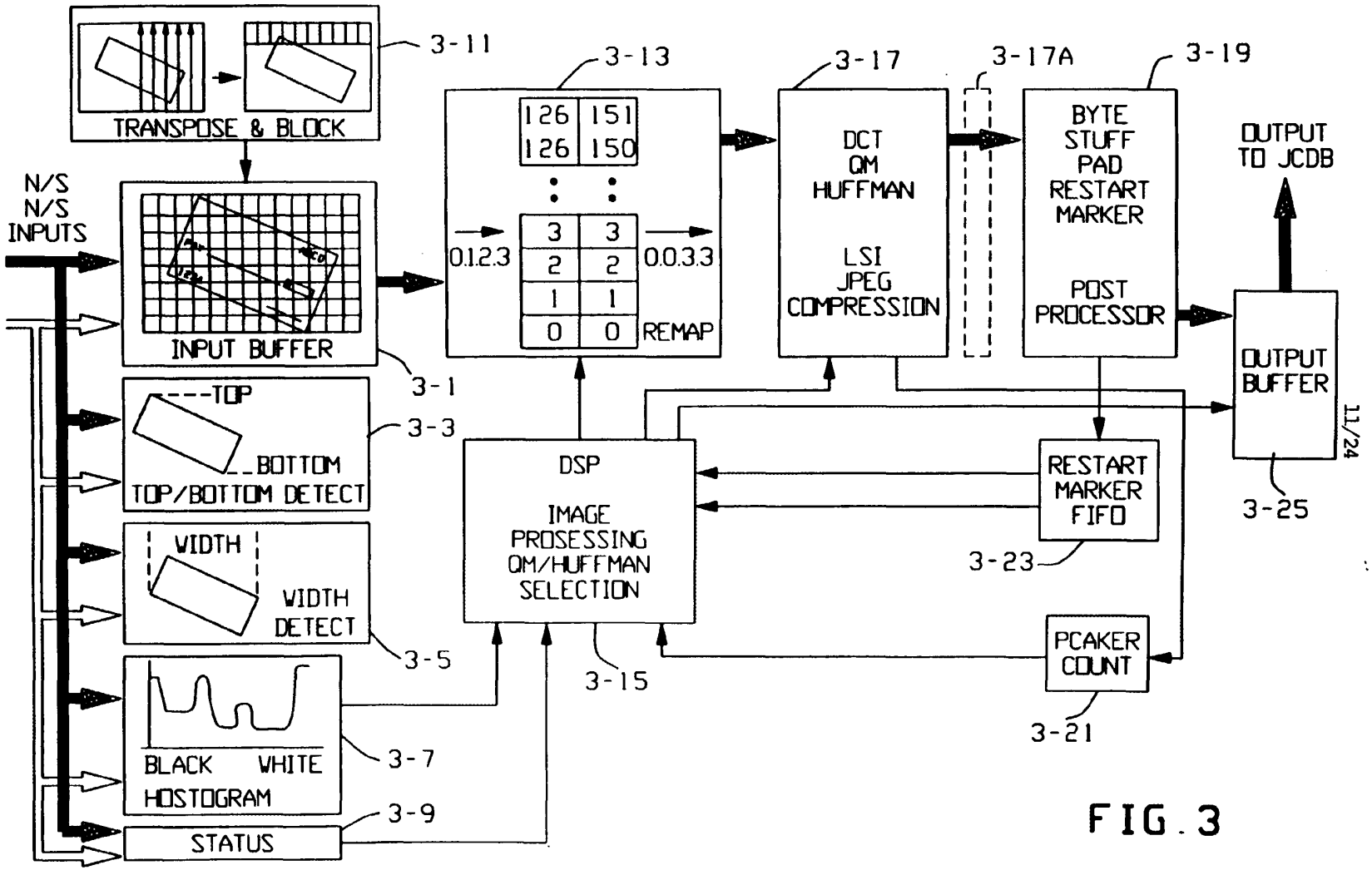
TRANSPOSE & BLOCK
3-11
N/S
N/S
INPUTS
INPUT BUFFER
3-1
3-13
126 151
126 150
3 3
2 2
1 1
0 0
0.1.2.3
0.0.3.3
REMAP
3-17
DCT
QM
HUFFMAN
LSI
JPEG
COMPRESSION
3-17A
3-19
BYTE
STUFF
PAD
RESTART
MARKER
POST
PROCESSOR
OUTPUT
TO JCDB
OUTPUT
BUFFER
3-25
TOP
BOTTOM
TOP/BOTTOM DETECT
3-3
DSP
IMAGE
PROSESSING
QM/HUFFMAN
SELECTION
3-15
RESTART
MARKER
FIFO
3-23
WIDTH
WIDTH
DETECT
3-5
PCAKER
COUNT
3-21
BLACK
WHITE
HOSTOGRAM
3-7
STATUS
3-9

FIG. 3

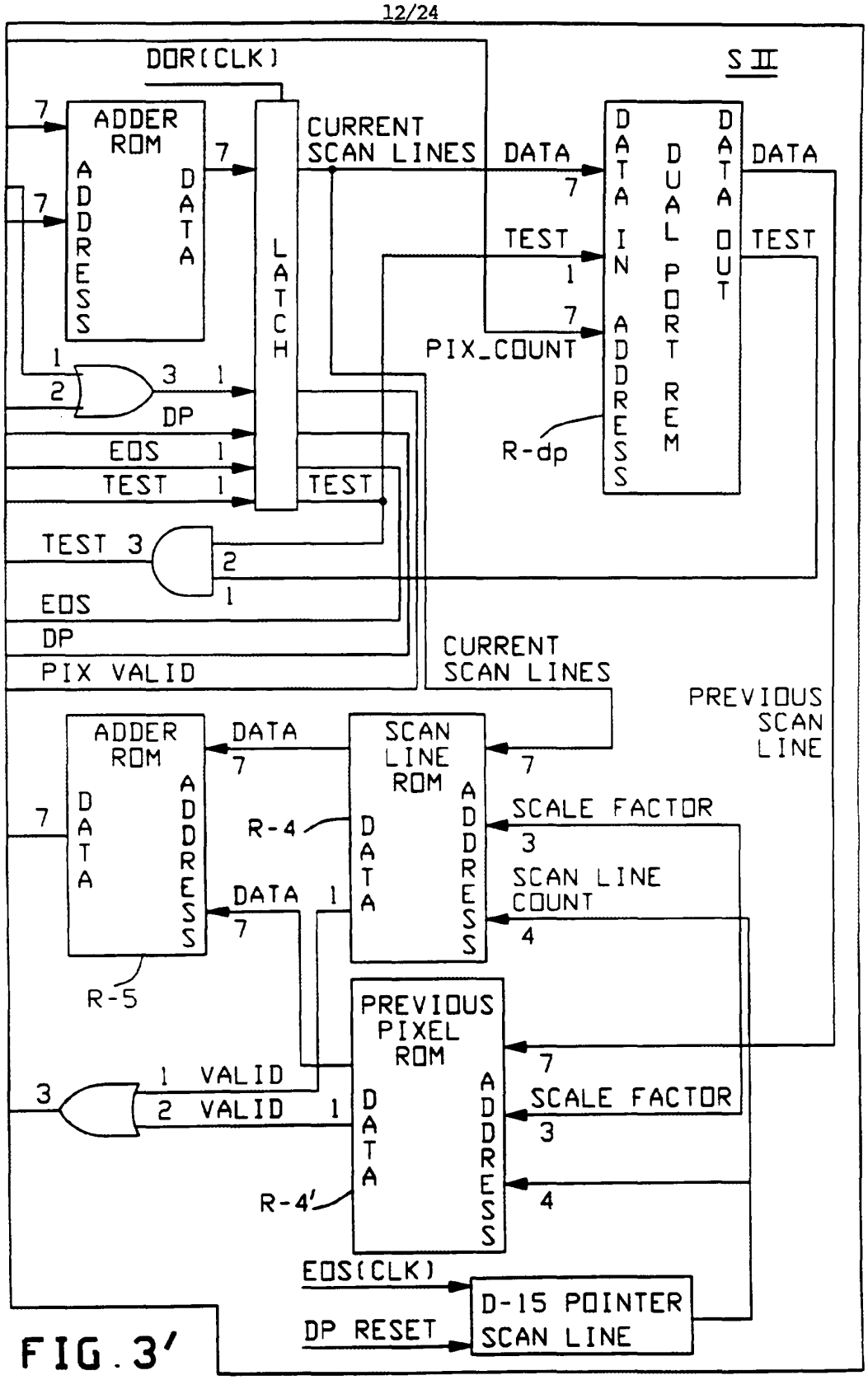
DOR(CLK)
S II
ADDER ROM
ADDRESS
DATA
LATCH
CURRENT SCAN LINES
DATA
TEST
PIX_COUNT
DATA IN
ADDRESS
DUAL PORT REM
DATA OUT
DATA
TEST
R-dp
DP
EOS
TEST
TEST
TEST 3
EOS
DP
PIX VALID
CURRENT SCAN LINES
PREVIOUS SCAN LINE
ADDER ROM
DATA
ADDRESS
DATA
SCAN LINE ROM
DATA
ADDRESS
SCALE FACTOR
SCAN LINE COUNT
R-4
R-5
PREVIOUS PIXEL ROM
DATA
ADDRESS
VALID
VALID
SCALE FACTOR
R-4'
EOS(CLK)
DP RESET
D-15 POINTER SCAN LINE

FIG. 3'

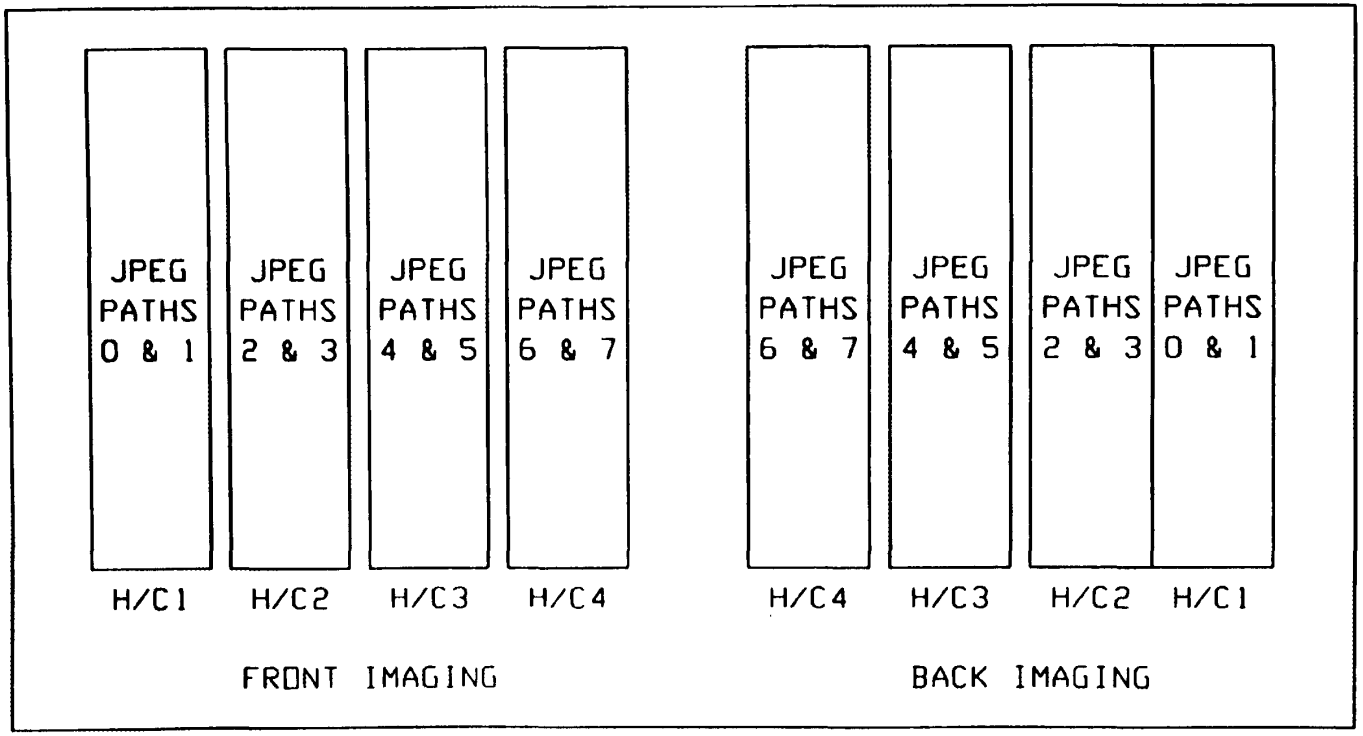
JPEG PATHS 0 & 1
JPEG PATHS 2 & 3
JPEG PATHS 4 & 5
JPEG PATHS 6 & 7
JPEG PATHS 6 & 7
JPEG PATHS 4 & 5
JPEG PATHS 2 & 3
JPEG PATHS 0 & 1
H/C1
H/C2
H/C3
H/C4
H/C4
H/C3
H/C2
H/C1
FRONT IMAGING
BACK IMAGING

FIG. 4

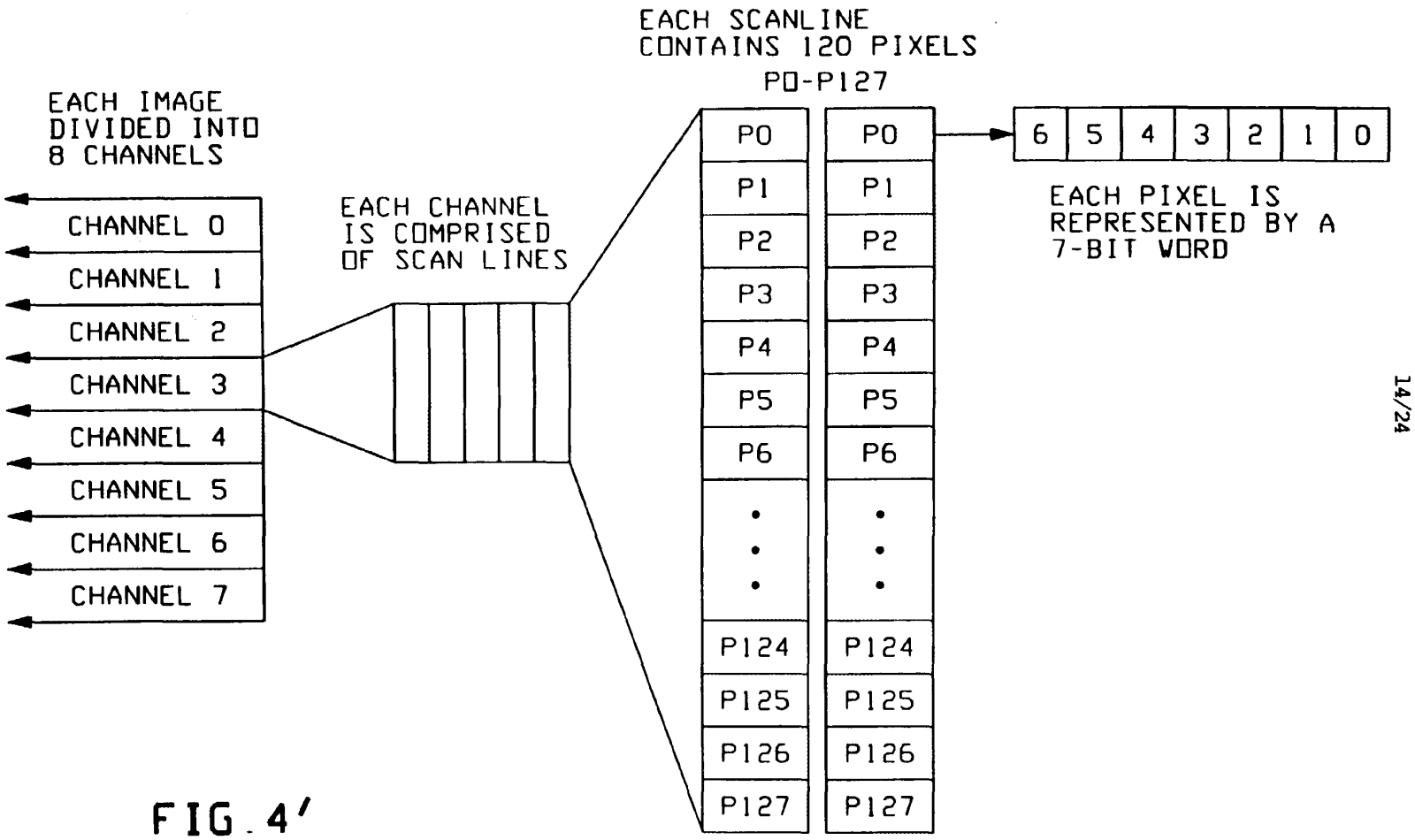
EACH IMAGE DIVIDED INTO 8 CHANNELS
CHANNEL 0
CHANNEL 1
CHANNEL 2
CHANNEL 3
CHANNEL 4
CHANNEL 5
CHANNEL 6
CHANNEL 7
EACH CHANNEL IS COMPRISED OF SCAN LINES
EACH SCANLINE CONTAINS 120 PIXELS
P0-P127
P0
P1
P2
P3
P4
P5
P6
P124
P125
P126
P127
6 5 4 3 2 1 0
EACH PIXEL IS REPRESENTED BY A 7-BIT WORD

FIG. 4'

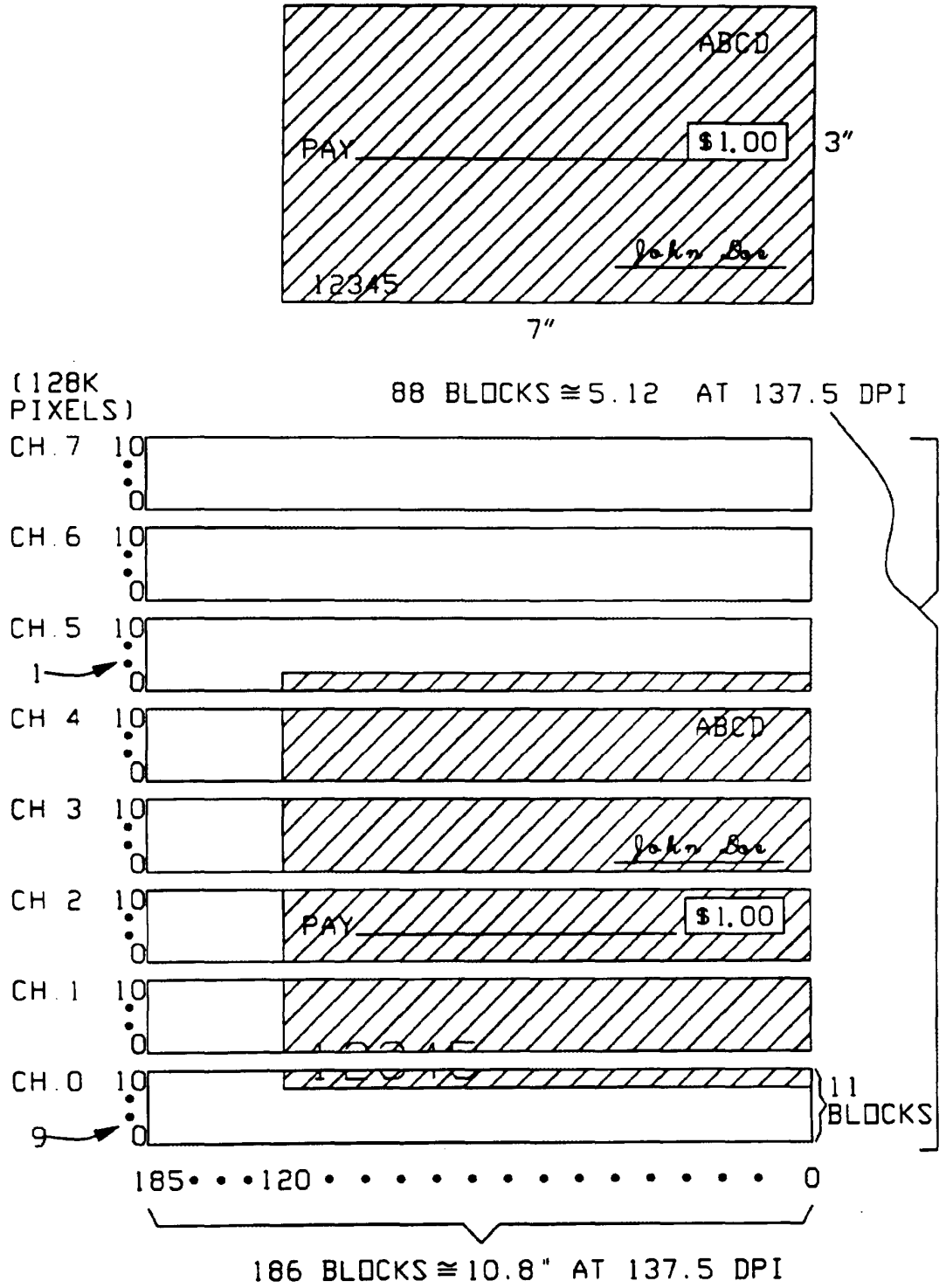
ABCD
PAY
$1.00
3"
John Doe
12345
7"
(128K PIXELS)
88 BLOCKS ≅ 5.12 AT 137.5 DPI
CH.7 10 0
CH.6 10 0
CH.5 10 0
1
CH 4 10 0
ABCD
CH 3 10 0
John Doe
CH 2 10 0
PAY
$1.00
CH.1 10 0
CH.0 10 0
9
11 BLOCKS
185 • • • 120 • • • • • • • • • • • • • • 0
186 BLOCKS ≅ 10.8" AT 137.5 DPI

FIG. 5

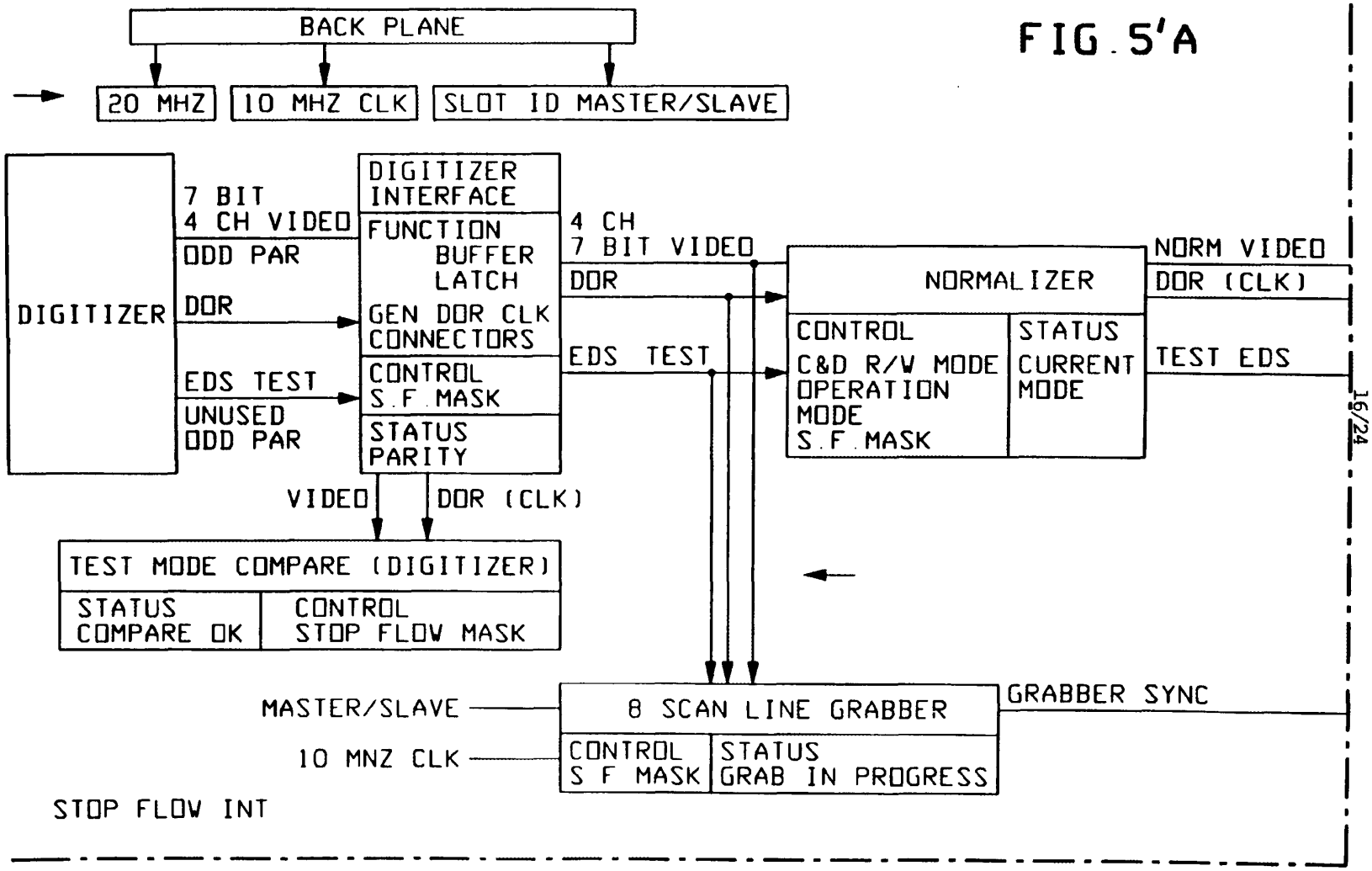
BACK PLANE
20 MHZ
10 MHZ CLK
SLOT ID MASTER/SLAVE
DIGITIZER
7 BIT
4 CH VIDEO
ODD PAR
DOR
EDS TEST
UNUSED
ODD PAR
DIGITIZER INTERFACE
FUNCTION BUFFER LATCH
GEN DOR CLK CONNECTORS
CONTROL S.F. MASK
STATUS PARITY
4 CH
7 BIT VIDEO
DOR
EDS TEST
NORMALIZER
CONTROL
C&D R/W MODE
OPERATION MODE
S.F. MASK
STATUS
CURRENT MODE
NORM VIDEO
DOR (CLK)
TEST EDS
VIDEO
DOR (CLK)
TEST MODE COMPARE (DIGITIZER)
STATUS
COMPARE OK
CONTROL
STOP FLOW MASK
MASTER/SLAVE
10 MNZ CLK
8 SCAN LINE GRABBER
CONTROL
S F MASK
STATUS
GRAB IN PROGRESS
GRABBER SYNC
STOP FLOW INT

FIG. 5'A

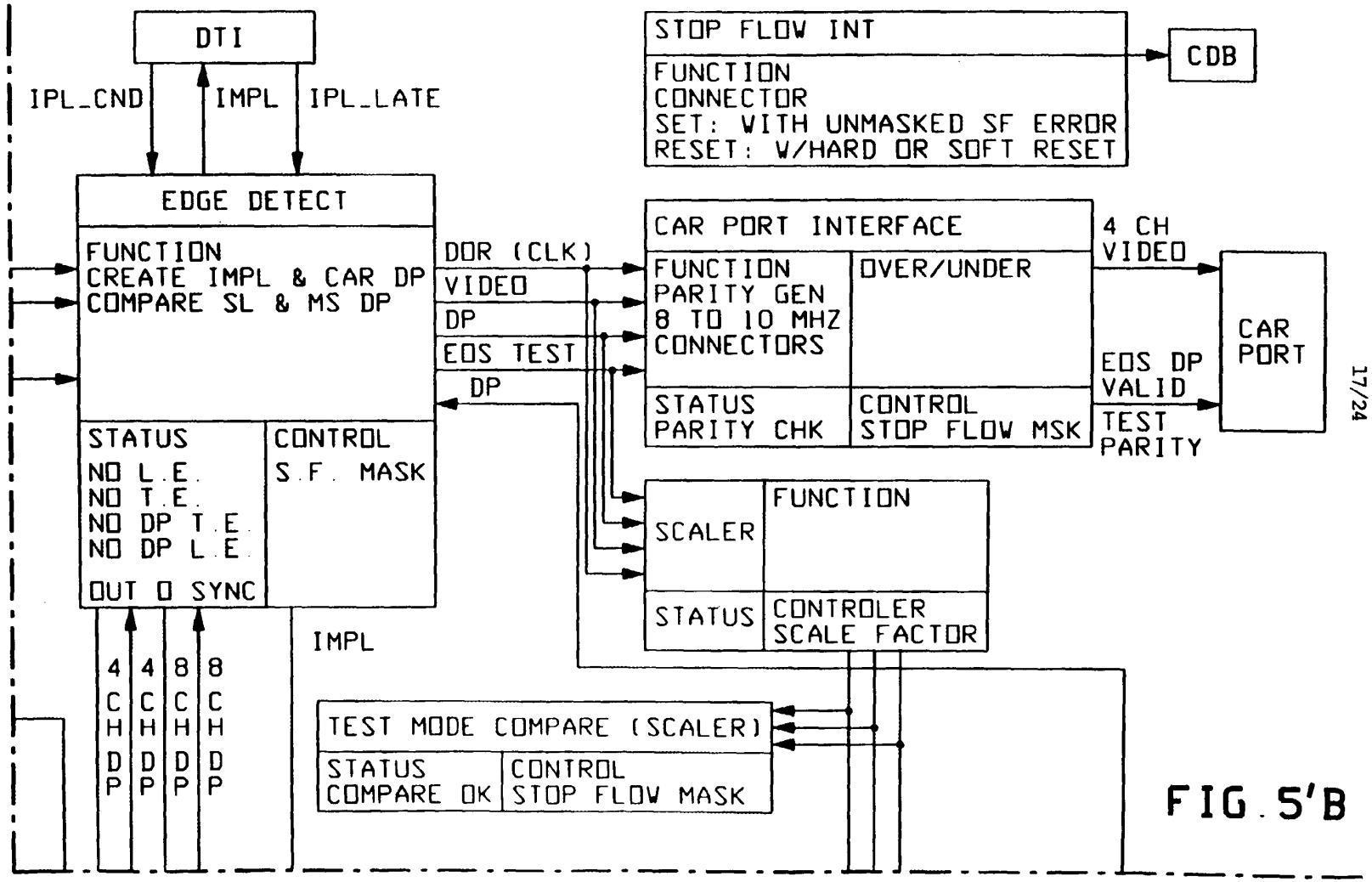
DTI
IPL_CND
IMPL
IPL_LATE
EDGE DETECT
FUNCTION
CREATE IMPL & CAR DP
COMPARE SL & MS DP
STATUS
NO L.E.
NO T.E.
NO DP T.E.
NO DP L.E.
OUT O SYNC
CONTROL
S.F. MASK
DOR (CLK)
VIDEO
DP
EOS TEST
DP
4 CH DP
4 CH DP
8 CH DP
8 CH DP
IMPL
STOP FLOW INT
FUNCTION
CONNECTOR
SET: WITH UNMASKED SF ERROR
RESET: W/HARD OR SOFT RESET
CDB
CAR PORT INTERFACE
FUNCTION
PARITY GEN
8 TO 10 MHZ
CONNECTORS
OVER/UNDER
STATUS
PARITY CHK
CONTROL
STOP FLOW MSK
4 CH VIDEO
EOS DP VALID
TEST PARITY
CAR PORT
SCALER
FUNCTION
STATUS
CONTROLER
SCALE FACTOR
TEST MODE COMPARE (SCALER)
STATUS
COMPARE OK
CONTROL
STOP FLOW MASK

FIG. 5'B

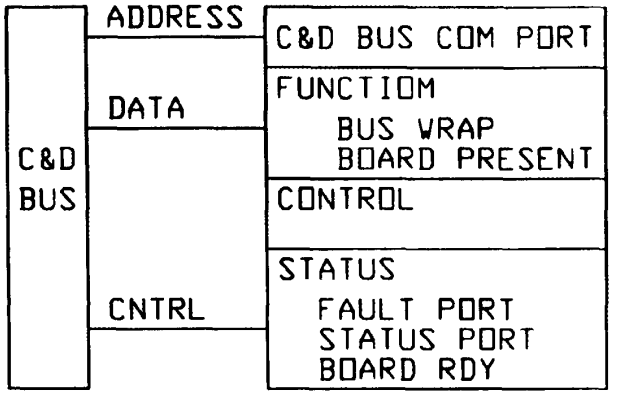
C&D BUS
ADDRESS
DATA
CNTRL
C&D BUS COM PORT
FUNCTIOM
BUS WRAP
BOARD PRESENT
CONTROL
STATUS
FAULT PORT
STATUS PORT
BOARD RDY

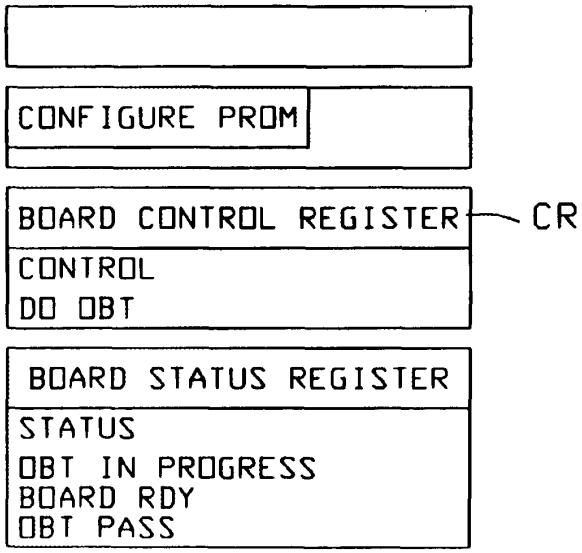
CONFIGURE PROM
BOARD CONTROL REGISTER
CR
CONTROL
DO OBT
BOARD STATUS REGISTER
STATUS
OBT IN PROGRESS
BOARD RDY
OBT PASS

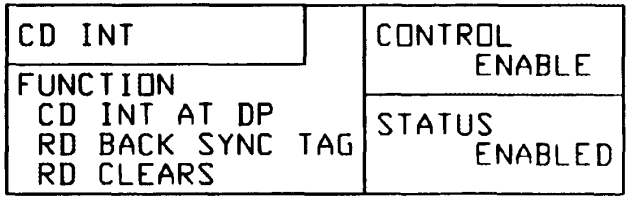
CD INT
FUNCTION
CD INT AT DP
RD BACK SYNC TAG
RD CLEARS
CONTROL
ENABLE
STATUS
ENABLED

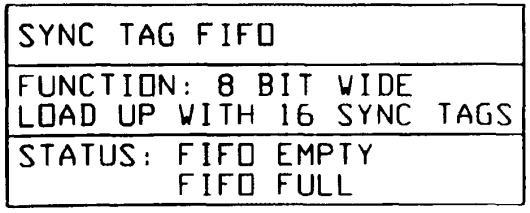
SYNC TAG FIFO
FUNCTION: 8 BIT WIDE
LOAD UP WITH 16 SYNC TAGS
STATUS: FIFO EMPTY
FIFO FULL

FIG. 5'C

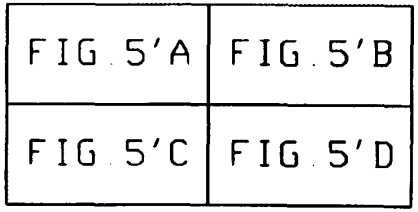
FIG. 5'A
FIG. 5'B
FIG. 5'C
FIG. 5'D

FIG. 5'

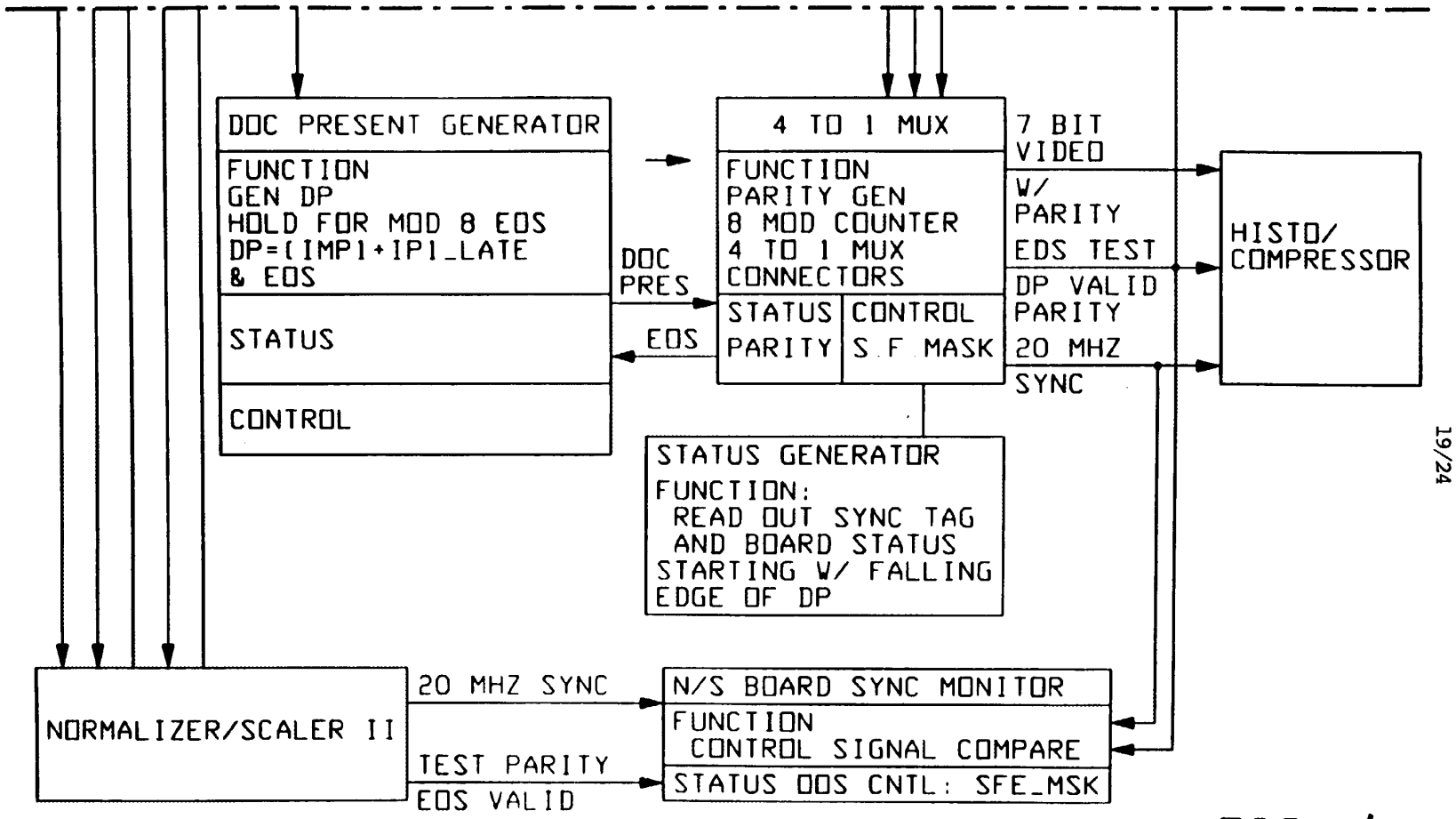
DOC PRESENT GENERATOR
FUNCTION
GEN DP
HOLD FOR MOD 8 EOS
DP=(IMP1+IP1_LATE
& EOS
STATUS
CONTROL
DOC
PRES
EOS
4 TO 1 MUX
FUNCTION
PARITY GEN
8 MOD COUNTER
4 TO 1 MUX
CONNECTORS
STATUS
CONTROL
PARITY
S.F MASK
7 BIT
VIDEO
W/
PARITY
EDS TEST
DP VALID
PARITY
20 MHZ
SYNC
HISTO/
COMPRESSOR
STATUS GENERATOR
FUNCTION:
READ OUT SYNC TAG
AND BOARD STATUS
STARTING W/ FALLING
EDGE OF DP
NORMALIZER/SCALER II
20 MHZ SYNC
TEST PARITY
EOS VALID
N/S BOARD SYNC MONITOR
FUNCTION
CONTROL SIGNAL COMPARE
STATUS DOS CNTL: SFE_MSK

FIG. 5'D

FIG. 6

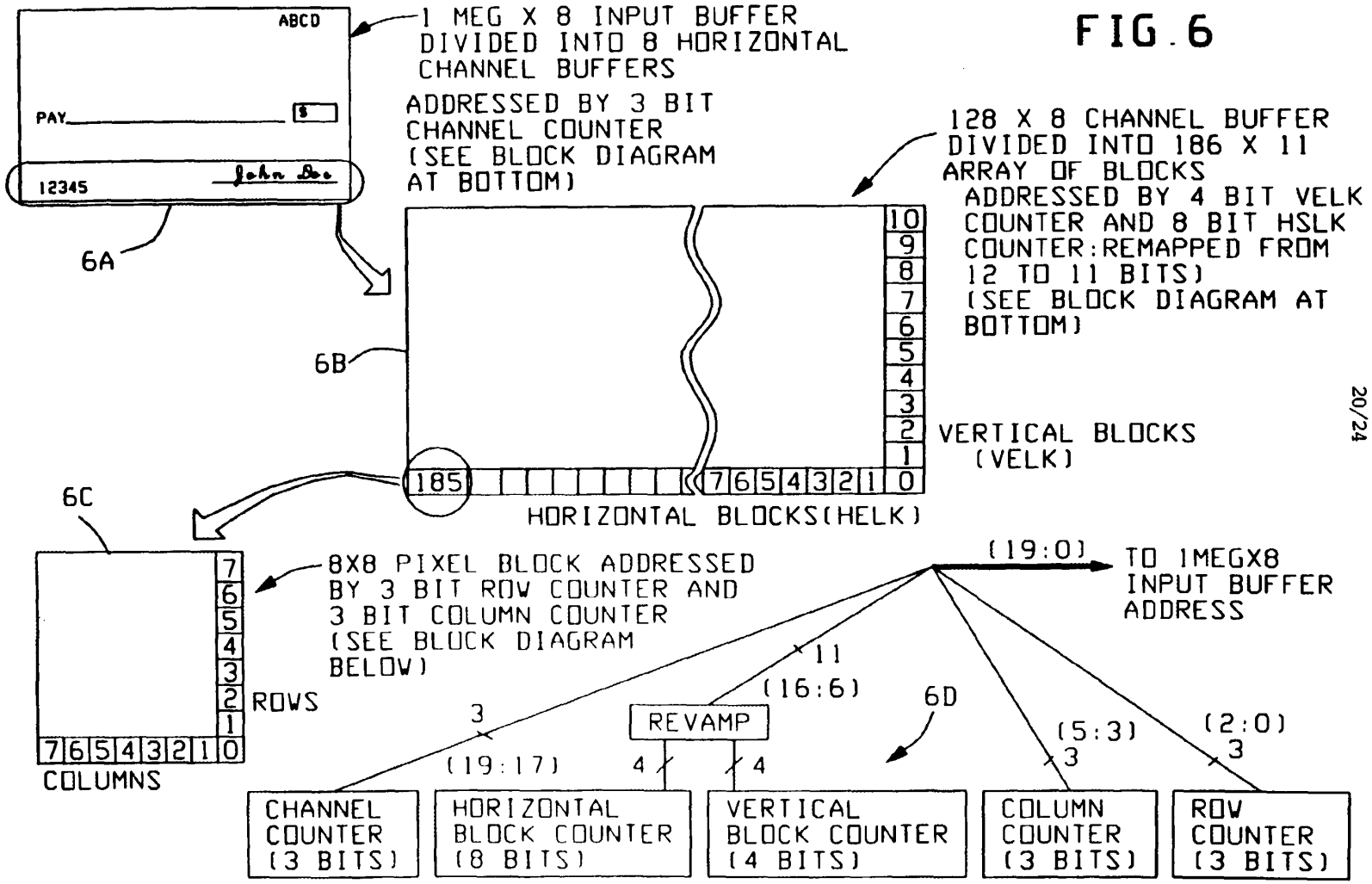
ABCD
PAY
$
12345
John Doe
6A
1 MEG X 8 INPUT BUFFER DIVIDED INTO 8 HORIZONTAL CHANNEL BUFFERS
ADDRESSED BY 3 BIT CHANNEL COUNTER (SEE BLOCK DIAGRAM AT BOTTOM)
128 X 8 CHANNEL BUFFER DIVIDED INTO 186 X 11 ARRAY OF BLOCKS ADDRESSED BY 4 BIT VELK COUNTER AND 8 BIT HSLK COUNTER:REMAPPED FROM 12 TO 11 BITS) (SEE BLOCK DIAGRAM AT BOTTOM)
6B
10 9 8 7 6 5 4 3 2 1
VERTICAL BLOCKS (VELK)
185
7 6 5 4 3 2 1 0
HORIZONTAL BLOCKS(HELK)
6C
7 6 5 4 3 2 1
ROWS
7 6 5 4 3 2 1 0
COLUMNS
8X8 PIXEL BLOCK ADDRESSED BY 3 BIT ROW COUNTER AND 3 BIT COLUMN COUNTER (SEE BLOCK DIAGRAM BELOW)
(19:0)
TO 1MEGX8 INPUT BUFFER ADDRESS
11
(16:6)
6D
REVAMP
3
(19:17)
4
4
(5:3)
3
(2:0)
3
CHANNEL COUNTER (3 BITS)
HORIZONTAL BLOCK COUNTER (8 BITS)
VERTICAL BLOCK COUNTER (4 BITS)
COLUMN COUNTER (3 BITS)
ROW COUNTER (3 BITS)

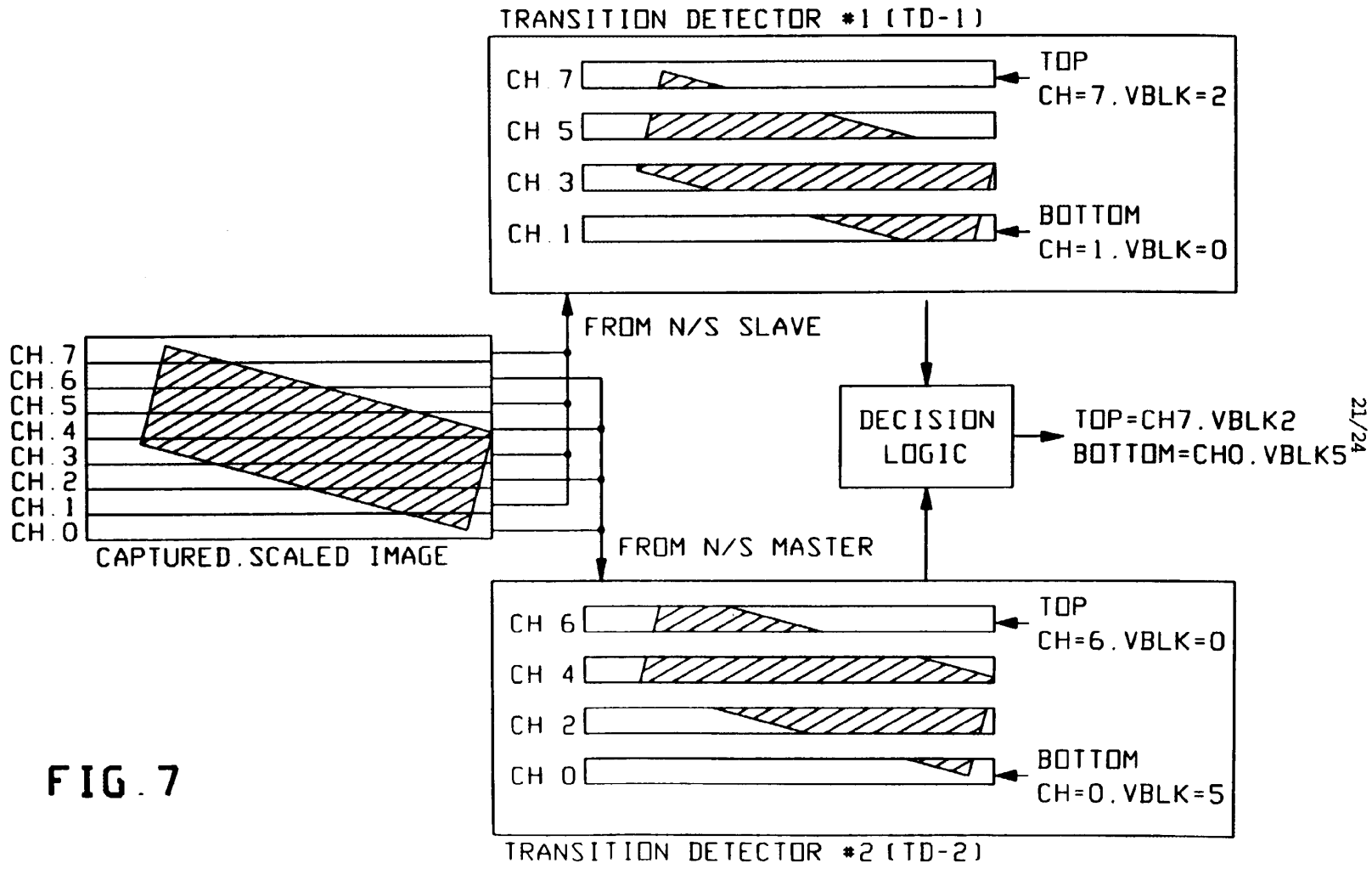
TRANSITION DETECTOR #1 (TD-1)
CH 7
CH 5
CH 3
CH 1
TOP
CH=7.VBLK=2
BOTTOM
CH=1.VBLK=0
FROM N/S SLAVE
CH.7
CH.6
CH.5
CH.4
CH.3
CH.2
CH.1
CH.0
CAPTURED.SCALED IMAGE
DECISION LOGIC
TOP=CH7.VBLK2
BOTTOM=CH0.VBLK5
FROM N/S MASTER
CH 6
CH 4
CH 2
CH 0
TOP
CH=6.VBLK=0
BOTTOM
CH=0.VBLK=5
TRANSITION DETECTOR #2 (TD-2)

FIG.7

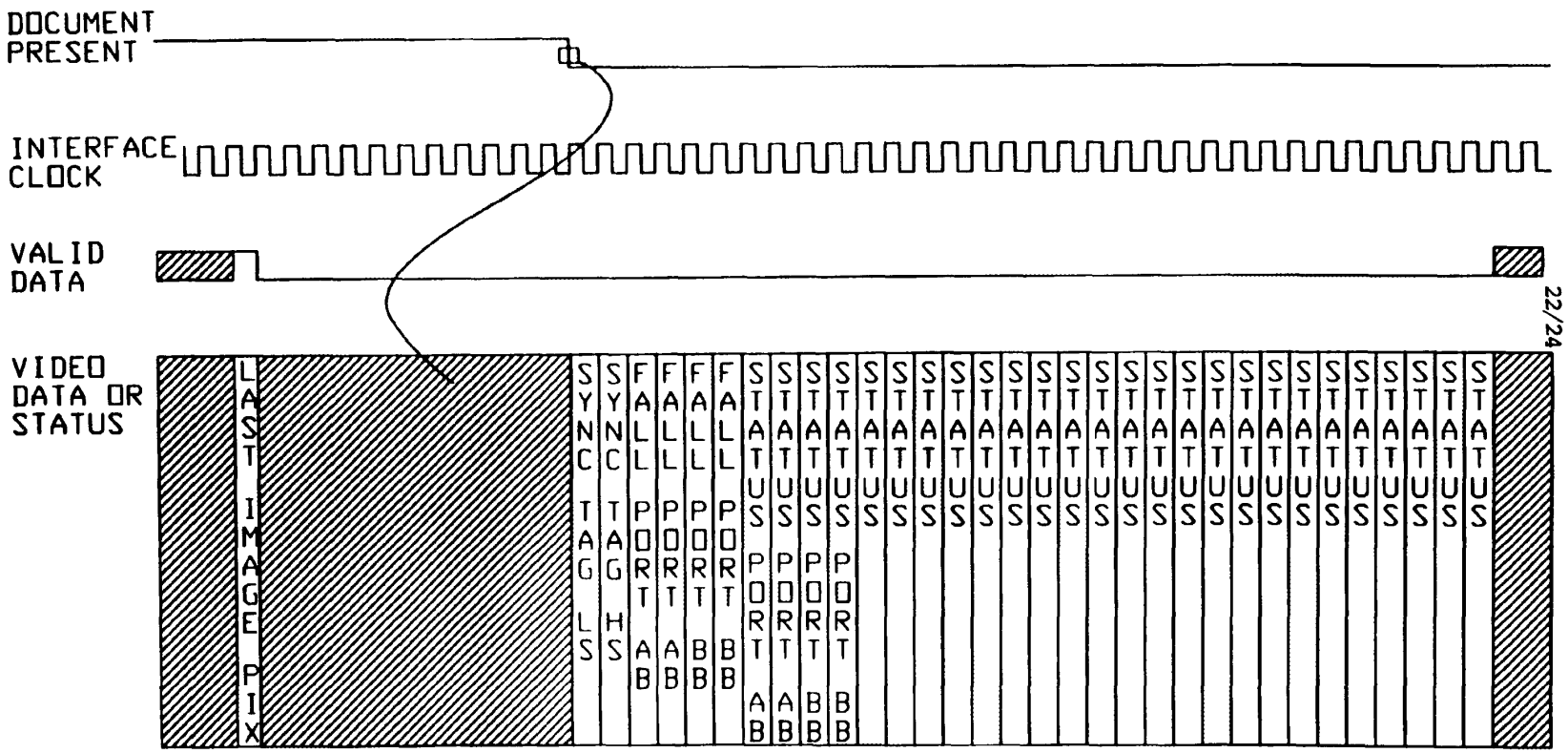
DOCUMENT PRESENT
INTERFACE CLOCK
VALID DATA
VIDEO DATA OR STATUS
LAST IMAGE PIX
SYNC TAG LS
SYNC TAG HS
FALL PORT AB
FALL PORT AB
FALL PORT BB
FALL PORT BB
STATUS PORT AB
STATUS PORT AB
STATUS PORT BB
STATUS PORT BB
STATUS

FIG. 8

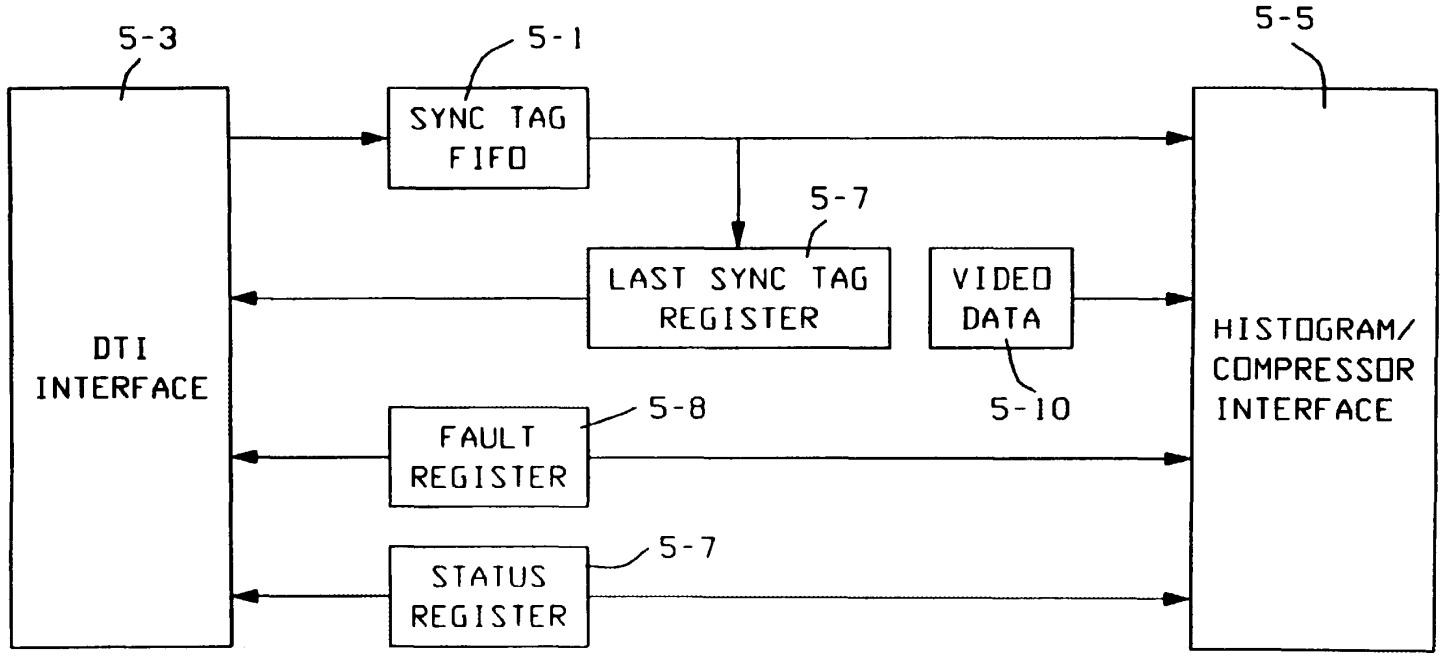
5-3
DTI INTERFACE
5-1
SYNC TAG FIFO
5-7
LAST SYNC TAG REGISTER
VIDEO DATA
5-10
5-8
FAULT REGISTER
5-7
STATUS REGISTER
5-5
HISTOGRAM/ COMPRESSOR INTERFACE

FIG. 9

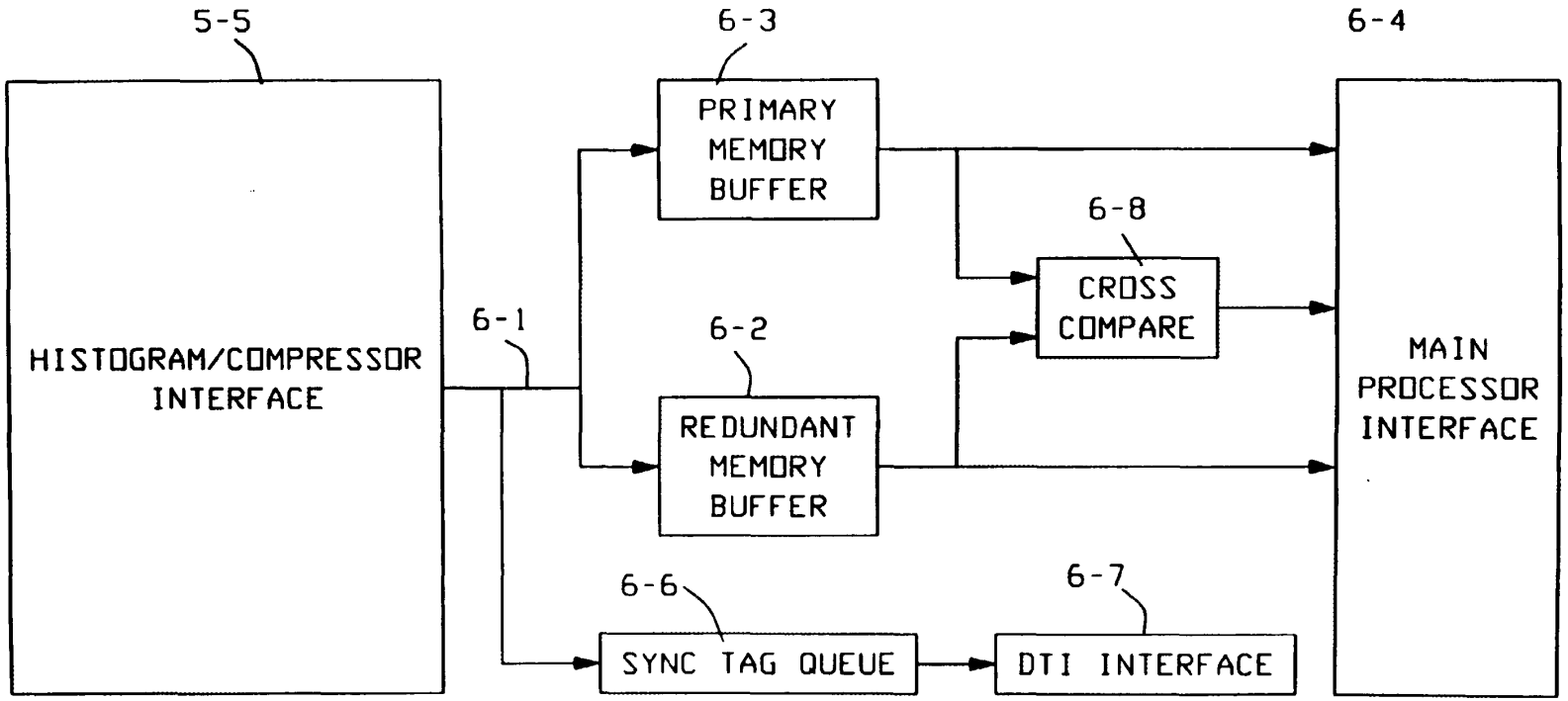
5-5
HISTOGRAM/COMPRESSOR INTERFACE
6-1
6-3
PRIMARY MEMORY BUFFER
6-2
REDUNDANT MEMORY BUFFER
6-8
CROSS COMPARE
6-4
MAIN PROCESSOR INTERFACE
6-6
SYNC TAG QUEUE
6-7
DTI INTERFACE

FIG. 10

INTERNATIONAL SEARCH REPORT

Internatio Application No
PCT/US 95/14596

A. CLASSIFICATION OF SUBJECT MATTER
IPC 6 H04N1/32

According to International Patent Classification (IPC) or to both national classification and IPC

B. FIELDS SEARCHED

Minimum documentation searched (classification system followed by classification symbols)
IPC 6 H04N

Documentation searched other than minimum documentation to the extent that such documents are included in the fields searched

Electronic data base consulted during the international search (name of data base and, where practical, search terms used)

C. DOCUMENTS CONSIDERED TO BE RELEVANT

Category *	Citation of document, with indication, where appropriate, of the relevant passages	Relevant to claim No.
A	EP,A,0 376 312 (CANON KK) 4 July 1990 see column 1, line 44 - column 8, line 45 ---	1,4,5,22
A	US,A,5 136 665 (INOUE KEISHI) 4 August 1992 see abstract see column 6, line 23 - line 29 ---	1,4,5,22
A	US,A,5 070 404 (BULLOCK WAYNE J ET AL) 3 December 1991 see abstract see column 4, line 4 - line 27 ---	1,22
A	EP,A,0 320 713 (INTERNATIONAL BUSINESS MACHINES CORPORATION) 21 June 1989 -----	

☐ Further documents are listed in the continuation of box C.

☒ Patent family members are listed in annex.

* Special categories of cited documents :

"A" document defining the general state of the art which is not considered to be of particular relevance

"E" earlier document but published on or after the international filing date

"L" document which may throw doubts on priority claim(s) or which is cited to establish the publication date of another citation or other special reason (as specified)

"O" document referring to an oral disclosure, use, exhibition or other means

"P" document published prior to the international filing date but later than the priority date claimed

"T" later document published after the international filing date or priority date and not in conflict with the application but cited to understand the principle or theory underlying the invention

"X" document of particular relevance; the claimed invention cannot be considered novel or cannot be considered to involve an inventive step when the document is taken alone

"Y" document of particular relevance; the claimed invention cannot be considered to involve an inventive step when the document is combined with one or more other such documents, such combination being obvious to a person skilled in the art.

"&" document member of the same patent family

1

Date of the actual completion of the international search	Date of mailing of the international search report
12 March 1996	27.03.96
Name and mailing address of the ISA European Patent Office, P.B. 5818 Patentlaan 2 NL - 2280 HV Rijswijk Tel. (+31-70) 340-2040, Tx. 31 651 epo nl, Fax (+31-70) 340-3016	Authorized officer Hazel, J

Form PCT/ISA/210 (second sheet) (July 1992)

INTERNATIONAL SEARCH REPORT

Ir. .ation on patent family members

Internatic Application No
PCT/US 95/14596

Patent document cited in search report	Publication date	Patent family member(s)		Publication date
EP-A-0376312	04-07-90	JP-A-	2234273	17-09-90
		JP-A-	2179159	12-07-90
		US-A-	5280545	18-01-94
US-A-5136665	04-08-92	JP-A-	1198174	09-08-89
US-A-5070404	03-12-91	NONE		
EP-A-320713	21-06-89	US-A-	4888812	19-12-89
		DE-D-	3850066	14-07-94
		DE-T-	3850066	01-12-94
		JP-A-	1191976	02-08-89

Form PCT/ISA/210 (patent family annex) (July 1992)

(12) INTERNATIONAL APPLICATION PUBLISHED UNDER THE PATENT COOPERATION TREATY (PCT)

(19) World Intellectual Property Organization
International Bureau

(43) International Publication Date
1 March 2007 (01.03.2007)

PCT

(10) International Publication Number
WO 2007/024889 A2

(51) International Patent Classification:
G06K 9/00 (2006.01)

(21) International Application Number:
PCT/US2006/032831

(22) International Filing Date: 22 August 2006 (22.08.2006)

(25) Filing Language: English

(26) Publication Language: English

(30) Priority Data:
11/210,004 23 August 2005 (23.08.2005) US

(63) Related by continuation (CON) or continuation-in-part (CIP) to earlier application:
US 11/210004 (CON)
Filed on 23 August 2005 (23.08.2005)

(71) Applicant *(for all designated States except US)*: **ALOGENT CORPORATION** [US/US]; 4005 Windward Plaza, Second Floor, Alpharetta, Georgia 30005 (US).

(72) Inventors; and
(75) Inventors/Applicants *(for US only)*: **VERMA, Amar K.** [US/US]; 525 Crepe Myrtle Court, Alpharetta, Georgia 30005 (US). **GANGADHAR, Ranjee B.** [IN/US]; 10140 Barston Court, Alpharetta, Georgia 30022 (US).

(74) Agents: **MCCLAUGHRY, David A.** et al.; HARNESS, DICKEY & PIERCE, P.L.C., P.o. Box 828, Bloomfield Hills, Michigan 48303 (US).

(81) Designated States *(unless otherwise indicated, for every kind of national protection available)*: AE, AG, AL, AM, AT, AU, AZ, BA, BB, BG, BR, BW, BY, BZ, CA, CH, CN, CO, CR, CU, CZ, DE, DK, DM, DZ, EC, EE, EG, ES, FI, GB, GD, GE, GH, GM, HN, HR, HU, ID, IL, IN, IS, JP, KE, KG, KM, KN, KP, KR, KZ, LA, LC, LK, LR, LS, LT, LU, LV, LY, MA, MD, MG, MK, MN, MW, MX, MY, MZ, NA, NG, NI, NO, NZ, OM, PG, PH, PL, PT, RO, RS, RU, SC, SD, SE, SG, SK, SL, SM, SV, SY, TJ, TM, TN, TR, TT, TZ, UA, UG, UZ, VC, VN, ZA, ZM, ZW.

(84) Designated States *(unless otherwise indicated, for every kind of regional protection available)*: ARIPO (BW, GH, GM, KE, LS, MW, MZ, NA, SD, SL, SZ, TZ, UG, ZM, ZW), Eurasian (AM, AZ, BY, KG, KZ, MD, RU, TJ, TM), European (AT, BE, BG, CH, CY, CZ, DE, DK, EE, ES, FI, FR, GB, GR, HU, IE, IS, IT, LT, LU, LV, MC, NL, PL, PT, RO, SE, SI, SK, TR), OAPI (BF, BJ, CF, CG, CI, CM, GA, GN, GQ, GW, ML, MR, NE, SN, TD, TG).

Declarations under Rule 4.17:
— *as to applicant's entitlement to apply for and be granted a patent (Rule 4.17(ii))*
— *as to the applicant's entitlement to claim the priority of the earlier application (Rule 4.17(iii))*

Published:
— *without international search report and to be republished upon receipt of that report*

For two-letter codes and other abbreviations, refer to the "Guidance Notes on Codes and Abbreviations" appearing at the beginning of each regular issue of the PCT Gazette.

(54) Title: REAL TIME IMAGE QUALITY ANALYSIS AND VERIFICATION

(57) Abstract: A configurable image quality analysis system for use at a point of presentment includes an input receptive of an item image of a physical item at least partially embodying a financial transaction. An image quality module is adapted to perform a plurality of image quality tests on the item image according to a plurality of configurable test parameters. An edit module is adapted to perform at least one edit on images of unacceptable quality as defined by the image quality module according to a plurality of configurable edit parameters. An output is adapted to report results of the tests of the image quality module and an edited image from the edit module.

WO 2007/024889 A2

REAL TIME IMAGE QUALITY ANALYSIS AND VERIFICATION

FIELD OF THE INVENTION

[0001] The present invention generally relates to financial transaction systems, methods, and devices, and particularly to systems and methods of transactions at point of presentment utilizing image quality analysis and verification.

BACKGROUND OF THE INVENTION

[0002] Financial institutions typically interact with parties to transactions, such as individuals, partnerships, companies, and corporations, by providing points of presentment at locations that are convenient to the parties to the transactions. Points of presentment include, for example, front counters of bank branches, cash vaults, merchant back offices, and automated teller machines (ATMs) providing deposit automation. Parties to transactions present physical items embodying a transaction at these points of presentment, and these items typically include checks, cash, withdrawal slips, deposit slips, loan payment slips, and/or remittance slips. Images of these items are taken at the point of presentment to assist in the processing of the transaction.

[0003] While tellers often assist parties to transactions at some points of presentment, these tellers are typically required to spend excessive amounts of time and attention to data entry and transaction balancing. Furthermore, the tellers typically have no way of ensuring that all items of a transaction are valid. In addition, points of presentment affording no teller assistance rely entirely on the party to the transaction to ensure that the transaction is balanced. Thus, the teller's focus is on the transaction and not the customer.

[0004] Often financial institution branches will initiate a transaction at the point of presentment, then re-initiate assembly and processing of the transaction and images of the transaction, long after the party to the transaction has departed the point of presentment. As a result, unbalanced and/or invalid transactions, and image mismatches are discovered late, without affording the party to the transaction or the teller at the point of presentment an opportunity to correct or otherwise balance the transaction.

[0005] For financial institutions to be capable of truncating items at the point of presentment, and to comply with newly published standards for the exchange of image based transactions, (ANSI DSTU X9.37 2003), it is necessary to perform a plurality of quality, usability and integrity tests upon the item images. Given that truncation standards may allow for destruction of the paper item at the point of presentment, item images must be qualified at the point of presentment during capture of the transactions.

[0006] The need remains, therefore, for a system and method of processing a transaction at a point of presentment that improves quality control of transactions and images, in a real time mode, while reducing time and labor requirements at a point of presentment. The present invention fulfills this need.

SUMMARY OF THE INVENTION

[0007] In accordance with the present invention, a configurable image quality analysis system for use at a point of presentment includes an input receptive of an image of a physical item which at least partially embodies a financial transaction. An image quality module is adapted to perform a plurality of quality tests on the image according to a plurality of configurable test parameters, inclusive of validating the image against the item information associated with it. An edit module is adapted to perform at least one edit on images of unacceptable quality as defined by the image quality module according to a plurality of configurable edit parameters. An output is adapted to report results of the tests of the image quality module and an edited image from the edit module.

[0008] Further areas of applicability of the present invention will become apparent from the detailed description provided hereinafter. It should be understood that the detailed description and specific examples, while indicating the preferred embodiment of the invention, are intended for purposes of illustration only and are not intended to limit the scope of the invention.

BRIEF DESCRIPTION OF THE DRAWINGS

[0009] The present invention will become more fully understood from the detailed description and the accompanying drawings, wherein:

[0010] Figure 1 is a an entity relationship diagram illustrating a financial transaction system implemented at a point of presentment according to the present invention;

[0011] Figure 2 is a functional block diagram illustrating an image quality analysis, transaction processing system for use at a point of presentment according to the present invention; and

[0012] Figure 3 is a flow diagram illustrating an image quality analysis method according to the present invention.

DETAILED DESCRIPTION OF THE PREFERRED EMBODIMENT

[0013] The following description of the preferred embodiment is merely exemplary in nature and is in no way intended to limit the invention, its application, or uses. For purposes of clarity, the same reference numbers will be used in the drawings to identify similar elements.

[0014] Figure 1 illustrates a point of presentment 10 implementing a financial transaction processing system including a real time image quality analysis system in accordance with the present invention. It is envisioned that a financial institution according to the present invention has a central location 12 with a central transaction datastore 14 and centralized business rules 16. The central location 12 promulgates central business rules 16 by daily transmitting business rules data 16A over a communications network 18, such as the Internet, to plural points of presentment. In turn, point of presentment 10 daily receives rules data 16B via data input 17 and stores it in local business rules datastore 20.

[0015] Local business rules datastore 20 may store validation characteristics for authenticating identity of parties and/or items. Validation characteristics may include routing numbers for financial institutions, account numbers for parties to transactions, one or more signatures or other biometric characteristics of individuals, and/or encryption keys, hash functions, and similar

code features relating to digital watermarks, holograms, and other item features. As further explained below, local business rules datastore 20 also define how to identify a type of document item based on image features and/or codeline data, how to extract, recognize, and utilize features from different types of documents, and how to validate and balance different types of transactions.

[0016] Transaction processor 34 inputs transaction data including images of items 30 that are scanned using imaging and scanning mechanism 32 and user input 26 provided by an input device 28. Input device 28 may be at least one of a keyboard, a mouse, a touchscreen, a microphone with speech recognition capability, and/or other input mechanisms. Transaction processor 34 generally performs the tasks of recognizing, validating and balancing the transaction. More specifically, transaction processor 34 performs the tasks of assigning a unique document identification number (DIN) to each item image, recognizing and extracting relevant data from item images, and filling fields of electronic form 22 with extracted data. As shown in Figure 2, transaction processor 34 further includes a configurable image quality analysis system 50, used to determine the validity and quality of each item image according to validation characteristics of local business rules 20. Corrections to item images and field contents may be made by a user interfacing with the application at the point of presentment or a user facilitating the transaction at a remote location using an input device 28 and/or scanning mechanism 32. Transaction processor 34 balances the complete cash and/or check transaction and sends a validation decision along with the electronic from filling results back to the user via visual screen 24. Transaction processor 34 posts data stored in local transaction datastore 40 which is then available for communication to central transaction datastore 14 upon receipt of input 26 command to post.

[0017] Figure 2 illustrates the function of configurable image quality analysis system 50 of transaction processor 34 in accordance with the present invention. As can be appreciated, image quality analysis system 50 can be configured to validate item images other than item images of a financial transaction. An input 52 is receptive of item image 54 and user input 56. User input 56 is adapted to configure the system to perform quality tests on item

image 54 according to local business rules 20 which may include institution specific requirements, as well as federally-mandated requirements for item truncation. An output 58 is adapted to provide quality report data 60 and edited images 62 that are viewable by the user and that may be stored in local transaction datastore 40. Workflow module 64 configures and dictates how and when image quality analysis is performed via user input 56. Workflow module 64 can be adapted to validate a single image, a group of images, or a specific subset of images according to configurable tests and parameters. Workflow module 64 can also be adapted to schedule the performance of image quality analysis tests for a sender before transmittal to central location 12 or by a receiver after transmittal to central location 12. Workflow module 64 can also be adapted to configure how images are displayed and modified during review mode processing. Parameters such as zoom percentage, rotation of item image, display mode (i.e. single view, duplex view, or multiple view), display interval in seconds, display header, display unchecked, accepted, suspected, rejected or all images, and delete specific images can be configured via user input 56.

[0018] Image usability module 66 configures and extracts usability test fields from item image 54 via user input 56. Usability test fields may be defined as test areas on a check document such as date, payee, courtesy amount, legal amount, signature, payor name and address, magnetic ink character recognition (MICR) line, memo line, payor bank and address, payee endorsement, institution of first deposit endorsement and/or transit endorsement. For example, certain field data may not be available if the item is not properly scanned, e.g. upside down or backwards. Image usability module 66 tests to determine whether the selected usability test field is present and reports an acceptance state of true or false based upon its existences.

[0019] Data and image integrity module 68 establishes the validity of data extracted from item image 54 to assure they are for the same item. Data and image integrity module 68 validates visual data on item image 54 against validation characteristics stored in datastore and determines a validation state based thereon. For example, visible MICR codeline can be validated against stored MICR codeline data. The validation tests can be configured via user input

56. For example, a user might enter input according to how many digits of codeline data must match to return a positive or negative match. Data and image integrity module reports validity decisions to the user via data output 58.

[0020] Image quality module 70 employs image analysis techniques to determine a quality image. Image quality module 70 inputs user input 56 and item image 54. User input 56 is adapted to configure parameters of any number of quality tests. Quality tests are performed on item image 54. Quality tests include, but are not limited to, partial image test, excessive skew test, piggyback item test, too light or too dark test, streaks or bands test, exceed minimum size test, and exceed maximum size test. Partial image test detects and reports if only part of an expected item image 54 is present. Excessive skew detects and reports item image 54 exceeds allowable skew parameters. Piggyback item test detects the presence of more than one item image for an image 54. Too light or too dark tests detect images outside of the allowable parameters for lightness of darkness of item image 54. Streaks or bands test detects foreign image content preventing recognition of the item image information. Exceeds size test validates that the storage size of the item image 54 is within the minimum and maximum allowable parameters. A data output is adapted to report results of each test performed. Tests and test parameters may be established by promulgated central business rules 16 and/or local business rules 20.

[0021] Edit image module 72 performs detection and editing based on reported flaws from image usability module 66 data and image integrity module 68, image quality module 70, and user input 56. Edit module 72 functions include, but are not limited to, deskewing, filtering (removing speckles and hole punches), cropping, rotating, annotating, framing, scaling, and image format conversion. Each edit function has associated configurable parameters that define the edit to be performed on item image 54. Edit image module 72 outputs an edited image 62 and report data 60 according to parameters configured in workflow module 64.

[0022] The preferred embodiment of the system of the present invention having now been described in detail, attention is now directed to the method according to the present invention as illustrated in Figure 3. Figure 3

illustrates a method of performing image quality analysis on an item. Accordingly, at step 100, a job profile is configured. The user configures parameters associated with the workflow, image usability, data and image integrity, image quality, and edit functions. The parameters are saved as a job profile. Image quality analysis is then scheduled to occur according to the workflow specified in the job profile. At step 102, an image is created using scanning mechanism 32. A single item or a batch of items may be processed according to the job profile. At step 104, image quality tests configured in the job profile to run are performed. A single test may be performed or a number of tests may be performed simultaneously before output is displayed to the screen. At step 106, item image 54 is output from the image quality module 70 and is available for post-test editing, if necessary. At step 108, inferior quality item images can be edited to provide a satisfactory quality image via pre-configured edit commands or commands entered by the user. If all scheduled quality tests are complete, at step 110, the validated image and extracted image data are stored in local transaction datastore 40 at step 112. At step 114, the process continues until each item of the batch has been tested.

[0023] Those skilled in the art can now appreciate from the foregoing description that the broad teachings of the present invention can be implemented in a variety of forms. Therefore, while this invention has been described in connection with particular examples thereof, the true scope of the invention should not be so limited since other modifications will become apparent to the skilled practitioner upon a study of the drawings, the specification and the following claims.

CLAIMS

What is claimed is:

1. A configurable image quality analysis system for use at a point of presentment, comprising:

an input receptive of an image of a physical item at least partially embodying a financial transaction;

an image quality module adapted to perform a plurality of image quality tests on the image according to a plurality of configurable test parameters to identify a poor quality image;

an edit module adapted to perform at least one edit on the poor quality image to generate an edited image; and

an output adapted to report at least one of the edited images and a report of results from the plurality of quality tests of the image quality module and the edit module.

2. The system of claim 1, wherein the edited image is stored in a transaction datastore.

3. The system of claim 1, wherein the report is stored in a transaction datastore.

4. The system of claim 1, further comprising a workflow module adapted to sequence the plurality of image quality tests.

5. The system of claim 4, wherein the workflow module is further adapted to configure an image display parameter.

6. The system of claim 1, further comprising an image usability module adapted to configure and extract a test field from the image, and wherein the usability test fields are used to determine an acceptance state based upon the presence of the test field on the image.

7. The system of claim 6, further comprising a data and image integrity module adapted to determine a validation state based upon a comparison of visual data extracted from the image with a validation characteristic.

8. The system of claim 7, wherein the data and image integrity module is further adapted to retrieve the validation characteristics from a datastore.

9. The system of claim 1, wherein the image quality module performs at least one image test function selected from the group consisting of a partial image test, excessive skew test, piggyback image test, too light test, too dark test, streaks test, bands test, exceeds minimum size test and maximum size test.

10. The system of claim 1, wherein the edit module performs at least one image edit function selected from the group consisting of border detection, filtering, cropping, rotation, annotation, framing, scaling, and image conversion.

11. A method of performing image quality analysis on an item of a financial transaction, comprising:

retrieving a job profile from a datastore, wherein the job profile includes a set of document identifiers and a set of image quality test parameters;

generating an image record of a physical item;

reading an item image according to the set of document identifiers;

performing an image quality test based on the set of quality test parameters of the job profile to determine an image quality state;

editing the flawed image based on the image quality state and the set of edit parameters of the job profile to create a corrected image record; and

posting the image quality test results and the corrected image record to a screen for viewing.

12. The method of claim 11, further comprising configuring a workflow parameter to sequence execution of the at least one imagine quality test.

13. The method of claim 12, further comprising configuring work flow parameters to display the image quality test results and the corrected image record.

14. The method of claim 11, further comprising posting the image quality test results and the corrected image record to a transaction datastore.

15. The method of claim 11, further comprising determining an acceptance state based the presence of a usability test field in the image record.

16. The method of claim 15 wherein the acceptance state is retrieved from a datastore.

17. The method of claim 10, further comprising determining validation state based on a comparison of visual data extracted from the item image with a validation characteristic.

18. The method of claim 17 wherein the validation characteristic is retrieved from a datastore.

19. The method of claim 11, wherein performing at least one image quality test includes at least one test selected from the group consisting of partial image test, excessive skew test, piggyback image test, too light test, too dark test, streaks test, bands test, exceeds minimum size test and maximum size test.

20. The method of claim 11, editing the flared image includes at least one editing function selected from the group consisting of deskewing, adding annotation, framing, scaling, and converting the flawed image.

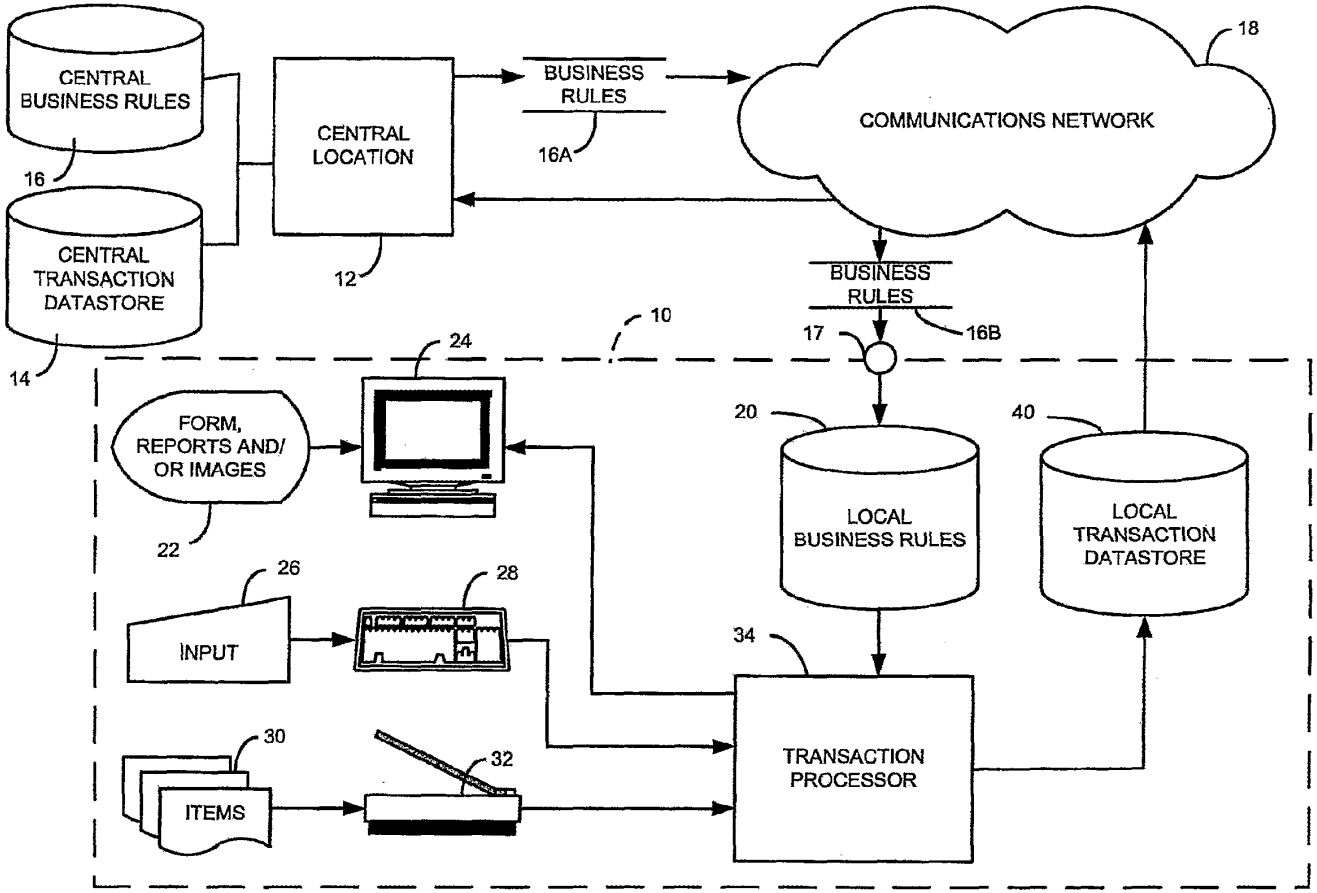
CENTRAL BUSINESS RULES
16
CENTRAL TRANSACTION DATASTORE
14
CENTRAL LOCATION
12
BUSINESS RULES
16A
COMMUNICATIONS NETWORK
18
BUSINESS RULES
16B
17
10
24
FORM, REPORTS AND/ OR IMAGES
22
20
LOCAL BUSINESS RULES
40
LOCAL TRANSACTION DATASTORE
26
INPUT
28
34
30
ITEMS
32
TRANSACTION PROCESSOR

Figure 1

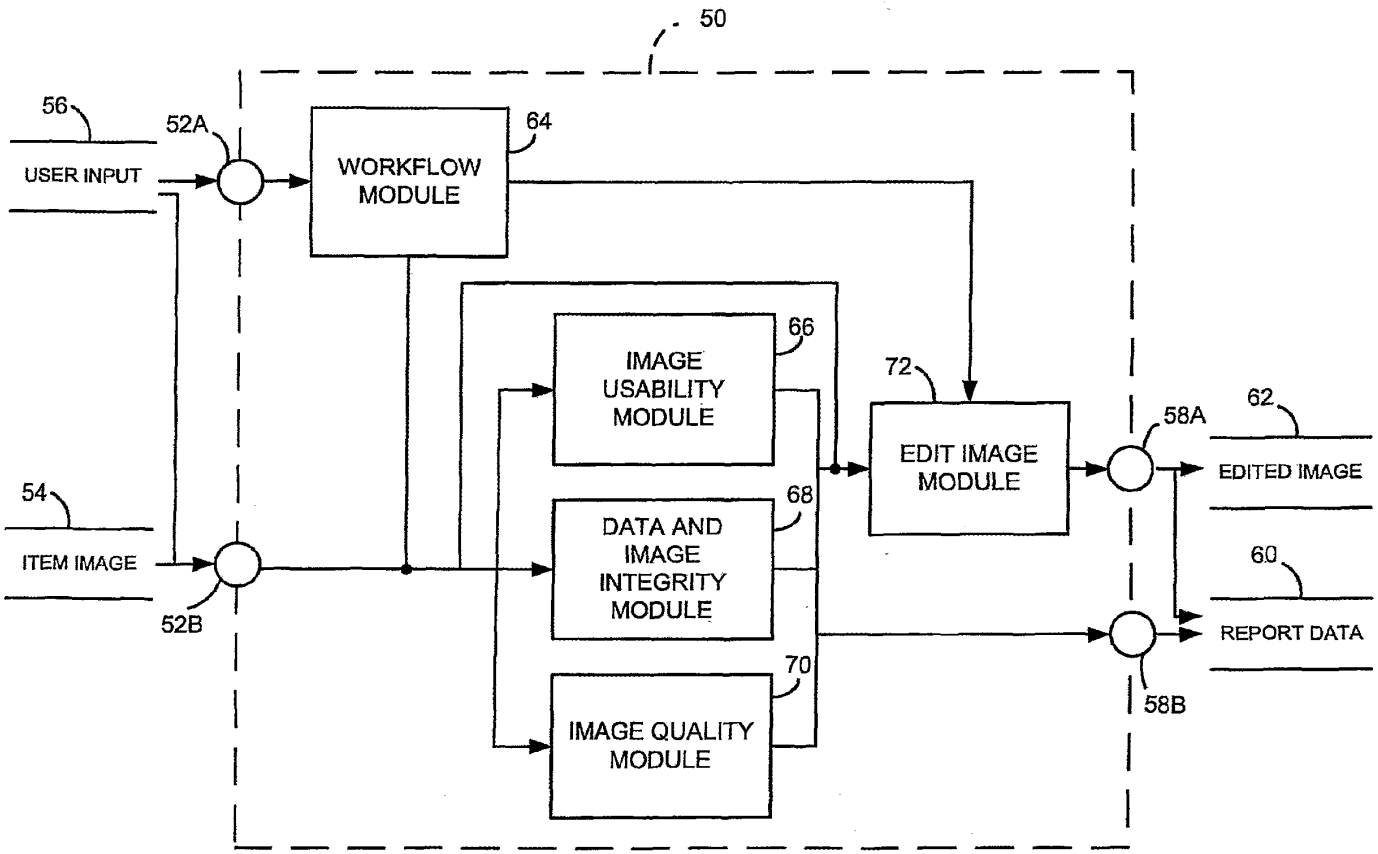
50
56
52A
USER INPUT
WORKFLOW MODULE
64
IMAGE USABILITY MODULE
66
72
EDIT IMAGE MODULE
58A
62
EDITED IMAGE
54
ITEM IMAGE
52B
DATA AND IMAGE INTEGRITY MODULE
68
60
REPORT DATA
70
IMAGE QUALITY MODULE
58B

Figure 2

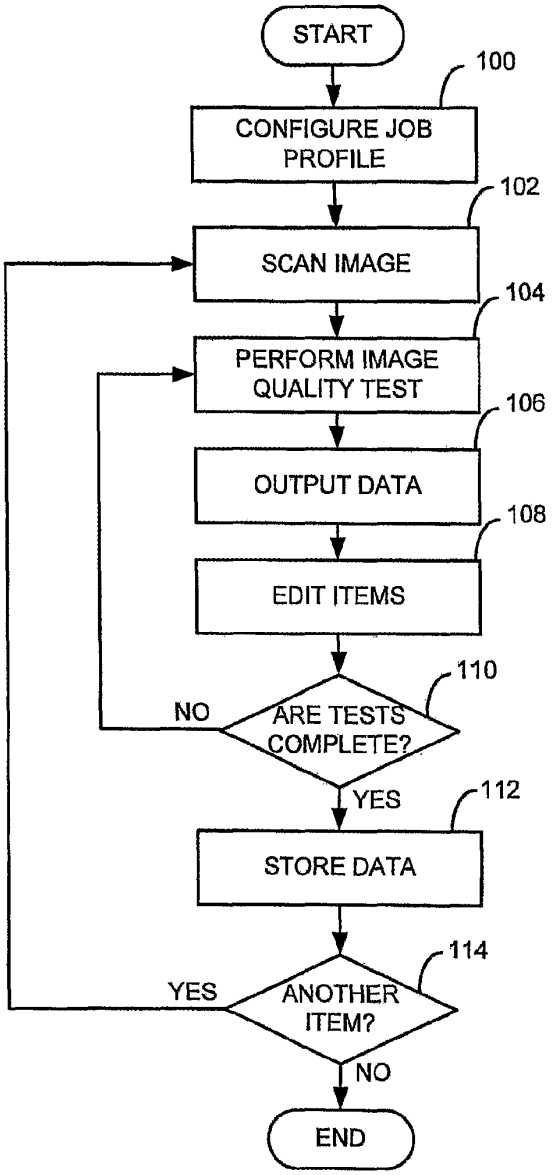
START
100
CONFIGURE JOB PROFILE
102
SCAN IMAGE
104
PERFORM IMAGE QUALITY TEST
106
OUTPUT DATA
108
EDIT ITEMS
110
ARE TESTS COMPLETE?
NO
YES
112
STORE DATA
114
ANOTHER ITEM?
YES
NO
END

Figure 3

CERTIFICATE OF EFS FILING UNDER 37 CFR §1.8

I hereby certify that this correspondence is being electronically transmitted to the United States Patent and Trademark Office, Commissioner for Patents, via the EFS pursuant to 37 CFR §1.8 on the below date:

Date: December 17, 2021 Name: Scott W. Brim (Reg. No. 51,500) Signature: /Scott W. Brim/

INFORMATION DISCLOSURE STATEMENT BY APPLICANT (Not for submission under 37 CFR 1.99)	Application Number	16/507,595
	Filing Date	July 10, 2019
	First Named Inventor	Charles Lee Oakes
	Art Unit	3697
	Confirmation Number	4037
	Examiner Name	LIU, I JUNG
	Attorney Docket No.	14538-668 (US-0152.11)

In accordance with the duty of disclosure, Applicant(s) hereby cites the following references:

US PATENT REFERENCES

EXAMINER INITIAL		DOCUMENT NUMBER Number-Kind Code (if known)	DATE	NAME
	1	US 5,903,904 A	05/11/1999	Mark Peairs
	2	US 6,315,195 B1	11/13/2001	N. Ramachandran
	3	US 2003/0051138	03/13/2003	Fukiko Maeda et al.
	4	US 2003/0097592	05/22/2003	K. Adusumilli
	5	US 2003/0200107	10/23/2003	Jeffrey L. Allen et al.
	6	US 2003/0213841	11/20/2003	Stanley M. Josephson et al.
	7	US 6,668,372	12/23/2003	Youfeng Wu
	8	US 2004/0202349 A1	10/14/2004	Berna Erol et al.
	9	US 2005/0015341 A1	01/20/2005	Walter C. Jackson
	10	US 2005/0198364	09/08/2005	David del Val et al.
	11	US 2005/0216409 A1	09/29/2005	Patrick S. McMonagle et al.
	12	US 2005/0281450	12/22/2005	Joseph L.Richardson
	13	US 2006/0071950	04/06/2006	Raymond C. Kurzweil et al.
	14	US 2006/0112013	05/25/2006	Rian R. Maloney
	15	US 2006/0186194	08/24/2006	Joseph L. Richardson
	16	US 2007/0030363 A1	02/08/2007	Stephen Philip Cheatle et al.
	17	US 2007/0116364 A1	05/24/2007	Richard P. Kleihorst et al.
	18	US 2007/0118747	05/24/2007	Leon Pintsov et al.
	19	US 2010/0016016 A1	01/21/2010	Trent Brundage et al.
	20	US 8,531,518 B1	09/10/2013	Asaf Zomet
	21	US 8,582,862 B2	11/12/2013	Grigori Nepomniachtchi et al.
	22	US 2014/0197922 A1	07/17/2014	Kenneth Stanwood et al.
	23	US 8,929,640 B1	01/06/2015	Douglas U. Mennie et al.
	24	US 2016/0034590 A1	02/04/2016	Mark Endras et al.
	25	US 9,270,804 B2	02/23/2016	Walter Dees et al.
	26	US 2016/0142625 A1	05/19/2016	Arnold Weksler et al.
	27	US 9,384,409 B1	07/05/2016	Wei Ming
	28	US 2016/0335816 A1	11/17/2016	Vijai Thoppae et al.
	29	US 9,613,467 B2	04/04/2017	Robert Roberts et al.
	30	US 9,613,469 B2	04/04/2017	James Fish et al.
	31	US 2017/0146602 A1	05/25/2017	Chad Samp et al.
	32	US 9,824,453 B1	11/21/2017	Stephen M. Collins et al.
	33	US 2017/0337610 A1	11/23/2017	Nicole Michelle Beguesse
	34	US 10,157,326 B2	12/18/2018	Fei Long et al.
	35	US 10,818,282 B1	10/27/2020	Harmony Jane Clauer Salyers.

Examiner Signature		Date Considered	

FOREIGN PATENT REFERENCES

EXAMINER INITIAL		DOCUMENT NUMBER Number-Kind Code (if known)	DATE	COUNTRY	TRANSLATION YES OR NO
	36	WO 96/14707 A1	05/17/1996	WIPO	--
	37	CA 2619884	03/01/2007	Canada	--
	38	WO 2007/024889	03/01/2007	WIPO	--

OTHER ART – NON PATENT LITERATURE DOCUMENTS

EXAMINER INITIAL		Include name of author, title of the article (when appropriate), title of the item (book, magazine, journal, serial, symposium, catalog, etc.), date, page(s), volume-issue number(s), publisher, city and/or country where published.
	39	Fletcher, Lloyd A., and Rangachar Kasturi, "A robust algorithm for text string separation from mixed text/graphics images", IEEE transactions on pattern analysis and machine intelligence 10.6 (1988), 910-918 (1988)
	40	IPR 2022-00076 filed November 17, 2021 on behalf of PNC Bank N.A., 98 pages
	41	IPR 2022-00075 filed November 5, 2021 on behalf of PNC Bank N.A., 90 pages
	42	IPR 2022-00050 filed October 22, 2021 on behalf of PNC Bank N.A., 126 pages
	43	IPR 2022-00049 filed October 22, 2021 on behalf of PNC Bank N.A., 70 pages
	44	*About Network Servers,* GlobalSpec (retrieved from https://web.archive.org/web/20051019130842/http://globalspec.com 80/LearnMore/Networking_Communication_Equipment/Networking_Equipment/Network_Servers ("GlobalSpec")
	45	FDIC: Check Clearing for the 21st Century act (Check21), FED. Deposit Ins. Corp., April 25, 2016 (retrieved from https://web.archive.org/web/20161005124304/https://www.fdic.gov/consumers/assistance/protection/check21.html ("FDIC")

1. PRIORITY INFORMATION:

☒ This application claims priority under 35 USC §120 to the following United States patent application(s): 16/165,622, 16/025,679, 15/663,284, 14/225,090 and 11/590,974. In accordance with 37 CFR §1.98(d), copies of the references cited herein which were submitted to, or cited by, the office, in compliance with 37 CFR §1.98(a)-(c) in the earlier application are not provided herewith. The Examiner is directed to those references cited in all Information Disclosure Statements filed in the priority United States patent application(s) cited above in addition to the references cited herein.

2. CERTIFICATIONS: (CHECK ALL THAT APPLY)

A. <u>Certifications For 37 CFR §1.97(c) or 37 CFR §1.97(d):</u>

☐ Applicant hereby certifies pursuant to 37 CFR §1.97(e)(1) that each item of information in this Information Disclosure Statement was first cited in any communication from a foreign patent office in a counterpart foreign application not more than three months prior to the filing of this Information Disclosure Statement.

☒ Applicant hereby certifies pursuant to 37 CFR §1.97(e)(2) that no item of information contained in this Information Disclosure Statement was cited in a communication from a foreign patent office in a counterpart foreign application, and, to the knowledge of the undersigned after making reasonable inquiry, no item of information contained in this Statement was known to any individual designated in 37 CFR §1.56(c), more than three months prior to the filing of this Information Disclosure Statement.

Examiner Signature		Date Considered	

B. For Patent Term Adjustment Purposes:

☐ For purposes of 37 CFR §1.704(d)(i) or 37 CFR §1.704(d)(ii), Applicant is hereby submitting concurrently with this Information Disclosure Statement a completed Form PTO/SB/133 that certifies that each item of information contained in this Information Disclosure Statement was first cited in any communication from a patent office in a counterpart foreign or international application or from the Office or is a communication that was issued by a patent office in a counterpart foreign or international application or by the Office, and that this communication was not received by any individual designated in 37 CFR §1.56(c) more than thirty days prior to the filing of this Information Disclosure Statement.

3. FEE INFORMATION: (CHECK IF FEE REQUIRED)

☐ Applicant has calculated a processing fee in the amount of $0 to be due under 37 CFR §1.17(p) in connection with the filing of this Information Disclosure Statement. Applicant authorizes charging the fee to our Stored Payment Method as selected in Financial Manager.

☒ The Director is hereby authorized to charge any fee deficiency associated with the filing of this Information Disclosure Statement to Deposit Account 50-4184

Pursuant to the undersigned attorney's obligation and duties under 37 CFR §§ 1.56 and 1.98(a)(3) and (c), either English language abstracts, partial translations, or full translations are included for patent documents which are not in English for the express purpose of providing a concise explanation of the references to the Patent and Trademark Office with the opportunity to evaluate the same. Applicant respectfully requests the Examiner's consideration of the above reference(s) and entry thereof into the record of this application.

By submitting this Statement, Applicant is attempting to fully comply with the duty of candor and good faith mandated by 37 CFR §1.56. As such, this Statement is not intended to constitute an admission that any of the enclosed references, or other information referred to therein, constitutes "prior art" or is otherwise "material to patentability," as that phrase is defined in 37 CFR §1.56(a).

Respectfully submitted,

December 17, 2021
Date

/Scott W. Brim/
Scott W. Brim (Reg. No. 51,500)

Examiner Signature		Date Considered	

Electronic Acknowledgement Receipt

EFS ID:	44545598
Application Number:	16507595
International Application Number:	
Confirmation Number:	4037
Title of Invention:	DIGITAL CAMERA PROCESSING SYSTEM
First Named Inventor/Applicant Name:	Charles Lee Oakes
Customer Number:	16530
Filer:	Scott Wayne Brim/Michael Agustin
Filer Authorized By:	Scott Wayne Brim
Attorney Docket Number:	US-0152.11(14538-668)
Receipt Date:	17-DEC-2021
Filing Date:	10-JUL-2019
Time Stamp:	13:44:39
Application Type:	Utility under 35 USC 111(a)

Payment information:

Submitted with Payment	no

File Listing:

Document Number	Document Description	File Name	File Size(Bytes)/ Message Digest	Multi Part /.zip	Pages (if appl.)
1	Transmittal Letter	14538-668_Transmittal.pdf	111254 edd463816cd75e85c695beece5a9573e80a45d9c	no	1

Warnings:

Information:					
2	Information Disclosure Statement (IDS) Form (SB08)	14538-668_IDS.pdf	130246 7932ef434eccc15d368c3760abd2f70b560d4625	no	3
Warnings:					
Information:					
This is not an USPTO supplied IDS fillable form					
3	Foreign Reference	36_WO9614707_.pdf	10769437 93ce611ecff34df74a58479007c6203a07a483a7	no	133
Warnings:					
Information:					
4	Foreign Reference	37_CA2619884_.pdf	2104161 5585ff508bd1c4cc895bfede6b086880e9993218	no	18
Warnings:					
Information:					
5	Foreign Reference	38_WO07024889_.pdf	1578906 be69b410842d00a6ae4ff6fbc5ff614e33afb36c	no	15
Warnings:					
Information:					
6	Non Patent Literature	39_Fletcher_Alan_.pdf	1957169 75284599523ad1693103cb5c60d7e7389c3e094b	no	9
Warnings:					
Information:					
7	Other Reference-Patent/App/Search documents	40_IPR2022-00076_.pdf	13151152 1a60206d5729b140863fc5f431a78da2212badfd	no	98
Warnings:					
Information:					
8	Other Reference-Patent/App/Search documents	41_IPR2022-00075_Petition_.pdf	11624385 a6a017540d8071de6a5f0c52cd8aa934d0a788af	no	90
Warnings:					
Information:					

9	Other Reference-Patent/App/Search documents	42_IPR2022-00050_Petition_.pdf	14147498 3e1254dccfcce41d8ffdb5e6b2f9f4de249a1dcf	no	126
Warnings:					
Information:					
10	Other Reference-Patent/App/Search documents	43_IPR2022-00049_Petition_.pdf	15006373 19d8ba4fc3e37623d79ac233b3fbccb87b78f7b1	no	70
Warnings:					
Information:					
11	Non Patent Literature	44_GlobalSpec_.pdf	1885489 bb796956f46625a92ed767f66b92f720c0206e84	no	2
Warnings:					
Information:					
12	Non Patent Literature	45_FDIC_Check21_.pdf	800012 7842fc9c32043d2c69d13700af15f3d2db3c8300	no	1
Warnings:					
Information:					
			Total Files Size (in bytes):	73266082	

This Acknowledgement Receipt evidences receipt on the noted date by the USPTO of the indicated documents, characterized by the applicant, and including page counts, where applicable. It serves as evidence of receipt similar to a Post Card, as described in MPEP 503.

<u>New Applications Under 35 U.S.C. 111</u>
If a new application is being filed and the application includes the necessary components for a filing date (see 37 CFR 1.53(b)-(d) and MPEP 506), a Filing Receipt (37 CFR 1.54) will be issued in due course and the date shown on this Acknowledgement Receipt will establish the filing date of the application.
<u>National Stage of an International Application under 35 U.S.C. 371</u>
If a timely submission to enter the national stage of an international application is compliant with the conditions of 35 U.S.C. 371 and other applicable requirements a Form PCT/DO/EO/903 indicating acceptance of the application as a national stage submission under 35 U.S.C. 371 will be issued in addition to the Filing Receipt, in due course.
<u>New International Application Filed with the USPTO as a Receiving Office</u>
If a new international application is being filed and the international application includes the necessary components for an international filing date (see PCT Article 11 and MPEP 1810), a Notification of the International Application Number and of the International Filing Date (Form PCT/RO/105) will be issued in due course, subject to prescriptions concerning national security, and the date shown on this Acknowledgement Receipt will establish the international filing date of the application.

crowell moring

CERTIFICATE OF EFS FILING UNDER 37 CFR §1.8

I hereby certify that this correspondence is being electronically transmitted to the United States Patent and Trademark Office, Commissioner for Patents, via the EFS pursuant to 37 CFR §1.8 on the below date:

Date: December 17, 2021 Name: Scott W. Brim (Reg. No. 51,500) Signature: /Scott W. Brim/

IN THE UNITED STATES PATENT AND TRADEMARK OFFICE

In re Appln. of:	Charles Lee Oakes		
Appln. No.:	16/507,595	Examiner:	LIU, I JUNG
Filed:	July 10, 2019	Art Unit:	3697
For:	DIGITAL CAMERA PROCESSING SYSTEM	Conf. No.:	4037
Attorney Docket No.:	14538-668 (US-0152.11)		

TRANSMITTAL

Commissioner for Patents
PO Box 1450
Alexandria, VA 22313-1450

Sir:

Attached is/are:

☒ Information Disclosure Statement (and references).

Fee calculation:

☒ No additional fee is required.

☐ Per 37 CFR §1.27, ☐ Applicant is small entity ☐ Applicant is micro entity.

☐ An extension fee in an amount of $_____ for a _____-month extension of time under 37 CFR § 1.136(a).

☐ A petition or processing fee in an amount of $_____ under 37 CFR § 1.1_____(_____).

☐ An additional filing fee has been calculated as shown below:

					Fee		Small Entity Fee		Micro Entity Fee	
	Claims Remaining After Amendment		Highest No. Previously Paid	Present Extra	Rate	Add'l Fee	Rate	Add'l Fee	Rate	Add'l Fee
Total		Minus			x $100 =	$	x $ 50 =	$	x $25 =	$
Independent		Minus			x $480 =	$	x $240 =	$	x $120 =	$
First Presentation of Multiple Dep. Claim					+ $860 =	$	+ $430 =	$	+ $215 =	$
					Total	$	Total	$	Total	$

Fee payment:

☐ Please charge our Stored Payment Method as selected in Financial Manager in the amount of $_____ for _____.

☒ The Director is hereby authorized to charge payment of any additional filing fees required under 37 CFR § 1.16 and any patent application processing fees under 37 CFR § 1.17 (including any extension fee required to ensure that this paper is timely filed), or to credit any overpayment, to Deposit Account No. 50-4184.

Respectfully submitted,

December 17, 2021
Date

/Scott W. Brim/
Scott W. Brim (Reg. No. 51,500)

(19) Europäisches Patentamt
European Patent Office
Office européen des brevets

(11) EP 0 984 410 A1

(12) **EUROPEAN PATENT APPLICATION**

(43) Date of publication:
08.03.2000 Bulletin 2000/10

(51) Int. Cl.[7]: **G07F 19/00**, G07F 7/10, G06F 17/60

(21) Application number: **99202212.9**

(22) Date of filing: **07.07.1999**

(84) Designated Contracting States:
AT BE CH CY DE DK ES FI FR GB GR IE IT LI LU MC NL PT SE
Designated Extension States:
AL LT LV MK RO SI

(30) Priority: **07.07.1998 US 92486 P**
07.07.1998 US 92487 P

(71) Applicants:
- **CITIBANK, N.A.**
  New York, New York 10043 (US)
- **Citicorp Development Center, Inc.**
  Los Angeles, California 90066 (US)

(72) Inventors:
- **Slater, Alan**
  East Brunswick, New Jersey 08816 (US)
- **Sears Michael L.**
  Torrance, California 90503 (US)
- **Rin-Rin Hsu, Phoebe**
  Northridge, California 91326 (US)
- **Do D. Cuong**
  Reseda, California 91335 (US)
- **McSharry H. Patrick**
  Los Angeles, California 90056 (US)
- **Dudasik Edward M.R.**
  West Hills, California 91304 (US)
- **Gryte Stephen M.**
  Los Angeles, Clifornia 90066 (US)
- **Brooks, Robert O.(Bob)**
  Los Angeles, California 90056 (US)

(74) Representative: **Hynell, Magnus**
Hynell Patenttjänst AB,
Patron Carls väg 2
683 40 Hagfors/Uddeholm (SE)

(54) **System and method for image depositing, image presentment and deposit taking in a commercial environment**

(57) A method and system provides for scanning a check and/or cash to create an electronic image of the front and the back of the check and/or cash. The image is then processed and transmitted electronically to a central location. The image may be recreated into a paper form at the central location, resembling the original paper check or cash. Paperless processing of checks and cash is thus provided, including local voiding and storage of the check without requiring immediate pickup, while still allowing the transaction to be process.

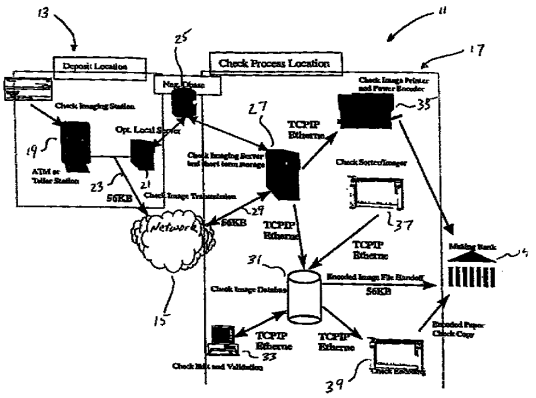

Fig. 1

EP 0 984 410 A1

Description

Cross-Reference to Related Applications

[0001] This application claims priority to Provisional Applications Nos. 60/092,486 and 60/092,487, both filed July 7, 1998, the disclosures of which are specifically incorporated by reference herein.

Field of the Invention

[0002] In one aspect, the present invention relates to the transfer and handling of printed checks and/or cash using electronic representations of the checks and/or cash, and in particular to a method and system for accepting, canceling, copying, transmitting, and creating Magnetic Image Character Recognition (MICR) encoded paper facsimiles of the checks, and verifying checks in an electronic manner that allows paperless or minimal paper use processing.

[0003] In another aspect, the present invention relates to providing banking institutions with the capability to process deposits for other banks, accepting deposits at merchant locations, and accepting transactions and checks from places like brokerage offices, businesses, lock boxes, overseas locations, and bank branches and offices.

[0004] In yet still another aspect, the present invention relates to a system and method of use for implementing an image deposit system, in particular, as used in a self-service customer environment which reduces deposit processing time and costs.

Background of the Invention

[0005] Within the banking environment, checks are very heavily used as a method of payment for goods and services, and for the transfer of funds between people. One of the very significant costs that banks and businesses incur is the handling and transportation of checks between the business location and the bank, and between the depository bank and the paying bank.

[0006] More generally, the U.S. check payment system currently processes 65 billion items annually, and this number continues to grow even though various forms of electronic payments are increasing. As a result, the time to process such transactions, including crediting of deposits in customer accounts is getting greater and greater. Thus, there is a need to substitute, replace, or eliminate much of the transit or transportation costs associated with checks and to provide a method and system for paperless or minimal paper use processing.

[0007] In this context, the banking and the automatic teller machine (ATM) manufacturing industry has experimented with check image systems for a number of years with little success. Some of the reasons for the lack of success include the failure to properly design the ATM applications and hardware for a satisfying customer experience, as well as the failure to address the entire system, i.e., the depositing customer, the check payment system, the paying bank and the customer who wrote the check.

[0008] In accordance with the invention herein, the problems of the prior art, check imaging systems are avoided and a comprehensive system for imaging depositing, presentment and deposit taking in a commercial environment is provided. In part, this is possible because of existing point of sale, check acceptance devices, improvements in data bandwidth and transmission time for images available for ATM installation, and better image compression and Courtesy Account Recognition (CAR) software, all of which are commercially available, and which are implemented in the invention in a unique and novel system which overcomes a number of problems of the prior art.

Summary of the Invention

[0009] It is thus one object of the invention to provide a method and system to image check items at an ATM, collect MICR code line and other information about the check and deposit account, and transmit the image and data directly to an image capable for processing. Because the image can be substituted into the check processing system, pickup of the physical items can be delayed or eliminated, resulting in large cost savings and improvements in payment settlement time.

[0010] It is another object of the present invention to overcome the problems of the prior art by providing a method and system for copying and transferring checks electronically and then creating an MICR encoded paper facsimile of the check or using another paperless method to enter the check into the check collection system.

[0011] It is a further object of the present invention to accept and cancel a paper check, including providing a method for reproducing a check that has been scanned.

[0012] Yet still further, it is an object of the present invention to verify checks in an electronic or other paperless manner.

[0013] It is a further object of the invention to provide a paperless method to enter a check into the check collection system, accept deposits of one bank for other banks, accept deposits at merchant locations, and accept transactions and checks from places like brokerage offices, businesses, lock boxes, overseas locations, and bank branches and offices.

[0014] It is still another object to accept and cancel a paper check, to provide a method for reproducing a check that has been scanned, and to verify checks in an electronic or other paperless manner.

[0015] A still further object is to provide the capabilities discussed previously for cash transactions.

[0016] One embodiment of the present invention solves the problems of the prior art by scanning a check

to create an electronic image of the front and back of the check, and then processing and transmitting the scanned check electronically to a central location. The electronic image is recreated into a paper form resembling the original paper check, and the paper form is MICR encoded. In another embodiment, paperless transactions for checks is accomplished, and variability between paper and paperless check processing is possible in order to enable bank evolution to paperless transactions. Optionally, the check is presented in an electronic access location, such as an automatic teller machine (ATM), a customer access terminal (CAT), or other check scanning depository terminal connected to a network. The same can be done with cash.

[0017] Yet still another embodiment provides for scanning a check to create an electronic image of the front and back of the check, and transmitting the scanned check electronically to a central location of one bank, accepting deposits at merchant locations, accepting deposits of one bank for another, and accepting transactions and checks from places like brokerage offices, businesses, lock boxes, overseas locations, and bank branches and offices. In one embodiment, the electronic image is recreated into a paper form resembling the original paper check, and the paper form is MICR encoded. While the invention is generally described in terms of being implemented with instruments such as checks, it is possible to allow similar processing of cash transactions where the cash note is scanned in and held in a secure location, while appropriately prepared images of the scanned note are used to process the transaction electronically.

[0018] Thus, in one specific aspect, the invention relates to a method for image based transactions. An instrument or cash is received at a first location, with the instrument or cash having a front face and a back face. The front face and the back face of the instrument or cash are scanned to create a deposited instrument or deposited cash. The scanned deposited instrument or cash is transmitted from the first location to a second location and a transaction is then processed with the scanned deposited instrument or cash.

[0019] In another aspect, the invention relates to a system for conducting image based transactions. A scanner is provided at a first location which is configured for scanning the front face and the back face of either an instrument or cash, for creating a deposited instrument or deposited cash. Means are provided for transmitting the scanned deposited instrument or cash from the first location to a second location. Such means can include conventional existing transmission technology such as is used in a network environment including a public network such as the Internet, and involves commercially available and well-known electronic, computer and software tools. Means for receiving the transmitted scanned deposited instrument is provided at the second location. Such devices used for receiving are conventional, commercially available, and well-known to those of ordinary skill in the art. At the second location, there is provided means for processing a transaction with the scanned deposited instrument or cash. Such means can also involve conventional computer technology and database technologies for allowing processing of the transaction in a desired manner.

Brief Description of the Drawings

[0020] Having briefly described the invention, the same will become better understood from the following detailed discussion thereof, made with reference to the appended drawings, wherein:

Figure 1 is a block diagram of a high-level system architecture showing instrument, in particular, check imaging process flow as implemented in accordance with the system of the invention;

Figure 2 is a more detailed block diagram showing the various components implemented in the system of the invention, which is more generally illustrated in Fig. 1;

Figure 3 is a block diagram illustrating MICR encoded facsimile presentment;

Figure 4 is a block diagram illustrating local scanned image presentment to local banks;

Figure 5 is a block diagram illustrating scanned image presentment and shared deposit taken to local and nonlocal banks;

Figure 6 is a block diagram illustrating presentment in various forms to accommodate the paying bank requirements;

Figure 7 is a block diagram illustrating scanned image presentment in combination with merchant deposit taking, lock box, and other forms;

Figure 8 is a flow diagram illustrating the image deposit flow when the initial scan is implemented at an ATM;

Figure 9 is a flow diagram illustrating image deposit flow when the initial scan occurs at a teller station; and

Figure 10 is a flow diagram illustrating what occurs after image depositing at the back office check processing center.

Figure 11 illustrates an original check and an MICR image.

Detailed Discussion of the Invention

[0021] A general system overview of the invention is shown in Fig. 1 as system 11. Fig. 1 generally shows a deposit location 13 connected through a network 15, or directly, to a database 25 and to a check processing location 17. The deposit location 13 includes a check imaging station which can be an ATM or teller station 19 which is used to scan in the check, and either transmit it through a connection 23 to the network, which then in turn connects to a check imaging server 27 providing

short term storage at the check process location 17, or transmits to an optional local server 21 connected to a negative (fraud and loss detection) database 25, which transmits the check image to the check imaging server 27. The check image can then be transmitted to a check image database 31 connected to the server 27 for manipulation at a terminal 33. At the terminal 33 check editing and validation can be conducted. Similarly, a check encoder 39 can serve to encode the check or alternatively the check can be encoded automatically based upon the scanned image, and generate a paper check copy for transmission to a making bank 41. A check printer 35 is connected to the server 27 from where check images can be printed and transmitted to the making bank 41. Similarly, a check sorter/imager 37 can be connected to the image database 31 for providing appropriate sorting functionality.

[0022] Certain aspects of the system of Fig. 1 are further illustrated in greater detail in Figure 2. For instance, an alternative to an ATM can be a customer access terminal (CAT) 101 which can be the deposit location 13 at the remote banking center. The CAT 101 will have a scanner or check imager in place of a traditional envelope deposit slot as currently used in automatic teller machines. In addition, the CAT will also include a cash acceptor as well as a cash dispenser to provide functionality similar to automatic teller machines currently in use. Thus, in accordance with its use, the CAT 101 is configured to accept check or cash deposit items with no envelope. Two separate cash and check entry points may be used, but alternatively, a single entry point scanner can be used as may be readily apparent to those of ordinary skill in the art.

[0023] The CAT can be programmed to validate check items through MICR code line and OCR software. When a check is scanned in, an image of each check is presented on the customer display. The customer can then, using an appropriate keyboard and Courtesy Amount Recognition Software (CAR), input the check amount. A comparison between the scanned amount and the entered amount is made, and if there is a match, the transaction proceeds. If the customer's input and the courtesy amount recognition differ, even after a customer's second input, the system will send the check image to a customer service operator who will be able to read the check and resolve any discrepancies.

[0024] A printer within the CAT 101 serves to print a transaction record with an image of selected elements of the check. The CAT 101 then compiles deposit information such as the deposit account number, check courtesy amount, MICR code line data, cash deposit details, and the total deposit amount to produce a facsimile of a deposit slip for a check processing center. The CAT is programmed to compress, encrypt and digitally sign the check image for transmission to a secure processing center through a connection 23 to a network 15, which in turn connects through a connection 29 to the check processing center 11.

[0025] Alternatively, the deposit location 13 can be a bank which can include teller work stations 103, including scanners and/or a CAT 101 as previously described. Such a deposit location 13 would also be connected through a connection 23 to a network 15 and/or a connection 29 to the check processing center 11.

[0026] As discussed with respect to Fig. 1, certain common elements are interconnected as shown in greater detail in Fig. 2. Optionally, the image server 27 is connected to a printer server 28 which serves to control the check image printer 35, in this case a MICR laser printer. As the check images are printed, a single sheet of the check images is provided to a sheet cutter 36 for cutting the individual check images which are then provided to a reader/sorter 37 which is connected to a central envelope processing unit 38 for what is then normal check processing flow with the images, which would ordinarily have been done with the original checks after pickup from the deposit locations 13.

[0027] Thus, as may be appreciated, in an embodiment of the present invention, a device scans the check to create an electronic image of the front and the back of the check, and then processes and transmits the scanned check electronically to a central location. Based upon the payor bank information transmitted to the central location, the payor bank's desired method of payment is determined. The depository bank sends out the instrument for collection as either an ACH item, and ECP entry, a scanned image or a paper item. The electronic image is recreated into a paper form resembling the original paper check, and the paper form is MICR encoded. In accordance with the system, a check can be scanned and subsequently presented locally (in the same region as the payor or bank), which reduces the flow from the Federal Reserve system resulting from the transportation of checks between clearing houses and branches of the Federal Reserve regional check processing centers.

[0028] Thus, when a customer uses the system, with an ATM/CAT, the customer who desires to deposit a check follows the following procedure. The customer accesses an electronic access device, such as in an ATM/CAT, by for example, swiping a user card. The access device queries the customer as to whether the customer wants to make a deposit, and the customer indicates affirmatively that he wishes to make such a deposit. The access device then provides an instruction to the customer to input the check or cash into a slot. The front and the back of the check are then scanned, and an image of the check is presented to the customer. A courtesy amount recognition, i.e., an electronic reading of the amount the customer has written on the check, is then made using readily available software, and the customer is asked to enter the amount of the check, for example, through a keyboard or keypad. If the amount determined by the access device and the amount entered by the customer are the same, the access device accepts the deposit. If the amounts are

different, the customer re-enters the number. If the amounts still disagree, in an embodiment of the present invention, the ATM/CAT transmits an image of the check to a customer service center, displays the check for an operator, and the operator resolves any discrepancy.

[0029] After the check has been accepted and the amounts have been determined to agree, the ATM/CAT stamps the check "VOID", or prints other appropriate language on the check to show that it is no longer negotiable, and then deposits the check into a locked depository. The voided checks are picked up periodically by a courier or by a banking institution.

[0030] There is no requirement that the voided checks must be picked up on a daily basis, because the actual checks are not needed for further banking activities as further described. Throughout the day, the ATM/CAT transmits the deposited images to a central location. From these digital images, the central location recreates the check onto paper in a format that looks similar to, or almost identical to, the original check. In an embodiment of the present invention, the processing facility MICR encodes the required information for check processing on the bottom of the check and enters the MICR encoded facsimile into the paper presentment flow by sending the reproduced facsimile to a local federal reserve check processing center to be sent subsequently to the paying banks.

[0031] This is more clearly illustrated by the block diagram of Fig. 3 in which the checks are scanned into a bank's ATM 251 and processed, as previously described, at block 253. An MICR facsimile is then generated at block 255 and the encoded facsimile is presented as paper at the local Federal Office 257 to then be sent to the paying banks 259, 261, 263.

[0032] In another embodiment of the invention, the check images, as illustrated in Fig. 4, are presented in a form in accordance with the location of the drawing bank. For example, if a check is drawn on a bank in the Houston area, the image itself would be sent directly to a facility in Houston such as the Houston Federal Office 258 to be sent subsequently to Texas banks 265. Similarly, the same could be done with the San Francisco Federal Office 258' for processing by local banks, in this case, San Francisco banks 265'. Specifically, the depository bank can send the electronic information directly to the payor bank or to another bank or service provider acting as the depository bank's representative to create the MICR encoded facsimile. In this embodiment, the time delay for the physical transportation of the piece of paper from, for example, the New York City area to San Francisco or Houston would be eliminated. Further, the availability of the funds to the depository bank from the deposited check would no longer be one or two days later, but would, in effect, be the same day or the next day. Thus, "float" is effectively minimized, and the risk associated with "float" to the Federal Reserve System is substantially reduced. As with the paper transmittal, in this embodiment, each of the clearing houses or local federal reserve bank offices that receive the check image, create a facsimile and send it out to local banks.

[0033] In another embodiment of the present invention, a system known as "shared deposit taking" is illustrated in Fig. 5. In an example of shared deposit taking, a user other than a customer of the banking institution that owns the ATM/CAT, accesses the ATM/CAT and makes a deposit in the same manner that the banking institution's own customer would make the deposit, i.e., for example, as shown at block 267 of Fig. 5. This is done from the user's access card and the banking institution discerns that the customer is the depositor of another banking institution. The banking institution for the ATM/CAT scans the deposited check, and then through a processing center or on-line network, sends the deposit record plus the image of the check to the user's bank 269. This function may be provided, for example, on a fee basis by the bank having the ATM/CAT, to the other banking institution.

[0034] In accordance with this aspect of the system, the banking institution having the ATM/CAT can have the option of not picking up deposited checks from the location every single day, and provides the ability to place ATM/CAT's in very remote locations, and still operate them economically.

[0035] In a yet still further aspect, as illustrated in Fig. 6, the paying bank can be provided with an option of how the bank would like presentment of items. For example, in another embodiment of the present invention, the processing facility that receives the check images identifies the bank and its routing transit number from the bottom of the check, looks up these numbers on a table, and determines whether the paying bank requires, for example, a paper check or an electronic check presentment (ECP) file as shown in block 271. Alternatively, a third party such as the Federal Reserve Bank or a clearinghouse could maintain the table. For purposes of this disclosure, it is noted that an ECP file is an electronic file of the MICR-band on the bottom of the check.

[0036] Another bank may want a full image file as noted at block 273, or in some cases an ACH ("Automated Clearinghouse") file as shown in block 275. As banks replace their hardware and software with higher level, more electronified processing, the present invention allows the entity maintaining the bank files to simply change the table entry to automatically change the preferred form for receiving the check. Thus, the present invention provides a method and system for transition from paper to electronics for every bank in the country.

[0037] Since the images are accepted electronically and scanned electronically, an opportunity is provided to analyze the checks at the time of deposit and determine whether various different types of fraud are being attempted. For example, the deposited checks could be compared against on-line files of "no good" checks, and certain types of counterfeits could be detected. A yet

still further feature of the invention provides that a record of the check, such as a reduced size image printout is provided on the printed receipt, to the user at the ATM/CAT or presentment location immediately upon input of the check.

[0038] In a yet still further embodiment as illustrated in block diagram form in Fig. 7, the invention provides banking institutions with the capability to process deposits for other banks, allows accepting of deposits at merchant locations, and accepting transactions and checks from places like brokerage offices, businesses, lock boxes, overseas locations, and bank branches and offices.

[0039] In this embodiment of the present invention, applications for the scanners are housed in non-automatic teller machine customer activated terminal (non-ATM/CAT) environments as shown in blocks 277 of Fig. 7. In an embodiment of the present invention, a device is provided that scans checks and places them into a locked depository. This allows the use of the device in a number of situations other than banking institutions, such as at merchant sites. A merchant can input and receive checks into the device or can accept deposits for banking institutions. Such checks are acceptable whether the checks are payable to the merchant or a deposit for the host or other banking institutions. The check images are scanned and then sent to the appropriate banking institution. In an embodiment for the lock box environments as illustrated in Fig. 7, which include commercial applications, as the checks are processed, they are scanned and automatically transmitted to a check processing facility or a processing facility for the lock box. As noted previously, other applications include locations such as brokerage offices, which take in significant numbers of checks payable to themselves or to one of their customers. Thus, transportation costs and delays in obtaining access to funds are minimized by placing one of these devices within the office itself. Such an application can also include any corporate environment where large numbers of checks are taken in, wherever the corporation has difficulty and cost associated with transporting checks.

[0040] Yet still further, another application is in the overseas collection of checks drawn on U.S. banks in U.S. Dollars. Scanning devices are placeable overseas and checks may be accepted, voided their images sent to the United States and entered into the collection system. As noted previously, in addition to processing of checks, the system can be used to process currency and a typical image deposit flow for both checks and cash at an ATM/CAT is further illustrated in Fig. 8.

[0041] Specifically, as illustrated in Fig. 8, at step 301 a customer requests a deposit. The ATM/CAT queries the customer at step 303 to determine if the deposit is a check, cash or both. Deposit instructions are provided at step 305 and if the deposit is a check, the checks are accepted at step 307 in bunch maximums of, for example, ten. The checks are scanned and verified and validated at step 309. If the verification operation does not validate the check, the check is returned at step 311 and the display at the ATM/CAT displays the reason for returning the check at step 313. If the checks are verified and validated, a check list is displayed at step 315 on the ATM/CAT display with the number and the payee, and the amount is validated by a separate entry by the customer at step 317 where a customer amount validation is entered. If the amounts match, the customer is asked to verify and accept all checks at step 321. If this is done, an image file is transmitted. Upon the next scan, a query is made as to whether all the checks have been scanned and if the answer is no, the process returns to step "A" to scan the next check from step 329. Once all checks are scanned, a summary of each is displayed at step 331 along with the total, and the customer is asked to verify the amount at step 333. If the customer verifies the amounts, the checks are canceled and so marked at step 335, and moved to the storage bin at the ATM/CAT.

[0042] Returning to step 321, if the verification fails, the check is returned at step 323 and the customer is requested at step 325 if they wish to continue. If the answer is yes, the process moves to step 329 and proceeds as described previously. If the answer is no, all the checks are returned at step 327.

[0043] Turning now to a deposit of cash as shown on the left hand of the flow diagram of Fig. 8, at step 337, a determination is made as to whether to accept the cash bunch, preferably accepted only in $100, $50 and $20 Dollar bills. The cash bills are scanned and validated at step 339 and if they do not scan correctly they are returned to the customer at step 341 with the reason for the return displayed. On the other hand, if accepted, at step 343 a deposit summary is shown and the customer is asked at step 345 to verify the deposit summary. If the customer fails to verify the deposit summary, the bundle is returned at step 347 and the transaction is reversed at step 349. If verification proceeds, the cash is moved to the storage bin at step 351 and file is sent to the back office at step 353.

[0044] In an alternative flow of the present invention, Fig. 9 shows a typical image deposit flow when a teller station is the point of deposit. Specifically at a step 401, a customer asks to deposit a check, including possibly receiving cash back, establishing both a deposit as well as a customer record. Specifically, the teller follows standard procedures at step 403. At a step 405, the checks are scanned and the teller verifies and corrects the account information, and if appropriate enters "less cash". An MICR and image file are created. If the file is complete, at step 411, the file is transmitted to the branch server as shown in Fig. 9 for various routine operations as shown. At that point at a step 413, a further query is made and if the transfer is not okay, then the unscanned check is again sent by courier at step 415. On the other hand, if this transfer is okay, the physical check is then canceled and marked at step 417 and

moved into a deposit bin at step 419 and later couriered to the back office at step 421, as convenient. The image file is transmitted in batch form at step 423 from the branch server to the back office and an acknowledgment is then received by the teller and the image is cleared from the branch server. Alternatively, the files can be transmitted throughout the day.

[0045] Figure 10 illustrates in flow diagram form the operations at the back office check processing center when an image such as a check image is received at the back office image server at a step 501. As shown therein, a number of initial operations are made before farther processing. In one instance, if certain rules are met at a step 507 which requires that the check be reproduced, a number of steps are avoided and the check is queued at a step 527, after a number of steps discussed hereafter, for reproduction from the image. Alternatively, it may be required merely that the image be reviewed visually at a step 505, in which case it is queued for visual review and then reviewed and transmitted back to the step 507, as explained hereinafter.

[0046] If all data is received at step 507, credits are posted to accounts, as well as float and delays at step 509. If it is determined it is the bank's check at step 511, the check is posted at step 513 and the image archived at step 515.

[0047] If it is another bank's check, the payor banks presentment preference is determined at step 517, as well as the routing preference at step 519. It then is transmitted as an ECP, ACH or Image, at 521, 523 or 525.

[0048] If the preference is for an MICR facsimile at 527, as described previously, a paper facsimile (MEF) is created as a paper document at 529 and sent to the local Federal or clearinghouse 533. Alternatively, it is sent direct to payor bank 535 or third party for posting its own checks and creating the paper image 537, and then forward to steps 531 or 533 as before.

[0049] Thus, as can be appreciated from the previous description, the invention encompasses three sources of check and cash deposits. Specifically, full function ATM or CAT, deposit-only self-service terminals, and branch teller assisted operations are supported by the system.

[0050] With respect to the image deposit ATM, preferably, the image capable ATM will replace traditional envelope depositor functions with a check imager/depositor and a cash acceptor. As noted previously, two separate cash and check entry points may be used, but may also be combined into one entry point for scanning. The ATM is configured to validate check items through MICR code line and OCR software as well as being capable of validating currency deposit items. A display permits presentment of the image of each check on the customer display and the machine allows the customer to input check amounts, using courtesy amount recognition software to assist as appropriate. It has the capability of printing the transaction record with image of selected elements of the check as well as compile deposit information such as deposit account number, check courtesy amount, MICR code line data, cash deposit details (number of notes of each denomination, and total cash), and total deposit amount, to produce a facsimile of a deposit slip for the check processing center. The automatic teller machine includes software to compress, encrypt and digitally sign the check for transmission to a secure processing center, and has the capability to store the deposit image and information in a recoverable manner until it has been transmitted to and acknowledge by a secure processing center.

[0051] With respect to the check scanning or accepting device, it is preferably configured to accept personal and business size checks. It is capable of capturing MICR line data per banking standards, and is able to reject items, under software control, which do not have recognizable MICR code. It preferably captures a gray scale image of both sides of the check with a spacial resolution of at least 200 dots per inch and gray scale of 256 levels (8 bits per dot). It has the capability to hold the check items in escrow until the customer and ATM software algorithms decide whether to accept the check for deposit. Rejected checks may be returned unmarked to the customer under program control. After the acceptance decision is made, programmable endorsement and cancellation information is applied on the back of the check with an inkjet printer module and ink stamps. The front of the check must be printed to indicate that the check has been voided or the check must be destroyed. The accepted check is then transported to a storage bin in the automatic teller machine. The scanner is configured to accept from one to ten checks in a bunch. Similarly, it is also capable of accepting cash. More typically, it is configured to accept U.S. paper notes in specified denominations. As is well-known, this type of technology is readily available such as with change machines currently in use which can be improved in a routine and conventional manner. Thus, the unit is capable of accepting at least 98% of valid notes in good condition, and reject all counterfeit notes.

[0052] With respect to the image server, it provides rudimentary storage and manual processing of check image files transmitted from the automatic teller machine. Examples of software which is readily commercially available for use on the image server includes the Microsoft Windows NT 4.0 Server Operating System, SQL Database, Visual Basic 5.0 Environment, and commercial graphic tools such as Lead Tools, Adobe Photoshop and Pegasus Tool Kits. The print server will provide a framework for MICR printer management software, and will be connected to the image server through a local area network and to the MICR printer either through a local area network, dedicated Ethernet LAN, Centronics or SCSI. The print server includes conventional software to prepare check reproduction jobs using commercial software such as Adobe Photoshop, or

through PCL 5. The print server software may include Windows NT 4.0 Server Operating System and printer drivers for the attached MICR printer. In addition, Visual Basic or C++ may be used to transfer check images and MICR code line data either manually or automatically from the image server through Ethernet LAN. The MICR code line data is transferred to PCL fine language and transmitted to the MICR printer with print format data and check image file data. A JPEG image file within a TIFF capture file will be rendered into graphics data for the printer by commercially available software tools, such as from Lead Tools or Pegasus. The printer server application will generate a page or pages containing the front and back images of reproduced checks for each deposit transaction. One side of the page will contain only check front images, and the other side of the page will contain only check back images. The front and back images for each check must be registered accurately to allow the subsequent cutter operation to generate usable reproductions.

[0053] For the high speed MICR printer, an MICR laser printer such as one available from Hewlett Packard under the commercial name HP5000, with MICR modifications, can be used to generate paper reproductions of check images. Such a printer is typically capable of printing more than twenty-five pages per minute in text mode.

[0054] Conventional paper cutters and check readers/sorters can be employed in the system. An example of a check reader/sorter which can be used is one available from NCR Corporation under the commercial name NCR7780, a dedicated controller under the name NCR3349-2030 with LAN connection is supplied with the sorter.

[0055] Thus, as can be appreciated, the specific elements, including the various aspects of the network provide the various means and functionality for the system as described in the summary of the invention previously, as well as set forth in the claims, as will be readily apparent to those of ordinary skill in the art.

[0056] Having thus generally described the invention, the same will become better understood from the appended claims in which it is set forth in an nonlimiting matter, and for which variations thereof may be encompassed by the appended claims.

Claims

1. A method for image based transactions, comprising:

   receiving at a first location at least one of an instrument and cash having a front face and a back face;

   scanning the front face and the back face of said at least one of an instrument and cash to create a deposited instrument or deposited cash;

   transmitting the scanned deposited instrument or cash from the first location to a second location; and

   processing a transaction with the scanned deposited instrument or cash.

2. The method of claim 1 wherein the deposited at least one of an instrument and cash is a check; and wherein said processing comprises crediting a deposit in the amount of the check to a customer's account.

3. The method of claim 2 further comprising displaying an image of the scanned at least one of an instrument and cash on a terminal display at the first location to provide confirmation to a customer that the deposit has been accepted.

4. The method of claim 1 wherein the scanning is conducted on an instrument and further comprising recreating the scanned deposited instrument onto paper.

5. The method of claim 4 wherein said recreating of the instrument onto paper further comprises cutting the paper to the size of a check.

6. The method of claim 5 wherein said recreating of the instrument onto paper is done at the second location.

7. The method of claim 1 wherein said first location is an automatic teller machine, owned and operated by a bank for its customers, having a scanner and display, and the method further comprising storing the scanned at least one of an instrument and cash in the automatic teller machine.

8. The method of claim 4 further comprising recreating the scanned deposited instrument into a paper image which is MICR encoded.

9. The method of claim 1 further comprising separately entering the amount on the at least an instrument and cash which has been scanned, comparing the amount entered with the amount scanned, and if the scanned amount matches the entered amount, conducting the processing of the transaction.

10. The method of claim 1 further comprising composing, encrypting and digitally signing the instrument before the transmission to the second location for processing.

11. The method of claim 1 wherein said first location is an automatic teller machine, owned and/or operated by someone other than the owner of the sec-

ond location.

12. The method of claim 1 wherein said at least one of an instrument and cash is a check.

13. The method of claim 1 wherein said first location is a branch of a bank.

14. The method of claim 1 wherein said first location is a retail business location.

15. The method of claim 1 wherein said first location is a business.

16. The method of claim 1 wherein said first location is outside the United States.

17. The method of claim 1 further comprising voiding said instrument at the first location by printing on the instrument or destroying the instrument.

18. The method of claim 1 further comprising endorsing the instrument.

19. The method of claim 9 further comprising transmitting the image to another location to display to an operator for resolution if the amounts entered and scanned differ.

20. The method of claim 1 further comprising comparing the information on the instrument to information contained in a file of indicators of potential loss.

21. The method of claim 1 further comprising maintaining a file of payor bank preferences for how the payor bank will receive presentment, and processing the transaction in accordance with the preferences.

22. The method of claim 21 further comprising using the information in the payor bank preference file to determine whether presentment will be by paper, ECP, image, ACH or other method.

23. The method of claim 1 further comprising maintaining a file of routing preferences, and processing the transaction in accordance with the preferences.

24. A system for conducting image based transactions, comprising:

a scanner located at a first location and configured for scanning the front face and the back face of at least one of an instrument and cash, having a front face and a back face, for creating a deposited instrument or deposited cash;
means for transmitting the scanned deposited instrument or cash from the first location to a second location;
means for receiving the transmitted scanned deposited instrument or cash, said means for receiving being located at the second location; and
means for processing a transaction with the scanned deposited instrument or cash.

25. The system of claim 24 further comprising means for processing a transaction with the same information as if the original was available.

26. The system of claim 25 wherein said scanner is adapted for scanning the front face and back face of a check; and wherein said means for processing is for crediting a deposit in the amount of a scanned check to a customer's account.

27. The system of claim 26 further comprising a display located at the first location for displaying an image of a scanned at least one of an instrument and cash, for providing visual confirmation to a customer that the deposit has been accepted.

28. The system of claim 24 further comprising a printer adapted for recreating an instrument as an image on paper.

29. The system of claim 28 wherein said printer is located at the second location.

30. The system of claim 24 further comprising an automatic teller machine having said scanner thereon at the first location, and having a secured container region therein for storing scanned instruments or cash in the automatic teller machine.

31. The system of claim 28 wherein said printer is capable of recreating the scanned image into a paper image which is MICR encoded.

32. The system of claim 24 further comprising: means for separately entering the amount on an at least one of an instrument and cash which has been scanned; and means for comparing the account entered with the amount scanned for allowing transmission to conduct processing of the transaction.

33. The system of claim 24 further comprising means for compressing, encrypting and digitally signing the scanned at least one of an instrument and cash before transmission to the second location for processing.

34. The system of claim 24 wherein said scanner is adapted for scanning the front face and the back face of a check.

35. The system of claim 24 wherein said second location has means for sending the information it receives to a third location for processing within or for another bank.

36. The system of claim 24 wherein the second location has means for sending the information it receives to the Federal Reserve Bank or one of its offices or a clearinghouse as a third location, and the third location has means for creating the images on paper and MICR encodes them for entry into the check processing system or sending the information to a bank for payment.

37. The system of claim 24 further comprising means at the second for sending the information it receives directly to the payor bank or its processing agent or correspondent for payment.

38. The system of claim 24 further comprising a device having said scanner thereon at the first location, and having a secured container region therein for storing scanned instruments or cash at a branch of a bank.

39. The system of claim 24 further comprising a device having said scanner thereon at the first location, and having a secured container region therein for storing scanned instruments or cash at a business.

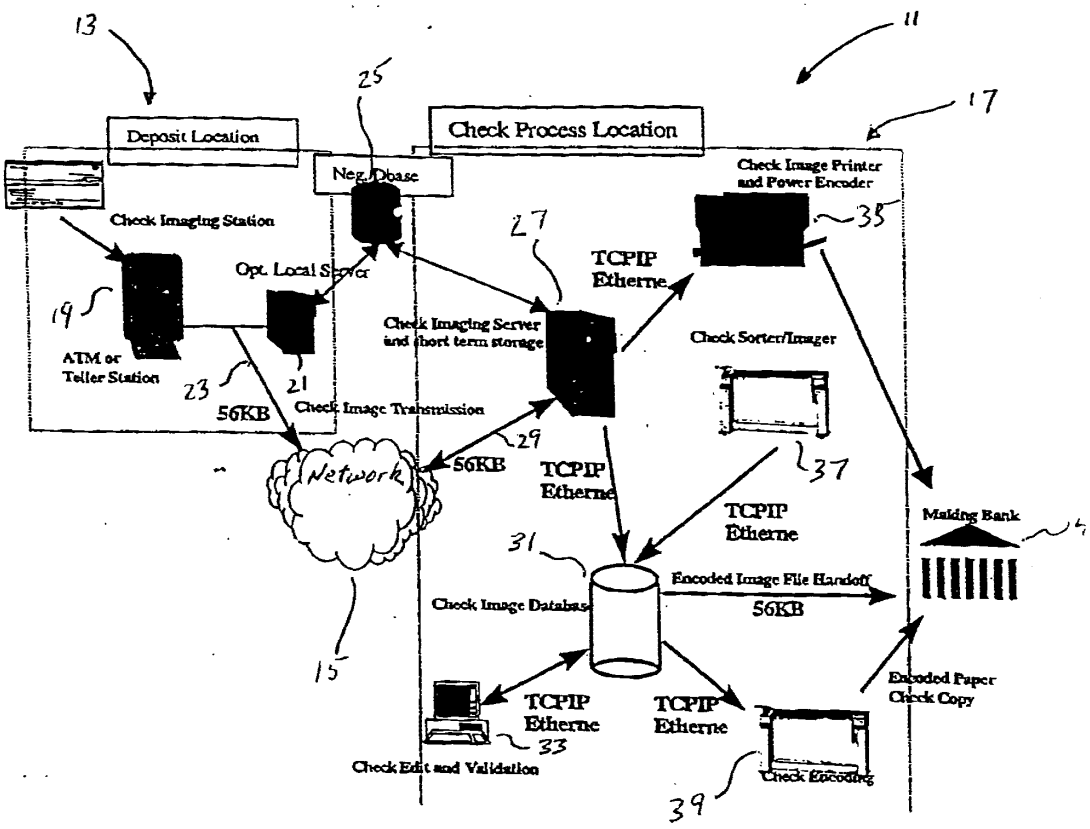
13
11
25
17
Deposit Location
Check Process Location
Neg. Dbase
Check Image Printer and Power Encoder
Check Imaging Station
27
35
TCPIP Etherne
Opt. Local Server
19
Check Imaging Server and short term storage
Check Sorter/Imager
ATM or Teller Station
23
21
56KB
Check Image Transmission
29
Network
56KB
TCPIP Etherne
37
TCPIP Etherne
Mailing Bank
31
Encoded Image File Handoff
Check Image Database
56KB
15
Encoded Paper Check Copy
TCPIP Etherne
TCPIP Etherne
33
Check Edit and Validation
39
Check Encoding

Fig. 1

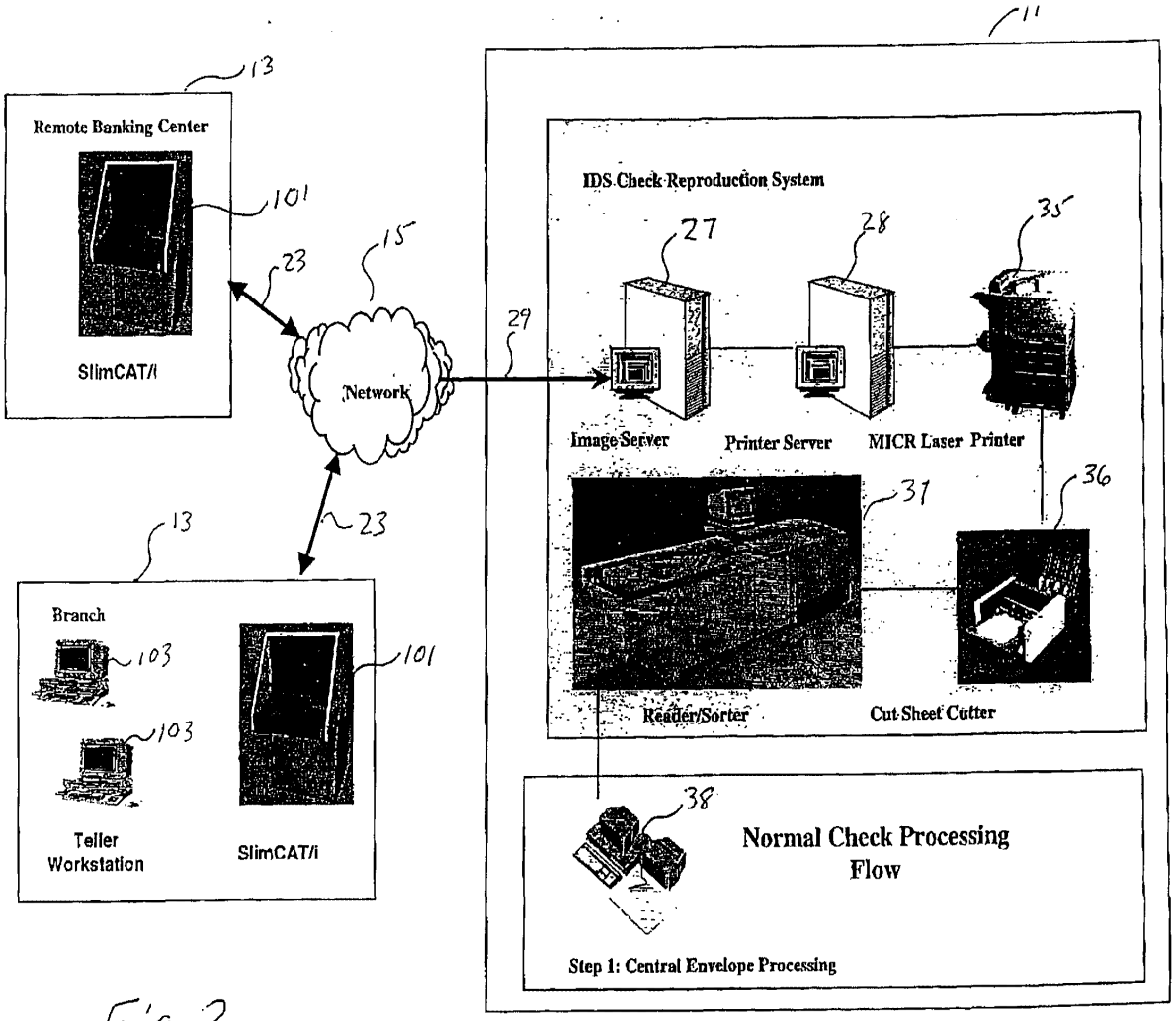
11
13
Remote Banking Center
101
SlimCAT/i
23
15
Network
29
IDS Check Reproduction System
27
28
35
Image Server
Printer Server
MICR Laser Printer
31
36
Reader/Sorter
Cut Sheet Cutter
13
Branch
103
103
101
Teller Workstation
SlimCAT/i
23
38
Normal Check Processing Flow
Step 1: Central Envelope Processing

Fig. 2

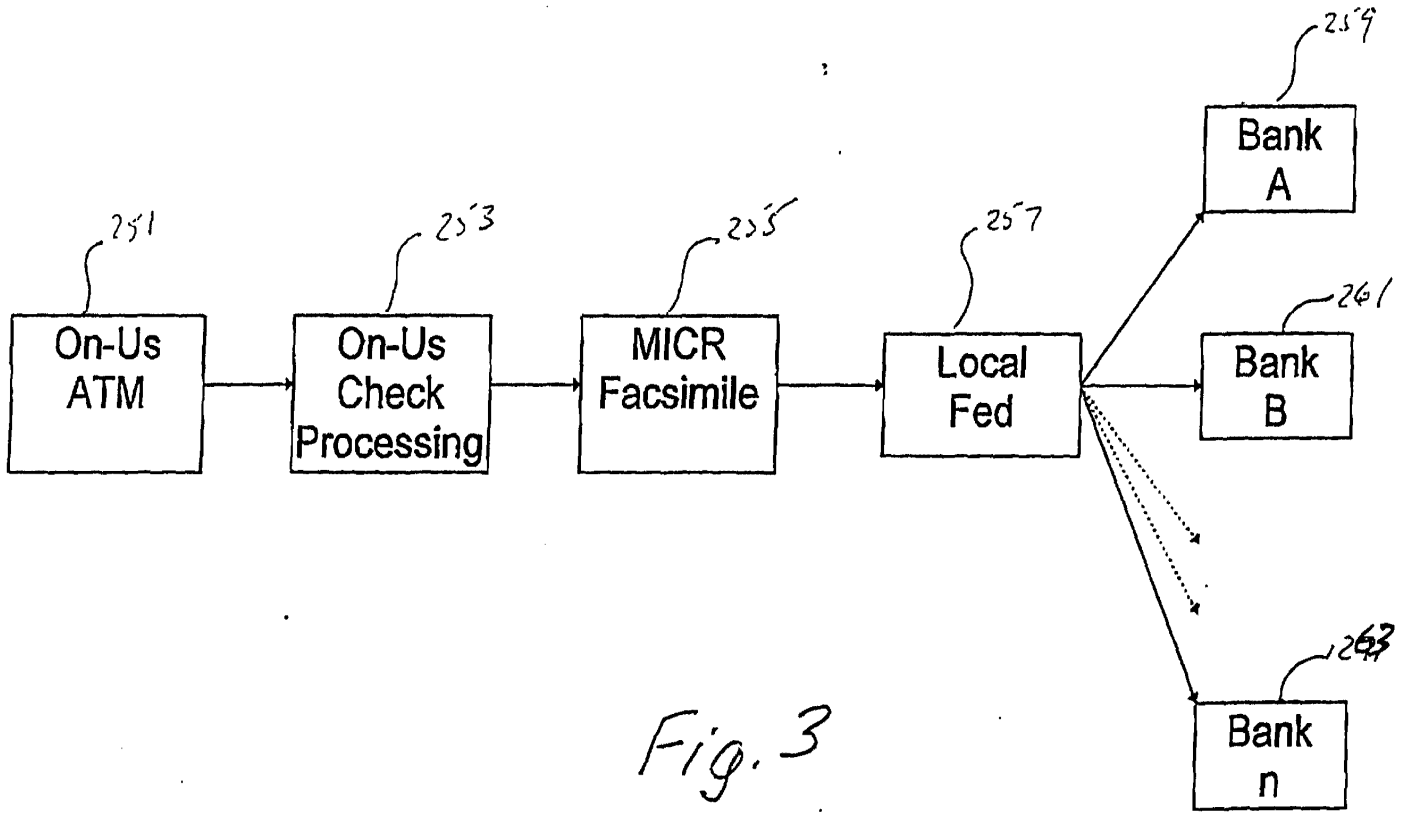
251
On-Us ATM
253
On-Us Check Processing
255
MICR Facsimile
257
Local Fed
259
Bank A
261
Bank B
263
Bank n

Fig. 3

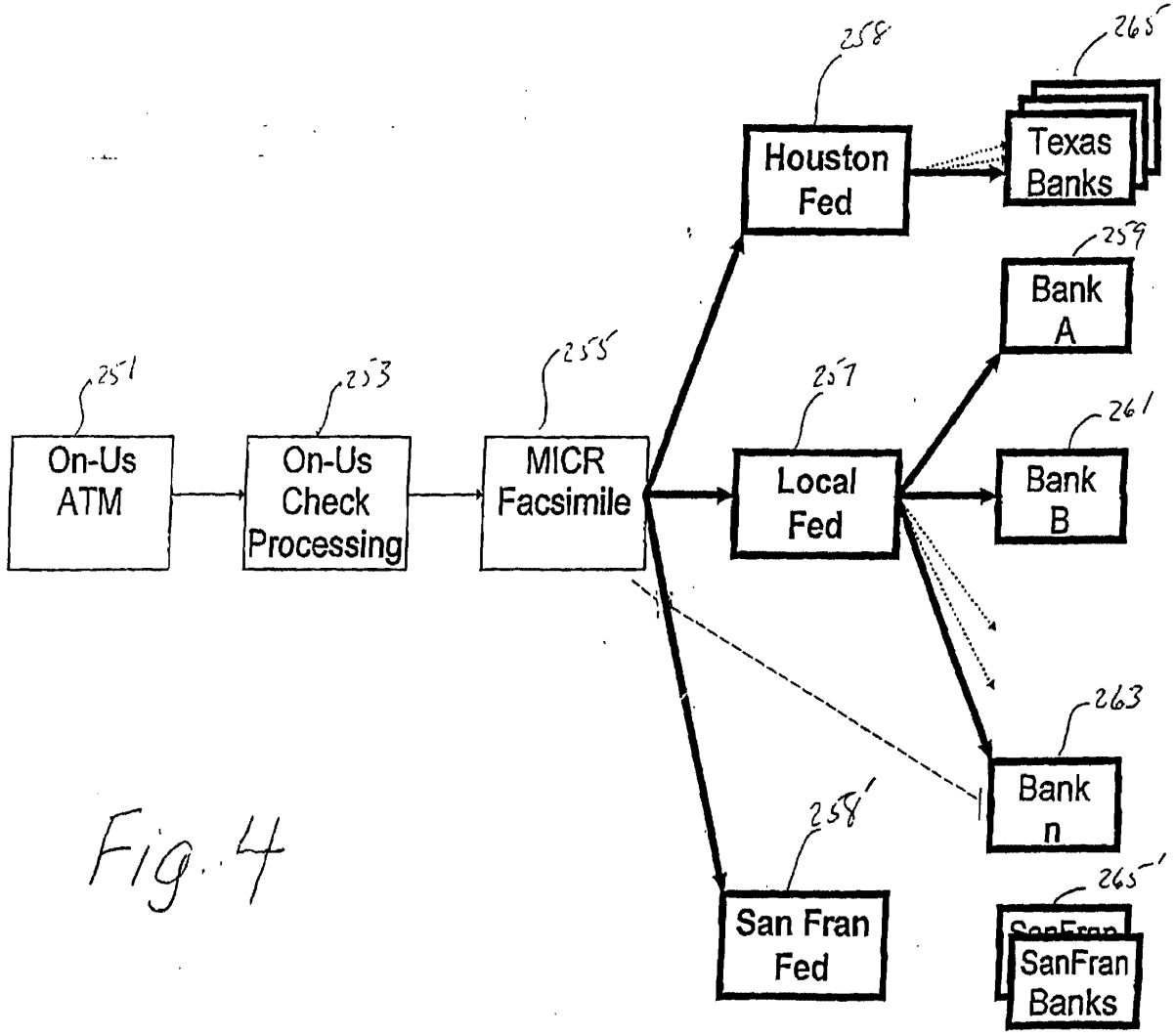
251
On-Us ATM
253
On-Us Check Processing
255
MICR Facsimile
258
Houston Fed
265
Texas Banks
257
Local Fed
259
Bank A
261
Bank B
263
Bank n
258'
San Fran Fed
265'
SanFran Banks

Fig. 4

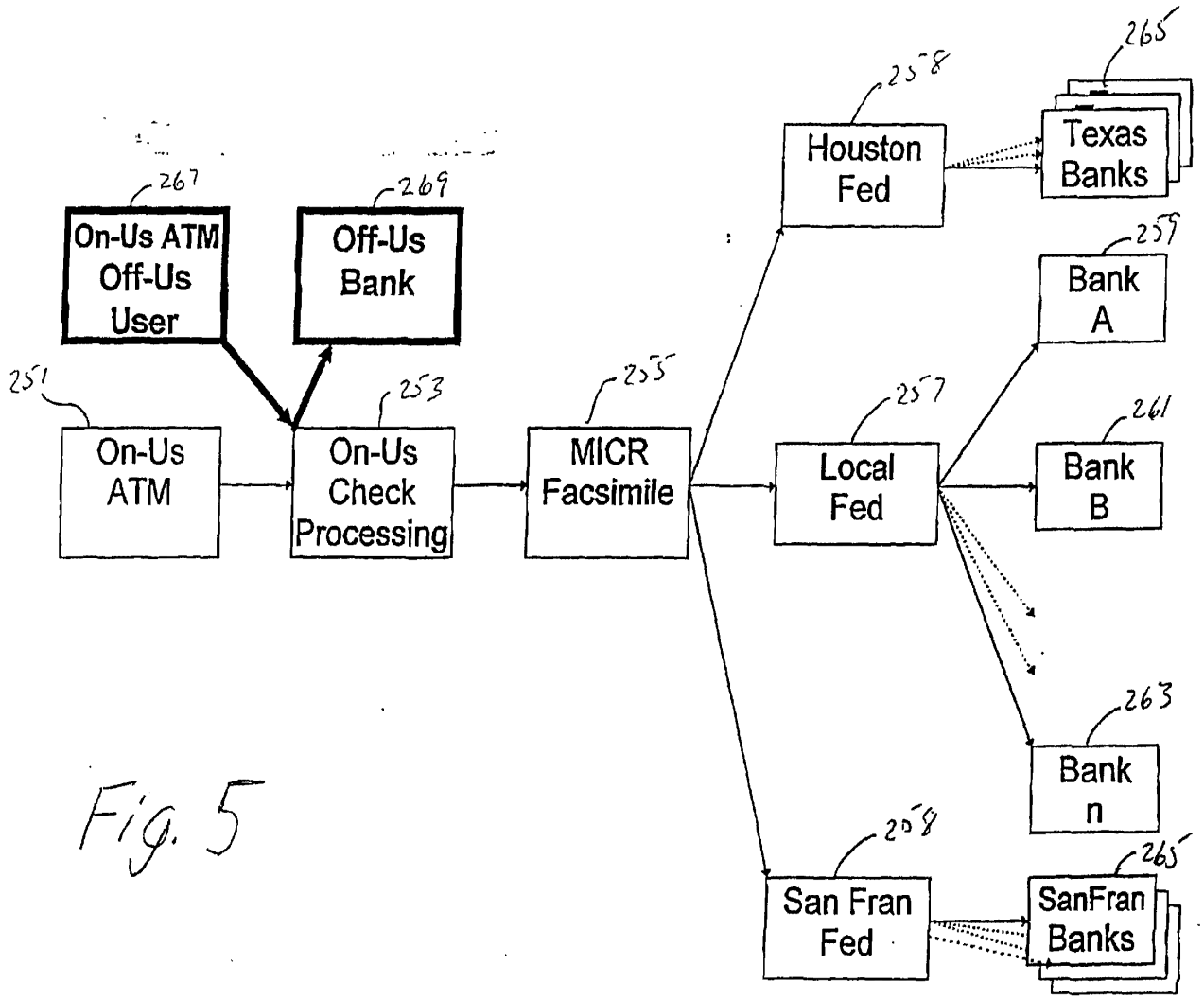
On-Us ATM Off-Us User
267
Off-Us Bank
269
251
On-Us ATM
253
On-Us Check Processing
255
MICR Facsimile
Houston Fed
258
Texas Banks
265
Bank A
259
Local Fed
257
Bank B
261
Bank n
263
San Fran Fed
258
SanFran Banks
265

Fig. 5

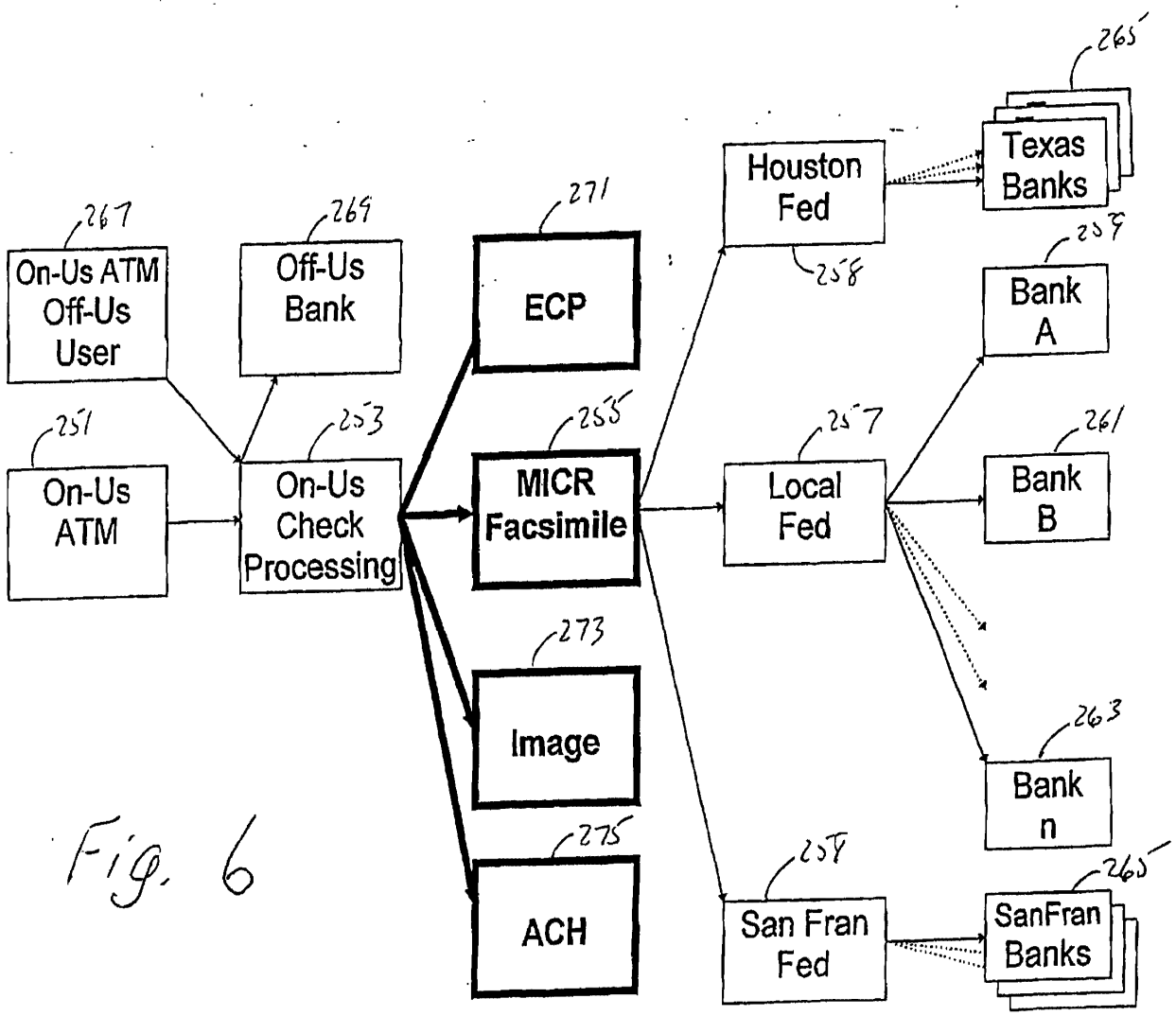
On-Us ATM Off-Us User
267
Off-Us Bank
269
On-Us ATM
251
On-Us Check Processing
253
ECP
271
MICR Facsimile
255
Image
273
ACH
275
Houston Fed
258
Local Fed
257
San Fran Fed
259
Texas Banks
265
Bank A
259
Bank B
261
Bank n
263
SanFran Banks
265

Fig. 6

Fig. 7

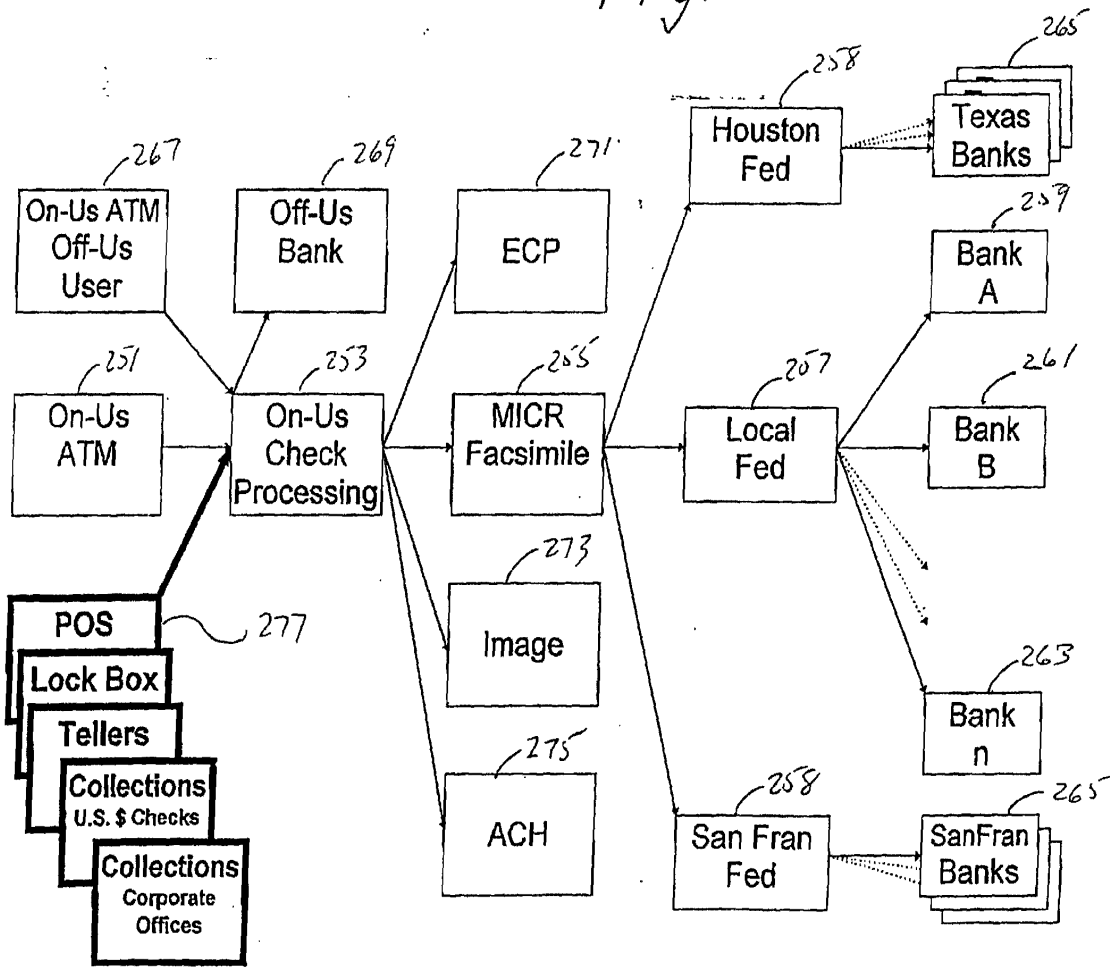
On-Us ATM Off-Us User
267
Off-Us Bank
269
ECP
271
Houston Fed
258
Texas Banks
265
Bank A
259
On-Us ATM
251
On-Us Check Processing
253
MICR Facsimile
255
Local Fed
257
Bank B
261
POS
Lock Box
Tellers
Collections U.S. $ Checks
Collections Corporate Offices
277
Image
273
Bank n
263
ACH
275
San Fran Fed
258
SanFran Banks
265

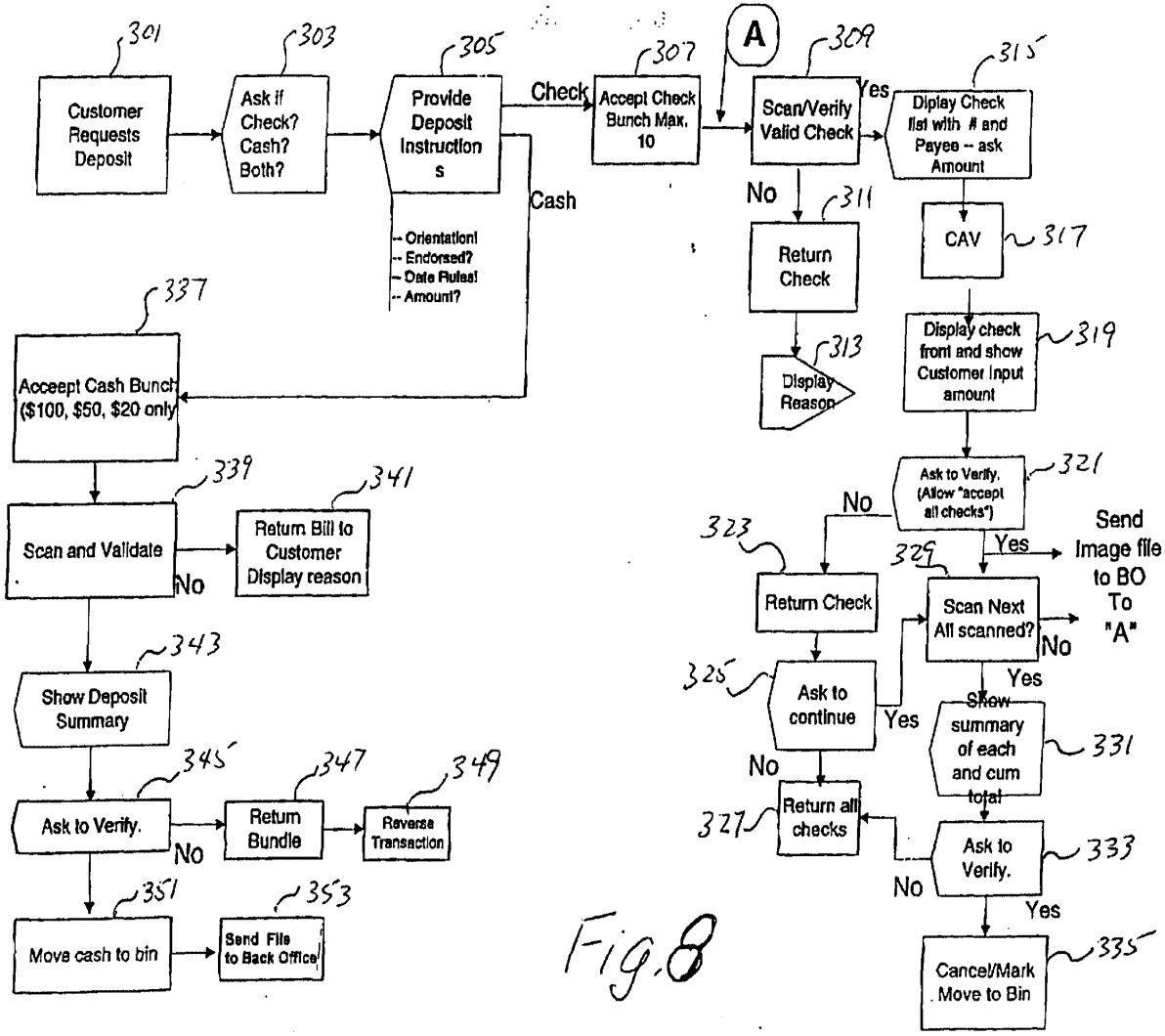
301
Customer Requests Deposit
303
Ask if Check? Cash? Both?
305
Provide Deposit Instructions
-- Orientation!
-- Endorsed?
-- Date Rules!
-- Amount?
Check
Cash
307
Accept Check Bunch Max. 10
A
309
Scan/Verify Valid Check
Yes
No
311
Return Check
313
Display Reason
315
Diplay Check list with # and Payee -- ask Amount
CAV
317
Display check front and show Customer Input amount
319
Ask to Verify. (Allow "accept all checks")
321
No
Yes
Send Image file to BO To "A"
323
Return Check
325
Ask to continue
Yes
No
327
Return all checks
329
Scan Next All scanned?
No
Yes
Show summary of each and cum total
331
Ask to Verify.
333
No
Yes
Cancel/Mark Move to Bin
335
337
Accept Cash Bunch ($100, $50, $20 only)
339
Scan and Validate
No
341
Return Bill to Customer Display reason
343
Show Deposit Summary
345
Ask to Verify.
No
347
Return Bundle
349
Reverse Transaction
351
Move cash to bin
353
Send File to Back Office

Fig. 8

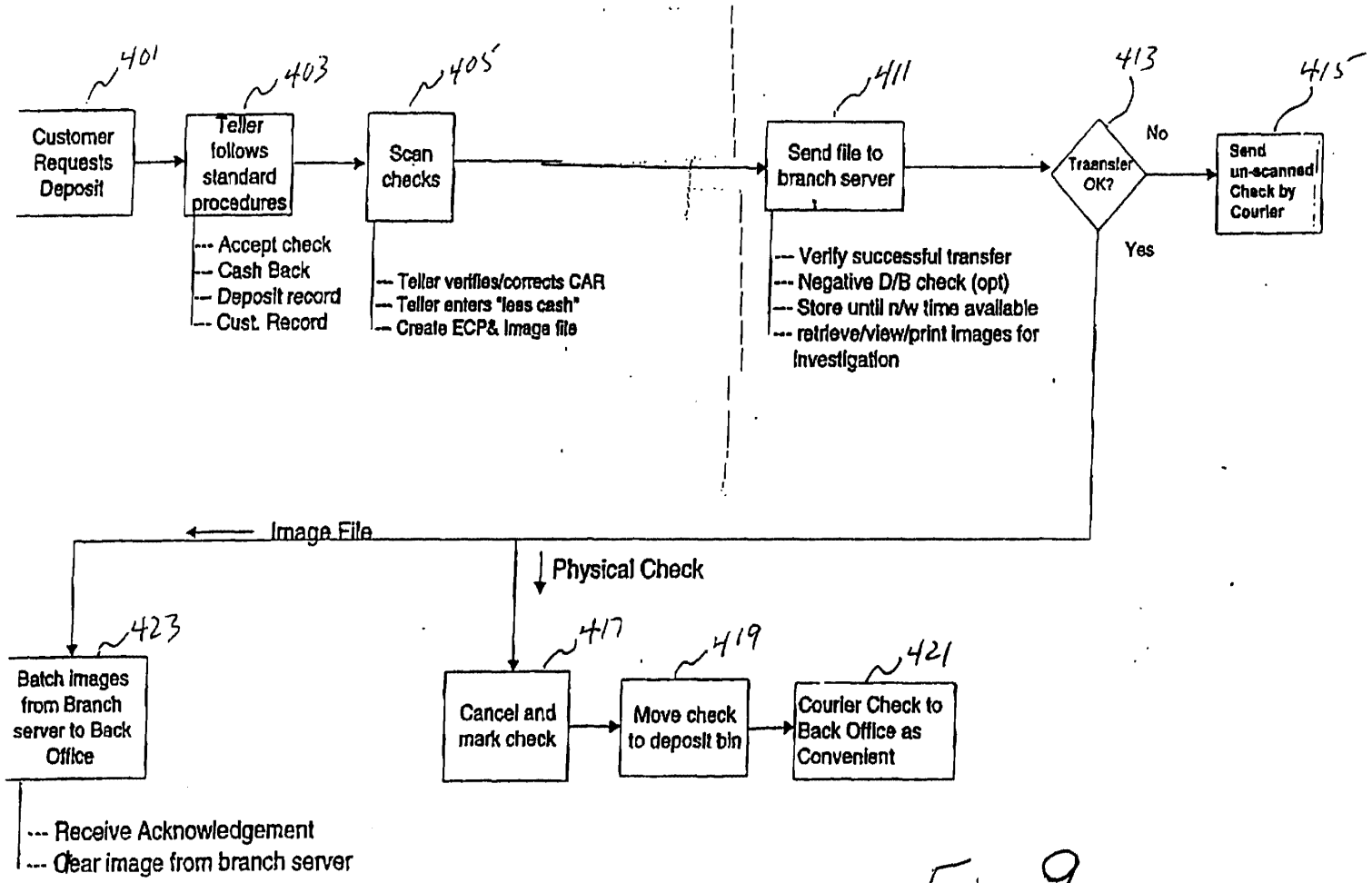
401
Customer Requests Deposit
403
Teller follows standard procedures
--- Accept check
--- Cash Back
--- Deposit record
--- Cust. Record
405
Scan checks
--- Teller verifies/corrects CAR
--- Teller enters "less cash"
--- Create ECP& Image file
411
Send file to branch server
--- Verify successful transfer
--- Negative D/B check (opt)
--- Store until n/w time available
--- retrieve/view/print images for investigation
413
Transfer OK?
No
Yes
415
Send un-scanned Check by Courier
Image File
Physical Check
423
Batch images from Branch server to Back Office
--- Receive Acknowledgement
--- Clear image from branch server
417
Cancel and mark check
419
Move check to deposit bin
421
Courier Check to Back Office as Convenient

Fig. 9

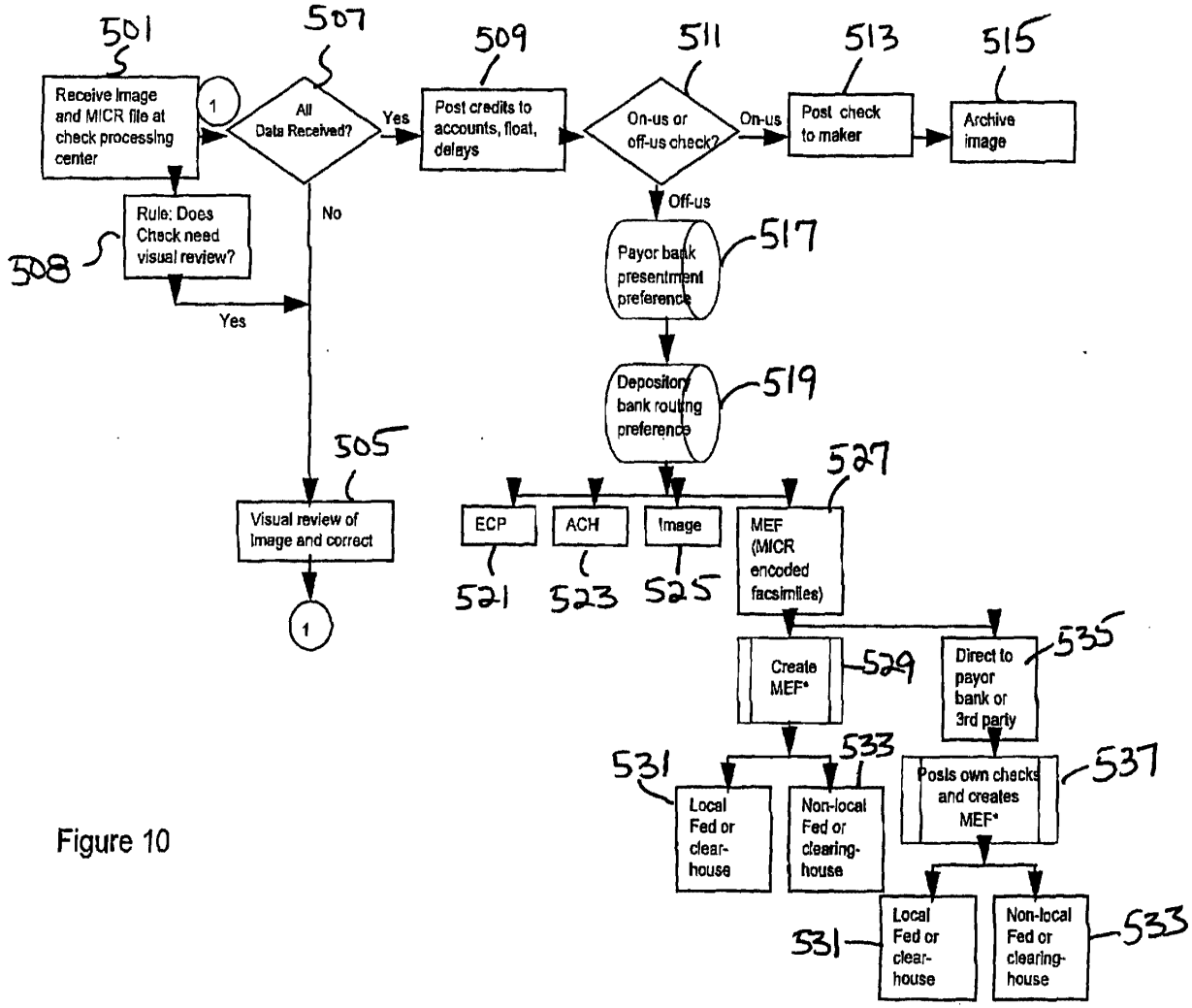
501
Receive image and MICR file at check processing center
1
507
All Data Received?
Yes
No
509
Post credits to accounts, float, delays
511
On-us or off-us check?
On-us
513
Post check to maker
515
Archive image
Off-us
508
Rule: Does Check need visual review?
Yes
517
Payor bank presentment preference
519
Depository bank routing preference
505
Visual review of Image and correct
1
527
ECP
ACH
Image
MEF (MICR encoded facsimiles)
521
523
525
Create MEF*
529
Direct to payor bank or 3rd party
535
531
533
Local Fed or clear-house
Non-local Fed or clearing-house
Posts own checks and creates MEF*
537
531
Local Fed or clear-house
Non-local Fed or clearing-house
533

Figure 10

MEFs

Original

John Smith
2 Jefferson Rd
E. Brunswick, NJ

. April 29, 1999 .

Pay To The
Order Of: COMCS $ 37 no/00

Thirty-Seven and no/100

. John Smith .

021000089⑆: 123456789⑈ ⑈ ⑇0000003700 ⑇

MEF

John Smith
2 Jefferson Rd
E. Brunswick, NJ

. April 29, 1999 .

Pay To The
Order Of: COMCS $ 37 no/00

Thirty-Seven and no/100

. John Smith .

021000089⑆: 123456789⑈ ⑈ ⑇0000003700 ⑇

021000089⑆:123456789⑈ ⑈⑇0000003700 ⑇

FIG. 11

European Patent Office

EUROPEAN SEARCH REPORT

Application Number
EP 99 20 2212

DOCUMENTS CONSIDERED TO BE RELEVANT

Category	Citation of document with indication, where appropriate, of relevant passages	Relevant to claim	CLASSIFICATION OF THE APPLICATION (Int.Cl.7)
X	US 4 264 808 A (C.J. OWENS) 28 April 1981 (1981-04-28)	1,2,4,6, 24-26, 28,29, 34,38	G07F19/00 G07F7/10 G06F17/60
A	* abstract; claims; figures 1-4 *	7,8, 11-13, 20,30, 31,33, 35-37	
	* column 6, line 26 - column 7, line 58 *		
Y	EP 0 616 296 A (AT & T GLOBAL INFORMATION SOLUTIONS INTERNATIONAL) 21 September 1994 (1994-09-21)	1,2,12, 13, 24-26, 34,38	
A	* abstract; claims; figures *	3,7,9, 11, 14-18, 27,30,32	
	* column 4, line 56 - column 6, line 21 *		
Y	EP 0 593 209 A (AMERICAN TELEPHONE AND TELEGRAPH) 20 April 1994 (1994-04-20)	1,2,12, 13, 24-26, 34,38	
A	* abstract; claims; figures *	10,20, 21,23,33	
A	EP 0 426 507 A (MONEYFAX) 8 May 1991 (1991-05-08)	1,2,4-8, 12-17, 19,20, 24-26, 28-31, 33,37	
	* abstract; claims; figures 1-5 *		
A	US 4 270 042 A (J.M. CASE) 26 May 1981 (1981-05-26)		
	-/--		

TECHNICAL FIELDS SEARCHED (Int.Cl.7)

G07F
G06F

The present search report has been drawn up for all claims

Place of search	Date of completion of the search	Examiner
THE HAGUE	29 October 1999	David, J

CATEGORY OF CITED DOCUMENTS

X : particularly relevant if taken alone
Y : particularly relevant if combined with another document of the same category
A : technological background
O : non-written disclosure
P : intermediate document

T : theory or principle underlying the invention
E : earlier patent document, but published on, or after the filing date
D : document cited in the application
L : document cited for other reasons

& : member of the same patent family, corresponding document

EPO FORM 1503 03.82 (P04C01)

European Patent Office

EUROPEAN SEARCH REPORT

Application Number
EP 99 20 2212

DOCUMENTS CONSIDERED TO BE RELEVANT

Category	Citation of document with indication, where appropriate, of relevant passages	Relevant to claim	CLASSIFICATION OF THE APPLICATION (Int.Cl.7)
A	EP 0 029 733 A (E.L. BRAUN) 3 June 1981 (1981-06-03) ---		
A	US 5 594 225 A (A.D. BOTVIN) 14 January 1997 (1997-01-14) ---		
A	US 5 590 196 A (T. MOREAU) 31 December 1996 (1996-12-31) ---		
A	US 5 615 268 A (S.F. BISBEE) 25 March 1997 (1997-03-25) ---		
A	WO 98 03942 A (Y. JOHNSSON) 29 January 1998 (1998-01-29) -----		

TECHNICAL FIELDS SEARCHED (Int.Cl.7)

The present search report has been drawn up for all claims

Place of search	Date of completion of the search	Examiner
THE HAGUE	29 October 1999	David, J

CATEGORY OF CITED DOCUMENTS

X : particularly relevant if taken alone
Y : particularly relevant if combined with another document of the same category
A : technological background
O : non-written disclosure
P : intermediate document

T : theory or principle underlying the invention
E : earlier patent document, but published on, or after the filing date
D : document cited in the application
L : document cited for other reasons
.....
& : member of the same patent family, corresponding document

EPO FORM 1503 03.82 (P04C01)

ANNEX TO THE EUROPEAN SEARCH REPORT ON EUROPEAN PATENT APPLICATION NO. EP 99 20 2212

This annex lists the patent family members relating to the patent documents cited in the above-mentioned European search report.
The members are as contained in the European Patent Office EDP file on
The European Patent Office is in no way liable for these particulars which are merely given for the purpose of information.

29-10-1999

Patent document cited in search report	Publication date	Patent family member(s)	Publication date
US 4264808 A	28-04-1981	CA 1135422 A	09-11-1982
		CA 1165446 A	10-04-1984
		EP 0020507 A	07-01-1981
		JP 2006100 B	07-02-1990
		JP 55500798 T	16-10-1980
		WO 8000759 A	17-04-1980
EP 0616296 A	21-09-1994	JP 7110841 A	25-04-1995
EP 0593209 A	20-04-1994	US 5373550 A	13-12-1994
		JP 6208578 A	26-07-1994
EP 0426507 A	08-05-1991	US 5122950 A	16-06-1992
		JP 3154162 A	02-07-1991
		JP 6009052 B	02-02-1994
		US 5265008 A	23-11-1993
US 4270042 A	26-05-1981	NONE	
EP 0029733 A	03-06-1981	US 4321672 A	23-03-1982
		CA 1162307 A	14-02-1984
		CA 1195776 C	22-10-1985
US 5594225 A	14-01-1997	US 5750972 A	12-05-1998
US 5590196 A	31-12-1996	NONE	
US 5615268 A	25-03-1997	US 5748738 A	05-05-1998
WO 9803942 A	29-01-1998	AU 3714797 A	10-02-1998

EPO FORM P0459

For more details about this annex : see Official Journal of the European Patent Office, No. 12/82

(12) INTERNATIONAL APPLICATION PUBLISHED UNDER THE PATENT COOPERATION TREATY (PCT)

(19) World Intellectual Property Organization
International Bureau

(43) International Publication Date
23 August 2001 (23.08.2001)

PCT

(10) International Publication Number
WO 01/61436 A2

(51) International Patent Classification[7]: G06F

(21) International Application Number: PCT/US01/05265

(22) International Filing Date: 16 February 2001 (16.02.2001)

(25) Filing Language: English

(26) Publication Language: English

(30) Priority Data:
09/506,434 18 February 2000 (18.02.2000) US

(71) Applicant: **BANK ONE CORPORATION** [US/US]; 1 Bank One Plaza, Chicago, IL 60670 (US).

(72) Inventors: **ACHARYA, Ravi, V.**; 3131 Meetinghouse Road, Apt. H-10, Boothwyn, PA 19061 (US). **KANG, Jack**; 102 Clear Creek Drive, Bear, DE 19701-3336 (US).

(74) Agents: **BALDERSTON, Scott, D.** et al.; Hunton & Williams, 1900 K Street, N.W., Washington, DC 20006 (US).

(81) Designated States *(national)*: AE, AG, AL, AM, AT, AU, AZ, BA, BB, BG, BR, BY, BZ, CA, CH, CN, CR, CU, CZ, DE, DK, DM, DZ, EE, ES, FI, GB, GD, GE, GH, GM, HR, HU, ID, IL, IN, IS, JP, KE, KG, KP, KR, KZ, LC, LK, LR, LS, LT, LU, LV, MA, MD, MG, MK, MN, MW, MX, MZ, NO, NZ, PL, PT, RO, RU, SD, SE, SG, SI, SK, SL, TJ, TM, TR, TT, TZ, UA, UG, UZ, VN, YU, ZA, ZW.

(84) Designated States *(regional)*: ARIPO patent (GH, GM, KE, LS, MW, MZ, SD, SL, SZ, TZ, UG, ZW), Eurasian patent (AM, AZ, BY, KG, KZ, MD, RU, TJ, TM), European patent (AT, BE, CH, CY, DE, DK, ES, FI, FR, GB, GR, IE, IT, LU, MC, NL, PT, SE, TR), OAPI patent (BF, BJ, CF, CG, CI, CM, GA, GN, GW, ML, MR, NE, SN, TD, TG).

Published:
— *without international search report and to be republished upon receipt of that report*

For two-letter codes and other abbreviations, refer to the "Guidance Notes on Codes and Abbreviations" appearing at the beginning of each regular issue of the PCT Gazette.

WO 01/61436 A2

(54) Title: SYSTEM AND METHOD FOR ELECTRONIC DEPOSIT OF THIRD-PARTY CHECKS BY NON-COMMERCIAL BANKING CUSTOMERS FROM REMOTE LOCATIONS

(57) Abstract: A system and method for initiating a deposit transaction, where the depositor is a non-commercial banking customer located at a remote location, and where the item to be deposited is a paper check from a third party, payable to the depositor. The enabling system features a Remote Customer Terminal (RCT) with certain input devices, connected to a bank system. The image and/or other data sent from the RCT to the Bank of First Deposit (BOFD) may be processed by conversion to Electronic Funds Transfer (EFT), via Electronic Check Presentment (ECP), or via check reconstruction. The new system and method provide convenience and improved transaction processing speed compared to other transactions that begin with a third party check.

SYSTEM AND METHOD FOR ELECTRONIC DEPOSIT OF THIRD-PARTY CHECKS BY NON-COMMERCIAL BANKING CUSTOMERS FROM REMOTE LOCATIONS

FIELD OF THE INVENTION

The invention relates generally to a system and method for initiating a deposit transaction, where the depositor is a non-commercial banking customer located at a remote location, and where the item to be deposited is a paper check from a third party (i.e. other than the bank customer or the paying bank), payable to the depositor.

As used herein, a "bank" may be a bank or other financial institution, and a "check" may be a check or other negotiable instrument.

BACKGROUND OF THE INVENTION

Methods and systems for initiating electronic financial transactions from remote locations are increasingly common. Examples are the use of Automated Teller Machines (ATM's) to withdraw cash, and the use of telephonic systems and personal computers to initiate a transfer of funds between a bank customers accounts, or for electronic payment of bills. Such transactions are commonly referred to as Electronic Funds Transfer (EFT).

Two principal advantages of EFT, from the perspective of the customer, are convenience and speed. They are convenient to the extent that they do not require customers to physically visit the bank in order to initiate a financial transaction. Electronic transactions are also completed more quickly than those involving paper instruments and/or documents that must be physically routed to different locations in order to complete the transaction. A significant disadvantage of present EFT systems, however, is that they are not equipped to accept paper checks as part of the transaction. Since it is estimated that paper check volume in the United States exceeds sixty billion annually, this is a significant drawback.

Some approaches have been disclosed for converting paper checks to electronic transactions. Using an approach commonly known as Electronic Check Presentment (ECP), a bank of first deposit (the bank first receiving a paper check for deposit, hereinafter BOFD) will capture an electronic image of the check or otherwise convert the

check to an electronic transaction for processing through a clearing house and the paying bank. The image of the check and/or check data essentially take the place of the paper check for the purposes of payment. For a general description of the process, *see* U.S. Pat. No. 5,237,159. While this method may speed transaction time, it offers no improvement in convenience for the customer who must still initiate the transaction by physically delivering the paper check to the bank.

A related approach allows a customer to write a check for purchases at the point-of-sale, typically a retail store, where the transaction is then converted into either an EFT or ECP transaction. Under this method, however, the bank customer is the payor. No provision is made for the deposit of checks by a payee.

In sum, existing systems that perform electronic banking transactions are either not equipped to handle paper checks, are configured only for bank-to-bank transactions, or do not accept third party checks for deposit. The resulting lack of convenience, and other drawbacks, limit the utility of such systems for non-commercial bank customers.

SUMMARY OF THE INVENTION

An object of the invention is to overcome these and other drawbacks in existing methods and systems.

Accordingly, it is one object of the invention to provide a system and method for allowing non-commercial bank customers to deposit third-party checks from remote locations.

It is another object of the invention to provide a system and method that would allow bank customers to initiate such transactions at home. Such a method would be a convenience to many bank customers, and provide a new level of independence for customers who are confined to their homes due to poor health, disability, or for other reasons.

It is another object of the invention to provide a method that would allow bank customers to deposit third party checks at ATM machines. Most ATM's simply provide a means for holding paper checks until they are collected for processing. The present invention would make ATM's more useful by providing for electronic deposit of third party checks.

It is another object of the invention to provide alternative methods for the BOFD to process such transactions. By identifying a system and method for deposit that is compatible with ECP, EFT and reconstructed check processing, banks will have practical alternatives in the implementation of this new approach.

To achieve these and other objects of the invention, a payee would deposit a third party paper check using a Remote Customer Terminal (RCT) that can communicate with a BOFD system. In general terms, the RCT is equipped to "accept" paper checks. Images and/or other data from the RCT are sent to the BOFD system. The BOFD can process the transaction in several different fashions.

In the preferred embodiment of the invention, the RCT is located at home, and is a personal computer with an attached image scanner. To initiate the transaction, the customer uses an Internet-based application to access the BOFD system. A pre-assigned Personal Identification Number (PIN) allows the customer to initiate a deposit transaction. When prompted, the customer captures the image of the third-party check on the scanner, and forwards the digital image to the BOFD system. The automated system provides immediate provisional credit from the BOFD to the customer, and forwards the check image and other data to a clearing house in the form of an ECP transaction. Once the transaction has cleared the paying bank, the BOFD issues a permanent credit to the bank customer. Accordingly, the customer has initiated deposit of a third party paper check from the convenience of his/her own home, with the speed of an electronic transaction.

The following drawings and descriptions further describe the invention, including several different embodiments of the major system components and processes. The construction of such a system, implementation of such a process, and advantages will be clear to a person skilled in the art of automated financial transactions.

BRIEF DESCRIPTION OF THE DRAWINGS

Figure 1 is schematic diagram of the system, according to one embodiment of the invention.

Figure 2 is a flow diagram from the perspective of a bank customer, according to one embodiment of the invention.

Figure 3 is a flow diagram from the perspective of the BOFD system, according to one embodiment of the invention.

DETAILED DESCRIPTION OF THE INVENTION

As indicated above, the invention is directed to a system and method for the deposit of third party checks at remote locations by non-commercial bank customers.

Overview of the System

Figure 1 is schematic diagram of the system, according to one embodiment of the invention. The key components are a Remote Customer Terminal (RCT) 100 that is connected to a Bank of First Deposit (BOFD) system 110.

The RCT 100 may be a telephone, fax machine, personal computer, ATM, or any other computer, apparatus, or system capable of collecting data and communicating with BOFD system 110.

Additionally, the RCT 100 may comprise certain input devices 101, output devices 102, Central Processing Unit (CPU) 103, and some amount of machine-readable electronic memory 104. The RCT input devices 101 may comprise a keypad, a keyboard, a microphone, a Magnetic Ink Character Reader (MICR), a Digital Image Scanner (DIS), and any other device capable of collecting data. The RCT output devices 102 may comprise a speaker, a computer display, a paper printer, and any other output device that can communicate a message to a human.

Certain software may also be stored in RCT memory 104 and executed by the CPU 103, for example, to assist in communication and data collection functions. For example, optical character recognition software may be used in conjunction with the DIS to convert machine printed characters to electronic text. Likewise, intelligent character recognition software may be used to convert handwritten characters to electronic text. Additionally, Netscape Navigator™ or Internet Explorer™ may be used as browsers for Internet communications.

The BOFD system 110 may be a telephone, facsimile machine, personal computer, mainframe computer, or any other computer, apparatus, or system capable of receiving data from the RCT, and initiating a deposit transaction. Like the RCT, the BOFD system may be comprised of input devices 111, output devices 112, CPU 113, and electronic memory 114. The BOFD system may further comprise a human operator, or it may be fully automated.

Additionally, the BOFD system is broadly defined to include such network servers or other devices necessary to perform functions such as communication, data collection, and preparation of electronic transactions. Data collection, for example, may be implemented by hosting a World Wide Web site on an Internet server.

The RCT 100 and BOFD system 110 communicate with each other via a communication link 120. The link may operate through a network, such as by direct dial connection to the Internet over a telephone network. It may be accomplished via point-to-point communication, such as with a dedicated line or via a radio frequency or microwave link.

Additionally, the BOFD system 110 may be connected to one or more check clearing systems 130 via a communication link 140. The check clearing systems may comprise for-profit clearing houses 131, Federal Reserve banks 132, and local paying banks 134. The clearing houses 131 and Federal Reserve banks 132 may in turn have means for communication with non-local paying banks 133.

As with link 120, link 140 may be accomplished through any number of schemes for networked or point-to-point communications.

The next two sections provide a description of the new method for depositing third party checks that is provided by the invention.

Overview of the Information Flow From the Customer Perspective

Figure 2 is a diagram illustrating the flow of information from the perspective of a bank customer, according to one embodiment of the present invention.

The process begins when the bank customer receives a check payable to him/her 200. The check may be drawn on the customer's bank, a local bank, a non-local bank in the United States, or a foreign bank.

The customer may then "log on" to the BOFD system 110 from a RCT 100 using a Personal Identification Number (PIN), password, and/or other means of identification 210. The bank customer may then select "check deposit" from a menu of transaction options 220 as presented by the BOFD system 110.

In step 230, the customer may respond to prompts for each item of data needed to deposit the check. In another embodiment, the customer may enter a predetermined set of data all at once, for example where all data input fields are visible on a video display screen. The customer may be prompted to supply missing information in step 240. A complete set of data may comprise customer identification, customer account number, name of payor, name and routing number of payor's bank, the amount of the check, an image of the check, and other information.

The bank customer may then submit the transaction data to the BOFD system for processing 250, and may receive acknowledgement from the BOFD system that the transaction is being processed 260.

The customer may receive a response 270 indicating, for example, that immediate provisional credit has been given, that full credit has been awarded, or that the transaction request has been denied, according to bank procedures.

If credit was issued, the paper check may be subjected to certain check actions 280 in order to prevent re-deposit of the same check. One possible check action is that the check is marked, for example, by human or machine readable ink. Alternatively, the check may be physically captured by the RCT 100, for example, via deposit into an ATM vault.

Overview of the Information Flow From the Bank Perspective

Figure 3 is a diagram illustrating the flow of information from the perspective of the BOFD system, according to one embodiment of the invention.

The process may begin with a logon request 300. A security function 305 may terminate the process for any unauthorized user 310. An authorized user may be promoted to a data collection step, where transaction data is received 315, and an acknowledgement of receipt is sent to the customer 320.

The BOFD system may then review the identity of the paying bank 325. If the BOFD is the paying bank, the BOFD may issue immediate full credit to the account of the payee customer 330. Otherwise, the BOFD may issue "provisional" credit to the customer 335. Regardless of the type of credit issued, the BOFD system may initiate certain check actions 340 to prevent redeposit of the same check (see discussion of step 280 above). This may end the interactive session with the bank customer.

Next, the BOFD may make a decision concerning the method for "clearing" the third party check through another bank 345. If the transaction will be converted to an Electronic Funds Transfer (EFT), the BOFD may have to obtain a payor authorization 350 to support preparation of the EFT transaction 355. Alternatively, the BOFD may format the transaction for Electronic Check Presentment (ECP) 360, according to certain pre-established agreements with the paying bank. If, however, the BOFD has neither the payor's authorization for an EFT, nor an agreement with the paying bank for ECP, then the BOFD may print a reconstructed check 365.

In the case of the reconstructed check 370, the check clearing process 375 is the traditional method for physically routing the paper check to the paying bank for payment. In an EFT or ECP transaction, the check clearing process 375 may be accomplished by automated systems. The BOFD may submit the electronic transactions individually, or in batch. The check clearing process 375 may involve data transfer directly to a local paying bank, of it may involve transfer of data to a clearing house or Federal Reserve bank for ultimate credit by the paying bank.

The paying bank may issue credit for the check 380. If credit is given, the BOFD may change the customer's credit from "provisional" to "full" 385. If however, the paying bank fails to pay the check, the BOFD may retract the "provisional" credit issued earlier 390.

The specification and examples provided above should be considered exemplary only. It is contemplated that the appended claims will cover any other such embodiments or modifications as fall within the true scope of the invention.

What is claimed is:

1. A system comprising:
   (a.) an interface to a remote customer terminal;
   (b.) a bank system; and
   (c.) an interface to a check clearing system;
   (d.) wherein the bank system interfaces with the remote customer terminal and the check clearing system to effectuate deposit of third party checks.
2. The system of claim 1, wherein the remote customer terminal is a telephone.
3. The system of claim 1, wherein the remote customer terminal is a facsimile machine.
4. The system of claim 1, wherein the remote customer terminal is a personal computer.
5. The system of claim 1, wherein the remote customer terminal is an automated teller machine.
6. The system of claim 1, wherein the remote customer terminal includes a keypad for data entry.
7. The system of claim 1, wherein the remote customer terminal includes a keyboard for data entry.
8. The system of claim 1, wherein the remote customer terminal includes a microphone for data entry.
9. The system of claim 1, wherein the remote customer terminal includes a magnetic ink character reader for data entry.
10. The system of claim 1, wherein the remote customer terminal includes a digital image scanner for data entry.
11. The system of claim 10, wherein optical character recognition software is used in conjunction with the digital image scanner to convert machine printed characters to electronic text.
12. The system of claim 10, wherein intelligent character recognition software is used in conjunction with the digital image scanner to convert handwritten characters to electronic text.
13. The system of claim 1, wherein the remote customer terminal includes a printer for printing receipts or marking checks.

14. The system of claim 1, wherein the remote customer terminal includes a vault for storing checks that were electronically deposited.
15. A method for allowing a bank customer to deposit paper checks from a remote location, comprising:
    (a.) receiving a check payable to the bank customer;
    (b.) remotely logging onto a bank system;
    (c.) entering transaction data to make a deposit; and
    (d.) receiving a result of the transaction.
16. The method of claim 15 wherein the result of the transaction is a credit to the bank customer's account.
17. The method of claim 15 wherein the result of the transaction is a provisional credit to the bank customer's account.
18. The method of claim 15 wherein the result of the transaction is denial.
19. The method of claim 15 wherein the result of the transaction includes marking a check to prevent redeposit.
20. The method of claim 15 wherein the result of the transaction includes physical capture of the paper check to prevent redeposit.
21. A method for allowing a bank to process check deposit transactions that are initiated by a bank customer at a remote location, comprising:
    (a.) receiving a request for authorization to make a transaction on the bank system;
    (b.) authorizing a bank customer as a user on the system;
    (c.) receiving transaction data related to the deposit of a check payable to the bank customer, where the payor is someone other than the customer; and
    (d.) processing the transaction.
22. The method of claim 21 wherein the transaction is processed via electronic funds transfer.
23. The method of claim 21 wherein the transaction is processed via electronic check presentment.
24. The method of claim 21 wherein the transaction is processed by printing a reconstructed check, and physically routing the reconstructed check to the paying bank for payment.

25. The method of claim 21 wherein the transaction is processed individually.
26. The method of claim 21 wherein the transaction is processed in batch.
27. The method of claim 24 wherein the reconstructed check is printed from an image of the check that was received by the bank customer.
28. The method of claim 21 wherein transaction processing includes marking the check to prevent redeposit.
29. The method of claim 21 wherein transaction processing includes physical capture of the check to prevent redeposit.

1/3

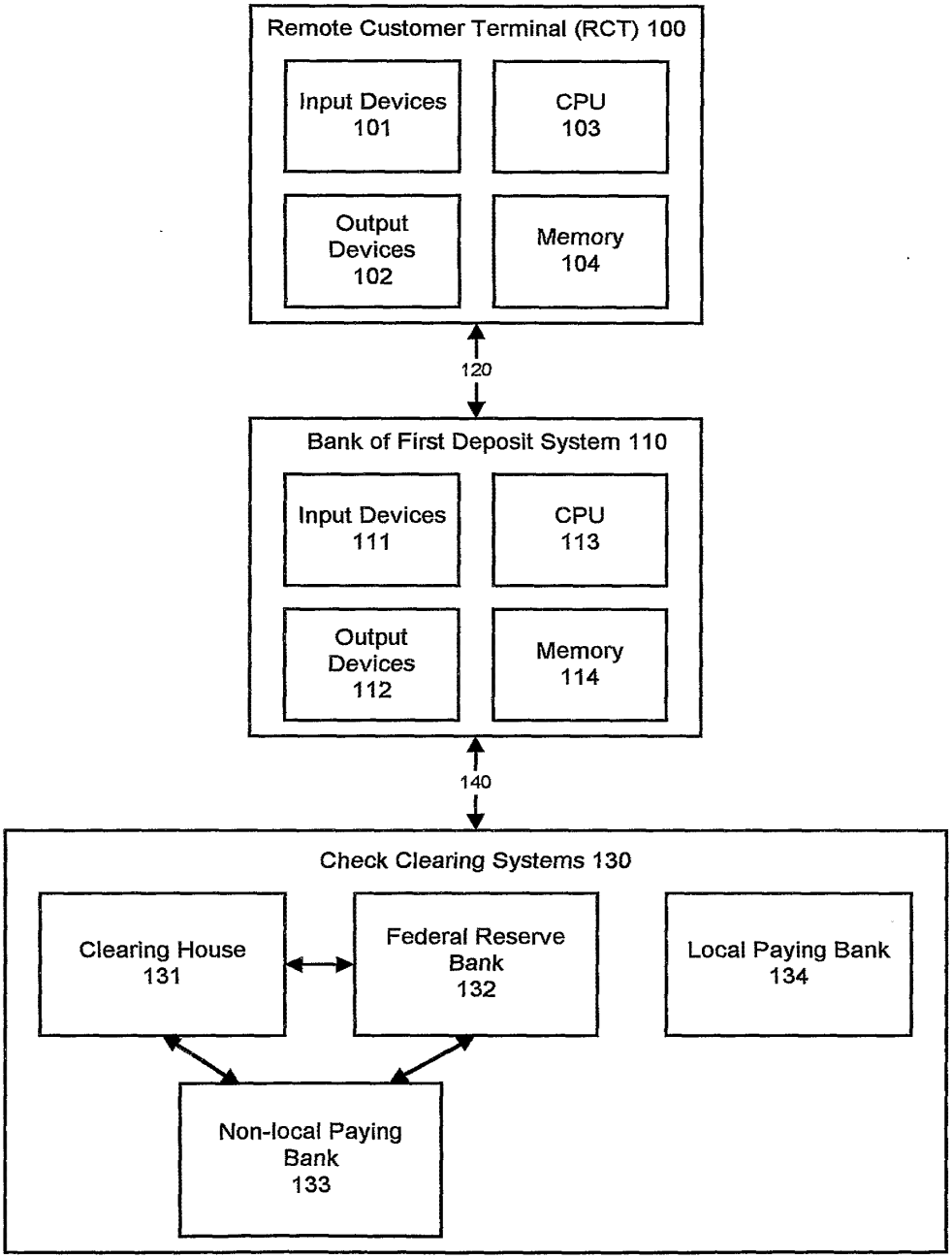
Remote Customer Terminal (RCT) 100
Input Devices 101
CPU 103
Output Devices 102
Memory 104
120
Bank of First Deposit System 110
Input Devices 111
CPU 113
Output Devices 112
Memory 114
140
Check Clearing Systems 130
Clearing House 131
Federal Reserve Bank 132
Local Paying Bank 134
Non-local Paying Bank 133

FIG. 1

2/3

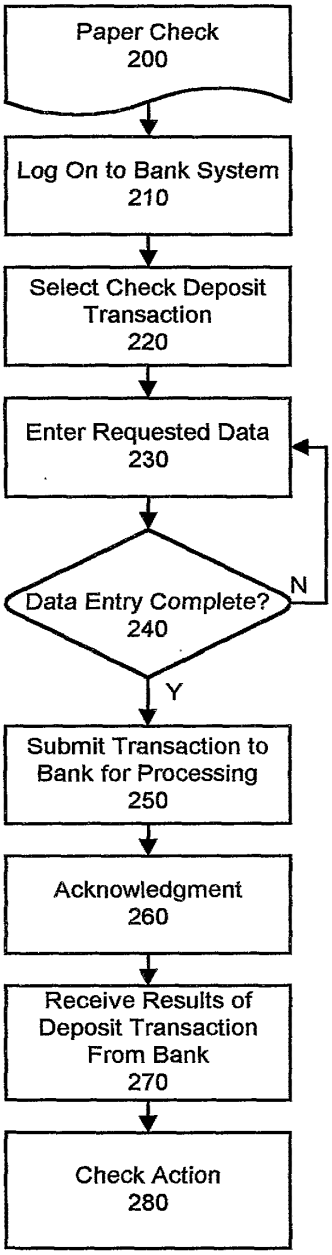
Paper Check
200
Log On to Bank System
210
Select Check Deposit Transaction
220
Enter Requested Data
230
Data Entry Complete?
240
N
Y
Submit Transaction to Bank for Processing
250
Acknowledgment
260
Receive Results of Deposit Transaction From Bank
270
Check Action
280

FIG. 2

3/3

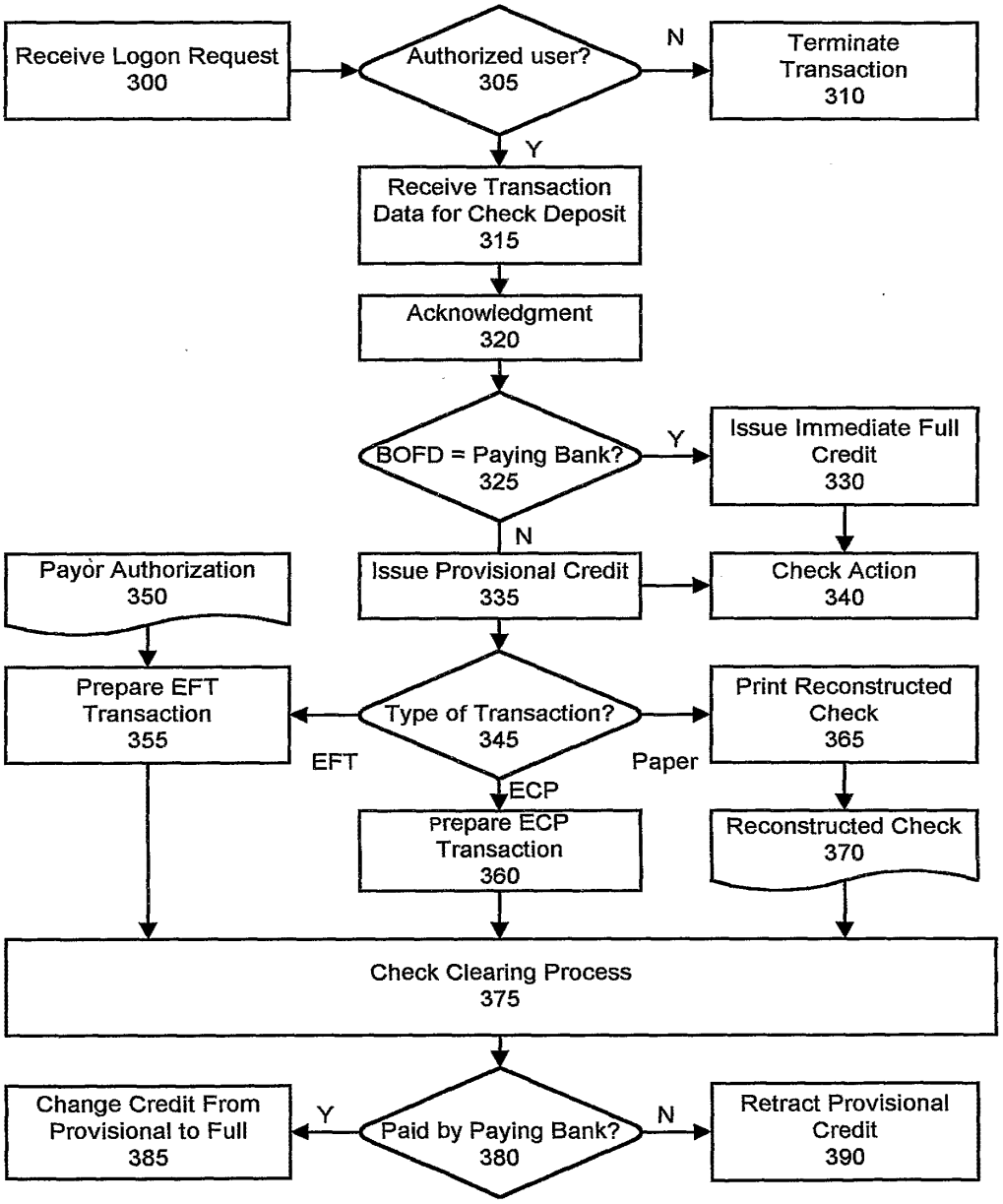
Receive Logon Request
300
Authorized user?
305
N
Terminate Transaction
310
Y
Receive Transaction Data for Check Deposit
315
Acknowledgment
320
BOFD = Paying Bank?
325
Y
Issue Immediate Full Credit
330
N
Payor Authorization
350
Issue Provisional Credit
335
Check Action
340
Prepare EFT Transaction
355
Type of Transaction?
345
Print Reconstructed Check
365
EFT
Paper
ECP
Prepare ECP Transaction
360
Reconstructed Check
370
Check Clearing Process
375
Change Credit From Provisional to Full
385
Y
Paid by Paying Bank?
380
N
Retract Provisional Credit
390

FIG. 3

BIG IP

Certificate of Accuracy

September 9, 2021

I, Christian Paul Scrogum, Translator at BIG IP, hereby certify that I translated the attached document from Spanish into English and that, to the best of my knowledge, it is a true and accurate translation.

I further certify that I am fluent in Spanish and English and qualified to translate this document.

All statements made of my own knowledge are true and all statements made on information and belief are believed to be true. I acknowledge that willful false statements and the like are punishable by fine or imprisonment, or both under 18 U.S.C. 1001.

The document is designated as:

- International Patent Publication No. WO 2005/043857 entitled "METHOD FOR THE TRANSMISSION, AUTHENTICATION AND AUTOMATIC PROCESSING OF DIGITISED DOCUMENTS"
- Article entitled "Deposit checks by mobile" on webpage https://www.elmundo.es/navegante/2005/07/21/empresas/1121957427.html

Signature of Christian Paul Scrogum

+1 646 813 4044 ▪ Hudson Yards 424 W. 33rd Street, Suite 700, New York, NY 10001 ▪ www.big-ip.com

(12) INTERNATIONAL APPLICATION PUBLISHED IN ACCORDANCE WITH THE PATENT COOPERATION TREATY (PCT)

(19) World Organization for Intellectual Property
International Bureau

(43) International publication date:
7 December 2006 (12/07/2006)

PCT

(10) International publication number:
WO 2005/043857 A1

(51) International patent classification[7]: H04L 29/00

(21) International file number:
PCT/ES2003/000558

(22) International application date:
30 October 2003 (2003-10-30)

(25) Language of filing: Spanish

(26) Language of publication: Spanish

(71) Applicants *(for all designated countries except US)*: **BANKINTER S.A. [ES/ES]**; Pº de la Castellana 29, E-28032 Madrid (ES). **RETEVISION MUNDIAL, S.A.** [ES/ES]; Avda. de Bruselas 26, E-28100 Alcobendas (ES).

(72) Inventors; and
(75) Inventors/applicants *(for US only)*: **RAMOS GARCIA-VERDUGO, Macarena** [ES/ES]; Castellana, 29, E-28032 Madrid (ES); **FERNANDEZ HERMOSILLA, Pilar** [ES/ES]; Castellana, 29, E-28032 Madrid (ES). **OLSON MAICAS, Carlos Alexis** [ES/ES]; Castellana, 29, E-28032 Madrid (ES). **BLANCO BEZANILLA, Olga** [ES/ES]; Avda. de Bruselas 26, E-28100 ALCOBENDAS (ES). **RODRIGUEZ DIAZ-PAVON, Luis** [ES/ES]; Avda. de Bruselas 26, E-28100 ALCOBENDAS (ES). **MASO BESAGA, Alvaro** [ES/ES]; Avda. de Bruselas 26, E-28100 ALCOBENDAS (ES).

[Continued on next page]

(54) Title: METHOD FOR THE TRANSMISSION, AUTHENTICATION AND AUTOMATIC PROCESSING OF DIGITISED DOCUMENTS

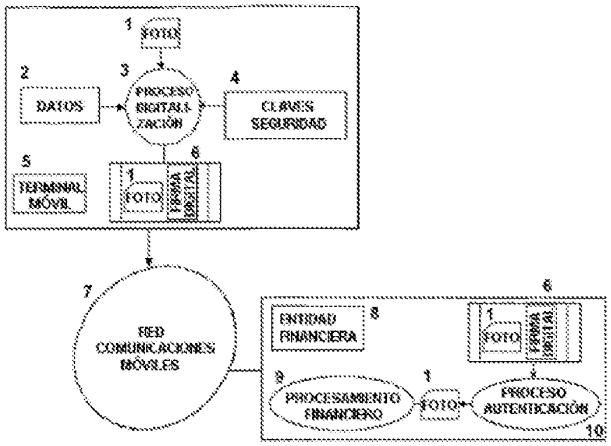

1 PHOTO
2 DATA
3 DIGITISATION PROCESS
4 SECURITY KEYS
5 MOBILE TERMINAL
6 DIGITAL SIGNATURE
7 MOBILE COMMUNICATION NETWORK
8 FINANCIAL INSTITUTION
9 FINANCIAL PROCESSING
10 AUTHENTICATION PROCESS

(57) Abstract: The invention relates to a method for the transmission, authentication and automatic processing of digitised documents in a single session, using a mobile device which is provided with the technological characteristics necessary for the aforementioned processes to be performed. The inventive method also comprises the recognition, verification and electronic processing of the information received by the receiving entity, which is incorporated automatically into the standard processing applied to the above-mentioned document(s). The method is particularly suitable for authenticating, transmitting and automatically processing financial and non-financial documents, such as bank cheques.

WO 2005/043857 A1

(74) **Attorney: URIZAR ANASAGASTI, Jesús, Ma**; Pº de la Castellana, 72-1º, E-28046 Madrid (ES).

(81) **Designated states** *(national)*: AE, AG, AL, AM, AT, AU, AZ, BA, BB, BG, BR, BY, BZ, CA, CH, CN, CO, CR, CU, CZ, DE, DK, DM, DZ, EC, EE, ES, FI, GB, GD, GE, GH, GM, HR, HU, ID, IL, IN, IS, JP, KE, KG, KP, KR, KZ, LC, LK, LR, LS, LT, LU, LV, MA, MD, MG, MK, MN, MW, MX, MZ, NI, NO, NZ, OM, PG, PH, PL, PT, RO, RS, RU, SC, SD, SE, SG, SK, SL, SY, TJ, TM, TN, TR, TT, TZ, UA, UG, US, UZ, VC, VN, YU, ZA, ZM, ZW.

(84) **Designated states** *(regional)*: ARIPO patent (BW, GH, GM, KE, LS, MW, MZ, NA, SD, SL, SZ, TZ, UG, ZM, ZW); Eurasian patent (AM, AZ, BY, KG, KZ, MD, RU, TJ, TM); European patent (AT, BE, BG, CH, CY, CZ, DE, DK, EE, ES, FI, FR, GB, GR, HU, IE, IT, LU, MC, NL, PL, PT, RO, SE, SI, SK, TR), OAPI patent (BF, BJ, CF, CG, CI, CM, GA, GN, GQ, GW, ML, MR, NE, SN, TD, TG).

Declaration according to Rule 4.17:

— *concerning the capacity as inventor (Rule 4.17(iv)), only for US*

Published:

— *with International Search Report*

For two-letter codes and other abbreviations, refer to the "Guidance Notes on Codes and Abbreviations" at the beginning of every regular issue of the PCT Gazette.

DESCRIPTION

Method for the transmission, authentication, and automatic processing of digitized documents.

Field of the Invention.

As its title indicates, the present invention relates to a method for the processing and admission of documents, such as bank checks, with a guarantee of the authentication of the issuer and of the document itself, the method being carried out using electronic means which comprise a mobile device that is capable of capturing and sending images via an internet connection.

Background of the Invention.

Electronic banking processes involve the use of digital data transmission techniques by electronic means and the processing thereof by the financial institution. In some cases, such as the issuance and collection of receipts through the internet, standards have been established that typify and standardize the files to be sent by the user to said institution. However, no progress has been made in those cases involving remittances in the form of bank checks, for example, and it is necessary in these cases to be present or for the physical documents to be sent to the corresponding bank branch for processing, either manually or using reader terminals that capture certain data from the real documents. No known teleprocessing system eliminates the need for physical presence and saves the document at the receiving institution

so as to make it possible to substantially accelerate the process for validating the document and the storage thereof by electronic means, with the consequent advantages of processing speed and the ability to store the documents.

The possibility of processing payments or collections or other transactions on a bank account using a telephone or other mobile terminal such as a PDA has been described in various documents, among which we highlight the following: DE10114237, JP2002197399, JP2001297198, WO9847116, WO9718653, WO9613814, WO9302424, EP0785534.

Document JP2002140499 is also known, which describes a system for executing various functions in real time through a portable telephone connected to the internet, where it displays menus and forms of an institution in order to perform various business-related functions using same.

Document FR2817107 describes an electronic signature procedure that is carried out by means of a mobile phone in order to thus enable its user to carry out financial transactions. Document EP0247788 refers to a system for storing and retrieving images of an object, basically the user's face, in order to later display them on a screen as a means of authenticating credit cards or the like.

Document WO9736254 describes an automatic check handling system that comprises a data entry device relating to the current account and the amount and a means for capturing a digitized image of the front side of the check that is sent electronically through a computer.

In summary, methodologies for the electronic processing of documents and other banking information have been described, but in none of them is the digital image of the document used for storage in computer systems or, together with previous computer systems, means for issuing data by the user and transmission thereof by means of a mobile phone or similar portable device.

Description of the Invention.

The present invention applies to the admission of documents, for example bank or financial documents, and preferably to the validation and depositing of checks into the existing account in a bank by means of a user's mobile device with a built-in camera that is capable of capturing and transmit digital images, in addition to performing normal telephone operations.

The method that is the object of the present invention is carried out in real time in an interactive session during which the user uses his mobile phone as a means for communicating and for transmitting a document to the receiving institution, which stores, processes, and – where appropriate – validates it automatically, communicating to the user whether or not it accepts the transaction performed. The following methodology is followed in this method:

a) Identifying the user who is initiating an interactive session with the receiving institution through the mobile communications operator.

b) Introducing various user recognition data, consisting of security keys for identification and authentication, which may be a secret number, an associated telephone number and its identification number (IMEI), as well as data associated with the document itself, such as the amount and/or number of the document.

c) Capturing at least one digital image of the document.

d) Digital encryption and certification of the data and/or images captured in the previous steps.

e) Once encrypted, transmission of the digital image and the recognition data to the institution that is to accept the document.

f) Immediate viewing of the digital image by the user.

g) Recognition, verification, and electronic handling and processing of the information received by said institution.

According to an important feature of the present invention, both the capturing of images, the introduction of data, the encryption thereof, and the transmission of data and images and other operations described in sections a), b), c), d), and e) are performed using a mobile device with a built-in digital camera that is capable of capturing and transmitting digital images, in addition to performing the usual telephone operations.

The data employed for user recognition consist of those that are specific to the mobile communications operator, such as: the mobile phone number, the number of the mobile device, and optionally a geolocation system and systems that are specific to the receiving institution, such as authentication keys consisting of a user identification and password, a secret number in any format. The union of all of these elements, logical and physical, implements a novel security mechanism by combining the identification and authentication elements of the receiving institution and of the mobile communications operator.

Throughout the process, there is constant communication between the user and the financial institution through the mobile communications operator.

With this system, greater simplicity, speed, and security are achieved in the process of admitting documents and bank items and particularly in the depositing of checks, replacing the traditional check reader with a multipurpose mobile device. The immediate processing of the information transmitted by this system and the electronic handling thereof allows for immediate availability in account for the user and eliminates manual mechanization by the institution, which thus reduces the labor required, since the truncation process is carried out by remote devices outside the financial institution. The user of this service avoids unnecessary trips to the bank branch to present their documents for collection and is immediately able to view the image in their account. In general, this system will facilitate the implementation of

electronic banking for carrying out the procedures for which it is intended.

For a better understanding of what is described in the present specification, some drawings are appended in which, by way of example, a practical embodiment according to the method proposed herein is represented. In said drawings:

Description of the Figures.

Fig. 1 shows a schematic of the execution of the method for the authentication and transmission of documents that is the object of this invention.

Fig. 2 shows the customary means used in this authentication method.

Preferred Embodiment of the Invention.

As can be seen in Fig. 1, the method for the admission of documents and bank notes with guarantee of origin, i.e., the identification and authentication of the issuer of the documents, requires the use of a mobile device by the user of the service, a mobile communications provider, as well as the services of computer equipment at the institution providing the service to the user.

The device required by the user must enable him to perform the following:

a) Identification of the user, for which purpose the user initiates a computer application on the mobile phone in which an interactive session is established with the receiving institution through the mobile communications operator.

b) Introduction by the user of various data for recognition, consisting of user name and password, and selection of the beneficiary company.

c) Identification of the device in relation to the user, verification of the associated telephone number and its identification number (IMEI).

d) Capturing of a digital image of the front and back of the document.

e) Collection of data associated with the document, such as the amount and the check number.

f) Digital encryption and certification of the data and/or images captured in the previous steps.

g) Once encrypted, transmission of the digital image and the recognition data to the institution that is to accept the document.

The mobile device that carries out the initial capture, digitization, and processing consists of a mobile telephone terminal that is equipped with the characteristics and

functionalities required for this purpose, particularly a mobile telephone with a camera and processing capacity.

For its part, the institution providing the service requires means for the electronic recognition, verification, and processing of the information sent by the user. These means are basically a computer device that is connected to the internet and has an optical recognition system (OCR), a key authentication system, and a means for transmitting data to the institution's document processing system. The receiving institution makes a digital image of the document available to the user in his bank account and processes the document he is handling by the usual means (truncation systems).

The communication link between each user and the institution consists of a mobile telephone telecommunications network, for example a GSM/GPRS network or any future technology with technological capabilities adapted to the present and future demands of the method of reference.

In a preferred embodiment, this method is applied to the authentication of the beneficiary of the bank check whose original document is digitized with a mobile device having a digital camera that is capable of obtaining a digital photograph of one or both sides thereof. Using the keyboard, the user enters the aforementioned identifying data, such as the amount of the check and all those data and keys that are necessary for the operation of the system, and then proceeds to send them. Once the message has been encrypted and accompanied by a digital certification, through the mobile network (GSM, GPRS, or any future technology) of a

telecommunications operator. The institution receiving the message proceeds to validate and encrypt it, finally obtaining a digital photograph of the check and a series of data that enable it to automatically process the depositing of said check into the account of the user of the service. Finally, the method provides for the transmission of an SMS message or any other method to the user indicating the successful or unsuccessful completion of the transaction and, where appropriate, the status of the transaction that was carried out, that is, whether it was accepted or rejected.

CLAIMS

1.- A method for the transmission, authentication, and automatic processing of digitized documents, for example financial and non-financial documents, **characterized in that** it comprises the following phases or stages:

a) Identification of the user initiating an interactive session with the receiving institution through the mobile communications operator.

b) Introduction of various user recognition data, consisting of security keys for identification and authentication, such as a secret number; recognition data of the mobile device, which may be an associated telephone number and its identification number (IMEI); and also data associated with the document itself, such as the amount and/or number of the document.

c) Capturing of at least one digital image of the document.

d) Digital encryption and certification of the data and/or images captured in the previous steps.

e) Once encrypted, transmission of the digital image and the recognition data to the institution that is to accept the document.

f) Immediate viewing of the digital image by the user.

g) The recognition, verification, handling, and electronic processing of the information received by said institution.

2.- The method according to claim 1, **characterized in that** both the capturing of images, the introduction of data, the encryption thereof, and the transmission of data and images and other operations described in sections a), b), c), d), and e) are performed using a mobile device with a built-in digital camera that is capable of capturing and transmitting digital images, in addition to performing the usual telephone operations.

3.- The method according to claims 1 and 2, **characterized in that** the data used for user recognition consist of those that are specific to the mobile communications operator, such as: the mobile phone number, the number of the mobile device, and optionally a geolocation system and systems that are specific to the receiving institution, such as authentication keys consisting of a user identification and password, a secret number in any format, so that the union of all of these elements, logical and physical, implements a security mechanism in combining the identification and authentication elements of the receiving institution and of the mobile communications operator.

4.- The method according to any of the preceding claims, **characterized in that** it is preferably applied to validation and depositing into a checking account in a bank directly by a user from his mobile phone through his mobile communications operator.

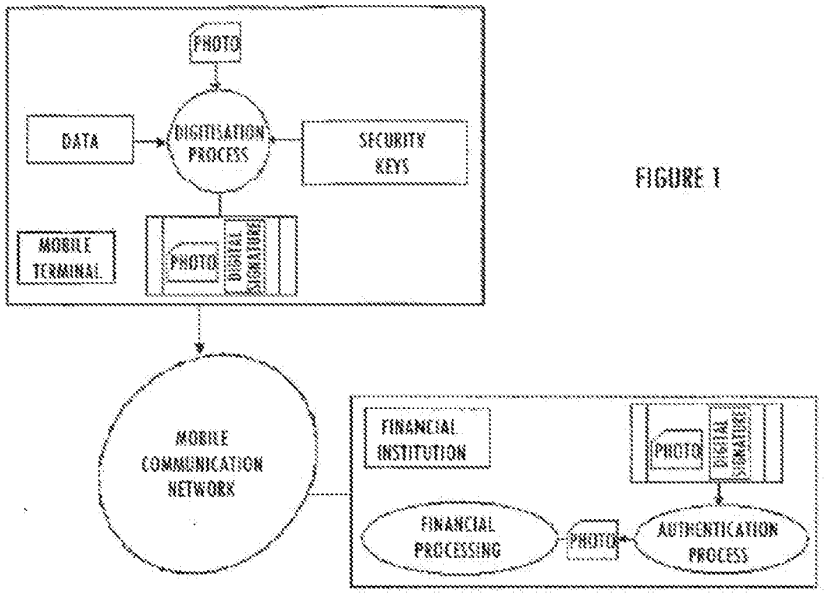

FIGURE 1

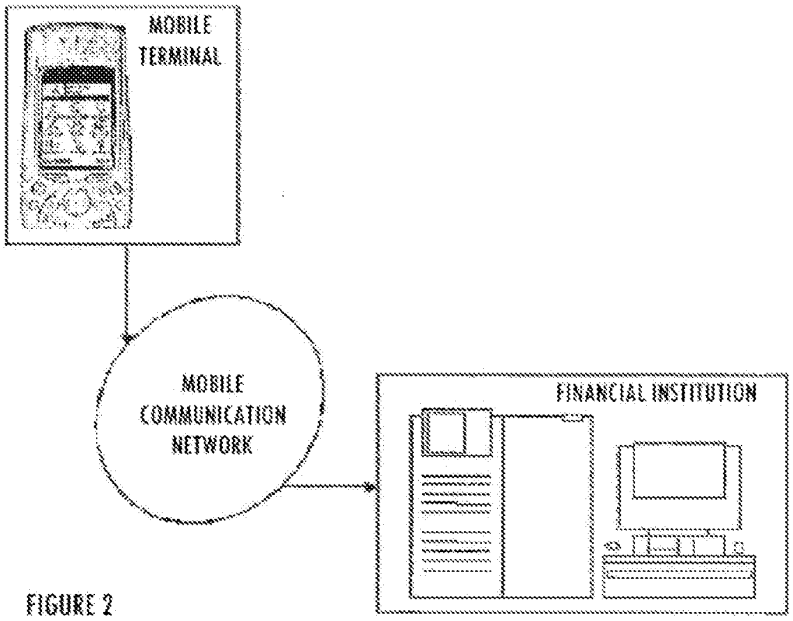

FIGURE 2

SUBSTITUTE SHEET (RULE 26)

[19] National Intellectual Property Administration of the People's Republic of China

[51] Int. Cl.

H04N 5/225 (2006.01)

[12] Specification of Invention Patent Application Publication

[21] Application No.200510081992.6

[43] Publication Date: January 17, 2007

[11] Publication No. CN 1897644A

[22] Application Date: July 15, 2005

[21] Application: No.200510081992.6

[71] Applicant: Motorola, Inc.

Address: Illinois, USA

[72] Inventors: Xiping Luo, Gang Peng, Lixin Zhen

[74] Patent Agency: China Sinda Intellectual Property Limited

Agent: Qixing Huang, Lina Xie

Two pages of Claims Eight pages of Specification

Four pages of Drawings

[54] Title of Invention

A method and system used to capture images

[57] Abstract

A method and system for capturing the frontal image of an object with at least two substantially straight edges (205) that helps reduce projective distortion in the image. This method includes receiving a preview image on the image sensor (115) of the camera (100), and the preview image depicts the straight edges (205). A preview image depicting the straight edges (205) and at least two coexisting reference lines (135) is then displayed in the preview window (125) associated with the camera system (100), where each reference line (135) corresponds to one straight edge (205). An image of an object is captured only when the straight edges (205) displayed in the preview window (125) are substantially parallel to the corresponding reference lines (135).

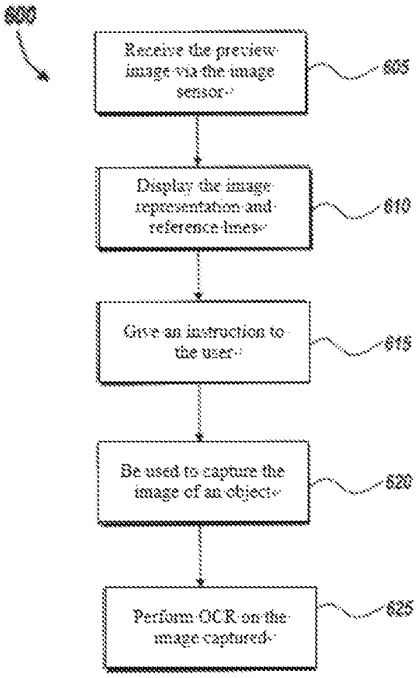

1. A method used to capture the frontal image of an object which has at least two substantially straight edges. Such method is comprised of:

Receiving a preview image on the image sensor of the camera, and said preview image depicts the straight edges;

Displaying the representation of a preview image in the preview window associated with the camera, and said preview image depicts the straight edges and at least two coexisting reference lines, with each reference line corresponding to one straight edge; and

It is used to capture the image of an object only when the straight edges displayed in the preview window are substantially parallel to the corresponding reference lines.

2. The method as described in claim 1, wherein at least three reference lines are displayed in said preview window.

3. The method as described in claim 1, wherein an image is automatically captured when the straight edges displayed in said preview window are substantially parallel to the corresponding reference lines.

4. The method as described in claim 1, wherein an image is captured only when the parallel straight edges displayed in said preview window are substantially of the same length and each straight edge is substantially parallel to the corresponding reference line.

5. The method as described in claim 1, further includes: Prior to capturing an object image, instruction is provided to users when the straight edges displayed in the preview window are substantially parallel to the corresponding reference lines.

6. The method as described in claim 1, is further comprised of performing optical character recognition on the object image captured.

7. The method as described in claim 1, wherein said reference lines are permanently overprinted on said preview window.

8. A camera system used to capture the frontal image of an object. Said object has at least two substantially parallel straight edges. Said camera system is comprised of:

An image sensor that is adapted to receive a preview image depicting straight edges; and

A preview window that is operationally connected to said image sensor and is adapted to display the representation of said preview image, while said preview image depicts the straight edges and at least two conexisting reference lines, with each reference line corresponding to one straight edge;

And, an object image is captured only when the straight edges displayed in said preview window are substantially parallel to the corresponding reference lines.

9. The system as described in claim 8, wherein at least three reference lines are displayed in said preview window.

10. The system as described in claim 8, wherein an image is automatically captured when the straight edges displayed in said preview window are substantially parallel to the corresponding reference lines.

11. The system as described in claim 8, wherein prior to capturing an object image, instruction is given to the user when the straight edges displayed in said preview window are substantially parallel to the corresponding reference lines.

12. The system as described in claim 8, wherein an object image is captured only when the parallel straight edges displayed in said preview window are substantially of the same length and each straight edge is substantially parallel to the corresponding reference line.

13. The system as described in claim 11, wherein said object is a business card and said instruction is comprised of a sound generator, light or an indicator displayed on said preview window.

14. The system as described in claim 8, wherein said reference lines are permanently overprinted on said preview window.

A method and system used to capture images

Field of Technology

The present invention generally relates to a method and system used to capture images using a digital camera, especially (but not exclusively) relates to a method and system used to capture images of documents such as business cards.

Background Art

Enhanced miniaturized digital camera technology has led to widespread use of digital cameras in a variety of handheld electronic devices, e.g., today's digital cameras are usually integrated into mobile phones, personal digital assistants (PDAs) and laptops. This ubiquitous availability of digital cameras has boosted many novel commercial applications for digital imaging. For example, businesspeople can use the digital cameras incorporated in mobile phones to capture digital images of business cards quickly and easily. Subsequently, optical character recognition (OCR) is performed on the digital images of the business cards, and the names, addresses and other information printed on the business cards are automatically saved in the contact file in mobile phones.

OCR can be defined as the process of converting text image data into character code format such as ASCII code that is readable by a text processing application software. In raw text image data, text characters are composed of individual pixels, just like other types of image data such as graphics and lines. After text characters are converted into character codes, the original images of the text characters are usually no longer available for editing and error correction of the conversion results. Therefore, OCR processing requires very high-quality single-character images in order to convert the images into special character codes.

However, many environments today where digital cameras are used are not ideal for capturing high-quality images. For example, when a digital camera user tries to capture an image of a business card, he or she simply holds the card casually in front of the camera lens with one hand while taking a photo of it with the camera in the other hand. In this senario, variables such as the distance from the lens to the business card and the angle of the camera's image plane relative to the front of the business card are not ideal, therefore, the resulted image may contain defects such as projective distortion.

Description of Drawings

In order to make the present invention easy to understand and in order to effectively putting it into practice, reference is made to exemplary embodiments shown in the accompanying drawings, wherein the same numbers represent the same or functionally similar components. The accompanying drawings, which are described in detail below and constitute a part of the specification, help to further illustrate the embodiments of the present invention and explain the various principles and strengths of the prevent invention, in which:

Fig. 1 shows the front-side schematic diagram for the camera system of an embodiment of the present invention.

Fig. 2 shows the back-side schematic diagram for the camera system of an embodiment of the present invention.

Fig. 3 shows the schematic diagram for the principle of projective distortion of an image.

Fig. 4 shows a business card image with significant projective distortion observed in the preview window of the camera system.

Fig. 5 is the schematic diagram for the preview window used to depict the preview image of a business card according to the embodiment of the present invention.

Fig. 6 shows the flow chart of the steps of the method for capturing the frontal image of an object based an embodiment of the present invention, where the object has at least two substantially straight edges.

Any proficient person skilled in the art would understand that it is unnecessary to draw to a certain scale in order to illustrate the elements in the Drawings simply and clearly. For example, for a better understanding of the embodiments of the present invention, some elements in the Drawings may be enlarged relative to others.

Detailed Implementation Method

Before describing the embodiments of the present invention in details, it should be noted that the embodiment mainly relates to the steps and device components of the method and system used to capture images. Therefore, such device components and steps are represented in the drawings by common symbols accordingly, and the drawings herein only show the specific details relevant to the understanding of the embodiments of the present invention in order to prevent the details that would be benefiting to the average people skilled in the art (however such details are easily understandable to the average people skilled in the art) from making this publication hard to understand.

In this document, related terms such as left and right, up and down, etc. are used only to distinguish one object or action from another object or action, without requiring or implying any actual relationship or order between such objects or actions. The terms "comprise" or "contain" or any of their variations thereof are intended to cover a non-exclusive inclusion so that a process, method, article or device comprised of a series of elements is not limited to only those elements described but also include other elements not specifically listed or elements inherent to such process, method, article or device. Without further constraints, prefacing an element with "comprising a..." does not exclude other identical elements in the process, method, item or device that comprises of such element.

As shown in Fig. 1, which is the schematic diagram for camera system 100 based on an embodiment of the present invention. Like most cameras, system 100 is comprised of a camera housing 105 with a frontside 110. Front side 110 contains an image sensor 115 adapted to receive images. Image sensor 115 may contain conventional lense(s) and optic(s) as well as digital image sensor(s), such as charge-coupled device (CCD) sensor(s), CMOS sensor(s), etc.

As shown in Fig. 2, which is the schematic diagram for backside 120 of camera system 100, backside 120 is comprised of a

preview window 125, which is suitable for displaying the representation of the image received by image sensor 115. Like many digital cameras, those skilled in the art should understand that preview window 125 can act as the viewfinder of a conventional camera and display in real time any moving images in the scene in front of image sensor 115. Typically, such real-time images displayed in preview window 125 are only transient and can only be captured into system 100's memory when the user activates the shutter button (not shown), timer or other image capture trigger mechanism. An embodiment of the present invention further contains mode selection switch 130, which can be used to set different shooting modes in camera system 100. For example, as in many devices with existing technology, mode selection switch 130 can be used to set system 100 to standard still image mode, video mode, low light mode and high speed mode, etc. In the present invention, mode selection switch 130 can also be used to set system 100 to document capture mode. When the mode selection switch 130 is set to document capture mode, reference line(s) 135 are displayed in preview window 125. Those skilled in the art should understand that mode selection switch 130 may be either a physical switch or trigger button on camera housing 105, or maybe, for example, a software switch that can enable preview window 125 to become activated. Inside housing 105, there is also processor 140 that is operationally connected to image sensor 115, preview window 125 and mode selection switch 130 to help control the interactions between these components and to process image data.

According to different embodiments of the present invention, reference lines 135 may be in various sizes, shapes, colors and formats, and may be either semi-transparent or non-transparent. During the time period reference line(s) 135 are used, reference line(s) 135 are used to guide the user of system 100 to position image sensor 115 at an appropriate position and orientation relative to the object such as a business card. Therefore, when using reference line(s) 135 for positioning, reference line(s) 135 are usually fixed relative to preview window 125. According to another embodiment of the present invention, reference line(s) 135 may be printed on preview window 125, or may be permanently overprinted on preview window 125 in another way.

As shown in Fig. 2, while implementing an embodiment of the present invention, the user often attempts to determine the frame of a document by determining the position of the reference line(s) 135 as follows: Make reference line(s) 135 to be substantially parallel to and adjacent to the straight edge(s) 205 of the document representation displayed in the preview window 125, or substantially parallel to and above the straight edge(s) 205. In such positioning, system 100 is designed to capture well-focused and clear document images. Such system has appropriate resolution, which makes OCR of any text printed in the document effective and reliable.

As shown in Fig. 3, which is the schematic diagram for the principle of image projective distortion, as understood by those skilled in the art. The illustrated light 305 propagates through lens 315 from object plane 310 to image plane 320. In the present invention, object plane 310 is equivalent to the surface of the object to be imaged, such as the surface of a business card, while lens 315 is equivalent to the component of image sensor 115 of camera system 100, and image plane 320 is equivalent to the image received, such as the preview image displayed in preview window 125 of system 100. When object plane 310 and image plane 320 cannot be substantially parallel, lens 315 causes the image depiction printed on object plane 310 to be distorted on image plane 320 through the known projective distortion process. For example, the shape of region "P" on the object plane can be magnified by lens 315 and is distorted into region "Q" of a different shape on the image plane

through projective distortion.

As shown in Fig. 4, which is a business card image with significant projective distortion observed in preview window 125 of camera system 100. Although the printed text on the left side of the business card remains clear and easy to read, the printed text displayed on the right side of the business card is blurry and not easy to read because the surface of the business card is tilted relative to image plane 320 of system 100. As known to those skilled in the art, the limited depth of field and projective distortion of camera system 100 make the right side of an image blurry.

The present invention can reduce the projective distortion of an image by ensuring that the frontal side of the object being imaged is substantially parallel to image plane 320 of camera system 100. For example, when system 100 is in document capture mode, the system provides the user with an image of the captured object, such as a business card, only when the straight edges 205 of the business card are substantially parallel to the corresponding reference lines 135 displayed in preview window 125.

As shown in Fig. 5, which is the schematic diagram for preview window 125 used to depict the preview image of a business card according to a specific embodiment of the present invention. For the purpose of illustration, the business card displayed is titled relative to image plane 320 of system 100, causing the top straight edge 205 of the business card cannot be substantially parallel to the corresponding top reference line 135. In such positioning, when system 100 operates in the document capture mode as described above, the system displays that object plane 310 and image plane 320 are not substantially parallel, therefore the final image of the business card cannot be captured. As it is well-known to those skilled in the art, image edge detection techniques can be used to reliably calculate the angle between a specific reference line 135 and the corresponding straight edge 205 in the preview image of a document. Fig. 5 shows three reference lines 135, but according to the disclosed information of the present invention, those skilled in the art should understand that different numbers of reference lines 135, such as two, three, four or more reference lines 135, may be used according to different embodiments of the present invention. In addition, all reference lines 135 do not necessarily need to be perpendicularly intersecting. Therefore, for example, camera system 100 may use three reference lines 135 arranged in a triangle shape to calibrate a triangular-shaped document.

A variety of technologies may be used to indicate to the user that an appropriate number of reference lines 135 are substantially parallel to the corresponding straight edges 205 of the object depicted in preview window 125. For example, An alarm composed of sound maybe provided, such as beeping sound from camera system 100. In the same way, it could be light illuminated in preview window 125 or light illuminated elsewhere in camera system 100. In addition, an image indicator may be displayed in preview window 125, for example, when each reference line 135 is substantially parallel to the corresponding straight edge 205, said reference line 135 may change color or flicker individually. As an alternative, when straight edge(s) 205 displayed in preview window 125 are substantially parallel to the corresponding reference line(s) 135, system 100 can automatically capture the selected image, with or without an instruction provided to the user.

According to another embodiment of the present invention, supplementary geometric calibration techniques may be used to measure whether object plane 310 is aligned with image plane 320. For example, the lengths of different straight edges 205

depicted in preview window 125 can be measured by using the standard image analysis techniques known to those skilled in the art. Based on the "vanishing point" effect, when one of the edges 205 is farther away from image sensor 115, the two relatively parallel straight edges 205 of a rectangular document have different lengths based on the two-dimensional image display. Therefore, in Fig. 5, the vertically straight edge 205 on the right side of the business card, which is farther from camera system 100, is shorter than the vertically straight edge 205 on the left side of the business card. Therefore, extra sensitivity is added in the embodiments of the present invention, wherein an image can be captured only when two parallel straight edges 205 of the object displayed in preview window 125 are substantially of the same length and substantially parallel to the corresponding reference lines 135.

Those skilled in the art should understand that the miniaturized digital camera technology enables camera housing 105, image sensor 115 and preview window 125 to be of almost any size, therefore the embodiments of the present invention can be incorporated into various types of electronic devices such as mobile phones, PDAs and laptops. Furthermore, reference lines 135 may be designed to coincide with straight edges 205 of objects of different types. For example, such objects may include paper objects of rectangular, triangular or other shapes, such as business cards, or other objects with straight edges 205 and a surface, where projective distortion can be reduced when the surface is positioned parallel to the orientation of image plane 320 of camera system 100.

As shown in Fig. 6, which is the flow chart of steps of the method for capturing the frontal image of an object according to an embodiment of the present invention, wherein the object has at least two substantially straight edges 205. First, in step 605, image sensor 115 of system 100 receives the preview image. The preview image depicts straight edges 205 of the object. As described above, the preview image is usually transient image, used to appropriately determine or calibrate the orientation of camera system 100 relative to the object plane. Subsequently, in step 610, the preview image representation, as displayed, depicts straight edges 205 in preview window 125 associated with camera system 100 and at least two coexisting reference lines 135, with each reference line 135 corresponding to one straight edge 205. According to an embodiment of the present invention, reference lines 135 are displayed in camera system 100 only after the user selects the document capture mode. Alternatively, the reference lines may be permanently overprinted on preview window 125. Next, in step 615, the user is provided an instruction when straight edges 205 displayed in preview window 125 are substantially parallel to the corresponding reference lines 135. In step 620, an image of the object is captured only when straight edges 205 displayed in preview window 125 are substantially parallel to the corresponding reference lines 135. Lastly, in step 625, OCR is performed on the captured image of the object.

Step 625 in method 600 maybe performed using the software stored in camera system 100, or alternatively, step 625 may be performed at a remote location. For example, camera system 100 may be used only to capture precise and clear text data image, which can be downloaded to another location prior to OCR is performed.

In summary, the present invention is an improved method and system for capturing the frontal image of an object that has at least two substantially straight edges 205. Embodiments of the present invention employ common features of camera system 100, such as mode selection switch 130 and preview window 125, to make it user-friendly and intuitive in use. Therefore, the

present invention helps users to accurately and reliably capture the frontal images of objects, where object plane 310 is substantially parallel to image plane 320. Therefore, projective distortion in images is reduced and images are clearer and more accurate. With reduced projective distortion, the likelihood of performing accelerated image capture process, such as performing OCR on text images, with high accuracy, is higher.

The above detailed descriptions merely provide exemplary embodiments and are not meant to limit the scope, applicability or construction of the present invention. On the contrary, detailed descriptions of the exemplary embodiments provide those skilled in the art with executable descriptions for implementing the exemplary embodiments of the present invention. It should be understood that within the spirit and scope of the present invention as set forth in the appended claims, various changes can be made to functions and configurations of components and to steps. It should also be understood that the embodiments described herein may consist of one or more conventional processors and uniquely stored program instructions controlling the operation of one or more processors, in combination with specific non-processor circuits. What is described herein applies to some, most or all of the functions for capturing the frontal image of an object. The non-processor circuits may include (but are not limited to) radio receivers, radio transmitters, signal drivers, clock pulse circuits, power supply circuits and user input devices. Similarly, these functions can be interpreted as steps of a method to perform capturing the frontal image of an object. Alternatively, some or all of these functions may be implemented by state machines without stored program instructions, or be implemented in one or more application-specific integrated circuits (ASIC), wherein each function or a combination of some specific functions are implemented as conventional logic circuits. Of course, both methods can be combined in use. Therefore, methods and devices are herein described to perform these functions. In addition, it is hoped that average technical personnel will be able to easily generate such software instructions, programs and IC's with minimum experimentation under the guidance of the principles and principles published herein, although great amount of efforts may need to be exerted, and based on considerations such as available time, current technology and financial considerations, a number of design choices can be inspired.

Although specific embodiments of the present invention have been described in the foregoing specification, average people skilled in the art should understand that various modifications and changes can be made to the present invention without departing beyond the scope of the present invention as set forth in the claims. Therefore, specifications and drawings should be deemed as explanations rather than limitations of the present invention, and all such modifications are intended to be included in the scope of the present invention. Neither benefits, advantages, solutions to problems, nor any elements which give rise to any benefits, advantages or solutions generating more significance or becoming more significant, shall be interpreted as important, necessary or essential features or elements of any or all claims. The present invention is defined solely by the appended claims, and contains any modifications made during the pending period of the application and all equivalents of those claims.

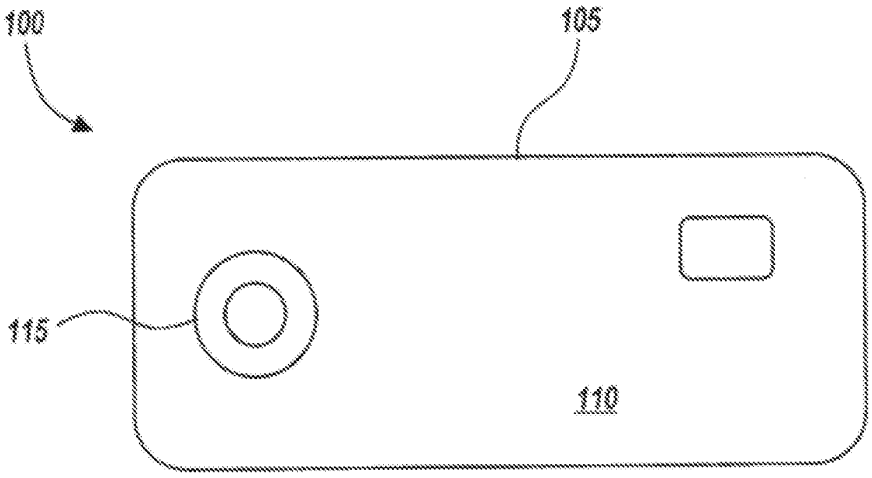

Fig. 1

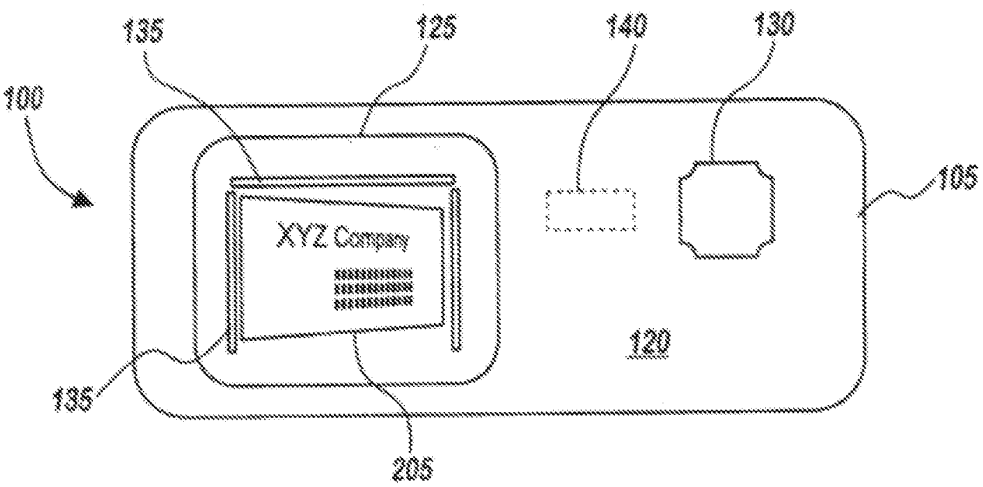

Fig. 2

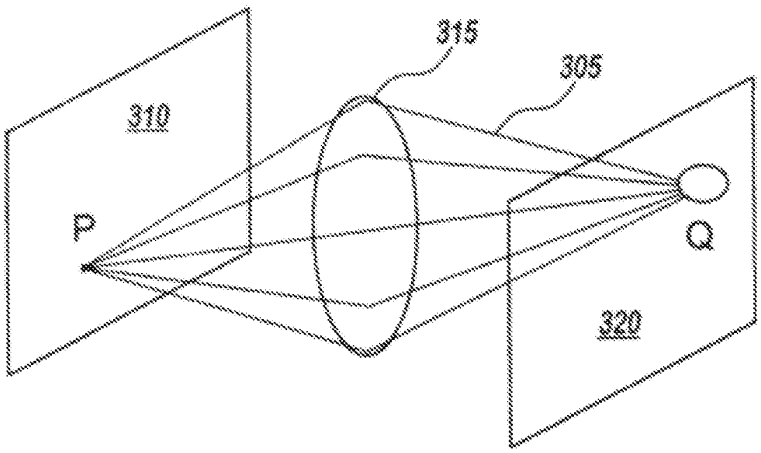

Fig. 3

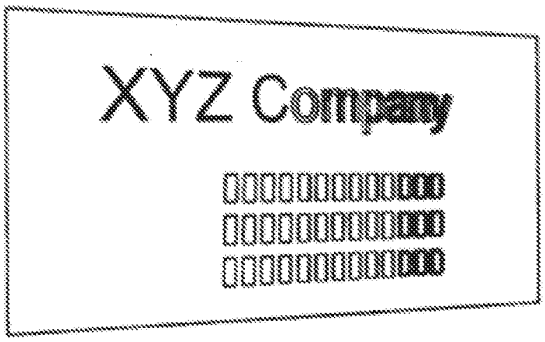

Fig. 4

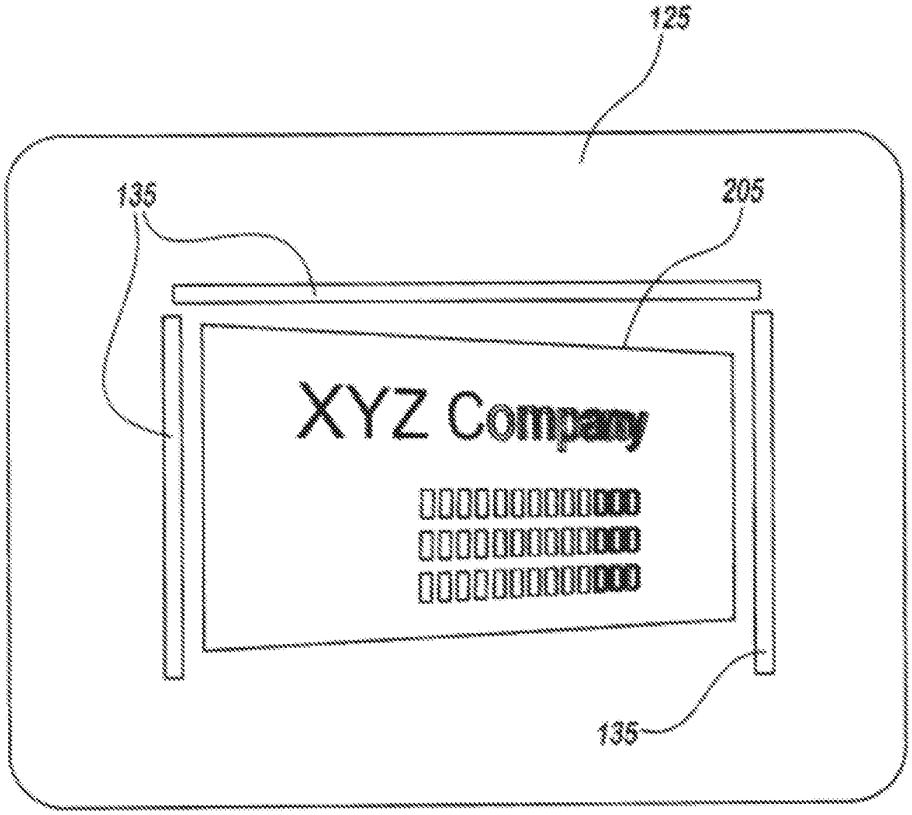

Fig. 5

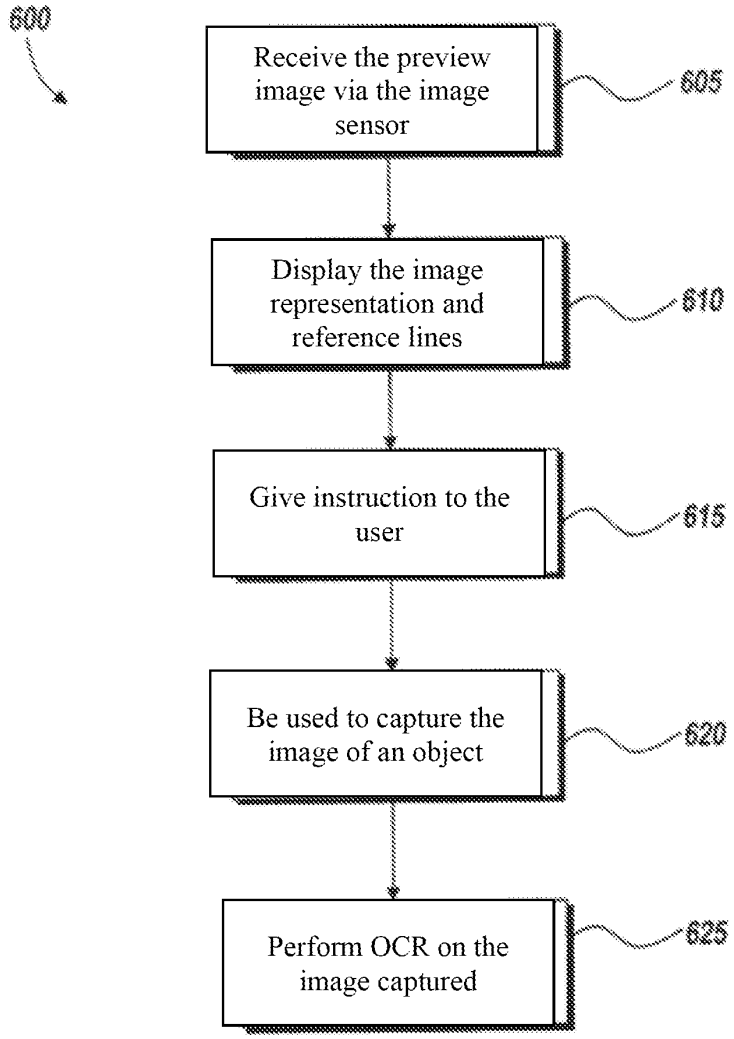
600
Receive the preview image via the image sensor
605
Display the image representation and reference lines
610
Give instruction to the user
615
Be used to capture the image of an object
620
Perform OCR on the image captured
625

Fig. 6

CERTIFICATE OF EFS FILING UNDER 37 CFR §1.8

I hereby certify that this correspondence is being electronically transmitted to the United States Patent and Trademark Office, Commissioner for Patents, via the EFS pursuant to 37 CFR §1.8 on the below date:

Date: October 4, 2021 Name: Scott W. Brim (Reg. No. 51,500) Signature: /Scott W. Brim/

INFORMATION DISCLOSURE STATEMENT BY APPLICANT (Not for submission under 37 CFR 1.99)	Application Number	16/507,595
	Filing Date	July 10, 2019
	First Named Inventor	Charles Lee Oakes
	Art Unit	3697
	Confirmation Number	4037
	Examiner Name	LIU, I JUNG
	Attorney Docket No.	US-0152.11 | 514538-5000668

In accordance with the duty of disclosure, Applicant(s) hereby cites the following references:

US PATENT REFERENCES

EXAMINER INITIAL		DOCUMENT NUMBER Number-Kind Code (if known)	DATE	NAME
	1	5,930,501 A	0727/1999	John M. Neil
	2	6,005,623 A	12/21/1999	Toshiya Takahashi
	3	6,195,452 B1	02/27/2001	George R. Royer
	4	2001/0030695	10/18/2001	Girish V. Prabhu et al.
	5	6,315,195	11/13/2001	Natarajan Ramachandrun
	6	2001/0051965 A1	12/13/2001	Didier Guillevic
	7	2002/0116335 A1	08/22/2002	Barry Star
	8	2002/0145035	10/10/2002	John E. Jones
	9	2002/0154815 A1	10/24/2002	Hiroyuki Mizutani
	10	2002/0172516	11/21/2002	Keisuke Aoyama
	11	2004/0010803 A1	01/15/2004	Viktors Berstis
	12	2004/0061913 A1	04/01/2004	Yuji Takiguchi
	13	2004/0066419	04/08/2004	Seppo Pyhalammi
	14	2004/0201695 A1	10/14/2004	Rei Inasaka
	15	2004/0217170	11/04/2004	Yuji Takiguchi et al
	16	2004/0238619 A1	12/02/2004	Nagasaka et al.
	17	2004/0267665	12/30/2004	Deok-Young Nam et al.
	18	2005/0034046 A1	02/10/2005	Jens Berkmann
	19	2005/0144131 A1	06/30/2005	Andy S. Aziz
	20	2005/0157174	07/21/2005	Kazuo Kitamura et al.
	21	2005/0205660	09/22/2005	Maximillian Munte
	22	2005/0238257 A1	10/27/2005	Kaneda et al.
	23	2006/0077941	04/13/2006	Meyyappan Alagappan et al.
	24	2006/0229987 A1	10/12/2006	John Thomas Leekley
	25	2006/0255124 A1	11/16/2006	Robert Hoch
	26	2007/0005467	01/04/2007	Christopher Haigh et al.
	27	2007/0130063 A1	06/07/2007	Ajay Kumar Jindia
	28	2008/0069427 A1	03/20/2008	Xu-Hua Liu
	29	2008/0140552 A1	06/12/2008	Andrew Blaikie
	30	2010/0008579 A1	01/14/2010	Evgeny P. Smimov
	31	2013/0155474	06/20/2013	John J. Roach et al.
	32	2013/0201534 A1	08/08/2013	Conrad Rhodes Carlen
	33	8, 818,033 B1	08/26/2014	Zongyi Liu
	34	10,956,879 B1	03/23/2021	Alexis M. Eidson
	35	11,030,752 B1	06/08/2021	Thomas Aaron Backlund
	36	11,042,940 B1	06/22/2021	Shanna Limas

Examiner Signature		Date Considered	

Information Disclosure Statement

EXAMINER INITIAL		DOCUMENT NUMBER Number-Kind Code (if known)	DATE	NAME
	37	11,042,941 B1	06/22/2021	Shanna Limas
	38	11,062,130 B1	07/13/2021	Reynaldo Medina III
	39	11,062,131 B1	07/13/2021	Reynaldo Medina III
	40	11,064,111 B1	07/13/2021	Bharat Prasad
	41	11,062,283 B1	07/13/2021	Bharat Prasad
	42	11,068,976 B1	07/20/2021	Teddy Voutour
	43	11,070,868 B1	07/20/2021	Maland Mortensen

FOREIGN PATENT REFERENCES

EXAMINER INITIAL		DOCUMENT NUMBER Number-Kind Code (if known)	DATE	COUNTRY	TRANSLATION YES OR NO
	44	WO 2005/043857	05/12/2005	WO	Yes
	45	WO 01/61436	08/23/2001	WO	
	46	EP 0984410	03/08/2000	WP	
	47	CN 1897644 A	01/17/2007	CN	Yes

OTHER ART – NON PATENT LITERATURE DOCUMENTS

EXAMINER INITIAL		Include name of author, title of the article (when appropriate), title of the item (book, magazine, journal, serial, symposium, catalog, etc.), date, page(s), volume-issue number(s), publisher, city and/or country where published.
	48	Andrew S. Tanenbaum, Modern Operating Systems, Second Edition (2001)
	49	Arnold et al, The Java Programming Language, Fourth Edition (2005)
	50	Consumer Assistance & Information – Check 21 https://www.fdic.gov/consumers/assistance/protection/check21.html (FDIC)
	51	Halonen et al., GSM, GPRS, and EDGE Performance: Evolution Towards 3G/UMTS, Second Edition (2003)
	52	Heron, Advanced Encryption Standard (AES), 12 Network Security 8 (2009)
	53	Immich et al., Performance Analylsis of Five Interprocess CommunicAtion Mechanisms Across UNIX Operating Systems, 68 J. Syss. & Software 27 (2003)
	54	Leach, et al., A Universally Unique Identifier (UUID) URN Namespace, (July 2005) retrieved from https://www.ietf.org/rfc/rfc4122.txt
	55	N. Ritter & M. Ruth, The Geo Tiff Data InterchAnge Standard for Raster Geographic Images, 18 Int. J. Remote Sensing 1637 (1997)
	56	Pbmplus – image file format conversion package, retrieved from https://web.archive.org/web/20040202224728/https:/www.acme.com/software/pbmplus/
	57	Petition filed by PNC Bank N.A. for Inter Partes Review of Claims 1-23 of Patent 10,482,432, dated July 14, 2021, IPR2021-01071, 106 pages
	58	Petition filed by PNC Bank N.A. for Inter Partes Review of Claims 1-7, 10-21 and 23 of Patent 10,482,432, dated July 14, 2021, IPR2021-01074
	59	Petition filed by PNC Bank N.A. for Inter Partes Review of Claims 1-18 of Patent 10,621,559, dated July 21, 2021, IPR2021-01076, 111 pages
	60	Petition filed by PNC Bank N.A. for Inter Partes Review of Claims 1-18 of Patent 10,621,559, filed July 21, 2021, IPR2021-01077; 100 pages
	61	Petition filed by PNC Bank N.A. for Inter Partes Review of Claims 1-30 of Patent 10,013,681, filed August 27, 2021, IPR2021-01381, 127 pages
	62	Petition filed by PNC Bank N.A. for Inter Partes Review of Patent 10,013,605, filed August 27, 2021, IPR2021-01399, 113 pages
	63	Readdle, Why Scanner Pro is Way Better Than Your Camera? (June 27, 2016) retrieved from https://readdle.com/blog/why-scanner-pro-is-way-better-than-your-camera

Examiner Signature		Date Considered	

EXAMINER INITIAL	Include name of author, title of the article (when appropriate), title of the item (book, magazine, journal, serial, symposium, catalog, etc.), date, page(s), volume-issue number(s), publisher, city and/or country where published.	
	64	Santomero, The Evolution of Payments in the U.S.: Paper vs. Electronic (2005) retrieved from https://web.archive.org/web/20051210185509/https://www.philadelphiafed.org/publicaffairs/speeches/2005_santomero9.html
	65	Schindler, Scanner Pro Review (Dec. 27, 2016) retrieved from https://www.pcmag.com/reviews/scAnner-pro
	66	Sing Li & Jonathan Knudsen, Beginning J2ME: From Novice to Professional, Third Edition (2005), ISBN (pbk): 1-59059-479-7, 468 pages
	67	Wang, Ching-Lin et al. "Chinese document image retrieval system based on proportion of black pixel area in a character image", the 6th International Conference on Advanced Communication Technology, 2004, Vol. 1, IEEE, 2004
	68	Zaw, Kyi Pyar and Zin Mar Kyu, "Character Extraction and Recognition for Myanmar Script Signboard Images using Block based Pixel Count and Chain Codes" 2018 IEEE/ACIS 17th International Conference on Computer and Information Science (CS), IEEE, 2018.
	69	Jung et al, "Rectangle Detection based on a Windowed Hough Transform", IEEE Xplore, 2004, 8 pgs.
	70	Craig Varream, "Image Deposit Solutions" Emerging Solutions for More Efficient Check Processing", November 2005, 16 pages.
	71	Certificate of Accuracy related to Article entitled, "Deposit checks by mobile" on webpage: https://www.elmundo.es/navegante/2005/07/21/empresas/1121957427.html signed by Christian Paul Scrogum (translator) on September 9, 2021.

1. PRIORITY INFORMATION:

☒ This application claims priority under 35 USC §120 to the following United States patent application(s): 16/165,622, 16/025,679, 15/663,284, 14/225,090 and 11/590,974. In accordance with 37 CFR §1.98(d), copies of the references cited herein which were submitted to, or cited by, the office, in compliance with 37 CFR §1.98(a)-(c) in the earlier application are not provided herewith. The Examiner is directed to those references cited in all Information Disclosure Statements filed in the priority United States patent application(s) cited above in addition to the references cited herein.

2. CERTIFICATIONS: (CHECK ALL THAT APPLY)

A. Certifications For 37 CFR §1.97(c) or 37 CFR §1.97(d):

☐ Applicant hereby certifies pursuant to 37 CFR §1.97(e)(1) that each item of information in this Information Disclosure Statement was first cited in any communication from a foreign patent office in a counterpart foreign application not more than three months prior to the filing of this Information Disclosure Statement.

☒ Applicant hereby certifies pursuant to 37 CFR §1.97(e)(2) that no item of information contained in this Information Disclosure Statement was cited in a communication from a foreign patent office in a counterpart foreign application, and, to the knowledge of the undersigned after making reasonable inquiry, no item of information contained in this Statement was known to any individual designated in 37 CFR §1.56(c), more than three months prior to the filing of this Information Disclosure Statement.

B. For Patent Term Adjustment Purposes:

☐ For purposes of 37 CFR §1.704(d)(i) or 37 CFR §1.704(d)(ii), Applicant is hereby submitting concurrently with this Information Disclosure Statement a completed Form PTO/SB/133 that certifies that each item of information contained in this Information Disclosure Statement was first cited in any communication from a patent office in a counterpart foreign or international application or from the Office or is a communication that was issued by a patent office in a counterpart foreign or international application or by the Office, and

Examiner Signature		Date Considered	

that this communication was not received by any individual designated in 37 CFR §1.56(c) more than thirty days prior to the filing of this Information Disclosure Statement.

3. FEE INFORMATION: (CHECK IF FEE REQUIRED)

☐ Applicant has calculated a processing fee in the amount of to be due under 37 CFR §1.17(p) in connection with the filing of this Information Disclosure Statement. Applicant authorizes charging the fee to our Stored Payment Method as selected in Financial Manager.

☒ The Director is hereby authorized to charge any fee deficiency associated with the filing of this Information Disclosure Statement to Deposit Account 50-4184.

Pursuant to the undersigned attorney's obligation and duties under 37 CFR §§ 1.56 and 1.98(a)(3) and (c), either English language abstracts, partial translations, or full translations are included for patent documents which are not in English for the express purpose of providing a concise explanation of the references to the Patent and Trademark Office with the opportunity to evaluate the same. Applicant respectfully requests the Examiner's consideration of the above reference(s) and entry thereof into the record of this application.
By submitting this Statement, Applicant is attempting to fully comply with the duty of candor and good faith mandated by 37 CFR §1.56. As such, this Statement is not intended to constitute an admission that any of the enclosed references, or other information referred to therein, constitutes "prior art" or is otherwise "material to patentability," as that phrase is defined in 37 CFR §1.56(a).

Respectfully submitted,

October 4, 2021
Date

/Scott W. Brim/
Scott W. Brim (Reg. No. 51,500)

Examiner Signature		Date Considered	

Electronic Acknowledgement Receipt

EFS ID:	43939831
Application Number:	16507595
International Application Number:	
Confirmation Number:	4037
Title of Invention:	DIGITAL CAMERA PROCESSING SYSTEM
First Named Inventor/Applicant Name:	Charles Lee Oakes
Customer Number:	16530
Filer:	Scott Wayne Brim/Jeffrey Skinner
Filer Authorized By:	Scott Wayne Brim
Attorney Docket Number:	US-0152.11(14538-668)
Receipt Date:	04-OCT-2021
Filing Date:	10-JUL-2019
Time Stamp:	16:10:58
Application Type:	Utility under 35 USC 111(a)

Payment information:

Submitted with Payment	no

File Listing:

Document Number	Document Description	File Name	File Size(Bytes)/ Message Digest	Multi Part /.zip	Pages (if appl.)
1	Transmittal Letter	514538-5000668_Transmittal.pdf	71859 04015a042ad3e5b0b1331fa3c18b8bc9432b4f8d	no	1

Warnings:

Information:					
2	Information Disclosure Statement (IDS) Form (SB08)	514538-5000668_IDS.pdf	136785 83fd8fe8038823ca4e95459bc01b4b80a2ac13bb	no	4
Warnings:					
Information:					
This is not an USPTO supplied IDS fillable form					
3	Foreign Reference	FPR_44_WO2005043857.pdf	4569926 39ab4c87fb7ad7ef69fabc68e108ab08d4c9c78f	no	15
Warnings:					
Information:					
4	Foreign Reference	FPR_45_WO0161436.pdf	607418 d72bf33e5740f63d642c5c835954738bb99e26d7	no	15
Warnings:					
Information:					
5	Foreign Reference	FPR_46_EP0984410.pdf	404704 f2715522b27ea01f087609b22e830c7dff9d10f9	no	24
Warnings:					
Information:					
6	Foreign Reference	FPR_47_CN1897644.pdf	11405808 01afac7dd8eaf966f5f21bcc98aede997d27336d	no	13
Warnings:					
Information:					
7	Non Patent Literature	NPL_48_Tanenbaum.pdf	24713616 266fbd226ff2d79acba1bafaf7a8d4756567fdc7	no	23
Warnings:					
Information:					
8	Non Patent Literature	NPL_49_Arnold.pdf	1506354 5955abcba7e224d4a26a9c1247c19b5fbac154bd	no	642
Warnings:					
Information:					

9	Non Patent Literature	NPL_50_Consumer_Information_Check_21.pdf	115973 455fee581c1eacd9a360662e3cee779222017fee	no	1
Warnings:					
Information:					
10	Non Patent Literature	NPL_51_Halonen.pdf	178873 ea01208c38fc77baebc5a2395bc4b23fdd00afe6	no	34
Warnings:					
Information:					
11	Non Patent Literature	NPL_52_Heron.pdf	4825649 c792bf4048fbabd411380d7aff179e850d04fa23	no	5
Warnings:					
Information:					
12	Non Patent Literature	NPL_53_Immich.pdf	453749 5d476c6072df342ab089ee3f92bab093e63b1903	no	17
Warnings:					
Information:					
13	Non Patent Literature	NPL_54_Leach.pdf	997180 652bdbf9080bec435f664dfee1e5039ed305b130	no	28
Warnings:					
Information:					
14	Non Patent Literature	NPL_55_Ritter.pdf	230430 82b1943ed327662edc4afcde0418c22094ccdbb6	no	12
Warnings:					
Information:					
15	Non Patent Literature	NPL_56_pbmplus.pdf	197095 21ede0cd966bfeb5d6d2a249c8d9d14260e2fb56	no	3
Warnings:					
Information:					

16	Non Patent Literature	NPL_57_PTAB-IPR2021-01071-4.pdf	1721599 09d61e970a1e521c60e1d9f473b0491748c4f874	no	106
Warnings:					
Information:					
17	Non Patent Literature	NPL_58_PTAB-IPR2021-01074-4.pdf	2099029 4e93dfea74ce16a6b155fad65bd5bcbd7282b5be	no	86
Warnings:					
Information:					
18	Non Patent Literature	NPL_59_PTAB-IPR2021-01076-4.pdf	1093780 f09b908be34348d031c23dd407ca9b5b090fd07a	no	111
Warnings:					
Information:					
19	Non Patent Literature	NPL_60_PTAB-IPR2021-01077-4.pdf	9373918 2fbd85ac5017ef30316a0f01f3f740d309e13e95	no	100
Warnings:					
Information:					
20	Non Patent Literature	NPL_61_PTAB-IPR2021-01381-3.pdf	2548624 d9d2fccd0d16395970d0fad3e2ffd777af16a731	no	127
Warnings:					
Information:					
21	Non Patent Literature	NPL_62_PTAB-IPR2021-01399-3.pdf	5607882 bf74602a887fa792ea627119a935efde6a8e7de6	no	113
Warnings:					
Information:					
22	Non Patent Literature	NPL_63_Readdle.pdf	1687129 2232437ba7d8097674d101e55a60a5dca5c7fa65	no	9
Warnings:					
Information:					

23	Non Patent Literature	NPL_64_Santomero.pdf	1626657 c74af1ec9f4e0561859c9b06e247f3f381dd7e11	no	8
Warnings:					
Information:					
24	Non Patent Literature	NPL_65_Schindler_Scanner.pdf	825745 88881095ea64d7ab55e88a70554cd44445b05294	no	12
Warnings:					
Information:					
25	Non Patent Literature	NPL_66_SingLl.pdf	7815706 03d0c63df0201769509eaa4cb85f9f8884ddbc14	no	468
Warnings:					
Information:					
26	Non Patent Literature	NPL_67_Wang.pdf	2898005 7ba89baabe573c8e07775837d1e7c95e9a548ba7	no	7
Warnings:					
Information:					
27	Non Patent Literature	NPL_68_Zaw.pdf	1023997 02a05b8fbe2e9997b384c7adcfbe19ceda166993	no	6
Warnings:					
Information:					
28	Non Patent Literature	NPL_69_Jung.pdf	414675 fa25a65b5ff98c868c3c0afde190aeda9f0b6f17	no	8
Warnings:					
Information:					
29	Non Patent Literature	NPL_70_Varream.pdf	6592512 1955c240c51d60dc1dfd1403c6ff757cc90c3c35	no	16
Warnings:					
Information:					

30	Non Patent Literature	NPL_71_Cert_Translation_Deposit_checks_by_Mobile.pdf	2857642 76a258a6769204310aca88d015384ac4c19c64eb	no	3
Warnings:					
Information:					
			Total Files Size (in bytes):	98602319	

This Acknowledgement Receipt evidences receipt on the noted date by the USPTO of the indicated documents, characterized by the applicant, and including page counts, where applicable. It serves as evidence of receipt similar to a Post Card, as described in MPEP 503.

New Applications Under 35 U.S.C. 111
If a new application is being filed and the application includes the necessary components for a filing date (see 37 CFR 1.53(b)-(d) and MPEP 506), a Filing Receipt (37 CFR 1.54) will be issued in due course and the date shown on this Acknowledgement Receipt will establish the filing date of the application.
National Stage of an International Application under 35 U.S.C. 371
If a timely submission to enter the national stage of an international application is compliant with the conditions of 35 U.S.C. 371 and other applicable requirements a Form PCT/DO/EO/903 indicating acceptance of the application as a national stage submission under 35 U.S.C. 371 will be issued in addition to the Filing Receipt, in due course.
New International Application Filed with the USPTO as a Receiving Office
If a new international application is being filed and the international application includes the necessary components for an international filing date (see PCT Article 11 and MPEP 1810), a Notification of the International Application Number and of the International Filing Date (Form PCT/RO/105) will be issued in due course, subject to prescriptions concerning national security, and the date shown on this Acknowledgement Receipt will establish the international filing date of the application.

CERTIFICATE OF EFS FILING UNDER 37 CFR §1.8

I hereby certify that this correspondence is being electronically transmitted to the United States Patent and Trademark Office, Commissioner for Patents, via the EFS pursuant to 37 CFR §1.8 on the below date:

Date: October 4, 2021 Name: Scott W. Brim (Reg. No. 51,500) Signature: /Scott W. Brim/

IN THE UNITED STATES PATENT AND TRADEMARK OFFICE

In re Appln. of:	Charles Lee Oakes		
Appln. No.:	16/507,595	Examiner:	LIU, I JUNG
Filed:	July 10, 2019	Art Unit:	3697
For:	DIGITAL CAMERA PROCESSING SYSTEM	Conf. No.:	4037
Attorney Docket No.:	US-0152.11 | 514538-5000668)		

TRANSMITTAL

Commissioner for Patents
PO Box 1450
Alexandria, VA 22313-1450

Sir:

Attached is/are:

☒ Information Disclosure Statement

Fee calculation:

☒ No additional fee is required.

☐ Per 37 CFR §1.27, ☐ Applicant is small entity ☐ Applicant is micro entity.

☐ An extension fee in an amount of $_____ for a _____-month extension of time under 37 CFR § 1.136(a).

☐ A petition or processing fee in an amount of $_____ under 37 CFR § 1.1_____(_____).

☐ An additional filing fee has been calculated as shown below:

					Fee		Small Entity Fee		Micro Entity Fee	
	Claims Remaining After Amendment		Highest No. Previously Paid	Present Extra	Rate	Add'l Fee	Rate	Add'l Fee	Rate	Add'l Fee
Total		Minus			x $100 =	$	x $ 50 =	$	x $25 =	$
Independent		Minus			x $480 =	$	x $240 =	$	x $120 =	$
First Presentation of Multiple Dep. Claim					+ $860 =	$	+ $430 =	$	+ $215 =	$
					Total	$	Total	$	Total	$

Fee payment:

☐ Please charge our Stored Payment Method as selected in Financial Manager in the amount of $_____ for _____.

☒ The Director is hereby authorized to charge payment of any additional filing fees required under 37 CFR § 1.16 and any patent application processing fees under 37 CFR § 1.17 (including any extension fee required to ensure that this paper is timely filed), or to credit any overpayment, to Deposit Account No. 50-4184

Respectfully submitted,

October 4, 2021
Date

/Scott W. Brim/
Scott W. Brim (Reg. No. 51,500)

CERTIFICATE OF EFS FILING UNDER 37 CFR §1.8

I hereby certify that this correspondence is being electronically transmitted to the United States Patent and Trademark Office, Commissioner for Patents, via the EFS pursuant to 37 CFR §1.8 on the below date:

Date: October 21, 2020 Name: Scott W. Brim (Reg. No. 51,500) Signature: /Scott W. Brim/

SUPPLEMENTAL INFORMATION DISCLOSURE STATEMENT BY APPLICANT (Not for submission under 37 CFR 1.99)		
	Application Number	16/507,595
	Filing Date	July 10, 2019
	First Named Inventor	Charles Lee Oakes
	Art Unit	3697
	Confirmation Number	4037
	Examiner Name	I. Jung Liu
	Attorney Docket No.	US-0152.11 | 14538-668

In accordance with the duty of disclosure, Applicant(s) hereby cites the following references:

PATENT REFERENCES

EXAMINER INITIAL		DOCUMENT NUMBER Number-Kind Code (if known)	DATE	NAME
	F1	6,697,091 B1	02/24/2004	Rzepkowski et al.
	F2	6,044,883 B1	09/13/2005	Abrahams
	F3	7,389,912 B2	06/24/2008	Starrs
	F4	8,341,077 B1	12/25/2012	Nichols et al.
	F5	10,713,629 B1	07/14/2020	Medina, III
	F6	10,719,815 B1	07/21/2020	Oakes, III et al.
	F7	10,769,598 B1	09/08/2020	Oakes, III et al.
	F8	2004/0205459 A1	10/14/2004	Green
	F9	2005/0100216 A1	05/12/2005	Myers et al.

FOREIGN PATENT REFERENCES

EXAMINER INITIAL		DOCUMENT NUMBER Number-Kind Code (if known)	DATE	COUNTRY	TRANSLATION YES OR NO
	F10	WO 2005/124657 A1	12/29/2005	WIPO	

OTHER ART – NON PATENT LITERATURE DOCUMENTS

EXAMINER INITIAL		Include name of author, title of the article (when appropriate), title of the item (book, magazine, journal, serial, symposium, catalog, etc.), date, page(s), volume-issue number(s), publisher, city and/or country where published.
	F11	Higgins, Ray et al., "Working With Image Cash Letters (ISLs) X9.37, 180 or 187 files", *All My Papers*, 2009, 36 pgs.
	F12	X9.100-180, "The New ICL Standard is Published", *All My Papers*, 2006, 3 pgs.
	F13	X9.37 Specifications | X9Ware LLC, dated 2018, 3 pgs.
	F14	"Getting Started with ICLs aka X9.37 Files", *All My Papers*, 5/2/2006, 39 pgs.
	F15	Federal Reserve Banks Plan Black-and-White Image Standard and Quality Checks, May 2004, 2 pgs.
	F16	Caplan, J. et al., :Most Influential Gadgets and Gizmos 2002: Sanyo SCP-5300", 2002, 1 pg.
	F17	Hill, "From J-Phone to Lumina 1020: A complete history of the camera phone", *Digital Trends*, 2020, 9 pgs.
	F18	Hoffman, J., "Before there Were Smartphones, There was I-Mode", 1999, 5 pgs.
	F19	"Vodafane calls on mobiles to go live!", 2002, 8 pgs.

Examiner Signature		Date Considered	

EXAMINER INITIAL	Include name of author, title of the article (when appropriate), title of the item (book, magazine, journal, serial, symposium, catalog, etc.), date, page(s), volume-issue number(s), publisher, city and/or country where published.	
	F20	"Sprint PCS Vision Guide", 2005, 86 pgs.
	F21	FDIC – Remote Capture: A Primer, 2009, 3 pgs.
	F22	Callaham, J., "The first camera phone was sold 20 years ago, and it's not what you expect", *Android Authority*, 2019, 5 pgs.
	F23	Fujisawa, H. et al., "Information Capturing Camera and Developmental Issues", *IEEE Xplore*, downloaded on Aug. 18, 2020, 4 pgs.
	F24	Rohs, M. et al., "A Conceptual Framework for Camera Phone-based Interaction Techniques", *Swiss Federal Institute of Technology*, Zurich, Switzerland, 10 pgs.
	F25	Koga, M. et al., "Camera-based Kanji OCR for Mobile-phones: Practical Issues, *IEEE*, 2005, 5 pgs.
	F26	Parikh, T., "Using Mobile Phones for Secure, Distributed Document Processing in the Developing World", *IEE Persuasive Computing*, Vol. 4, No. 2, 2005, 9 pgs.
	F27	Parikh, T., "Mobile Phones and Paper Documents: Evaluating a New Approach for Capturing Microfinance Data in Rural India", *CHI 2006 Proceedings*, 2006, 10 pgs.
	F28	Magid, L., "A baby girl and the camera phone were born 20 years ago", Mercury News, 2017, 3 pgs.
	F29	Liang, J. et al., "Camera-based analysis of text and documents: a survey", *IJDAR*, Vol. 7, 2005, pp 84-104, 21, pgs.
	F30	Gutierrez, L., "Innovation: From Campus to Startup", *Business Watch*, 2008, 2 pgs.
	F31	Doermann, D. et al., "The function of documents", *Image and Vision Computing*, Vol. 16, 1998, pp 799-814.
	F32	Mirmehdi, M. et al., "Towards Optimal Zoom for Automatic Target Recognition", in PROCEEDINGS of the SCANDINAVIAN CONFERENCE on IMAGE ANALYSIS, 1:447-454, 1997, 7 pgs.
	F33	Mirmehdi, M. et al., "Extracting Low Resolution Text with an Active Camera for OCR", in PROCCEDINGS OF THE IX SPANISH SYMPOSIUM ON PATTERN RECOGNITION AND IMAGE PROCESSING (pp 43-48), 2001, 6pgs.
	F34	Zandifar, A. et al., "A Video Based Interface To Textual Information For The Visually Impaired", *IEEE 17th INTERNATIONAL SYMPOSIUM ON PERSONAL, INDOOR AND MOBILE RADIO COMMUNICATIONS,* 1-5, 2002, 6 pgs.
	F35	Laine, M. et al., "A Standalone OCR System For Mobile Cameraphones", *IEEE*, 2006, 5 pgs.
	F36	Federal Reserve Bank, "Reserve Banks to Adopt DSTU X9.37-2003 Format for Check 21 Image Services", 2004, 2 pgs.
	F37	Dhandra, B.V. et al., "Skew Detection in Binary Image Documents Based on Image Dilation and Region labeling Approach", *IEEE*, The 18th International Conference on Pattern Recognition (ICPR'06), 2006, 4 pgs.
	F38	PNC Bank to Offer Ease of Online Deposit Service Integrated with QuickBooks to Small Business", RemoteDepositCapture.com, July 24, 2006, 2 pgs.

1. PRIORITY INFORMATION:

☒ This application claims priority under 35 USC §120 to the following United States patent application(s): 16/025,679. In accordance with 37 CFR §1.98(d), copies of the references cited herein which were submitted to, or cited by, the office, in compliance with 37 CFR §1.98(a)-(c) in the earlier application are not provided herewith. The Examiner is directed to those references cited in all Information Disclosure Statements filed in the priority United States patent application(s) cited above in addition to the references cited herein.

Examiner Signature		Date Considered	

2. CERTIFICATIONS: (CHECK ALL THAT APPLY)

A. Certifications For 37 CFR §1.97(c) or 37 CFR §1.97(d):

☐ Applicant hereby certifies pursuant to 37 CFR §1.97(e)(1) that each item of information in this Information Disclosure Statement was first cited in any communication from a foreign patent office in a counterpart foreign application not more than three months prior to the filing of this Information Disclosure Statement.

☒ Applicant hereby certifies pursuant to 37 CFR §1.97(e)(2) that no item of information contained in this Information Disclosure Statement was cited in a communication from a foreign patent office in a counterpart foreign application, and, to the knowledge of the undersigned after making reasonable inquiry, no item of information contained in this Statement was known to any individual designated in 37 CFR §1.56(c), more than three months prior to the filing of this Information Disclosure Statement.

B. For Patent Term Adjustment Purposes:

☐ For purposes of 37 CFR §1.704(d)(i) or 37 CFR §1.704(d)(ii), Applicant is hereby submitting concurrently with this Information Disclosure Statement a completed Form PTO/SB/133 that certifies that each item of information contained in this Information Disclosure Statement was first cited in any communication from a patent office in a counterpart foreign or international application or from the Office or is a communication that was issued by a patent office in a counterpart foreign or international application or by the Office, and that this communication was not received by any individual designated in 37 CFR §1.56(c) more than thirty days prior to the filing of this Information Disclosure Statement.

3. FEE INFORMATION: (CHECK IF FEE REQUIRED)

☐ Applicant has calculated a processing fee in the amount of _____ to be due under 37 CFR §1.17(p) in connection with the filing of this Information Disclosure Statement. Applicant authorizes charging the fee to Deposit Account 50-4184.

☒ The Director is hereby authorized to charge any fee deficiency associated with the filing of this Information Disclosure Statement to Deposit Account 50-4184.

Pursuant to the undersigned attorney's obligation and duties under 37 CFR §§ 1.56 and 1.98(a)(3) and (c), either English language abstracts, partial translations, or full translations are included for patent documents which are not in English for the express purpose of providing a concise explanation of the references to the Patent and Trademark Office with the opportunity to evaluate the same. Applicant respectfully requests the Examiner's consideration of the above reference(s) and entry thereof into the record of this application.

By submitting this Statement, Applicant is attempting to fully comply with the duty of candor and good faith mandated by 37 CFR §1.56. As such, this Statement is not intended to constitute an admission that any of the enclosed references, or other information referred to therein, constitutes "prior art" or is otherwise "material to patentability," as that phrase is defined in 37 CFR §1.56(a).

Respectfully submitted,

October 21, 2020
Date

/Scott W. Brim/
Scott W. Brim (Reg. No. 51,500)

Examiner Signature		Date Considered	

Electronic Acknowledgement Receipt

EFS ID:	40903052
Application Number:	16507595
International Application Number:	
Confirmation Number:	4037
Title of Invention:	DIGITAL CAMERA PROCESSING SYSTEM
First Named Inventor/Applicant Name:	Charles Lee Oakes
Customer Number:	16530
Filer:	Scott Wayne Brim/Jeffrey Skinner
Filer Authorized By:	Scott Wayne Brim
Attorney Docket Number:	US-0152.11(14538-668)
Receipt Date:	21-OCT-2020
Filing Date:	10-JUL-2019
Time Stamp:	12:58:26
Application Type:	Utility under 35 USC 111(a)

Payment information:

Submitted with Payment	no

File Listing:

Document Number	Document Description	File Name	File Size(Bytes)/ Message Digest	Multi Part /.zip	Pages (if appl.)
1	Transmittal Letter	14538-668-Trans-Brim-c.pdf	87600 98e171ab974be5bb4c1f5a7e9a72138ca2c590ad	no	1

Warnings:

Information:					
2	Information Disclosure Statement (IDS) Form (SB08)	14538-668-Rev_Suppl_IDS-Brim-c.pdf	161299 9e22d5ec972baca2091ea8c535318ec389e66795	no	3
Warnings:					
Information:					
This is not an USPTO supplied IDS fillable form					
			Total Files Size (in bytes):	248899	

This Acknowledgement Receipt evidences receipt on the noted date by the USPTO of the indicated documents, characterized by the applicant, and including page counts, where applicable. It serves as evidence of receipt similar to a Post Card, as described in MPEP 503.

New Applications Under 35 U.S.C. 111
If a new application is being filed and the application includes the necessary components for a filing date (see 37 CFR 1.53(b)-(d) and MPEP 506), a Filing Receipt (37 CFR 1.54) will be issued in due course and the date shown on this Acknowledgement Receipt will establish the filing date of the application.
National Stage of an International Application under 35 U.S.C. 371
If a timely submission to enter the national stage of an international application is compliant with the conditions of 35 U.S.C. 371 and other applicable requirements a Form PCT/DO/EO/903 indicating acceptance of the application as a national stage submission under 35 U.S.C. 371 will be issued in addition to the Filing Receipt, in due course.
New International Application Filed with the USPTO as a Receiving Office
If a new international application is being filed and the international application includes the necessary components for an international filing date (see PCT Article 11 and MPEP 1810), a Notification of the International Application Number and of the International Filing Date (Form PCT/RO/105) will be issued in due course, subject to prescriptions concerning national security, and the date shown on this Acknowledgement Receipt will establish the international filing date of the application.

CERTIFICATE OF EFS FILING UNDER 37 CFR §1.8

I hereby certify that this correspondence is being electronically transmitted to the United States Patent and Trademark Office, Commissioner for Patents, via the EFS pursuant to 37 CFR §1.8 on the below date:

Date: October 21, 2020 Name: Scott W. Brim (Reg. No. 51,500) Signature: /Scott W. Brim/

IN THE UNITED STATES PATENT AND TRADEMARK OFFICE

In re Appln. of:	Charles Lee Oakes et al.		
Appln. No.:	16/507,595	Examiner:	I.Jung Liu
Filed:	July 10, 2019	Art Unit:	3697
For:	DIGITAL CAMERA PROCESSING SYSTEM	Conf. No.:	4037
Attorney Docket No.:	US-0152.11 | 14538-668		

TRANSMITTAL

Mail Stop Amendment
Commissioner for Patents
PO Box 1450
Alexandria, VA 22313-1450

Sir: **Attached is/are**:

☒ Supplemental Information Disclosure Statement (3 pgs).

Fee calculation:

☒ No additional fee is required.

☐ Per 37 CFR §1.27, ☐ Applicant is small entity ☐ Applicant is micro entity.

☐ An extension fee in an amount of $_____ for a _____-month extension of time under 37 CFR § 1.136(a).

☐ A petition or processing fee in an amount of $___ under 37 CFR § 1.1_____(___).

☐ An additional filing fee has been calculated as shown below:

					Fee		Small Entity Fee		Micro Entity Fee	
	Claims Remaining After Amendment		Highest No. Previously Paid	Present Extra	Rate	Add'l Fee	Rate	Add'l Fee	Rate	Add'l Fee
Total		Minus			x $100 =	$	x $ 50 =	$	x $25 =	$
Independent		Minus			x $480 =	$	x $240 =	$	x $120 =	$
First Presentation of Multiple Dep. Claim					+ $860 =	$	+ $430 =	$	+ $215 =	$
					Total	$	Total	$	Total	$

Fee payment:

☐ Please charge our Stored Payment Method as selected in Financial Manager Deposit Acct. No. 50-4184 in the amount of $_____ for _____.

☒ The Director is hereby authorized to charge payment of any additional filing fees required under 37 CFR § 1.16 and any patent application processing fees under 37 CFR § 1.17 (including any extension fee required to ensure that this paper is timely filed), or to credit any overpayment, to Deposit Account No. 50-4184.

Respectfully submitted,

October 21, 2020
Date

/Scott W. Brim/
Scott W. Brim (Reg. No. 51,500)

BRINKS GILSON & LIONE
NBC Tower – Suite 3600, 455 N. Cityfront Plaza Drive, Chicago, IL 60611-5599

Print | Close

Patent Record Full View Tuesday, May 19 2020 Derwent Innovation

PATENT/PUBLICATION:JP2004023158A

Key summary data

Patent	Dead	**Publication date**	2004-01-22
DWPI family	Dead	**Expiration date**	-
INPADOC family	Dead	**Remaining life**	-
Original assignee	SHARP CORP	**Domain Influence**	
Optimized assignee	SHARP CORP	**Strategic Importance**	
Ultimate parent	HON HAI PRECISION INDUSTRY CO. LTD.(ALSO KNOWN AS FOXCONN]	**Combined Patent Impact**	

Bibliography

DWPI title

Camera built-in personal digital assistant, determines whether state of photographed image is suitable for image recognition based on which image storage is controlled

Original Title

PICTURE IMAGING UNIT

Image-pickup apparatus ***(Translation from Clarivate Analytics)***

English Title

PICTURE IMAGING UNIT

Assignee/Applicant

Standardized: SHARP KK

Original: SHARP CORP

DWPI Assignee/Applicant

SHARP KK (SHAF-C)

Inventor

TAKEHARA KAZUHIRO,
TAKEHARA KAZUHIRO,

DWPI Inventor

TAKEHARA K

Publication date (Kind Code)

2004-01-22 (A)

DWPI accession / Update

2004-173349 / 200417

Application number / Date

JP2002171616A / 2002-06-12

Priority number / Date / Country code

JP2002171616A / 2002-06-12 / JP

Abstract

DWPI abstract

(JP2004023158A_)

Novelty

A judgment unit (102) determines whether the state of the image photographed by an image input unit (101) is suitable for image recognition, based on storage conditional information. The state of the image is reported based on the determination result, and the photographed image is stored in a memory (104).

Use

Camera built-in personal digital assistant (PDA), mobile telephone.

Advantage

Enables the user to adjust the photography state suitable for image recognition, easily.

Drawing description

The figure shows a block diagram of the camera. (Drawing includes non-English language text).
101 - image input unit.
102 - storage condition judgment unit.
103 - report unit.
104 - memory.
105 - image input instruction unit.
106 - control unit.

Abstract

PROBLEM TO BE SOLVED: To provide a picture imaging unit enabling a user to easily adjust a photographing state suitable for picture recognition and to easily obtain a picture in good state that the picture can be recognized.
SOLUTION: A storage condition determining part 102 determines whether the state of a picture imaged by a picture inputting part 101 is a picture suitable to picture recognition on the basis of storage condition information for storing pictures suitable for picture recognition. Whenever the picture inputting part 101 images an picture of an object, a notifying part 103 notifies the state of the picture that is imaged based on a determination result of the storage condition determining part 102 in each case. When the storage condition determining part 102 determines that the state of the picture imaged by the picture inputting part 101 is a picture suitable for picture recognition, the picture imaged up by the picture inputting part 101 is stored in an picture storing part 104.
COPYRIGHT: (C)2004, JPO&Japio

Classes/Indexing

IPC

IPC Code (1-7) **H04N 5/92** G06K 9/00 G06T 7/00 H04N 5/225 H04N 5/765 H04N 5/93 H04N 101/00(7)

Current IPC	Invention	Version	Additional	Version
Full	G06K 9/00 G06T 7/00 H04N 5/225 H04N 5/765 H04N 5/92 H04N 5/93	20060101 20060101 20060101 20060101 20060101 20060101	H04N 101/00	20060101
Main Group	-	-	-	-
Subclass	-	-	-	-

JP FI codes

G06K 9/00 S; G06T 7/00 300 F; H04N 5/225 ; H04N 5/225 000 ; H04N 5/225 A; H04N 5/225 F; H04N 5/232 300 ; H04N 5/232 939 ; H04N 5/765 ; H04N 5/91 L; H04N 5/92 H; H04N 5/926 ; H04N 5/926 100 ; H04N 5/93 ; H04N 5/93 Z; H04N 9/804 200 ; H04N 9/87 ; H04N 101/00

JP F terms

5B064: AA07
5C022: AA13; AC11; AC42; AC69
5C052
5C053: FA08; FA27; GB21; JA16; KA24; LA01; LA06
5C055
5C122: DA09; DA19; EA01; EA12; EA42; FA12; FC01; FH04; FH10; FH14; FH16; FH24; FJ11; FK12; FK22; FK29; FK34; FK39; FK40; FL03; FL06; GA03; GA07; GA17; GA18; GA28; GC09; HA19; HA27; HA29; HA35; HA38; HA61; HA63; HA68; HA73; HA88; HB01; HB05; HB10
5L096: BA17; CA02; DA03; FA14; FA67; JA11

DWPI class

T01 T04 W01 W04

DWPI manual codes

Expand DWPI manual codes

DWPI chemistry resource numbers

Expand DWPI Chemistry Resource Numbers

DWPI registry numbers

Expand DWPI Registry Numbers

Plasdoc punch codes

Expand Plasdoc Punch Codes

Plasdoc key serial codes

Expand Plasdoc Key Serial Codes

Enhanced polymer indexing

Expand Enhanced Polymer Indexing

Chemical fragment codes

Expand Chemical Fragment Codes

Legal status

Predictive Analytics

Predictive Type	Data
Probability of Grant	
Probability of Early Lapse	
Probability of Restoration Post-Lapse	

INPADOC Legal Status

Gazette Date	Code	Description
2007-08-01	A02 -	DECISION OF REFUSAL JAPANESE INTERMEDIATE CODE: A02 2007-07-31
2007-06-29	A521	WRITTEN AMENDMENT JAPANESE INTERMEDIATE CODE: A523 2007-06-28
2007-05-09	A131 -	NOTIFICATION OF REASONS FOR REFUSAL JAPANESE INTERMEDIATE CODE: A131 2007-05-08
2007-04-26	A977	REPORT ON RETRIEVAL JAPANESE INTERMEDIATE CODE: A971007 2007-04-26
2005-02-28	A621 +	WRITTEN REQUEST FOR APPLICATION EXAMINATION JAPANESE INTERMEDIATE CODE: A621 2005-02-25

Get Family Legal Status

Family

Family

Expand INPADOC Family (1) **INPADOC family:** Dead

Expand DWPI Family (1); Countries/Regions (1) **DWPI family:** Dead

Claims

Claims

All Claims (10)

Claims (English)

1. An image input means to image a to-be-photographed object,
The preservation|save condition judgment means which judges whether the state of the image imaged by said image input means is an image suitable for image recognition based on the preservation|save condition information for preserve|saving the image suitable for image recognition,
An alert|report means to alert|report the imaging state based on the judgment result of said preservation|save condition judgment means each time whenever it images a to-be-photographed object by said image input means,
When said preservation|save condition judgment means judges that the state of the image imaged by said image input means is an image suitable for image recognition,
An image preservation|save means to preserve|save the image imaged by said image input means
These were provided.
The image-pickup apparatus characterized by the above-mentioned.

2. The image-pickup apparatus of Claim 1
WHEREIN:
Image input indication means which instructs the image input by said image input means,
Imaging of the to-be-photographed object by said image input means while the image input is instructed by said image input indication means,
Judgment whether the state of the image imaged by said preservation|save condition judgment means is an image suitable for image recognition,
The alert|report by said alert|report means,
It is said image input means so that the preservation|save of the image by said image preservation|save means may be performed sequentially,
Preservation|save condition judgment means,
A control means to control an alert|report means and an image preservation|save means
These were provided.
The image-pickup apparatus characterized by the above-mentioned.

3. The image-pickup apparatus of Claim 1
WHEREIN:
Multiple said images judged that said image preservation|save means satisfy|fills said preservation|save conditions by said preservation|save condition judgment means are preserve|saved,
The image-pickup apparatus characterized by the above-mentioned.

4. The image-pickup apparatus of Claim 1
WHEREIN:
An image designation means to designate at least 1 of the images preserve|saved for said image preservation|save means,
A designation image preservation|save means to preserve|save the image designated by said image designation means
These were provided.
The image-pickup apparatus characterized by the above-mentioned.

5. The image-pickup apparatus of Claim 1
WHEREIN:
An image designation means to designate at least 1 of the images preserve|saved for said image preservation|save means,
A character-recognition means to recognize the character of the image designated by said image designation means
These were provided.
The image-pickup apparatus characterized by the above-mentioned.

6. The image-pickup apparatus of Claim 5
WHEREIN:

A character-recognition result preservation|save means to preserve|save the recognition result by said character-recognition means was provided.
The image-pickup apparatus characterized by the above-mentioned.

7. The image-pickup apparatus of Claim 6
WHEREIN:
It alert|reports that said alert|report means preserve|saved the recognition result for said character-recognition result preservation|save means,
The image-pickup apparatus characterized by the above-mentioned.

8. The image-pickup apparatus of Claim 1
WHEREIN:
It alert|reports that said alert|report means preserve|saved the image for said image preservation|save means,
The image-pickup apparatus characterized by the above-mentioned.

9. An image input means to image a to-be-photographed object,
The recognition condition judgment means which judges whether the state of the image input by said image input means is an image suitable for image recognition based on the recognition condition information for judging whether it is an image suitable for image recognition,
An alert|report means to alert|report the imaging state based on the judgment result of said recognition condition judgment means each time whenever it images a to-be-photographed object by said image input means,
When said recognition condition judgment means judges that the state of the image imaged by said image input means is an image suitable for image recognition,
An image recognition means to perform image recognition about the image imaged by said image input means
These were provided.
The image-pickup apparatus characterized by the above-mentioned.

10. The image-pickup apparatus of Claim 9
WHEREIN:
Image input indication means which instructs the image input by said image input means,
Imaging of the to-be-photographed object by said image input means while the image input is instructed by said image input indication means,
Judgment whether the state of the image imaged by said recognition condition judgment means is an image suitable for image recognition,
The alert|report by said alert|report means,
It is said image input means so that the image recognition by said image recognition means may be performed sequentially,
Recognition condition judgment means,
A control means to control an alert|report means and an image recognition means
These were provided.
The image-pickup apparatus characterized by the above-mentioned.
(Translation from Clarivate Analytics)

Description

DWPI Drawing description

The figure shows a block diagram of the camera. (Drawing includes non-English language text).

101 - image input unit.

102 - storage condition judgment unit.
103 - report unit.
104 - memory.
105 - image input instruction unit.
106 - control unit.

Drawing description

Expand Drawing Description

Description

Expand Description

Citations

Citation *Record level*

Expand Citing Patents (3)

Cited Patents (0)

Cited Non-patents (0)

DPCI Citation ***Patent family level***

Expand DPCI Citing Patents (3)

DPCI Cited Patents (0)

DPCI Cited Non-patents (0)

Expand DPCI Citation Counts

DPCI Field of search

-

DPCI Citing Patents Country/Region

JP; US

DPCI Cited Patents Country/Region

--

Other

DWPI title terms

CAMERA BUILD PERSON DIGITAL ASSIST DETERMINE STATE PHOTOGRAPH IMAGE SUIT RECOGNISE BASED STORAGE CONTROL

DWPI related accession numbers

--

Copyright 2007-2020 CLARIVATE ANALYTICS

(19)日本国特許庁(JP)　(12)公開特許公報(A)　(11)特許出願公開番号
特開2004-23158
(P2004-23158A)
(43)公開日　平成16年1月22日(2004.1.22)

(51) Int.Cl.[7]	F I			テーマコード（参考）
H04N 5/92	H04N	5/92	H	5B064
G06K 9/00	G06K	9/00	S	5C022
G06T 7/00	G06T	7/00	300F	5C053
H04N 5/225	H04N	5/225	A	5L096
H04N 5/765	H04N	5/225	F	

審査請求 未請求　請求項の数 10　ＯＬ　（全 19 頁）　最終頁に続く

(21)出願番号　特願2002-171616(P2002-171616)
(22)出願日　平成14年6月12日(2002.6.12)

(71)出願人　000005049
シャープ株式会社
大阪府大阪市阿倍野区長池町２２番２２号
(74)代理人　100062144
弁理士　青山　葆
(74)代理人　100086405
弁理士　河宮　治
(74)代理人　100084146
弁理士　山崎　宏
(72)発明者　竹原　和宏
大阪府大阪市阿倍野区長池町２２番２２号
シャープ株式会社内

Ｆターム(参考)　5B064 AA07
5C022 AA13 AC11 AC42 AC69

最終頁に続く

(54)【発明の名称】画像撮像装置

(57)【要約】
【課題】利用者が画像認識に適した撮影状態を容易に調整することができ、画像認識が可能な状態のよい画像を容易に得ることができる画像撮像装置を提供する。
【解決手段】画像認識に適した画像を保存するための保存条件情報に基づいて、画像入力部１０１により撮像された画像の状態が画像認識に適した画像であるか否かを保存条件判断部１０２により判断する。画像入力部１０１により被写体を撮像する毎に、保存条件判断部１０２の判断結果に基づく撮像状態を報知部１０３によりその都度報知する。そして、保存条件判断部１０２が画像入力部１０１により撮像された画像の状態が画像認識に適した画像であると判断すると、画像入力部１０１により撮像された画像を画像保存部１０４に保存する。
【選択図】　図１

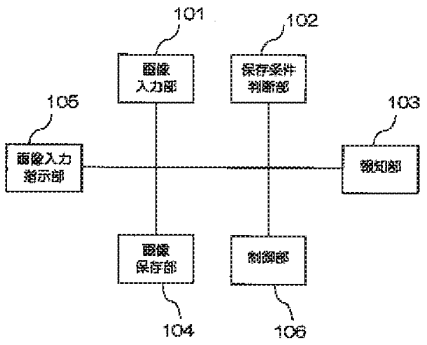

【特許請求の範囲】
【請求項１】
被写体を撮像する画像入力手段と、
画像認識に適した画像を保存するための保存条件情報に基づいて、上記画像入力手段により撮像された画像の状態が画像認識に適した画像であるか否かを判断する保存条件判断手段と、
上記画像入力手段により被写体を撮像する毎に、上記保存条件判断手段の判断結果に基づく撮像状態をその都度報知する報知手段と、
上記保存条件判断手段が上記画像入力手段により撮像された画像の状態が画像認識に適した画像であると判断すると、上記画像入力手段により撮像された画像を保存する画像保存手段とを備えたことを特徴とする画像撮像装置。
【請求項２】
請求項１に記載の画像撮像装置において、
上記画像入力手段による画像入力を指示する画像入力指示手段と、
上記画像入力指示手段により画像入力が指示されている間、上記画像入力手段による被写体の撮像と、上記保存条件判断手段により撮像された画像の状態が画像認識に適した画像であるか否かの判断と、上記報知手段による報知と、上記画像保存手段による画像の保存が逐次行われるように、上記画像入力手段，保存条件判断手段，報知手段および画像保存手段を制御する制御手段とを備えたことを特徴とする画像撮像装置。
【請求項３】
請求項１に記載の画像撮像装置において、
上記画像保存手段は、上記保存条件判断手段により上記保存条件を満たしていると判断された上記画像を複数保存することを特徴とする画像撮像装置。
【請求項４】
請求項１に記載の画像撮像装置において、
上記画像保存手段に保存された画像のうちの少なくとも１つを指定する画像指定手段と、
上記画像指定手段により指定された画像を保存する指定画像保存手段とを備えたことを特徴とする画像撮像装置。
【請求項５】
請求項１に記載の画像撮像装置において、
上記画像保存手段に保存された画像のうちの少なくとも１つを指定する画像指定手段と、
上記画像指定手段により指定された画像の文字を認識する文字認識手段とを備えたことを特徴とする画像撮像装置。
【請求項６】
請求項５に記載の画像撮像装置において、
上記文字認識手段による認識結果を保存する文字認識結果保存手段を備えたことを特徴とする画像撮像装置。
【請求項７】
請求項６に記載の画像撮像装置において、
上記報知手段は、上記文字認識結果保存手段に認識結果を保存したことを報知することを特徴とする画像撮像装置。
【請求項８】
請求項１に記載の画像撮像装置において、
上記報知手段は、上記画像保存手段に画像を保存したことを報知することを特徴とする画像撮像装置。
【請求項９】
被写体を撮像する画像入力手段と、
画像認識に適した画像であるか判断するための認識条件情報に基づいて、上記画像入力手段により入力された画像の状態が画像認識に適した画像であるか否かを判断する認識条件判断手段と、

上記画像入力手段により被写体を撮像する毎に、上記認識条件判断手段の判断結果に基づく撮像状態をその都度報知する報知手段と、
上記認識条件判断手段が上記画像入力手段により撮像された画像の状態が画像認識に適した画像であると判断すると、上記画像入力手段により撮像された画像について画像認識を行う画像認識手段とを備えたことを特徴とする画像撮像装置。
【請求項１０】
請求項９に記載の画像撮像装置において、
上記画像入力手段による画像入力を指示する画像入力指示手段と、
上記画像入力指示手段により画像入力が指示されている間、上記画像入力手段による被写体の撮像と、上記認識条件判断手段により撮像された画像の状態が画像認識に適した画像であるか否かの判断と、上記報知手段による報知と、上記画像認識手段による画像認識が逐次行われるように、上記画像入力手段，認識条件判断手段，報知手段および画像認識手段を制御する制御手段とを備えたことを特徴とする画像撮像装置。
【発明の詳細な説明】
【０００１】
【発明の属する技術分野】
この発明は、画像撮像装置に関し、特にカメラ機能付きの携帯情報端末や携帯電話等の画像認識機能を有する画像撮像装置に関する。
【０００２】
【従来の技術】
従来より、画像認識としてのＯＣＲ（光学式文字認識）の技術は、文書画像から文字情報を抽出する技術として、文書読取装置、名刺読取装置、帳票読取装置などの種々の装置に利用されている。このようなＯＣＲの画像入力手段として、スキャナーが用いられることが一般的であったが、近年、ＣＣＤ（チャージ・カップルド・デバイス）やＣＭＯＳ（コンプリメンタリ・メタル・オキサイド・セミコンダクタ）センサーの進歩により、これらのデバイスを使用したデジタルカメラをＯＣＲの画像入力手段として利用するようになっている。
【０００３】
このような画像認識機能を有する画像撮像装置としては、特開平７－７２５４６号公報に記載されたものがある、この画像撮像装置は、情報処理装置にカメラ機能を備え、さらに文字認識手段を備えることにより、カメラ画像の文字認識を実現している。
【０００４】
また、従来の画像認識機能を有する他の画像撮像装置としては、特開２０００－２０７４８７号公報に記載されたものがある。この画像撮像装置は、ＣＣＤビデオカメラにより文字を撮像して、その撮像された画像から自動的に文字領域を抽出した後、文字認識手段により文字認識結果を取得する。さらに、上記画像撮像装置では、文字認識結果を表示したり、認識結果に応じてアプリケーションプログラムへの連動処理なども実現している。
【０００５】
【発明が解決しようとする課題】
ところで、上記特開平７－７２５４６号公報に記載の画像撮像装置は、シャッター駆動部を備え、レリーズ操作により対象物を撮影するものである。この画像撮像装置では、どのような撮影状態で画像を撮影するかといった判断は利用者が決めるものであり、利用者は個人の経験的な判断等に基づいて状態のよい画像を撮影できるよう配慮して撮影を行うしかないという問題がある。
【０００６】
また、上記利用者による撮影状態の調整は、経験的な判断やおおよその見当といった極めてあいまいなものであるため、例えば利用者は適切と判断して撮影した場合でも、実際は明度不足などにより文字認識に適していない画像を撮影してしまうといった可能性が十分あり得る。また、レリーズ操作による撮影では、撮影時の不注意等により、例えば傾いた画像を撮影してしまうといった不具合が起こることもあり得る。特に、片手あるいは両手

で持って撮影を行う小型の装置の場合、手ぶれが起こる可能性が十分あり得る。その結果、撮影された画像にぶれが生じてしまい、文字認識等に利用できなくなってしまうという不具合が発生する。このため、利用者は、撮影状態を判断しながら慎重にレリーズ操作を行う必要があるが、これが利用者の大きな負担となっている。

【０００７】

また、上記特開２０００－２０７４８７号公報に記載の画像撮像装置では、文字認識対象物をＣＣＤビデオカメラによって撮像する毎に、文字認識結果をその都度表示している。

【０００８】

しかしながら、この画像撮像装置でも、やはり、利用者はどのようにすれば認識に適した画像を撮影できるかが不明であり、利用者は表示画面や認識結果を監視しながら、撮影状態を修正していかなければならないという問題がある。また、上記画像撮像装置は、撮像された画像の一部分について文字認識を行うものであり、文字認識に適した画像全体を撮影するといった機能は持っていないという欠点がある。そのため、文字認識に適した画像を撮影保存し、画像中の文字全てについて文字認識を行うといった用途には適していない。また、撮影保存を繰り返し、複数枚の画像を保存し、その後で、保存した複数枚の画像について文字認識等を行うといった用途にも適していないといった欠点もある。

【０００９】

そこで、この発明の目的は、利用者が画像認識に適した撮影状態を容易に調整することができ、画像認識が可能な状態のよい画像を容易に得ることができる画像撮像装置を提供することにある。

【００１０】

また、この発明のもう１つの目的は、複数の画像に含まれる情報全てについても画像認識が可能な画像撮像装置を提供することにある。

【００１１】

【課題を解決するための手段】

上記目的を達成するため、この発明の画像撮像装置は、画像入力手段により被写体を撮像し、画像認識に適した画像を保存するための保存条件情報に基づいて、上記画像入力手段により撮像された画像の状態が画像認識に適した画像であるか否かを保存条件判断手段により判断して、上記画像入力手段により被写体を撮像する毎に、上記保存条件判断手段の判断結果に基づく撮像状態（明るさや傾きなど）を報知手段によりその都度報知すると共に、上記保存条件判断手段が画像入力手段により撮像された画像の状態が画像認識に適した画像であると判断すると、上記画像入力手段により撮像された画像を画像保存手段に保存する。ここで、画像認識としては、文字認識、バーコード認識、指紋認識、顔画像認識、図面認識などのいずれでもよく、２つ以上の画像認識を組み合わせてもよい。

【００１２】

上記構成の画像撮像装置によれば、上記画像入力手段により被写体を撮像する毎に、上記報知手段により、保存条件判断手段の判断結果に基づいた撮像状態がその都度報知されるため、利用者は報知情報に基づいて容易に撮影の状態を調整することができる。さらに、保存条件情報を満たす画像を上記画像保存手段に保存することにより、状態のよい画像すなわち画像認識に適した画像が保存できる。

【００１３】

また、一実施形態の画像撮像装置は、画像入力指示手段により画像入力が指示されている間、上記画像入力手段による被写体の撮像と、上記保存条件判断手段により撮像された画像の状態が画像認識に適した画像であるか否かの判断と、上記報知手段による報知と、上記画像保存手段による画像の保存が逐次行われるように、上記画像入力手段，保存条件判断手段，報知手段および画像保存手段を制御手段により制御する。

【００１４】

上記実施形態の画像撮像装置によれば、上記画像入力指示手段により指示が行われている間、画像入力および画像の保存が行われるため、利用者にとって使い勝手がよい画像撮像装置を実現できる。

【００１５】
また、一実施形態の画像撮像装置は、上記画像保存手段は、上記保存条件判断手段により上記保存条件を満たしていると判断された上記画像を複数保存する。
【００１６】
上記実施形態の画像撮像装置によれば、上記画像保存手段に保存された複数の画像に含まれる情報全てについて画像認識が可能な画像撮像装置を実現できる。
【００１７】
また、一実施形態の画像撮像装置は、上記画像保存手段に保存された画像の少なくとも１つを画像指定手段により指定し、その指定された画像を指定画像保存手段に保存する。
【００１８】
上記実施形態の画像撮像装置によれば、利用者が上記画像指定手段により例えば複数の画像の中から所望の画像を指定することにより、利用者が希望する画像を上記指定画像保存手段に保存することが可能である。
【００１９】
また、一実施形態の画像撮像装置は、上記画像保存手段に保存された画像の少なくとも１つを画像指定手段により指定し、その指定された画像の文字を文字認識手段により認識する。
【００２０】
上記実施形態の画像撮像装置によれば、上記画像指定手段により指定された画像に関し、文字認識手段により文字認識を行うことにより、利用者は希望する画像中の文字情報を得ることができる。
【００２１】
また、一実施形態の画像撮像装置は、上記文字認識手段による認識結果を文字認識結果保存手段により保存する。
【００２２】
上記実施形態の画像撮像装置によれば、文字情報を保存することができる。
【００２３】
また、一実施形態の画像撮像装置は、上記報知手段は、上記文字認識結果保存手段に認識結果を保存したことを報知する。
【００２４】
上記実施形態の画像撮像装置によれば、上記報知手段により文字認識されたことが報知されるため、利用者は画像認識に適した画像から文字が認識されたことを知ることができる。
【００２５】
また、一実施形態の画像撮像装置は、上記報知手段は、上記画像保存手段に画像を保存したことを報知する。
【００２６】
上記実施形態の画像撮像装置によれば、上記報知手段により画像が保存されたことが報知されるため、利用者は画像認識に適した画像が保存されたことを知ることができる。
【００２７】
また、この発明の画像撮像装置は、画像入力手段により被写体を撮像し、画像認識に適した画像であるか判断するための認識条件情報に基づいて、上記画像入力手段により入力された画像の状態が画像認識に適した画像であるか否かを認識条件判断手段により判断して、上記画像入力手段により被写体を撮像する毎に、上記認識条件判断手段の判断結果に基づく撮像状態を報知手段によりその都度報知すると共に、上記認識条件判断手段が上記画像入力手段により撮像された画像の状態が画像認識に適した画像であると判断すると、上記画像入力手段により撮像された画像について画像認識手段により画像認識を行う。ここで、画像認識としては、文字認識、バーコード認識、指紋認識、顔画像認識、図面認識などのいずれでもよく、２つ以上の画像認識を組み合わせてもよい。
【００２８】

上記構成の画像撮像装置によれば、上記画像入力手段により被写体を撮像する毎に、上記報知手段により、認識条件判断手段の判断結果に基づいた撮像状態がその都度報知されるため、利用者は報知情報に基づいて容易に撮影の状態を調整することができる。さらに、認識条件情報を満たす画像について上記画像認識手段により画像認識を行うことにより、状態のよい画像すなわち画像認識に適した画像について画像認識ができる。

【００２９】

また、一実施形態の画像撮像装置は、画像入力指示手段により画像入力が指示されている間、上記画像入力手段による被写体の撮像と、上記認識条件判断手段により撮像された画像の状態が画像認識に適した画像であるか否かの判断と、上記報知手段による報知と、上記画像認識手段による画像認識が逐次行われるように、上記画像入力手段，認識条件判断手段，報知手段および画像認識手段を制御手段により制御する。

【００３０】

上記実施形態の画像撮像装置によれば、上記画像入力指示手段により指示が行われている間、画像入力および画像認識が行われるため、利用者にとって使い勝手がよい画像撮像装置を実現できる。

【００３１】

【発明の実施の形態】

以下、この発明の画像撮像装置を図示の実施の形態により詳細に説明する。

【００３２】

（第１実施形態）

図１はこの発明の第１実施形態の画像撮像装置の主要な機能を示す構成図である。図１に示すように、この第１実施形態の画像撮像装置は、画像入力手段としての画像入力部１０１、保存条件判断手段としての保存条件判断部１０２、報知手段としての報知部１０３、画像保存手段としての画像保存部１０４、画像入力指示手段としての画像入力指示部１０５と、制御手段としての制御部１０６とを備えている。

【００３３】

また、図５は上記画像入力部１０１の主要な構成例としての撮像装置５０１と、表示装置５０５を示している。この撮像装置５０１は、図５に示すように、ＣＣＤ５０２と、Ａ／Ｄ（アナログ／デジタル）コンバータ５０３と、画像メモリ５０４とを備えている。上記ＣＣＤ５０２は、被写体像をアナログ信号に変換し、Ａ／Ｄコンバータ５０３は、ＣＣＤ５０２からのアナログ信号をデジタル画像データに変換して、変換されたデジタル画像データを画像メモリ５０４に格納する。そして、上記画像メモリ５０４に格納されたデジタル画像データを、表示装置５０５により表示する。この表示装置５０５は、ＬＣＤ（液晶ディスプレイ）５０６とバックライト５０７とを備えている。

【００３４】

図１に示す保存条件判断部１０２は、画像入力部１０１内（より詳しくは図５に示す画像メモリ５０４内）の画像データが画像認識に適しているか判断するための保存条件情報を保持し、上記画像データが上記保存条件を満たしているか否かを判断する手段である。ここで「保存条件」とは、画像の明るさが適切である、画像が傾いていない、等といった条件情報のことであり、詳細な例については後述する。

【００３５】

また、上記報知部１０３は、保存条件判断部１０２の判断結果を元に、保存条件が満たされない場合、画像の状態や、画像が保存されるための利用者への指示などを報知する手段である。

【００３６】

また、上記画像保存部１０４は、保存条件判断部１０２が保存に適していると判断した時点における画像入力部１０１内の画像データを保存する手段であり、具体的には、ＲＡＭ（ランダム・アクセス・メモリー）などがこれに該当する。なお、上記画像保存部１０４を、フラッシュメモリ、磁気ディスクなどといった、電源の供給なしでデータを保持できる構成にしてもかまわない。

【００３７】
さらに、上記画像保存部１０４は、複数の画像を保存することが可能な例えば図６に示すような構成からなる。図６の画像保存領域６０１は、カウンタ領域６０２と、定められた数（Ｍ個）の画像保存領域６０３とから構成されており、画像データは、カウンタ領域６０２内のカウンタが指す値の番号の画像保存領域に保存されるものとする。
【００３８】
また、図１に示す画像入力指示部１０５は、画像入力部１０１，保存条件判断部１０２，報知部１０３および画像保存部１０４の動作が有効であることを指示するための手段であり、具体的にはスイッチ等である。
【００３９】
また、上記制御部１０６は、画像入力指示部１０５により画像入力が指示されている間、画像入力部１０１による画像の入力と、保存条件判断部１０２による画像の状態が画像認識に適した画像であるか否かの判断と、報知部１０３による報知と、画像保存部１０４による画像の保存が逐次行われるように、画像入力部１０１，保存条件判断部１０２，報知部１０３および画像保存部１０４を制御する。
【００４０】
図３（ａ），（ｂ）は、この第１実施形態の具体的な構成例であるカメラ付き携帯端末型の画像撮像装置を示しており、図３（ａ）は正面図であり、図３（ｂ）は裏面図である。この画像撮像装置は、本体３０１と、ディスプレイ３０２と、カメラ３０３と、起動ボタン３０４とを備えている。
【００４１】
図３（ｂ）に示すカメラ３０３は画像入力部１０１（図１に示す）に該当し、図３（ａ）に示す起動ボタン３０４は画像入力指示部１０５（図１に示す）に該当する。
【００４２】
次に、図２のフローチャートを参照しながら、この第１実施形態の画像撮像装置の動作を説明する。ここでは、利用者が、図４に示す認識対象文書である名刺４０１を、文字認識後に住所録などに利用する目的で、文字認識に適した状態で撮影保存することを試みるものとする。
【００４３】
最初に、図２のステップＳ２０１において、利用者が画像入力指示部１０５にて指示（図３（ａ）の起動ボタン３０４を押し続ける操作）を行うことにより、画像入力を開始する。
【００４４】
次に、ステップＳ２０２において、画像保存部１０４内のカウンタ（図６のカウンタ領域６０２内の数値）が初期化され、カウンタの値は１となる。
【００４５】
次に、ステップＳ２０３において、画像入力部１０１（図３（ｂ）に示すカメラ３０３）により、被写体（名刺４０１）の撮像が開始される。
【００４６】
次に、ステップＳ２０４において、画像入力部１０１内の画像データに対して、保存条件判断部１０２が保存条件を満たすか否かを判断する。この保存条件および保存条件判断部１０２の判断の詳細な説明に関しては、後述する。
【００４７】
次に、ステップＳ２０５で、ステップＳ２０４の結果により保存条件判断部１０２により画像データが保存条件を満たさないと判断した場合は、ステップＳ２０６に進む一方、画像データが保存条件を満たすと判断した場合は、ステップＳ２０７に進む。
【００４８】
ステップＳ２０６では、画像データが保存条件を満たさないため、報知部１０３により画像の状態を報知し、ステップＳ２０９に進む。例えば、ステップＳ２０６で保存条件判断部１０２により明度が不足していると判断された場合、図７の７０１のように「明るさが

不足しています」との情報を報知する。また、保存条件判断部１０２により画像が傾いていると判断された場合、図８の８０１のように、「文書が左に傾いています」との情報を報知する。

【００４９】

一方、ステップＳ２０５からステップＳ２０７に進んだ場合、ステップＳ２０７において、画像入力部１０１内の画像データが、画像保存部１０４に保存される。この実施形態では、カウンタ値（図６のカウンタ領域６０２内の値）をｍとすると、画像データは、ｍ番目の画像保存領域６０３に保存される。

【００５０】

次に、ステップＳ２０８において、カウンタ値を１つ増加する。図６では領域数がＭであるが、カウンタ値ｍが　ｍ　＞　Ｍとなった場合は、ｍ　＝　１とするものとする。

【００５１】

次に、ステップＳ２０９において、利用者が画像入力指示部１０５により入力指示を継続中であるか否か（図３（ａ）の起動ボタン３０４を押し続けているか否か）により、処理が分岐し、入力指示が継続中であれば、ステップＳ２０３に戻り、入力指示が行われていなければ、処理を終了する。

【００５２】

すなわち、この実施形態では、画像入力指示部１０５により指示が継続中である（図３（ａ）の例では起動ボタン３０４を押し続けている）場合、保存条件判断部１０２により撮像状態が保存条件を満たさないと判断される間は、ステップＳ２０３、Ｓ２０４、Ｓ２０５、Ｓ２０６、Ｓ２０９の処理を繰り返す。

【００５３】

このようにして、利用者は、報知部１０３により都度報知される画像の状態に関する情報をもとに、明度、傾きなどといった撮像状態を調整していく。

【００５４】

そうして、利用者が撮像状態を調整することによって、保存条件判断部１０２により撮像状態が保存条件を満たすと判断された場合、ステップＳ２０５からステップＳ２０７以下に進み、画像の保存が行われる。

【００５５】

以下、上記ステップＳ２０４における画像状態の判断に関する詳細を、図１３のフローチャートと図１４を用いて説明する。図１３は画像の状態を判断する処理を示すフローチャートであり、図１４は文字列の傾き検出を説明する図である。

【００５６】

まず、図１３の最初のステップＳ１３０１において、画像入力部１０１内の画像の明るさ（明度）が算出され、ステップＳ１３０２で算出された数値が適切な数値であるかが判定される。

【００５７】

明度は、画像入力部１０１内の画像が白黒多値画像の場合、

【数１】

$$明度L = \frac{\sum_{i=1,j=1}^{i\leq w,j\leq h} P(i,j)}{画像の横ピクセル数 \times 画像の縦ピクセル数}$$

の式で求められる（ただし、Ｐ（ｉ，ｊ）は、画像中の（ｉ，ｊ）座標における画素値、ｗは画像の横幅ピクセル数、ｈは画像の縦幅ピクセル数）。カラー画像で、例えば、Ｒ（赤）、Ｇ（緑）、Ｂ（青）で出力される場合でも、各画素ごとに、

変換後の画素値　＝　（Ｒ＋Ｇ＋Ｂ）／３

の式で変換し、白黒多値画像に変換後、前述の明度を求める式で算出できる。

【００５８】

通常、画像の明度が低すぎる場合、あるいは極端に高すぎる場合でも、認識精度は低下する。したがって、上記算出した明度Ｌについて、

Ｌ０　≦　Ｌ　かつ　Ｌ　≦　Ｌ１

ならば、明度の値は適切であるという条件式、および、下限値Ｌ０，上限値Ｌ１の値が保存条件情報の１つとなっている。

【００５９】

ステップＳ１３０２において、保存条件判断部１０２は、明度Ｌが保存条件情報を満たす、すなわち、

Ｌ０　≦　Ｌ　かつ　Ｌ　≦　Ｌ１

を満たすか否かを判定する。この条件に適していなければ、保存条件は満たさないとして終了する。このとき、満たさない原因がわかっており、さらに、撮影条件をどのように変更すれば保存条件に適するかも簡単に求められる。

【００６０】

例えば、Ｌ　＜　Ｌ０　である場合、明るさが不足しているため、より明るい撮影状態にする必要がある。この状態を報知している例が図７である。

【００６１】

利用者は、表示された報知情報により、現在の撮影環境が文字画像を撮影保存するためには暗い環境であるということを知り、室内を明るくするなどの改善を行う。再度、ステップＳ１３０２に進んだときに明るさに関する条件は満たされたならば、次はステップＳ１３０３に進むことになる。

【００６２】

ステップＳ１３０３からステップＳ１３０６までの処理では、名刺４０１の傾きを計測し、傾きが許容範囲内か否かを測定する。なお、画像の傾きを測定する処理はさまざまな手法が考えられるが、例えば、後述のように最初に文書画像が多値画像であった場合は文書画像の２値化を行い、次に画像中の文字列を抽出し、その後、各文字列の傾きの平均を求めて、求めた平均値を画像の傾きの値とするといった手法で容易に実現できる。

【００６３】

最初にステップＳ１３０３において、画像入力部１０１内の画像の２値化処理を行う。画像が白黒多値画像の場合は、そのまま２値化の閾値を求める。カラー画像である場合、例えばＲＧＢで表される場合などは前述の変換処理により、白黒多値画像に変換後、閾値を求める。閾値が定まると、各画素について、閾値未満ならば１（文字成分）、閾値以上ならば０（背景成分）と変換することにより、２値画像に変換することができる。２値化の閾値の求め方に関しては、さまざまな手法が存在するが、例えば、「大津のアルゴリズム」と呼ばれる判別分析法を用いることにより容易に実現できる。

【００６４】

次に、ステップＳ１３０４において、文字列（行）抽出処理を行う。文字列の抽出に関してはさまざまな方法が存在するが、例えば、特許第３０５８４８９号「文字列抽出方法」に文書画像から文字列を抽出する方法が記載されており、この実施形態でも、この方法を用いることにより、文字列を抽出することが容易に実現できる。

【００６５】

次に、ステップＳ１３０５において、各文字列の傾きの計測を行う。文字列の傾き計測に関しても種々の方法が存在するが、例えば次のような方法で求められる。以下、図８を参照して説明する。ステップＳ１３０４の行抽出処理にて、行数と各行の外接枠の座標が抽出できる。Ｎ行抽出された（この実施形態では、Ｎ＝６）として、各ｉ行（ｉ＝１～Ｎ）の左上座標を｛ＳＴＸ（ｉ），　ＳＴＹ（ｉ）｝とし、右下座標を｛ＥＮＸ（ｉ），　ＥＮＹ（ｉ）｝とする。この各行を、Ｘ座標値が、（ＳＴＸ（ｉ）＋ＥＮＸ（ｉ））／２の箇所で、左右に分割する。ここで左の領域をＡ０，　右の領域をＡ１とする。Ａ０，Ａ１　のそれぞれの領域について、それぞれについてＹ方向の重心　Ｙ０，Ｙ１　を次のように求める。

【００６６】

【数２】

$$Y0=\sum_{y=ENY(i)}^{STY(i)}\frac{y\times M0(y)}{A0内の総文字画素数}$$

ただし、Ｍ０（ｙ）　は、Ａ０　領域内でＹ座標が　ｙ　である直線上に存在する文字画素数である。また、重心Ｙ１　に関しても同様の式により求められる。

【００６７】

以上の重心Ｙ０，Ｙ１　を用いて、各ｉ行（ｉ＝１～Ｎ）の行の傾きθ（ｉ）［度］を、

$$\tan\theta(i)=(Y1-Y0)/\{(ENX(i)-STX(i))/2\}$$
$$=2\times(Y1-Y0)/\{(ENX(i)-STX(i))$$

で表せるので、傾きθ（ｉ）は、

θ（ｉ）　＝ａｒｃｔａｎ｛２×（Ｙ１－Ｙ０）／｛（ＥＮＸ（ｉ）－ＳＴＸ（ｉ））｝

により求められる。最後に、傾きθ（ｉ）の平均値θを求め、その値を傾きとする。

【００６８】

以上、画像の傾きの計測方法に関して述べたが、その他さまざまな計測方法があり、上記の方法に制限されるものではない。

【００６９】

次に、図１３のステップＳ１３０６において、ステップＳ１３０５で求めた傾きが認識対象として問題ないか否かが判定される。一般にＯＣＲは、認識対象の文書画像の傾きが大きい場合、認識精度は低下する。

【００７０】

ここでは傾き許容範囲は、認識実験等からα［度］以内と定められたとする。

すなわち、

$-\alpha\leqq\theta$　かつ　$\theta\leqq\alpha$

ならば、傾きは許容範囲であるという条件が保存条件情報の一構成要素となっている。

【００７１】

ステップＳ１３０６において、ステップＳ１３０５で求めた傾きθが上記条件を満たさないとき、すなわち、

$\theta<-\alpha$　または　$\alpha<\theta$

のとき、保存条件は満たさないとして終了する。このときの傾きに関する画像の状態の報知例を図８の８０１に示しており、「文書が左に傾いています」が表示される。

【００７２】

このように、上記第１実施形態の画像撮像装置によれば、保存条件情報による保存条件判断部１０２の判断結果に基づいて画像の保存が行われ、利用者の経験的な判断などといったあいまいな基準でなく、正確な保存条件情報をもとに保存が行われることにより、画像認識に適した状態のよい画像を保存することができる。また、保存条件を満たしている場合、保存条件を満たしている画像が保存されるため、手ぶれ等のレリーズ操作時の不注意により、画像認識に適さない画像を撮影してしまう危険性をなくすことができる。さらに、撮像状態が報知部１０３により都度報知されることにより、利用者は報知された撮影状態をもとにして適切に撮影状態を調整することができる。

【００７３】

また、画像入力指示部１０５により、指示が行われている間、画像の入力が行われるため、利用者にとって使い勝手がよい。

【００７４】

この第１実施形態では、画像保存部１０４内に複数の保存領域を有し、保存領域を順次更新していったが、保存領域は単数で保存に適した画像が更新されて保存される構成としてもよい。また、単数あるいは複数の保存領域すべて保存した場合、新たに保存しないように構成することも容易である。

【００７５】

また、図９に示すように、画像保存部１０４に画像が保存されたことを表示やアラームなどの音声機能を用いて報知することも容易にできる。図９では、画像表示により９０１のように、「画像を保存しました」との情報を報知する。報知を行っているが、アラームなどの音声機能を用いて報知することも容易に実現できる。

【００７６】

さらに、画像が保存されたことを報知部１０３により報知することによって、利用者は画像が保存されたことを知ることができる。

【００７７】

（第２実施形態）

図１０（Ａ）はこの発明の第２実施形態の画像撮像装置の一例としての携帯端末の主要な機能を示す構成図である。図１０（Ａ）に示すように、この第２実施形態の画像撮像装置は、画像入力手段としての画像入力部１０１、保存条件判断手段としての保存条件判断部１０２、報知手段としての報知部１０３、画像保存手段としての画像保存部１０４、画像入力指示手段としての画像入力指示部１０５と、制御手段としての制御部１０６と、画像指定手段としての画像指定部１０７と、指定画像保存手段としての指定画像保存部１０８と、文字認識手段としての文字認識部１１１と、文字認識結果保存手段としての認識結果保存部１１２とを備えている。

【００７８】

この第２実施形態の携帯端末では、フラッシュメモリ，磁気ディスクなどの電源の供給なしで記憶データを保持可能な指定画像保存部１０８，画像指定部１０７を備えることによって、画像保存部１０４に保存された画像を、利用者が画像指定部１０７により指定し、指定された画像を指定画像保存部１０８に保存する。

【００７９】

また、文字認識部１１１と画像指定部１０７を備え、上記指定画像保存部の代わりに文字認識結果の保存が可能な認識結果保存部１１２を備えることにより、画像指定部１０７により指定した画像を文字認識部１１１により文字認識し、その文字認識結果を認識結果保存部１１２に保存する。

【００８０】

図１０（Ｂ）に上記携帯端末の正面図を示している。図１０（Ｂ）では、利用者は、ディスプレイ３０２に表示された画像保存部１０４（図１０（Ａ）に示す）内の画像１００１の中から、１つの画像を画像指定手段としての操作用ペン３０５により指定する。

【００８１】

利用者が、画像保存ボタン１００２を選択することにより、指定された画像は内蔵された指定画像保存部１０８に保存される。また、認識開始ボタン１００３を選択することにより、文字認識部１１１は、指定された画像中の文字を認識する。認識結果は、認識終了後に表示され、認識結果保存部１１２に保存される。

【００８２】

このように、上記第２実施形態の携帯端末によれば、上記画像保存部１０４に複数の画像を保存し、利用者が画像指定部１０７により指定できるため、希望する画像を保存することが可能である。

【００８３】

また、上記画像指定部１０７により指定された画像に関し、文字認識部１１１により文字認識を行うことにより、利用者は希望する画像の文字情報を得ることができる。

【００８４】

さらに、上記文字認識部１１１による認識結果を認識結果保存部１１２により保存することによって、文字情報を保存することができる。

【００８５】

さらに、文字認識部１１１による認識結果が保存されたことが報知部１３により報知されるため、利用者は文字認識されたことを知ることができる。

【００８６】

（第３実施形態）
図１１（Ａ）はこの発明の第３実施形態の画像撮像装置の主要な機能を示す構成図である。図１１（Ａ）に示すように、この第２実施形態の画像撮像装置は、画像入力手段としての画像入力部１０１、報知手段としての報知部１０３、画像入力指示手段としての画像入力指示部１０５と、制御手段としての制御部１０６と、認識条件判断手段としての認識条件判断部１１０と、画像認識手段としての文字認識部１１１と、文字認識結果保存手段としての認識結果保存部１１２とを備えている。
【００８７】
上記第３実施形態の携帯端末では、認識条件判断部１１０は、画像入力部１０１内の画像データが画像認識に適した画像であるか判断するための認識条件情報を保持し、上記画像データが上記認識条件を満たしているか否かを判断する。そして、上記報知部１０３は、認識条件判断部１１０の判断結果を元に、認識条件が満たされない場合、画像の状態や、画像が保存されるための利用者への指示などを報知する。また、上記文字認識部１１１は、認識条件判断部１１０が文字認識に適していると判断した時点における画像入力部１０１内の画像データについて文字認識を行う。そうして得られた文字認識部１１１の認識結果を認識結果保存部１１２に保存する。
【００８８】
また、上記制御部１０６は、画像入力指示部１０５により画像入力が指示されている間、画像入力部１０１による画像の入力と、認識条件判断部１１０により撮像された画像の状態が文字認識に適した画像であるか否かの判断と、報知部１０３による報知と、文字認識部１１１の文字認識と、認識結果保存部１１２の保存が逐次行われるように、画像入力部１０１，報知部１０３，認識条件判断部１１０，文字認識部１１１および認識結果保存部１１２を制御する。
【００８９】
また、図１１（Ｂ）は上記携帯端末の正面図であり、画像の状態（明るさに関する）の報知例を示しており、図１２は画像の認識結果の報知例を示している。
【００９０】
図１１（Ｂ）では、画像入力時に認識対象領域１１０１が表示され、その認識対象領域１１０１について、起動ボタン３０４（画像入力指示部１０５）を押している間、認識条件判断部１１０により、認識条件情報を満たすか否かの判断が行われるものとする。
【００９１】
ここで、認識条件判断部１１０による認識条件情報を満たすか否かの判断は、第１実施形態で述べた画像保存条件を満たすか否かの判断と同様に行えばよい。
【００９２】
認識条件情報を満たさない場合、図１１（Ｂ）の１１０２のように、「画像の状態：明るさが不足しています」との撮像状態を都度報知する。図１１（Ｂ）にて、その例（明度が不足している場合の例）を示している。
【００９３】
一方、認識条件情報を満たす場合、図１２に示すように、認識対象領域１１０１についての認識結果を表示する。図１２の１２０１のように、「認識結果：大阪市阿倍野区長池町２２番２２号」と報知する。
【００９４】
このように、上記第３実施形態の携帯端末によれば、認識条件情報による認識条件判断部１１０の判断結果に基づいて画像の認識が行われ、利用者の経験的な判断などといったあいまいな基準でなく、認識条件情報をもとに画像認識が正確な行われることにより、画像認識に適した撮影状態での認識が可能である。また、認識条件を満たしている場合、認識条件を満たしている画像について画像認識されるため、手ぶれ等のレリーズ操作時の不注意により、認識に適さない画像を撮影してしまう危険性をなくすことができる。同様に、認識条件を満たしている場合、認識が行われるため、認識に適した画像について文字認識を行うため、認識精度の向上が実現できる。さらに、撮像状態が報知部１０３により都度

報知されることにより、利用者は報知された撮影状態をもとにして適切に撮影状態を調整することができる。

【００９５】

上記第１～第３実施形態では、画像認識として文字認識機能を有する画像撮像装置について説明したが、文字認識に限らず、バーコード認識、指紋認識、顔画像認識、図面認識などの一般の画像認識機能を有する画像撮像装置にこの発明を適用してもよい。

【００９６】

この発明の画像撮像装置は、上記第１～第３実施形態に限定されるものではなく、例えば、第２，第３実施形態を組み合わせて、保存条件判断部と認識条件半段部とを備え、画像の保存と画像認識とを行う画像撮像装置に適用してもよい。

【００９７】

【発明の効果】

以上より明らかなように、この発明の画像撮像装置によれば、保存条件情報による保存条件判断手段の判断結果に基づいて画像の保存を行うことによって、利用者の経験的な判断などといったあいまいな基準でなく、実験等で求められた正確な保存条件情報をもとに画像保存手段により保存が行われることにより、画像認識に適した状態のよい画像の保存が可能である。さらに、保存条件を満たしている場合、保存条件を満たしている画像が保存されるため、手ぶれ等のレリーズ操作時の不注意により、認識に適さない画像を撮影してしまう危険性をなくすことができる。さらに、撮像状態が報知手段により都度報知されることにより、利用者は報知された撮影状態をもとにして適切に撮影状態を調整することができる。

【００９８】

また、この発明の画像撮像装置によれば、認識条件情報による認識条件判断手段の判断結果に基づいて画像認識（文字、バーコード、指紋、顔、図面などの認識）を行うことによって、利用者の経験的な判断などといったあいまいな基準でなく、実験等で求められた正確な認識条件情報をもとに画像認識手段により画像認識が行われることにより、画像認識に適した撮影状態での認識が可能である。さらに、認識条件を満たしている場合、認識条件を満たしている画像について画像認識されるため、手ぶれ等のレリーズ操作時の不注意により、認識に適さない画像を撮影してしまう危険性をなくすことができる。同様に、認識条件を満たしている場合、認識が行われるため、認識に適した画像について文字認識を行うため、認識精度の向上が実現できる。さらに、撮像状態が報知手段により都度報知されることにより、利用者は報知された撮影状態をもとにして適切に撮影状態を調整することができる。

【図面の簡単な説明】

【図１】図１はこの発明の第１実施形態の画像撮像装置のブロック図である。

【図２】図２は上記画像撮像装置のフローチャートである。

【図３】図３（ａ）はカメラ付き携帯端末型の画像撮像装置を示す正面図であり、図３（ｂ）は上記画像撮像装置の裏面図である。

【図４】図４は認識対象とする文書（名刺）を示す図である。

【図５】図５は上記画像撮像装置の画像入力部の構成を示すブロック図である。

【図６】図６は上記画像撮像装置の画像保存部の構成を示す図である。

【図７】図７は画像の状態（明るさに関する）を報知する例を示す図である。

【図８】図８は画像の状態（傾きに関する）を報知する例を示す図である。

【図９】図９は画像を保存したことを報知する例を示す図である。

【図１０】図１０（Ａ）はこの発明の第２実施形態の画像撮像装置の一例としての携帯端末のブロック図であり、図１０（Ｂ）は上記携帯端末の正面図である。

【図１１】図１１（Ａ）はこの発明の第３実施形態の画像撮像装置の一例としての携帯端末のブロック図であり、図１１（Ｂ）は上記携帯端末の正面図であり、画像の状態（明るさに関する）の報知例を示す図である。

【図１２】図１２は上記携帯端末の画像の認識結果の報知例を示す図である。

【図１３】図１３は上記第１実施形態の画像認識装置の画像の状態を判断する処理を示すフローチャートである。
【図１４】図１４は上記第１実施形態の画像認識装置の文字列の傾き検出例を示す図である。
【符号の説明】
１０１…画像入力部、
１０２…保存条件判断部、
１０３…報知部、
１０４…画像保存部、
１０５…画像入力指示部、
１０６…制御部、
１０７…画像指定部、
１０８…指定画像保存部、
１１０…認識条件判別部、
１１１…文字認識部、
１１２…認識結果保存部、
３０１…本体、
３０２…ディスプレイ、
３０３…カメラ、
３０４…起動ボタン、
３０５…操作用ペン、
４０１…名刺、
５０１…撮像装置、
５０２…ＣＣＤ、
５０３…Ａ／Ｄコンバータ、
５０４…画像メモリ、
５０５…表示装置、
５０６…ＬＣＤ、
５０７…バックライト、
６０１…画像保存領域、
６０２…カウンタ領域、
６０３…画像保存領域、
７０１…撮像時の状態（明るさに関する）の報知例、
８０１…撮像時の状態（傾きに関する）の報知例、
９０１…画像保存時の報知例、
１００１…保存された複数の画像のうちの一画像、
１００２…画像保存ボタン、
１００３…認識開始ボタン、
１１０１…認識対象領域、
１１０２…画像の状態の報知例、
１２０１…認識結果の報知例。

【図１】

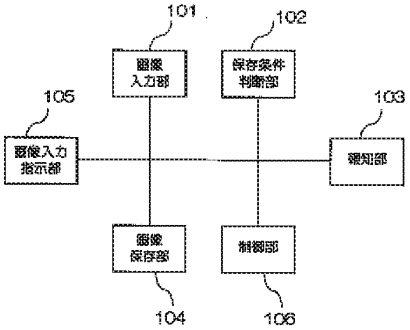
101
102
画像入力部
保存条件判断部
105
103
画像入力指示部
報知部
画像保存部
制御部
104
106

【図２】

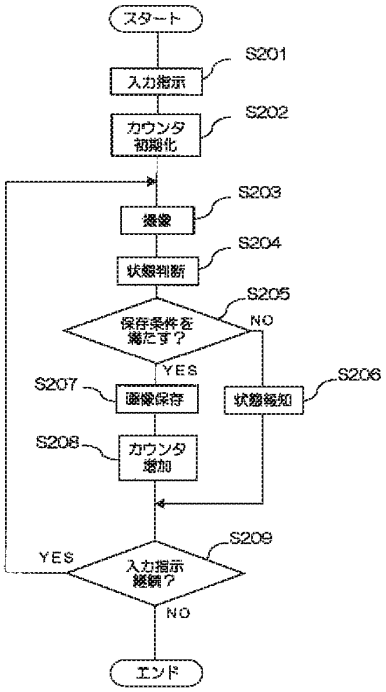
スタート
S201
入力指示
S202
カウンタ初期化
S203
撮像
S204
状態判断
S205
保存条件を満たす？
NO
YES
S207
画像保存
S206
状態報知
S208
カウンタ増加
S209
YES
入力指示継続？
NO
エンド

【図３】

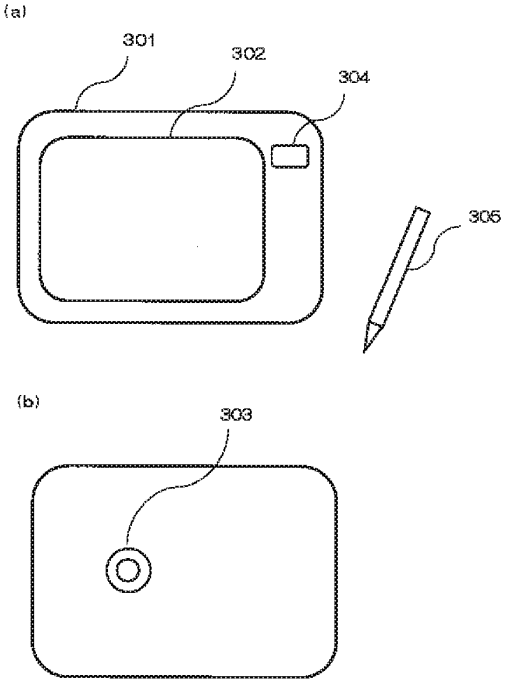
(a)
301
302
304
305
(b)
303

【図４】

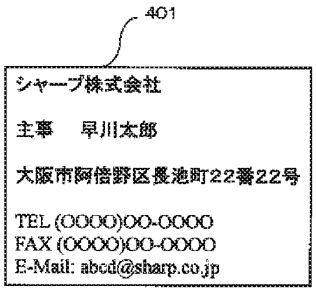
401
シャープ株式会社
主事　早川太郎
大阪市阿倍野区長池町22番22号
TEL (OOOO)OO-OOOO
FAX (OOOO)OO-OOOO
E-Mail: abcd@sharp.co.jp

【図５】

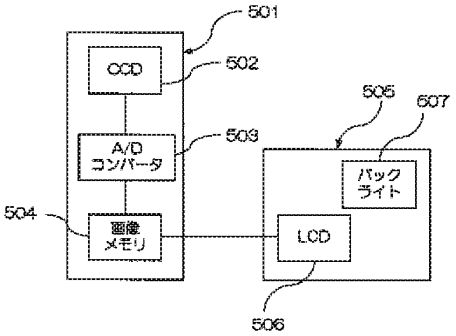
501
CCD
502
A/D
コンバータ
503
505
507
バック
ライト
504
画像
メモリ
LCD
506

【図６】

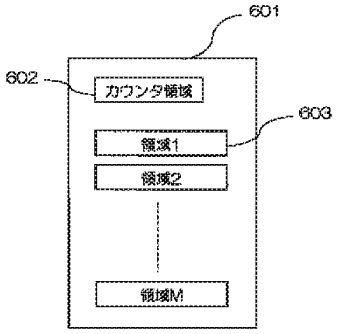
601
602
カウンタ領域
603
領域1
領域2
領域M

【図７】

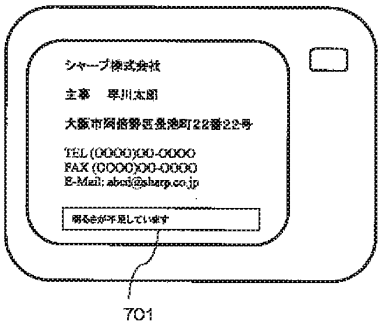
シャープ株式会社
主事　早川太郎
大阪市阿倍野区長池町22番22号
TEL (0000)00-0000
FAX (0000)00-0000
E-Mail: abcd@sharp.co.jp
明るさが不足しています
701

【図８】

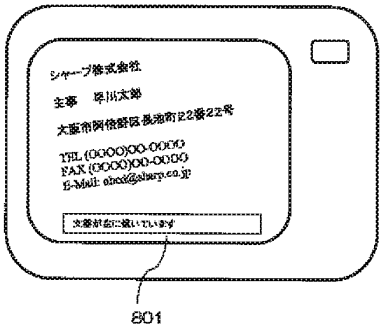
シャープ株式会社
主事　早川太郎
大阪市阿倍野区長池町22番22号
TEL (0000)00-0000
FAX (0000)00-0000
E-Mail: abcd@sharp.co.jp
文書が右に傾いています
801

【図９】

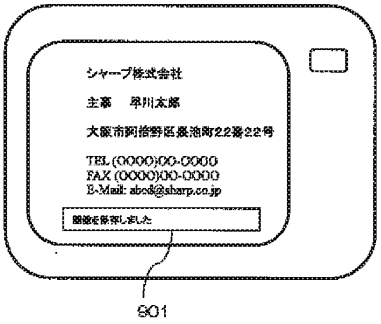

【図１０】

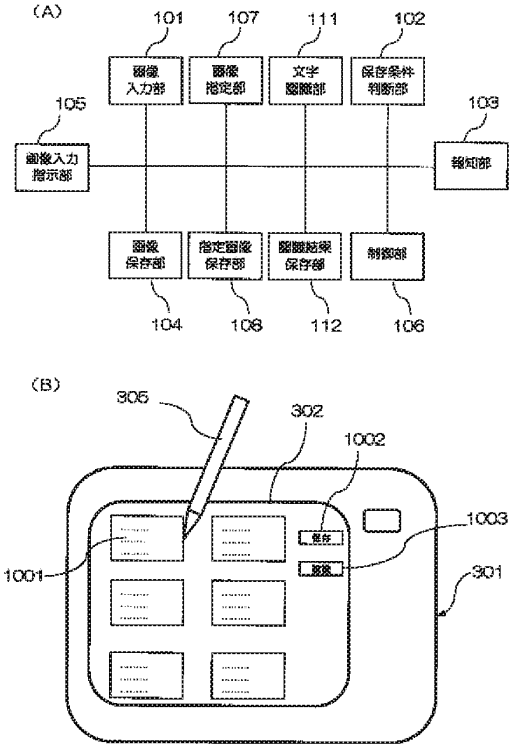

【図１１】

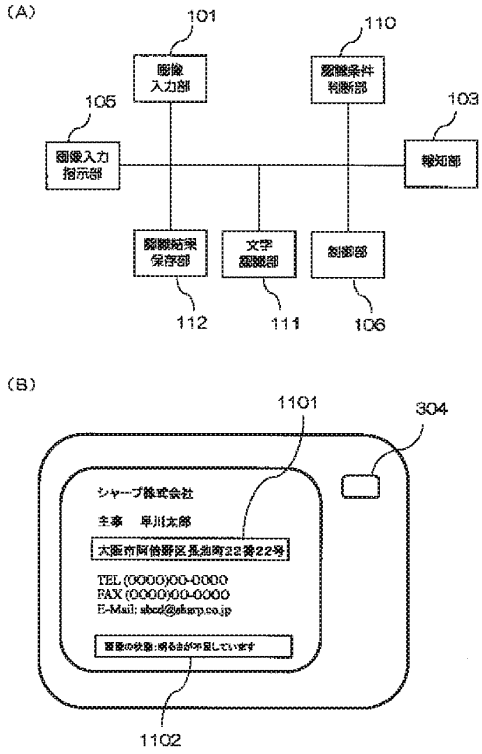

【図１２】

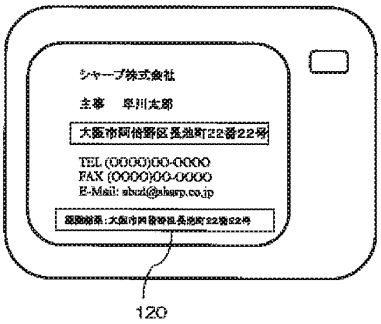

【図１３】

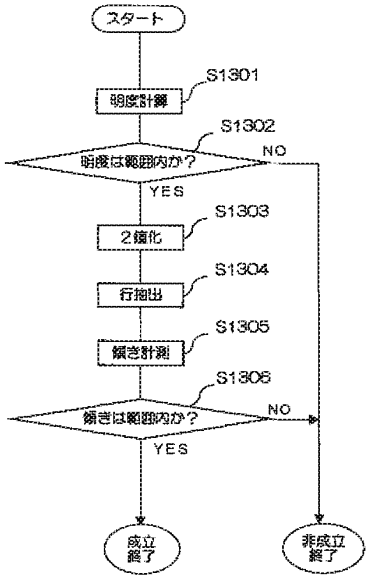
スタート
S1301
明度計算
S1302
明度は範囲内か？
NO
YES
S1303
２値化
S1304
行抽出
S1305
傾き計測
S1306
傾きは範囲内か？
NO
YES
成立
終了
非成立
終了

【図１４】

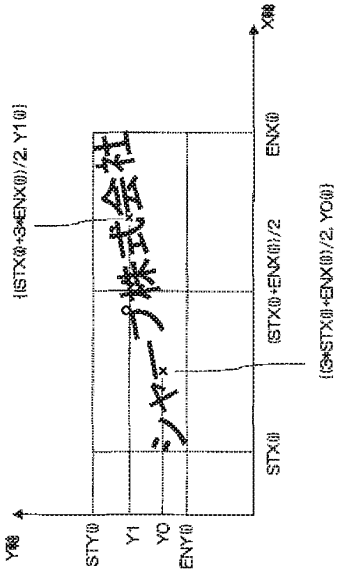
Y軸
X軸
STY(i)
Y1
YO
ENY(i)
STX(i)
(STX(i)+ENX(i))/2
ENX(i)
(STX(i)+3*ENX(i))/2, Y1(i)
(3*STX(i)+ENX(i))/2, YO(i)

フロントページの続き

(51)Int.Cl.[7]	F I		テーマコード（参考）
H04N 5/93	H04N 5/91	L	
// H04N 101:00	H04N 5/93	Z	
	H04N 101:00		

Fターム(参考) 5C053 FA08 FA27 GB21 JA16 KA24 LA01 LA06
5L096 BA17 CA02 DA03 FA14 FA67 JA11

(19) Japanese Patent Office (JP)

(11) Publication number

(12) Laid-open Disclosure Public Patent Bulletin (A)

2004-23158

(P2004-23158A)

(43) Publication Date: January 22, Heisei 16 (2004.1.22)

(51) Int. Cl. [7]	FI		Theme Code (Reference)
H04N 5/92	H04N 5/92	H	5B064
G06K 9/00	G06K 9/00	S	5C022
G06T 7/00	G06T 7/00	300F	5C053
H04N 5/225	H04N 5/225	A	5L096
H04N 5/765	H04N 5/225	F	

Request for Examination: Not Requested

Number of Claims: 10 OL (19 pages total)

Continued to the last page . . .

(21) Application Filing Number:
Tokugan 2002-171616 (P2002-171616)

(22) Application Filing Date:
June 12, Heisei 14 (2002.6.12)

(71) Applicant: 000005049
Sharp Corporation
22-22 Nagaike-cho, Abeno-ku, Osaka-shi, Osaka

(74) Agent: 100062144
Tamotsu Aoyama, Patent Attorney

(74) Agent: 100086405
Osamu Kawamiya, Patent Attorney

(74) Agent: 100084146
Hiroshi Yamazaki, Patent Attorney

(72) Inventor: Kazuhiro Takehara
c/o: Sharp Corporation,
22-22 Nagaike-cho, Abeno-ku, Osaka-shi, Osaka

F-term (reference): 5B064 AA07
5C022 AA13 AC11 AC42 AC69

Continued to the last page . . .

(54) TITLE OF THE INVENTION

Imaging Device

(57) ABSTRACT

OBJECTIVE: To provide an imaging device, which allows the user to readily adjust the shooting conditions to be able to capture an image that is suitable for image recognition and thereby readily obtain images in a good state that can be processed through image recognition.

MEANS FOR RESOLUTION: A storage-requirement assessment part 102 determines whether or not the state of an image captured by an image input part 101 is suitable for image recognition, doing so based on information consisting of storage requirements that are required of an image to be saved as an image suitable for image recognition. Each time the image input part 101 captures an image of a photographic subject, a notification part 103 reports the state of the captured image based on the assessment result of the storage-requirement assessment part 102. And, when the storage-requirement assessment part 102 determines that the state of an image captured by the image input part 101 is suitable for image recognition, said image captured by the image input part 101 is saved in the image storage part 104.

SELECTED DRAWING: Figure 1

WHAT IS CLAIMED IS:

CLAIM 1

An imaging device, comprising:

An image input means, which captures an image of a photographic subject;

A storage-requirement assessment means, which determines whether or not the state of the image captured by the above-mentioned image input means is suitable for image recognition, doing so based on information consisting of storage requirements that are required of an image to be saved as an image suitable for image recognition;

A notification means, which reports the state of the captured image based on the assessment result of the aforementioned storage-requirement assessment means, doing so each time the above-mentioned image input means captures an image of a photographic subject; and

An image storage means, which saves the image captured by the above-mentioned image input means, doing so when the aforementioned storage-requirement assessment means determines that the state of the image captured by the above-mentioned image input means is suitable for image recognition.

CLAIM 2

The imaging device according to Claim 1, comprising:

An image-input command means, which commands that the above-mentioned image input means input an image; and

A control means, which controls the above-mentioned image input means, storage-requirement assessment means, notification means, and image storage means so that the following actions are performed sequentially as long as an image-input command means is commanding that an image be input:

Capturing of an image of a photographic subject by the above-mentioned image input means;

Assessment conducted, by the aforementioned storage-requirement assessment means, to determine whether or not the state of the captured image is suitable for image recognition;

Notification by the aforementioned notification means; and

Storing of the image by the aforementioned image storage means.

CLAIM 3

The imaging device according to Claim 1, wherein the aforementioned image storage means saves more than one image, insofar as the images have been determined to have satisfied the aforementioned storage requirements by the aforementioned storage-requirement assessment means as described above.

CLAIM 4

The imaging device according to Claim 1, comprising:

An image designation means for specifying at least one of the images saved in the aforementioned image storage means; and

A designated-image storage means for saving the image specified by the aforementioned image designation means.

CLAIM 5

The imaging device according to Claim 1, comprising:

An image designation means for specifying at least one of the images saved in the aforementioned image storage means; and

A character recognition means for recognizing characters in the image specified by the aforementioned image designation means.

CLAIM 6

The imaging device according to Claim 5, comprising a character-recognition-result storage means for saving the result of recognition by the aforementioned character recognition means.

CLAIM 7

The imaging device according to Claim 6, wherein the aforementioned notification means reports that the recognition result has been saved in the aforementioned character-recognition-result storage means.

CLAIM 8

The imaging device according to Claim 1, wherein the aforementioned notification means reports that the image has been saved in the aforementioned image storage means.

CLAIM 9

An imaging device, comprising:

An image input means, which captures an image of a photographic subject;

A recognition-requirement assessment means, which determines whether or not the state of the image that has been input by the above-mentioned image input means is suitable for image recognition, doing so based on information consisting of recognition requirements that are required of an image to be regarded as suitable for image recognition;

A notification means, which reports the state of the captured image based on the assessment result of the aforementioned recognition-requirement assessment means, doing so each time the above-mentioned image input means captures an image of a photographic subject; and

An image recognition means, which performs an image recognition process for the image captured by the above-mentioned image input means when the aforementioned recognition-requirement assessment means determines that the state of the image captured by the above-mentioned image input means is suitable for image recognition.

CLAIM 10

The imaging device according to Claim 9, comprising:

An image-input command means, which commands that the above-mentioned image input means input an image; and

A control means, which controls the above-mentioned image input means, recognition-requirement assessment part, notification means, and image recognition means so that the following actions are performed sequentially as long as the image-input command means is commanding that an image be input:

Capturing of an image of a photographic subject by the above-mentioned image input means;

Assessment conducted, by the aforementioned recognition-requirement assessment means, to determine whether or not the state of the captured image is suitable for image recognition;

Notification by the aforementioned notification means; and

Image recognition by the aforementioned image recognition means.

DETAILED DESCRIPTION OF THE INVENTION

[0001]

TECHNOLOGICAL FIELD OF THE INVENTION

This invention pertains to an imaging device. Particularly, it pertains to an imaging device with image recognition features, such as a personal digital assistant, a mobile phone, etc., which is provided with camera features.

[0002]

CONVENTIONAL TECHNOLOGY

Conventionally, OCR (Optical Character Recognition) technologies for image recognition have been employed as technologies that enable the extraction of character information from document images in various devices, such as document readers, business card readers, and ledger sheet readers, etc. Such OCR technologies typically have employed scanners as the means for inputting images. However, along with the advancement of CCD's (Charge Coupled Devices) and CMOS (Complementary Metal Oxide Semiconductor) sensors in recent years, digital cameras that use such devices have gained widespread use as the OCR-based image input means.

[0003] One such imaging device having image recognition features is disclosed in JP,7-72546,A. This imaging device comprises an information processor that is provided with camera features and a character recognition means, and thereby recognizes characters from an image captured with a camera

[0004] Another conventional imaging device equipped with image recognition features is disclosed in JP,2000-207487,A. This imaging device is configured to photograph characters with a CCD video camera, automatically extracts the character region from the captured image, and then obtains a character recognition result through the use of a character recognition means. Furthermore, the aforementioned imaging device can also deliver features such as displaying the character recognition result, processing the data so as to be linked to an application program according to the recognition result.

[0005]

OBJECTIVE TO BE ACHIEVED BY THE INVENTION

Incidentally, the aforementioned imaging device described in JP,7-72546,A is provided with a shutter drive part, and is configured to capture an image of a photographic subject by means of a release operation of the shutter drive part. There is a problem with this imaging device because the user must determine under what kind of shooting conditions an image should be captured; and consequently, the user, when taking a photo, could use only due diligence to capture a good image to the best of one's ability based on his or her judgment that is based on his or her personal experience.

[0006] Also, the aforementioned user-based adjustment of shooting conditions is extremely unreliable because it relies on the user's empirical judgment or rough estimate. Consequently, for example, even when the user deems a shooting condition to be appropriate to take a photo, there is a good chance that the actual image thus captured may not be suitable for character

recognition due to insufficient brightness or the like. Additionally, because an image is captured by means of a release operation of a shutter, there is a likelihood that the image captured may be defective, e.g., tilted, due to the user's careless error or the like while capturing the images. Particularly, if the imaging device is a compact size, the user would take a photo while holding the device with a single hand, or both hands. Consequently, there is a strong likelihood of camera shake due to unsteady hands. Such camera shake, as a result, causes a problem because the captured image will be blurry and unfocused, and therefore will be unusable for character recognition, etc. Therefore, the user must perform the release operation carefully as he or she assesses the shooting conditions. And, this is a great burden to the users.

[0007] Also, the aforementioned imaging device disclosed in JP,2000-207487,A displays the character recognition result every time the CCD video camera captures an image of an object subjected to character recognition.

[0008] However, this imaging device also poses a problem because the user has no way of knowing how he or she can capture an image that is suitable for image recognition, and, as a result, the user has to gradually correct the shooting conditions as he or she monitors the display screen or recognition results. One of shortcomings of the aforementioned imaging device would be the fact that it is configured to recognize characters in only a portion of a captured image, but it does not have a capability to capture an image in such a way that the entire image is suitable for character recognition. Therefore, the aforementioned imaging device is not suitable for applications in which all characters in an image need to be recognized after an image is captured and saved in such a way that the entire image is suitable for character recognition. Another shortcoming of the aforementioned imaging device would be the fact that it is not suitable for applications in which the image of a photographic subject is captured and saved repeatedly, so that multiple images are saved and thus subjected to character recognition, etc.

[0009] Given these factors, a purpose of the present invention is to provide an imaging device that allows the user to adjust shooting conditions to be suitable for image recognition with ease, and thus to readily obtain images in a good state that can be processed through image recognition.

[0010] Another purpose of the present invention is to provide an imaging device that can also recognize all pieces of information contained in multiple images.

[0011]

MEANS FOR ACHIEVING THE OBJECTIVE

In order to achieve the above-mentioned purpose, the imaging device according to the present invention is configured as follows:

An image input means captures an image of a photographic subject;

A storage-requirement assessment means determines whether or not the state of the image captured by the above-mentioned image input means is suitable for image recognition, doing so based on information consisting of storage requirements that are required of an image to be saved as an image suitable for image recognition; and

Each time the above-mentioned image input means captures an image of a photographic subject, a notification means reports the state of the captured image (brightness, tilt, etc.) based on the assessment result of the aforementioned storage-requirement assessment means; and meanwhile

If the aforementioned storage-requirement assessment means determines that the state of the image captured by the image input means is suitable for image recognition,

the image captured by the above-mentioned image input means will be saved in an image storage means.

Here, said image recognition may be a recognition of any image, such as a bar code, fingerprint, facial image, drawing, etc., or a recognition of the combination of two or more types of such images.

[0012] According to the imaging device having the aforementioned configuration, the aforementioned notification means reports the state of a captured image based on the assessment result of the storage-requirement assessment means every time the above-mentioned image input means captures an image of a photographic subject. Therefore, the user can adjust the shooting conditions with ease based on the reported information. Furthermore, only the images that satisfy the storage-requirement information are saved in the aforementioned image storage means; and this makes it possible to save images in a good state, i.e., images suitable for image recognition.

[0013] Also, in the imaging device according to an embodiment, a control means controls the above-mentioned image input means, storage-requirement assessment means, notification means, and image storage means so that the following actions are performed sequentially as long as an image-input command means is commanding that an image be input:

Capturing of an image of a photographic subject by the above-mentioned image input means;

Assessment conducted, by the aforementioned storage-requirement assessment means, to determine whether or not the state of the captured image is suitable for image recognition;

Notification by the aforementioned notification means; and

Storing of the image by the aforementioned image storage means.

[0014] According to the imaging device of the aforementioned embodiment, an image is input and saved as long as the image-input command means is commanding that an image be input; and this makes it possible to implement an imaging device that is easy to use and convenient for the user.

[0015] Also, in the imaging device according to one embodiment, the aforementioned image storage means saves more than one image, insofar as the images have been deemed (by the aforementioned storage-requirement assessment means) to have satisfied the aforementioned storage requirements as described above.

[0016] The imaging device of the aforementioned embodiment makes it possible to implement an imaging device that performs image recognition for all pieces of information that are contained in the multiple images that have been saved in the aforementioned image storage means.

[0017] Also, in the imaging device according to one embodiment, at least one of the images saved in the aforementioned image storage means can be specified by an image designation means; and the specified image(s) can be saved in a designated-image storage means.

[0018] According to the imaging device of the aforementioned embodiment, the user can specify a desired image out of multiple images through the use of the aforementioned image designation means. This makes it possible for the user to save images, which he or she likes, in the aforementioned designated-image storage means.

[0019] Also, in the imaging device according to one embodiment, at least one of the images saved in the aforementioned image storage means can be specified by the image designation means so as to allow the characters in the specified image(s) to be recognized by a character

recognition means.

[0020] According to the imaging device of the aforementioned embodiment, the character recognition means performs its character-recognition process for the image(s) specified by the aforementioned image designation means. This makes it possible for the user obtain character information in a desired image(s).

[0021] Also, the imaging device according to one embodiment is configured to save the aforementioned character recognition means' recognition result in a character-recognition-result storage means.

[0022] Thus, with the imaging device of the aforementioned embodiment, the user can save character information.

[0023] Also, in the imaging device according to one embodiment, the aforementioned notification means provides a notification when a recognition result is saved in the aforementioned character-recognition-result storage means.

[0024] According to the imaging device of the aforementioned embodiment, the user can be made aware of the fact that characters have been recognized from an image that is suitable for image recognition because the aforementioned notification means provides a notification of the completion of character recognition.

[0025] Also, in the imaging device according to one embodiment, the aforementioned notification means provides a notification when an image is saved in the aforementioned image storage means.

[0026] According to the imaging device of the aforementioned embodiment, the user can be made aware of the fact that an image suitable for image recognition has been saved because the aforementioned notification means provides a notification when an image is saved.

[0027] Additionally, the imaging device according to the present invention is configured as follows:

An image input means captures an image of a photographic subject;

A recognition-requirement assessment means determines whether or not the state of the image that has been input by the above-mentioned image input means is suitable for image recognition, doing so based on information consisting of recognition requirements that are required of images to be regarded as suitable for image recognition; and

Each time the above-mentioned image input means captures an image of a photographic subject, a notification means reports the state of the captured image based on the assessment result of the aforementioned recognition-requirement assessment means; and meanwhile

If the aforementioned recognition-requirement assessment means determines that the state of the image captured by the above-mentioned image input means is suitable for image recognition, the image captured by the above-mentioned image input means will be processed through image recognition by the image recognition means.

Here, said image recognition may be a recognition of any image, such as a bar code, fingerprint, facial image, drawing, etc., or a recognition of the combination of two or more types of such images.

[0028] According to the imaging device having the aforementioned configuration, the aforementioned notification means reports the state of the captured image based on the assessment result of the recognition-requirement assessment means every time the above-mentioned image input

means captures an image of a photographic subject; therefore, the user can adjust the shooting conditions with ease based on the information thus reported. Furthermore, only the images that satisfy the recognition-requirement information are subjected to image recognition by the aforementioned image recognition means; and this makes it possible to process only images in a good state (i.e., images suitable for image recognition) through image recognition.

[0029] Also, in the imaging device according to an embodiment, a control means controls the above-mentioned image input means, recognition-requirement assessment means, notification means, and image recognition means so that the following actions are performed sequentially as long as the image-input command means is commanding that an image be input:

Capturing of an image of a photographic subject by the above-mentioned image input means;

Assessment conducted, by the aforementioned recognition-requirement assessment means, to determine whether or not the state of the captured image is suitable for image recognition;

Notification by the aforementioned notification means; and

Image recognition by the aforementioned image recognition means.

[0030] According to the imaging device of the aforementioned embodiment, images are input and recognized as long as the aforementioned image-input command means is commanding that an image be input; and, this makes it possible to implement an imaging device that is easy to use and convenient for the user.

[0031]

EMBODIMENTS OF THE INVENTION

The following is a detailed explanation of the imaging device according to the present invention with reference to the embodiments illustrated in the drawings:

[0032] **(First Embodiment)**

Figure 1 shows a schematic diagram that illustrates the main features of the imaging device according to the first embodiment of the present invention. As shown in Figure 1, said imaging device according to the first embodiment is provided with:

An image input part 101 acting as an image input means;

A storage-requirement assessment part 102 acting as a storage-requirement assessment means;

A notification part 103 acting as a notification means;

An image storage part 104 acting as an image storage means;

An image-input command part 105 acting as an image-input command means; and

A control part 106 acting as a control means.

[0033] And, Figure 5 shows an image-capturing device 501 and a display device 505 as main examples of the constituent elements of the aforementioned image input part 101. This image capturing device 501 is provided with a CCD 502, an A/D (Analog/Digital) converter 503, and an image memory 504 as illustrated in Figure 5. The aforementioned CCD 502 transforms a photographic subject's image into an analog signal; the A/D converter 503 transforms the analog signal sent from the CCD 502 into digital image data; and the digital image data thus

transformed is saved in the image memory 504. And, the digital image data saved in the aforementioned image memory 504 is displayed on the display device 505. This display device 505 is provided with an LCD (Liquid-Crystal Display) 506 and a backlight 507.

[0034] The storage-requirement assessment part 102 illustrated in Figure 1 retains storage-requirement information that is referred to when determining whether image data in the image input part 101 (more specifically, within the image memory 504 illustrated in Figure 5) is suitable for image recognition, and thus acts as a means for determining whether or not the aforementioned image data satisfies the aforementioned storage requirements. Here, the term "storage requirements" refers to information consisting of requirements such as the brightness of an image must be appropriate, the image must not be tilted, and so forth. Detailed examples of such requirements are mentioned in a later section.

[0035] Also, the aforementioned notification part 103 acts as a means for providing the user with information such as the state of an image, and instructions to help the user to capture an image that is eligible to be saved — doing so when the storage requirements are not satisfied according to the result of assessment by the storage-requirement assessment part 102.

[0036] And, the aforementioned image storage part 104 acts as a means for saving image data, which is present in the image input part 101 at the moment when the storage-requirement assessment part 102 deems an image to be suitable for storage. To be more specific, RAM (Random Access Memory) or the like falls within this category. It should be noted that a flash memory, a magnetic disk, etc., may be used as the aforementioned image storage part 104 so that data can be retained without supply of power.

[0037] Furthermore, the aforementioned image storage part 104 is configured with an ability to save multiple images, for example, as shown in Figure 6. The image storage area 601 in Figure 6 comprises a counter region 602 and a prescribed number (M-number) of image storage regions 603 so that each set of image data is saved in an image storage region that is assigned with a numerical value specified by a counter provided within the counter region 602.

[0038] And, the image-input command part 105 illustrated in Figure 1 acts as a means for commanding that the operations of the image input part 101, the storage-requirement assessment part 102, the notification part 103, and the image storage part 104 be enabled. The specific examples include a switch and the like.

[0039] Also, the aforementioned control part 106 controls the image input part 101, the storage-requirement assessment part 102, the notification part 103, and the image storage part 104 so that the following actions are performed sequentially as long as the image-input command part 105 is commanding that an image be input:

Input of an image by the image input part 101;

Assessment conducted, by the storage-requirement assessment part 102, to determine whether or not the state of an image is suitable for image recognition;

Notification by the notification part 103; and

Storing of the image in the image storage part 104.

[0040] Figure 3 (a) and (b) illustrates an imaging device of a portable terminal type provided with a camera, such an imaging device being presented herein as a specific example of the configuration of the present first embodiment. Figure 3 (a) shows an elevational view while Figure 3 (b) shows a back-side view. This imaging device is provided with a main body 301, a display 302, a camera 303, and an activation button 304.

[0041] The camera 303 shown in Figure 3 (b) corresponds to the image input part 101 (illustrated in

Figure 1). The activation button 304 illustrated in Figure 3 (a) corresponds to the image-input command part 105 (illustrated in Figure 1).

[0042] Next is an explanation of the operation of said imaging device according to the first embodiment with reference to the flowchart shown in Figure 2. Here, the explanation is presented on the assumption that the user is trying to capture and save the image of a document to be recognized, i.e., a business card 401 shown Figure 4, in order to use the information in an address book, etc., once the characters are recognized.

[0043] First, in Step S201 of Figure 2, the user uses the image-input command part 105 to command and thus initiate an input of the image (by means of pressing and then holding the activation button 304 shown in Figure 3 (a)).

[0044] Next, in Step S202, the counter within the image storage part 104 (the numerical value within the counter region 602 shown in Figure 6) is reset so that the value of the counter returns to 1.

[0045] Next, in Step S203, the image input part 101 (i.e., camera 303 illustrated in Figure 3(b)) initiates the process of capturing an image of a photographic subject (business card 401).

[0046] Next, in Step S204, the storage-requirement assessment part 102 determines whether or not the image data within the image input part 101 satisfies the storage requirements. A detailed description of the storage requirements concerned and the determination by the storage-requirement assessment part 102 will be provided in a later section.

[0047] Next, in Step S205, if the storage-requirement assessment part 102 determines that the image data does not satisfy the storage requirements based on the result obtained in Step S204, the control will proceed to Step S206; whereas, if the storage-requirement assessment part 102 determines that the image data satisfies the storage requirements, the control will proceed to Step S207.

[0048] In Step S206, the notification part 103 reports the state of the image since the image data does not satisfy the storage requirements; and then, the control proceeds to Step S209. For example, in the case in which the storage-requirement assessment part 102 determines that the brightness is insufficient, the notification part 103, in Step S206, reports information that states, "The brightness is insufficient" as indicated by the reference code 701 in Figure 7. Or, if the storage-requirement assessment part 102 determines that the image is tilted, the notification part 103 reports information that states, "The document is tilted to the left" as indicated by the reference code 801 in Figure 8.

[0049] However, when the control successfully proceeds from Step 205 to Step 207, the image data within the image input part 101 is saved in the image storage part 104 in Step S207. In the present embodiment, when the counter value (i.e., the value in the counter region 602 of Figure 6) is "m," the image data is saved in the m-th image storage region 603.

[0050] Next, in Step S208, the counter value is incremented by one. The quantity of the regions is "M" in Figure 6; however, when the counter value "m" becomes greater than "M" (m > M), the "m" will be reset to 1 (m = 1).

[0051] Next, in Step S209, the course of the next processing is determined in accordance with whether or not the user continues to command an input through the use of the image-input command part 105 (i.e., whether or not the user continues to press the activation button 304 shown in Figure 3 (a)). If the user continues to command an input, the control returns to Step S203; whereas, if there is no more input command, the control ends the processing.

[0052] Hence, in the present embodiment, the processes in the steps S203, S204, S205, S206, and S209 will be repeated as long as the storage-requirement assessment part 102 deems that

the state of the captured image does not satisfy the storage requirements while the image-input command part 105 is making the command (i.e., while the activation button 304 is being pressed in the case of the example shown in Figure 3 (a)).

[0053] In this way, the user is allowed to adjust the state of capturing an image (such as brightness, tilt, etc.) based on the information on the state of the image that has been reported by the notification part 103 each time.

[0054] Then, after the user adjusts the state of capturing an image, if the storage-requirement assessment part 102 determines that the state of the captured image satisfies the storage requirements, the control proceeds from Step S205 to Step S207 and the subsequent steps so as to save the image.

[0055] The following is a detailed explanation of the assessment of the state of an image performed in the aforementioned step S204, with reference to the flowchart shown in Figure 13 and the chart shown in Figure 14. Figure 13 shows a flowchart that illustrates the processing performed when determining the state of an image. Figure 14 shows a chart that illustrates how the inclination of a character string is detected.

[0056] First, the brightness (luminosity) of an image in the image input part 101 is calculated in the first step of Figure 13 (i.e., Step S1301); and then, in Step S1302, it is assessed whether the numerical value thus calculated is an appropriate value.

[0057] When the image in the image input part 101 is a black-and-white multivalued image, the luminosity is calculated by the following equation 1:

[Equation 1]

$$\text{Luminosity } L = \frac{\sum_{i=1,j=1}^{i\leq w,\, j\leq h} P(i,j)}{\text{Quantity of horizontal pixels in image} \times \text{Quantity of vertical pixels in image}}$$

(Wherein, P (i, j) represents the pixel value at the coordinates (i, j) within the image; and "w" represents the quantity of widthwise pixels in the image while "h" represents the quantity of vertical pixels in the image).

Even with a color image — e.g., even when the image is output in R (red), G (green), and B (blue) — the luminosity can be calculated by the aforementioned equation once the image is transformed on a pixel-by-pixel basis into a black-and-white multivalued image based on the following equation: Post-transformation pixel value = (R+G+B) / 3.

[0058] Typically, the accuracy of recognition diminishes in cases where the luminosity of an image is either too low or too high to an extreme level. Accordingly, the storage-requirement information includes the following requirements in regard to the above-mentioned luminosity L thus calculated:

A conditional expression indicating that the value of luminosity is appropriate if $L0 \leqq L$ and $L \leqq L1$; and

Values of the lower limit L0 and the upper limit L1.

[0059] In Step S1302, the storage-requirement assessment part 102 assesses whether the luminosity L satisfies the storage-requirement information, i.e., whether the luminosity L satisfies $L0 \leqq L$ and $L \leqq L1$. If the luminosity L does not satisfy these requirements, the storage-requirement assessment part 102 concludes that the storage requirements are not satisfied; and, thus, the

process is terminated. In this state, the reasons why the image failed to satisfy the requirements are already identified; and, furthermore, it is easy to calculate how the user should change the shooting condition in order to capture an image that will be suitable for the storage requirements.

[0060] For example, if L < L0, it means that the brightness is insufficient; therefore, the user needs to change the shooting condition to a brighter setting. Figure 7 shows an example of a notification that reports such a state.

[0061] Based on the reported information on the display, the user can become aware that the current shooting environment is too dark to capture an image with a quality that is good enough to capture and save a character image, so that the user can improve the shooting environment accordingly, for example, by lightening the room. Then, if the brightness requirements are satisfied when the control proceeds to Step S1302 for the second time, the control proceeds to Step S1303 next.

[0062] In the processes from Step S1303 to Step S1306, any tilt in the business card 401 is measured; and it is assessed whether or not the tilt is within an acceptable range. It should be noted that there are various techniques that can be employed to complete the processing that is run to measure inclination of an image. For example, in the case in which a document image is a multivalued image, the measurement concerned can be easily obtained through a technique that is described in a later section, said method involving the following steps:

First, a document image is binarized;

Next, character strings in the image are extracted;

Subsequently, the average inclination of all the individual character strings is calculated; and

The mean value thus obtained is used as the inclination value of the image.

[0063] First, in Step S1303, the image in the image input part 101 is subjected to a binarization process. If the image is a black-and-white multivalued image, the threshold value of binarization will be obtained in the as-is condition. If the image is a color image (e.g., when the image is expressed in RGB, etc.), the threshold value will be obtained after the color image is transformed into a black-and-white multivalued image through the aforementioned conversion process. Once the threshold value is determined, the black-and-white multivalued image can now be transformed into a binary image by means of converting each pixel into 1 (character component) if below the threshold value, but into 0 (background component) if at or above the threshold value. While there are various techniques that can be used to obtain a binarization threshold value, a discriminant analysis technique referred to as "Otsu's algorithm," for example, may be used to make it easier to obtain the threshold value.

[0064] Next, a character-string (-row) extraction process is performed in Step S1304. While there are various techniques that can be used to extract character strings, JP,3058489,B, for example, discloses a "character-string extraction method," which involves extraction of character strings from a document image. And, this method may be used to make the extraction of character strings easier in the present embodiment, also.

[0065] Next, inclination of each character string is measured in Step S1305. While there are various types of methods that can be used to measure inclinations of character strings, the inclination can be obtained, for example, through the following method. (In the following, the method is described with reference to Figure 8.) The quantity of the rows and the coordinates of the circumscribed frame of each row are extracted through the row-extraction process in Step S1304. On the assumption that an N-quantity of rows has been extracted (N = 6 in the present embodiment), the upper left coordinates of each row "i" (i = 1 to N) are defined as {STX (i),

STY(i)}; and the lower right coordinates are defined as {ENX(i), ENY(i)}. Each of said rows is divided into two (into the right and left regions) at the position of X-coordinate value = (STX(i) + ENX(i)) / 2. Here, a left region shall be defined as A0, and a right region shall be defined as A1. Barycenters Y0 and Y1 in the direction of Y are obtained for each of the regions A0 and A1, respectively, as follows:

[0066] **[Equation 2]**

$$Y0 = \sum_{y=ENY(i)}^{STY(i)} \frac{y \times M0(y)}{\text{Total quantity of character pixels within A0}}$$

(Wherein, M0 (y) represents the quantity of character pixels that are present on a straight line along the Y-coordinate "y" within a region A0.)

Also, the barycenter Y1 can be obtained by the same equation.

[0067] The inclination θ(i) [degrees] of each row i (i = 1 to N) can be expressed through the use of the above-mentioned barycenters Y0 and Y1 as follows:

$$\begin{aligned} \tan\theta(i) &= (Y1-Y0)/\{(ENX(i)-STX(i))/2\} \\ &= 2\times(Y1-Y0)/\{(ENX(i)-STX(i))\} \end{aligned}$$

Therefore, the inclination θ(i) is obtained by the following equation:

θ(i) = arctan {2 x (Y1 - Y0) / {(ENX(i) - STX(i))}.

Lastly, the mean value θ of inclination values θ(i) is calculated and used as the inclination.

[0068] A method that can be used to measure inclination of an image is described in the foregoing; however, the present invention is not limited to the foregoing method but may employ other various measurement methods.

[0069] Next, in Step S1306 of Figure 13, it is determined whether or not the inclination thus obtained in Step S1305 is satisfactory as an object to be processed through the recognition. Generally, the accuracy of OCR recognition diminishes when a document image to be recognized has a significant tilt.

[0070] Herein, the acceptable range of inclination is defined as within α [degrees] based on the results of a recognition experiment, etc. Hence, the following condition is included in the constituent elements of the storage-requirement information: If -α ≦ θ and θ ≦ α, then the inclination is in the acceptable range.

[0071] If it is determined in Step S1306 that the inclination thus obtained in Step S1305 is not satisfactory (i.e., when θ < - α or α < θ), it is concluded that the image concerned does not satisfy the storage requirements; and thus, the process is terminated. An example of a notification provided at this time in order to report the state of an image concerning inclination is illustrated in Figure 8 — as indicated by the reference code 801 with a phrase that reads, "The document is tilted to the left."

[0072] As such, the aforementioned imaging device according to the first embodiment is configured to save images according to the results of assessments conducted by the storage-requirement assessment part 102 based on the storage-requirement information — i.e., it is configured to save images on the basis of accurate storage-requirement information, instead of unreliable standards (such as the user's empirical judgment, etc.) — and therefore can preserve images

in a good state that is suitable for image recognition. Additionally, each image is saved only when it satisfies the storage requirements, meaning that only the images that satisfy the storage requirements are saved. This makes it possible to eliminate the risk that the user may capture an image that is unsuitable for image recognition due to careless errors during the release operation, such as camera shake. Furthermore, because the notification part 103 reports the state of the captured image after each shoot, the user can adjust the shooting conditions appropriately based on the reported state of the captured image.

[0073] Moreover, the present embodiment is easy to use and convenient for the user because images are input as long as the aforementioned image-input command part 105 is commanding that an image be input.

[0074] In the above-mentioned first embodiment, multiple storage regions are provided within an image storage part 104, said storage regions being configured to be updated sequentially. However, only a single storage region may be provided and configured so as to update and save an image that is suitable to be saved. It is also possible to configure the single storage region or multiple storage regions so as to prevent a new image from being saved therein once an image is saved in the single storage region or every one of multiple storage regions.

[0075] Additionally, as shown in Figure 9, the present embodiment can be readily configured to use a display, an audio feature, such as an alarm, etc., in order report that an image has been saved in the image storage part 104. In Figure 9, the report is provided by indicating a text image that reads, "The image has been saved," on the display screen — as indicated by the reference code 901; however, the present embodiment can be readily configured to report such content through the use of an audio feature, such as an alarm, etc.

[0076] Furthermore, because the notification part 103 reports that the image has been saved, the user can be made aware that the image has been saved.

[0077] **(Second Embodiment)**

Figure 10 (A) shows a schematic diagram that illustrates the main features of a portable terminal, which is presented herein as an example of the imaging device according to the second embodiment of the present invention. As illustrated in Figure 10 (A), said imaging device according to the second embodiment is provided with:

An image input part 101 acting as an image input means;

A storage-requirement assessment part 102 acting as a storage-requirement assessment means;

A notification part 103 acting as a notification means;

An image storage part 104 acting as an image storage means;

An image-input command part 105 acting as an image-input command means;

A control part 106 acting as a control means;

An image designation part 107 acting as an image designation means;

A designated-image storage part 108 acting as a designated-image storage means;

A character recognition part 111 acting as a character recognition means; and

A recognition-result storage part 112 acting as a character-recognition-result storage means.

[0078] Being provided with an image designation part 107, and a designated-image storage part 108

that is capable of retaining memory data without supply of power — e.g., a flash memory, a magnetic disk, etc. — the present portable terminal according to the second embodiment allows the user to specify an image saved in the image storage part 104 through the use of the image designation part 107 so as to save the specified image in the designated-image storage part 108.

[0079] Also, being provided with a character recognition part 111 and an image designation part 107, and (in place of the aforementioned designated-image storage part) a recognition-result storage part 112 that can save character recognition results, the portable terminal according to the second embodiment uses the character recognition part 111 to recognize characters in an image specified by the image designation part 107, and then save the result of the character recognition in the recognition-result storage part 112.

[0080] Figure 10 (B) shows an elevational view of the aforementioned portable terminal. In Figure 10 (B), the user specifies a single image from images 1001 in the image storage part 104 (shown in Figure 10 (A)) as they are displayed on the display part 302, doing so through the use of an operating pen 305 acting as an image designation means.

[0081] Once the user selects the Save Image button 1002, the specified image is saved in the designated-image storage part 108 that is embedded. Also, when the user selects the Start Recognition button 1003, the character recognition part 111 recognizes characters in the specified image. The recognition result is displayed on the screen upon completion of the recognition and saved in the recognition-result storage part 112.

[0082] In this way, the aforementioned portable terminal according to the second embodiment saves multiple images in the aforementioned image storage part 104 and allows the user to specify an image through the use of the image designation part 107, thereby making it possible for the user to save a desired image. Also, because the image specified by the aforementioned image designation part 107 is subjected to character recognition by the character recognition part 111, the user can obtain the character information from a desired image.

[0084] Furthermore, in the aforementioned portable terminal according to the second embodiment, the character information is also saved when the result of recognition by the aforementioned character recognition part 111 is saved in the recognition-result storage part 112.

[0085] Furthermore, because the notification part 103 reports that the result of recognition by the character recognition part 111 has been saved, the user can be made aware that the character recognition has been completed

[0086] **(Third Embodiment)**

Figure 11 (A) shows a schematic diagram that illustrates the main features of the imaging device according to the third embodiment of the present invention. As illustrated in Figure 11 (A), the present imaging device according to the second embodiment is provided with:

An image input part 101 acting as an image input means;

A notification part 103 acting as a notification means;

An image-input command part 105 acting as an image-input command means;

A control part 106 acting as a control means;

A recognition-requirement assessment part 110 acting as a recognition-requirement assessment means;

A character recognition part 111 acting as an image recognition means; and

A recognition-result storage part 112 acting as a character-recognition-result storage means.

[0087] In the aforementioned portable terminal according to the third embodiment, the recognition-requirement assessment part 110 retains information consisting of recognition requirements that are used to determine whether image data in the image input part 101 is suitable for image recognition, and thereby determines whether or not the aforementioned image data satisfies the aforementioned recognition requirements. And, when it is determined based on the result of an assessment by recognition-requirement assessment part 110 that the recognition requirements are not satisfied, the aforementioned notification part 103 provides the user with information such as the state of the image and instructions to help the user capture an image that is eligible to be saved. Also, the aforementioned character recognition part 111 recognizes characters in the image data, which is in the image input part 101 at the moment when the recognition-requirement assessment part 110 deems an image to be suitable for character recognition. Then, the recognition result of the character recognition part 111 thus obtained is saved in the recognition-result storage part 112.

[0088] Also, the aforementioned control part 106 controls the image input part 101, the notification part 103, the recognition-requirement assessment part 110, the character recognition part 111, and the recognition-result storage part 112 so that the following actions are performed sequentially as long as the image-input command part 105 is commanding that an image be input:

Input of an image by the image input part 101;

Assessment conducted, by the recognition-requirement assessment part 110, to determine whether or not the state of a captured image is suitable for character recognition;

Notification by the notification part 103;

Character recognition by the character recognition part 111; and

Storing in the recognition-result storage part 112.

[0089] Also, Figure 11 (B) shows an elevational view of the aforementioned portable terminal, which illustrates an example notification of the state of an image (in regard to the brightness). Figure 12 illustrates an example notification of the recognition result of the image.

[0090] In Figure 11 (B), an object-of-recognition area 1101 is displayed on the screen upon input of an image. And, as long as the user is pressing the activation button 304 (image-input command part 105) for the object-of-recognition area 1101 concerned, the recognition-requirement assessment part 110 assesses whether or not the recognition-requirement information has been satisfied.

[0091] Here, the recognition-requirement assessment part 110 may determine whether or not the recognition-requirement information is satisfied in the same way as in the case of determining whether or not an image satisfies storage requirements as described in reference to the first embodiment.

[0092] Every time the recognition-requirement information is not satisfied, the state of the captured image is reported, for example, with a phrase, "Image status: The brightness is insufficient" — as indicated by the reference code 1102 in Figure 11 (B). Figure 11 (B) illustrates the example (an example displayed when the brightness is insufficient).

[0093] On the other hand, when the recognition-requirement information is satisfied, the recognition result for the object-of-recognition area 1101 is displayed on the screen as shown in Figure 12. The notification reads, "Recognition result: 22-22 Nagaike-cho, Abeno-ku, Osaka-shi," as

indicated by the reference code 1201 in Figure 12.

[0094] In this way, the aforementioned portable terminal according to the third embodiment recognizes an image according to the result of an assessment conducted by the recognition-requirement assessment part 110 based on the recognition-requirement information. Thus, it can recognize an image accurately on the basis of the recognition-requirement information, instead of on unreliable standards (such as the user's empirical judgment, etc.), thereby making it possible to ensure that recognition is rendered onto an image that has been captured in shooting conditions that are suitable for image recognition. Moreover, an image is subjected to image recognition only when it satisfies the recognition requirements, meaning that only the images that satisfy the recognition requirements are recognized. This makes it possible to eliminate the risk that the user may capture an image that is unsuitable for recognition due to careless errors during the release operation, such as camera shake. Similarly, an image is subjected to character recognition only when it satisfies the recognition requirements, meaning that character recognition is rendered only to images that are suitable for the recognition, thereby making it possible to deliver an improved recognition accuracy. Furthermore, because the notification part 103 reports the state of the captured image after each shoot, the user can adjust the shooting conditions appropriately based on the reported state of the captured image.

[0095] Although an imaging device having a character recognition functionality for the image recognition feature is described herein as the aforementioned first through third embodiments, the application of the present invention is not limited to character recognition, but the present invention may be applied to an imaging device having general image recognition functionalities, such as recognition of bar codes, fingerprints, facial images, drawings, etc.

[0096] The imaging device according to the present invention is not limited to the aforementioned first through third embodiments, but may be applied to, for example, an imaging device composed of the combination of the second and third embodiments, thus being provided with a storage-requirement assessment part and a recognition-requirement half-step part that are used to save images and perform image recognition.

[0097]

EFFECT OF THE INVENTION

As is evident from the description above, the imaging device according to the present invention can preserve images in a good state that is suitable for image recognition because it is configured to save images according to the results of assessments conducted by the storage-requirement assessment means based on the storage-requirement information, thereby allowing that the image storage means to save images on the basis of the accurate storage-requirement information obtained through experimental testing and the like, instead of on unreliable standards (such as the user's empirical judgment, etc.). Furthermore, an image is saved only when it satisfies the storage requirements, meaning that only the images that satisfy the storage requirements are saved. This makes it possible to eliminate the risk that the user may capture an image that is unsuitable for recognition due to careless errors during the release operation, such as camera shake. Furthermore, because the notification means reports the state of the captured image after each shoot, the user can adjust the shooting conditions appropriately based on the reported state of the captured image.

[0098] Also, the imaging device according to the present invention can ensure that recognition is rendered onto an image captured in shooting conditions that are suitable for image recognition because it is configured to render image recognition (recognition of characters, a bar code, a fingerprint, a face, a drawing, etc.) according to the result of an assessment conducted by the recognition-requirement assessment part based on the recognition-requirement information, thereby allowing the image recognition means to recognize an image on the basis of accurate storage-requirement information obtained through experimental testing and the like, instead of

unreliable standards (such as the user's empirical judgment, etc.). Furthermore, an image is subjected to image recognition only when it satisfies the recognition requirements, meaning that only the images that satisfy the recognition requirements are recognized. This makes it possible to eliminate the risk that the user may capture an image that is unsuitable for recognition due to careless errors during the release operation, such as camera shake. Similarly, each image is subjected to character recognition only when it satisfies the recognition requirements, meaning that character recognition is rendered only to images that are suitable for the recognition, thereby making it possible to deliver an improved recognition accuracy. Furthermore, because the notification means reports the state of the captured image after each shoot, the user can adjust the shooting conditions appropriately based on the reported state of the captured image.

BRIEF EXPLANATION OF THE DRAWINGS

[Figure 1]

Figure 1 shows a block diagram of the imaging device according to the first embodiment of the present invention.

[Figure 2]

Figure 2 shows a flowchart of the aforementioned imaging device.

[Figure 3]

Figure 3 (a) shows an elevational view that illustrates an imaging device of a portable terminal type provided with a camera; and Figure 3 (b) shows a back-side view of the aforementioned imaging device.

[Figure 4]

Figure 4 shows a diagram that illustrates a document (business card) to be recognized.

[Figure 5]

Figure 5 shows a block diagram that illustrates constituent elements of the image input part in the aforementioned imaging device.

[Figure 6]

Figure 6 shows a diagram that illustrates constituent elements of the image storage part in the aforementioned imaging device.

[Figure 7]

Figure 7 shows a diagram that illustrates an example of a notification concerning the state of an image (in regard to the brightness).

[Figure 8]

Figure 8 shows a diagram that illustrates an example of a notification concerning the state of an image (in regard to the tilt).

[Figure 9]

Figure 9 shows a diagram that illustrates an example of a notification concerning the state of an image (in regard to the tilt).

[Figure 10]

Figure 10 (A) shows a block diagram of a portable terminal presented herein as an example of the imaging device according to the second embodiment of the present invention.

Figure 10 (B) shows an elevational view of the aforementioned portable terminal.

[Figure 11]

Figure 11 (A) shows a block diagram of a portable terminal presented herein as an example of the imaging device according to the third embodiment of the present invention.

[Figure 12]

Figure 12 shows a diagram that illustrates an example of a notification of the result of the recognition of an image by the aforementioned portable terminal.

[Figure 13]

Figure 13 shows a flowchart that illustrates the processing performed to assess the state of an image in the aforementioned image recognition device according to the first embodiment.

[Figure 14]

Figure 14 shows a diagram that illustrates an example of the detection of an inclination of a character string in the aforementioned image recognition device according to the first embodiment.

DESCRIPTION OF REFERENCE CODING

101 — Image input part

102 — Storage-requirement assessment part

103 — Notification part

104 — Image storage part

105 — Image-input command part

106 .... Control part

107 — Image designation part

108 — Designated-image storage part

110 — Recognition-requirement discrimination part

111 — Character recognition part

112 — Recognition-result storage part

301 — Main body

302 — Display

303 — Camera

304 — Activation button

305 — Operating pen

401 — Business card

501 — Image capturing device

502 — CCD

503 — A/D converter

504 — Image memory

505 — Display device

506 — LCD

507 — Backlight

601 — Image storage area

602 — Counter region

603 — Image storage region

701 — Example notification of the state of an image upon its capture (in regard to the brightness)

801 — Example notification of the state of an image upon its capture (in regard to the tilt)

901 — Example notification provided when an image is saved

1001 — An image out of multiple saved images

1002 — Save-Image button

1003 — Start-Recognition button

1101 — Object-of-recognition area

1102 — Example notification of the state of an image

1201 — Example notification of the result of a recognition

Figure 1

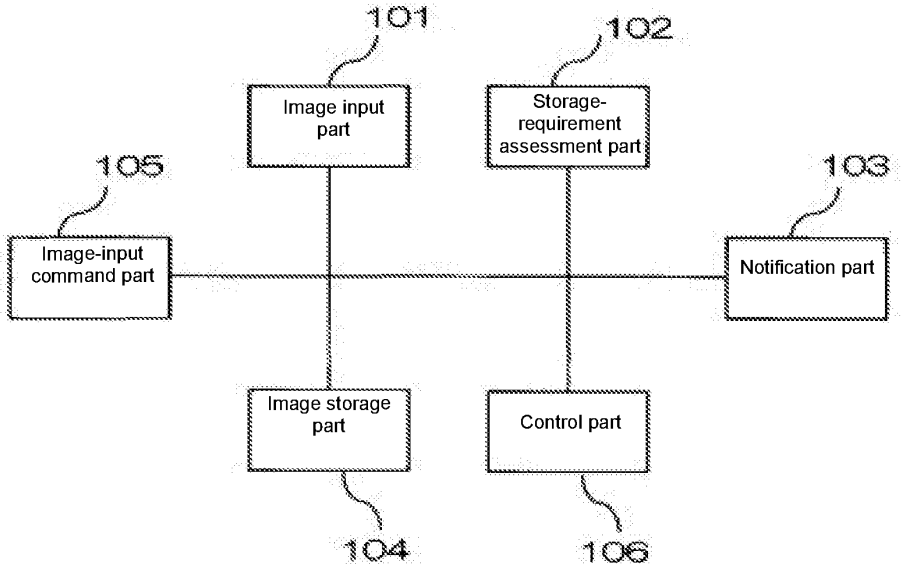
101
102
Image input part
Storage-requirement assessment part
105
103
Image-input command part
Notification part
Image storage part
Control part
104
106

Figure 2

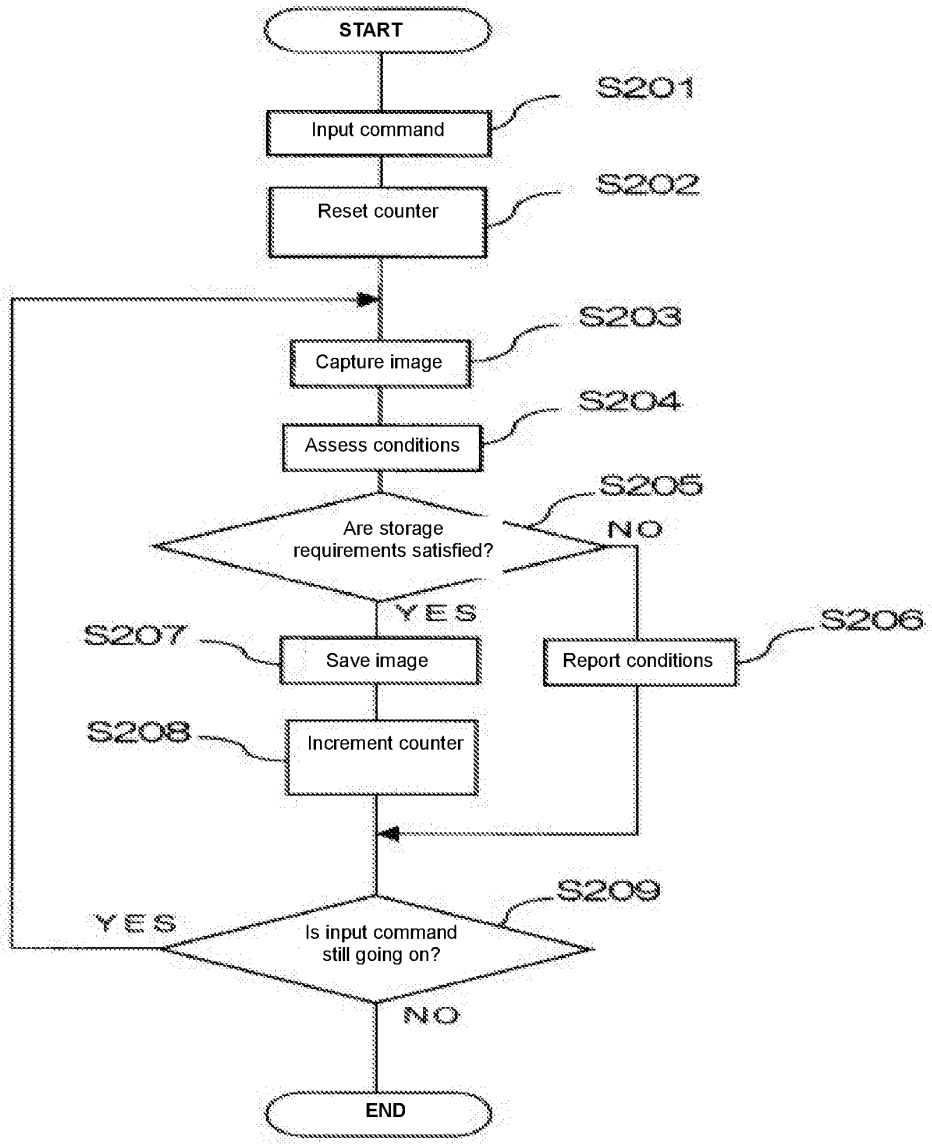
START
S201
Input command
S202
Reset counter
S203
Capture image
S204
Assess conditions
S205
Are storage requirements satisfied?
NO
YES
S207
Save image
S206
Report conditions
S208
Increment counter
S209
YES
Is input command still going on?
NO
END

Figure 3

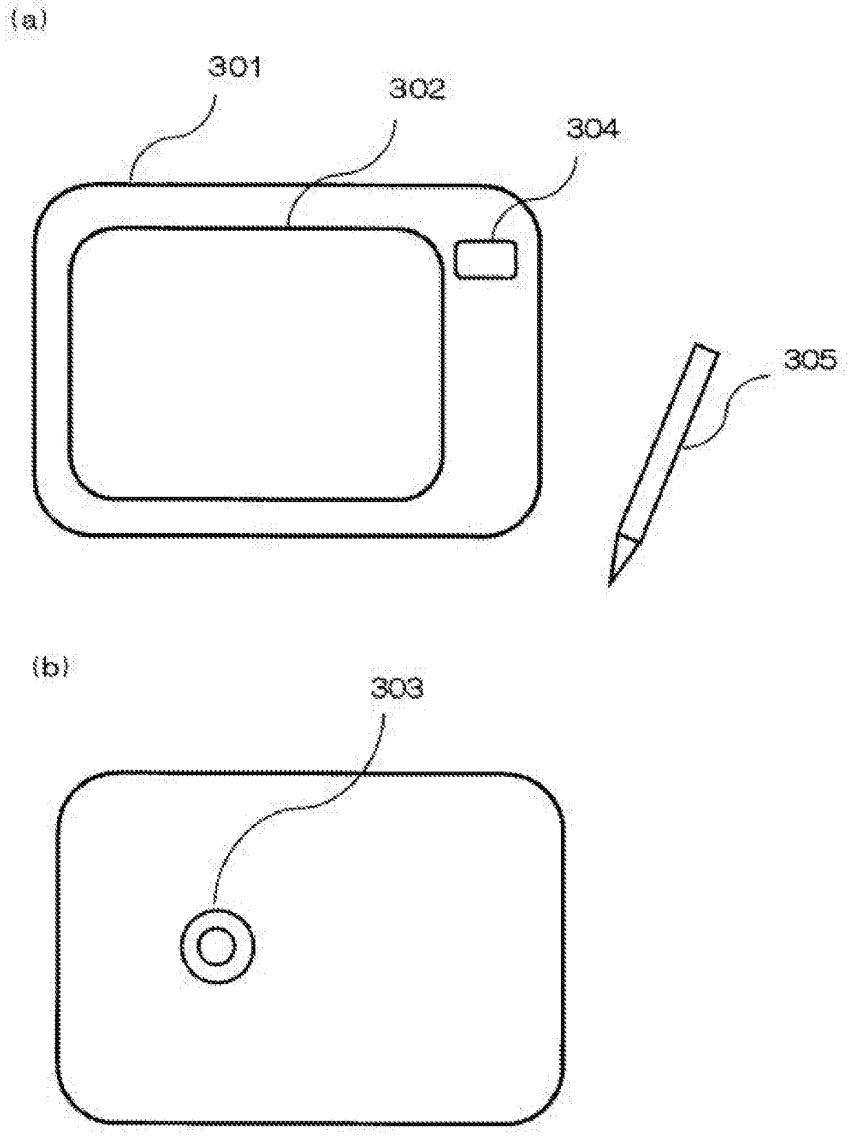

Figure 4

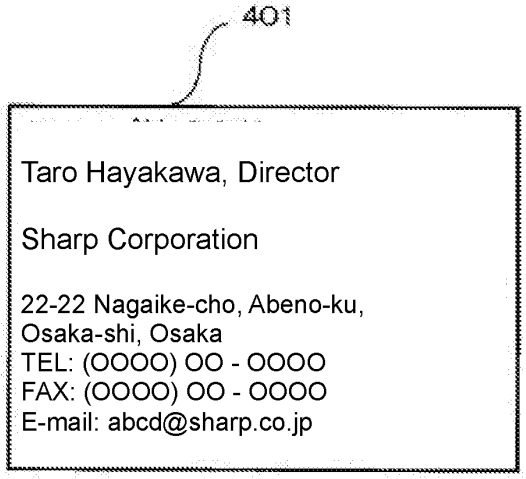

Figure 5

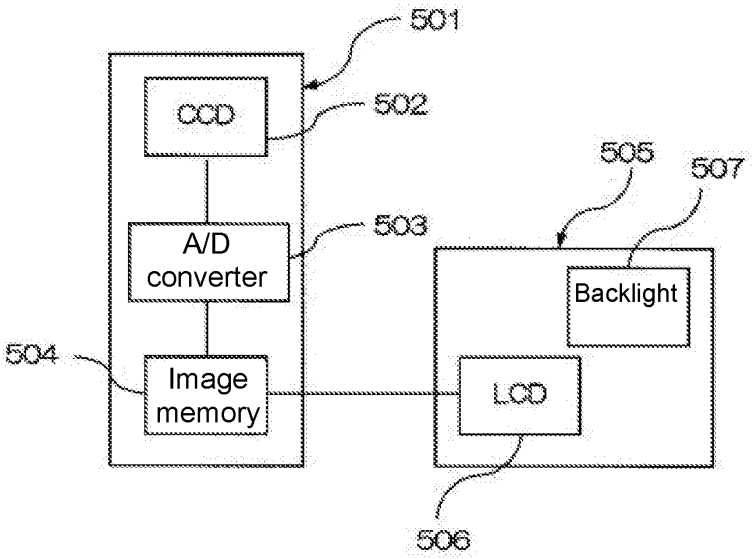

Figure 6

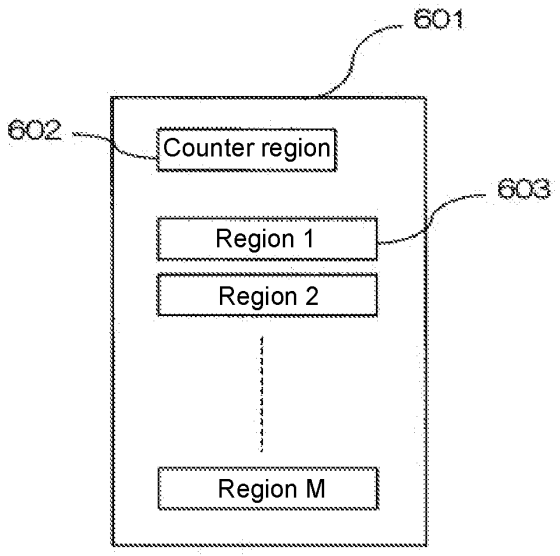

Figure 7

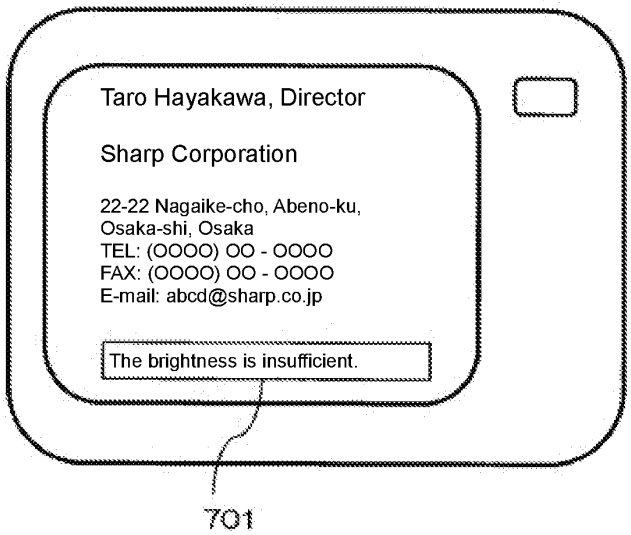

Figure 8

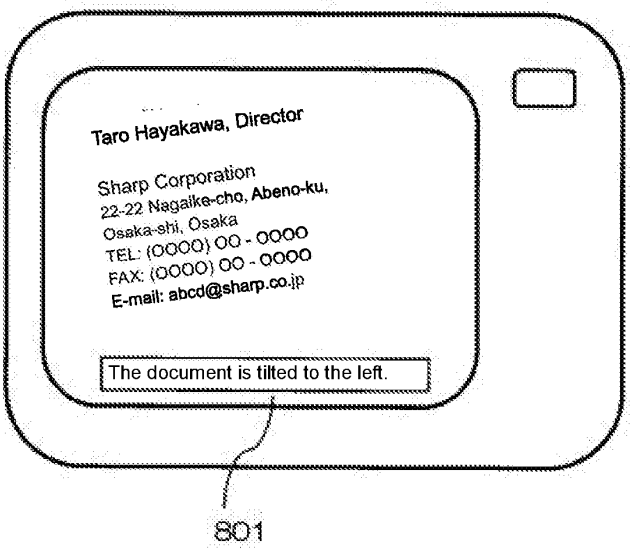

Figure 9

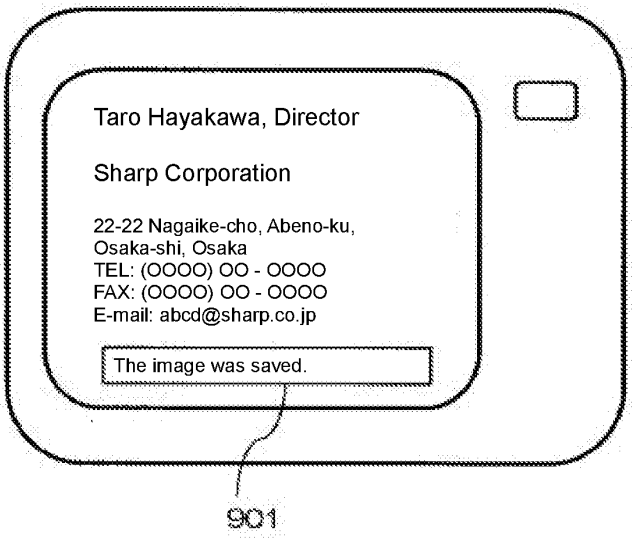

Figure 10

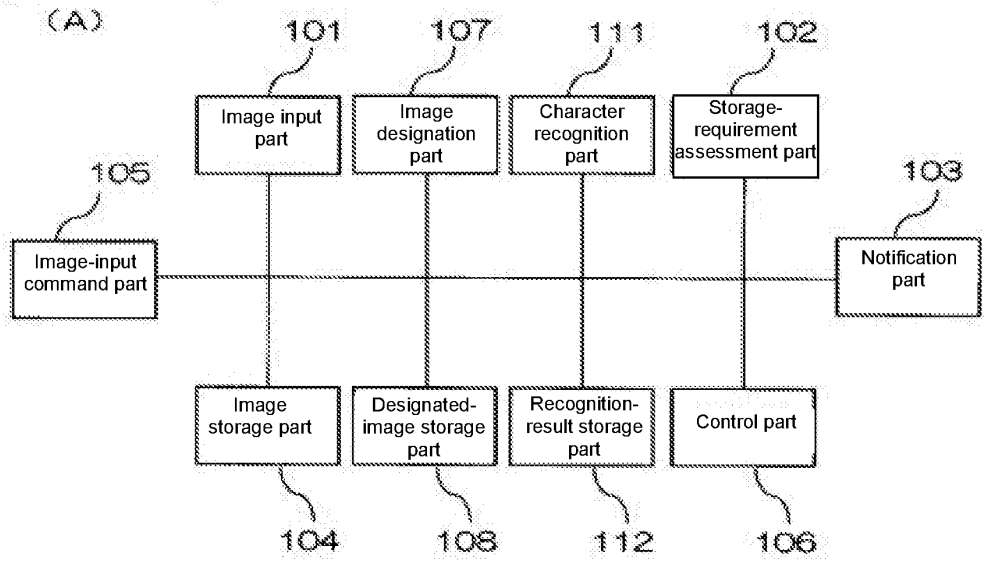
(A)
101
107
111
102
Image input part
Image designation part
Character recognition part
Storage-requirement assessment part
105
103
Image-input command part
Notification part
Image storage part
Designated-image storage part
Recognition-result storage part
Control part
104
108
112
106

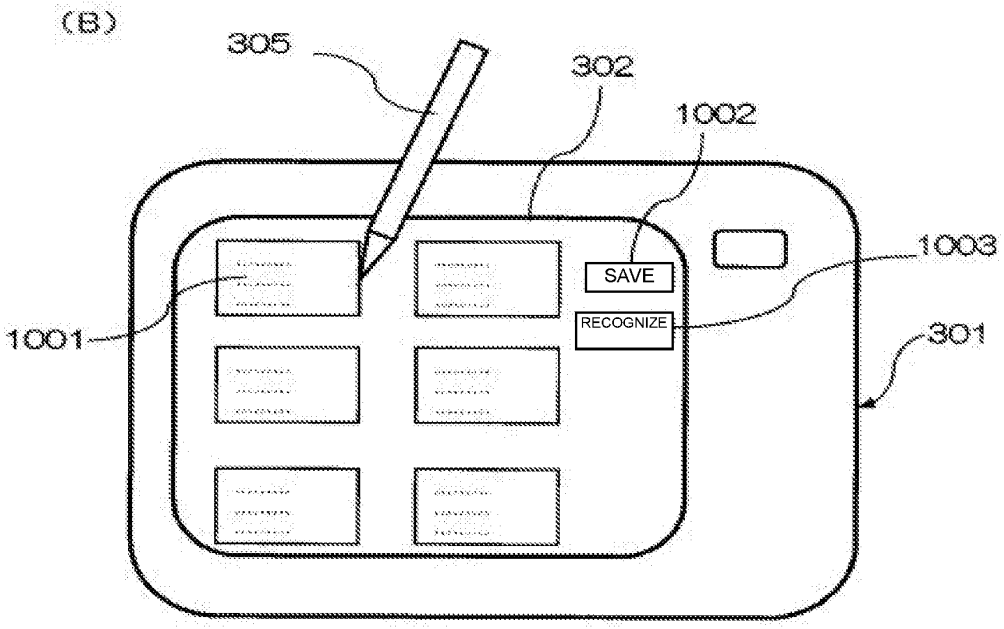
(B)
305
302
1002
1003
SAVE
RECOGNIZE
1001
301

Figure 11

(A)

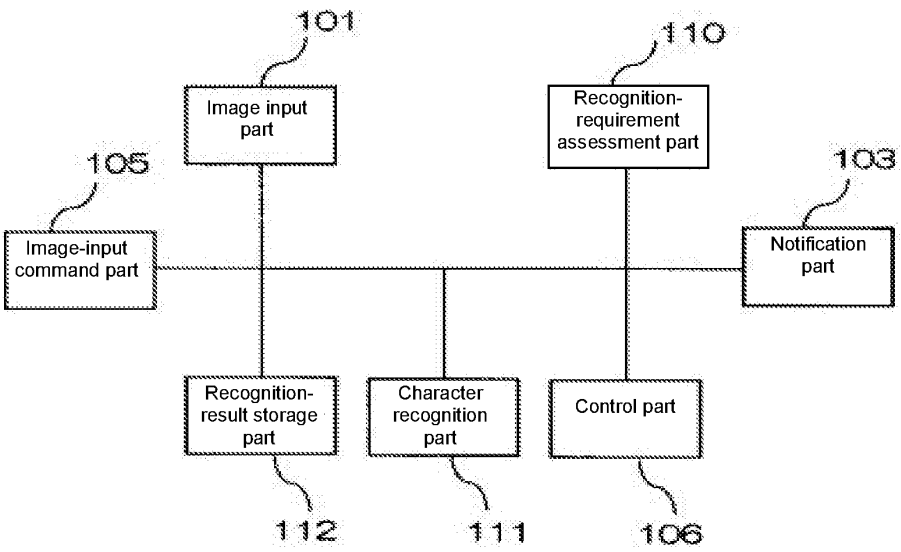
101
Image input part
110
Recognition-requirement assessment part
105
Image-input command part
103
Notification part
Recognition-result storage part
Character recognition part
Control part
112
111
106

(B)

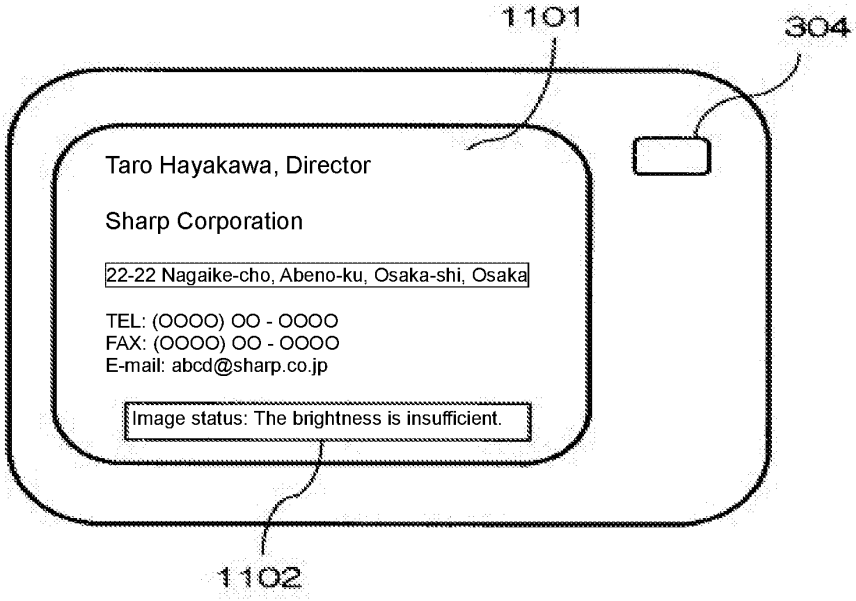
1101
304
Taro Hayakawa, Director
Sharp Corporation
22-22 Nagaike-cho, Abeno-ku, Osaka-shi, Osaka
TEL: (OOOO) OO - OOOO
FAX: (OOOO) OO - OOOO
E-mail: abcd@sharp.co.jp
Image status: The brightness is insufficient.
1102

Figure 12

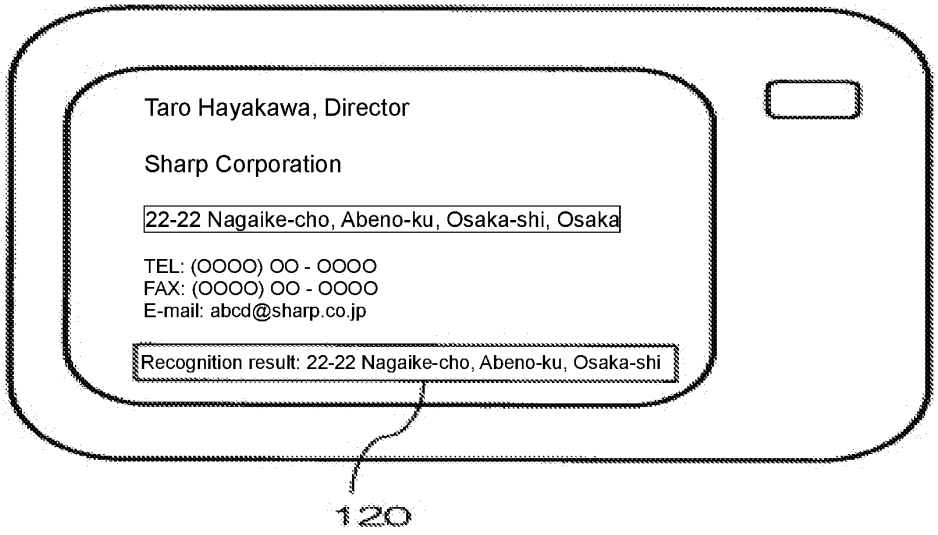
Taro Hayakawa, Director
Sharp Corporation
22-22 Nagaike-cho, Abeno-ku, Osaka-shi, Osaka
TEL: (OOOO) OO - OOOO
FAX: (OOOO) OO - OOOO
E-mail: abcd@sharp.co.jp
Recognition result: 22-22 Nagaike-cho, Abeno-ku, Osaka-shi
120

Figure 13

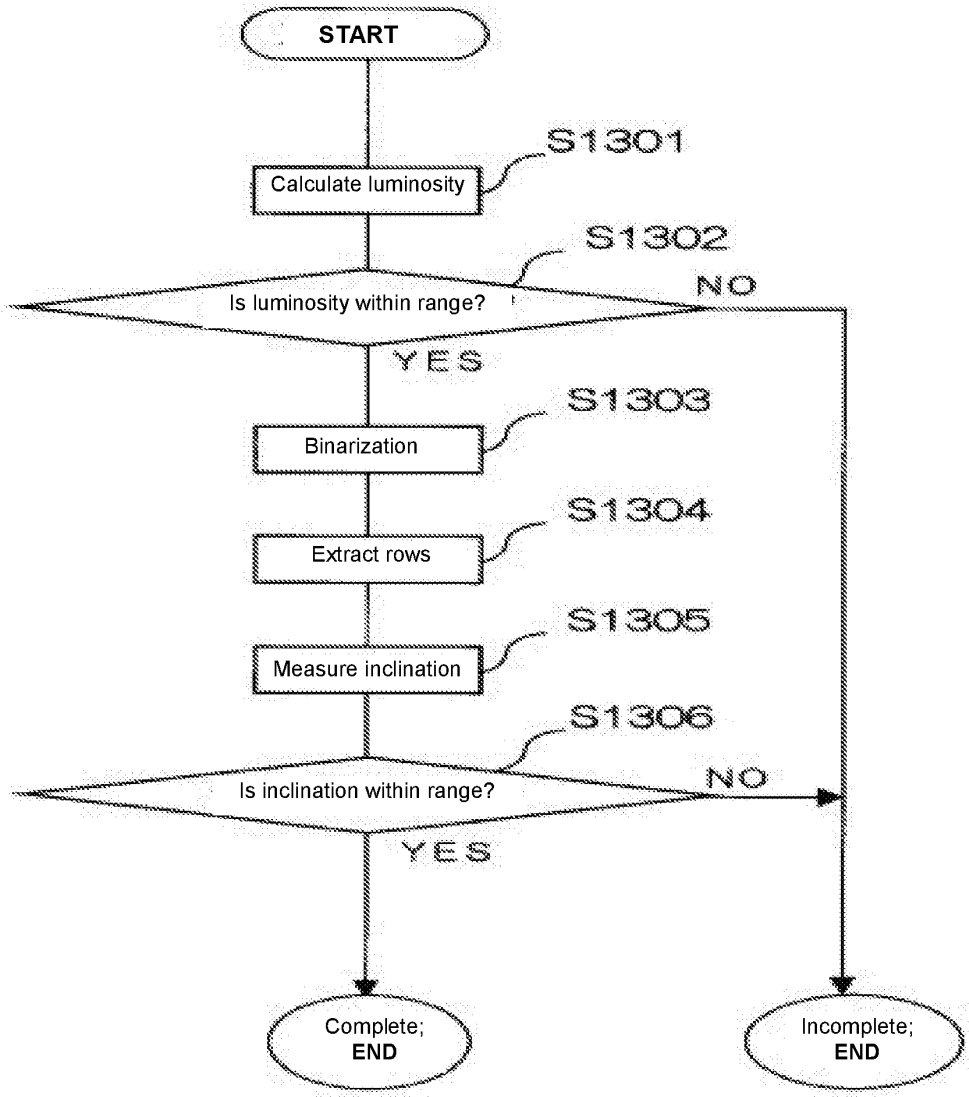
START
S1301
Calculate luminosity
S1302
Is luminosity within range?
NO
YES
S1303
Binarization
S1304
Extract rows
S1305
Measure inclination
S1306
Is inclination within range?
NO
YES
Complete;
END
Incomplete;
END

Figure 14

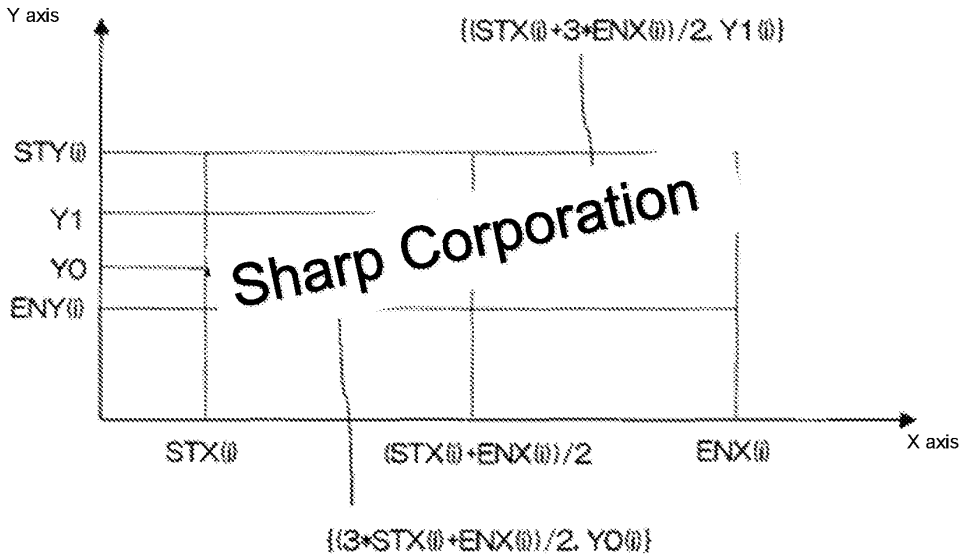

Sharp Corporation

Continuation from the front page . . .

(51) Int. Cl. [7]	FI		Theme Code (Reference)
H04N 5/93	H04N 5/91	L	
// H04N 101:00	H04N 5/93	Z	
	H04N 101:00		

F-term (reference): 5C053 FA08 FA27 GB21 JA16 KA24 LA01 LA06
5L096 BA17 CA02 DA03 FA14 FA67 JA11

Certificate of Translation

1. I, Yukie Hirose, hereby certify that I am a professional translator, am fluent in both Japanese and English, and am competent to translate from Japanese into English.

2. I hereby certify that I prepared the foregoing translation of the patent application JP2004023158A.

3. I acknowledge that willful false statements and the like are punishable by fine and/or imprisonment.

4. All statements made herein of my own knowledge are true and all statements made on information and belief are believed to be true.

5. I declare under penalty of perjury that all statements made herein of my own knowledge are true and all statements made on information and belief are believed to be true, and further that these statements were made with the knowledge that willful false statements and the like are punishable by fine or imprisonment, or both, under 18 U.S.C. § 1001.

Executed on: 3/9/2020

Signed:

Ms. Yukie Hirose

PatBase - Express 19 May 2020 ×

US2006132605A patbase number: 11869607

© PatBase

Title: IMAGE PROVIDING SERVICE SYSTEM

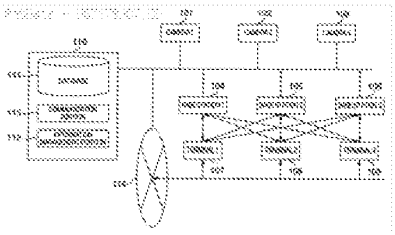

Abstract:
Source: US2006132605A To take a ceremonial photograph including a user himself/herself in a theme park or the like, the user must hand to a third person a camera to ask the photographing. There is a system which can take a picture of a user when the user is in a predetermined position, but the user cannot confirm the picture when the user is being photographed. For the purposes, an image service system includes plural cameras connected to a network, an administration server for accumulating or distributing images taken by the cameras, and a client terminal for displaying the images taken by the cameras. The position of the user and the positions of surrounding cameras located within a predetermined distance from the client terminal are detected automatically. Images including the user can be displayed on the terminal.

Owner(s) / Assignee(s): HITACHI LTD ; HOHMANN PETER ; HOSHINO TAKESHI ; PAOLANTONIO SERGIO ; WATANABE JUN ICHIRO

Inventor(s): WATANABE JUNICHIRO ; SERGIO PAOLANTONIO ; HOSHINO TAKASHI ; WALTER APRILE ; PETER WATANABE JUNICHIRO PAOLA ; HOHMANN PETER ; HOSHINO TAKESHI ; PAOLANTONIO SERGIO ; WATANABE JUN ICHIRO ; PETER HOHMANN ; TAKESHI HOSHINO ; JUN ICHIRO WATANABE ; WATANABE JUNICHIRO PAOLANTONIO SERGIO HOSHINO... ; WATANABE JUNICHIRO PAOLANTONIO SERGIO HOSHINO TAKESHI HOHMANN PETER ; WATANABE JUNICHIRO PAOLANTONIO SERGIO HOSHINO TAKE

Published in: (family)

Country	Publication number	Publication date	Application number	Application date	
U.S.A.	US2006132605 AA	Jun 22, 2006	US20050072307	Mar 7, 2005	PUBLISHED APPLICATION
U.S.A.	US7479987 BB	Jan 20, 2009	US20050072307	Mar 7, 2005	UNITED STATES PATENT
CHINA	CN1791214 A	Jun 21, 2006	CN200510054164	Mar 7, 2005	UNEXAMINED APPLIC. OPEN TO PUBLIC INSPECTION
UNITED KINGDOM	GB200504694 A0	Apr 13, 2005	GB20050004694	Mar 7, 2005	APPLICATION FOR PATENT
UNITED KINGDOM	GB2421391 A1	Jun 21, 2006	GB20050004694	Mar 7, 2005	APPLICATION PUBLISHED
UNITED KINGDOM	GB2421391 B2	Jul 7, 2010	GB20050004694	Mar 7, 2005	PATENT GRANTED
JAPAN	JP2006174195 A2	Jun 29, 2006	JP20040365260	Dec 17, 2004	APPLICATION

Priority:	JP20040365260 20041217
International class:	H04N1/00 H04N21/4223 H04N5/232 H04N7/173 H04N7/18 (Advanced/Invention); H04N5/232 H04N7/173 H04N7/18 (Core/Invention)
CPC:	H04N1/00137 H04N1/00148 H04N1/00164 H04N1/00172 H04N7/181 H04N1/00127
European class:	H04N1/00C2C H04N1/00C2E H04N1/00C2F2 H04N1/00C2H2 H04N7/18C
US class:	348/159 348/159P 348/207.1 348/207.99 348/211.2 348/211.3 348/211.8 348/E07.086 348/E7.086 348/E70.865 396/57
Cited documents:	US7265779 BB, US6583808 BB, US5495576 A, US2006125930 AA, US2006072757 AA, US2005151850 AA, US2005117033 AA, US2005088533 AA, US2004059499 AA, US2003189649 AA, US2003007785 AA, US2002135677 AA, US2002049728 AA, JP2004040736 A2, JP2002218426 A2, JP2002185837 A2, JP2002016902 A2, JP2001094860 A2, JP11215421,
Agent(s):	ANTONELLI TERRY STOUT AND KRAUS LLP

(19)日本国特許庁(JP)　(12)公開特許公報(A)　(11)特許出願公開番号
特開2006-174105
(P2006-174105A)
(43)公開日　平成18年6月29日(2006.6.29)

(51)Int.Cl.		F I		テーマコード（参考）
H04N 5/232	(2006.01)	H04N 5/232	Z	5C122
H04N 101/00	(2006.01)	H04N 101:00		

審査請求 未請求　請求項の数 9　ＯＬ　（全 16 頁）

(21)出願番号　特願2004-364022(P2004-364022)
(22)出願日　平成16年12月16日(2004.12.16)

(71)出願人　000001443
カシオ計算機株式会社
東京都渋谷区本町１丁目６番２号
(74)代理人　100090619
弁理士　長南　満輝男
(72)発明者　宮田　陽
東京都羽村市栄町３丁目２番１号
カシオ計算機株式会社羽村技術センター内

Ｆターム(参考)　5C122 DA04 EA41 FH12 FH13 GA23 HA78 HB01

(54)【発明の名称】電子カメラ及びプログラム

(57)【要約】　（修正有）
【課題】被写体のブレのない画像を撮影し得る電子カメラ及びプログラムを提供する。
【解決手段】デジタルカメラで、被写体３５を撮影しようとする場合に（ｂ）や（ｃ）に示すように手ブレや動体ブレによりスルー画像３６がブレるが、手ブレがある場合は矢印３７により警告表示がなされるので、撮影者はカメラを持ち直して手ブレを抑制する。撮影者が手ブレを抑制している間に（ｄ）に示すように被写体３５の動きが略停止すれば静止したスルー画像３８が表示されブレがなくなるので、ブレが所定の閾値以下の場合にオートシャッターにより自動的に撮影を行ってブレのない静止画像３９（ｅ）を撮影する。
【選択図】図３

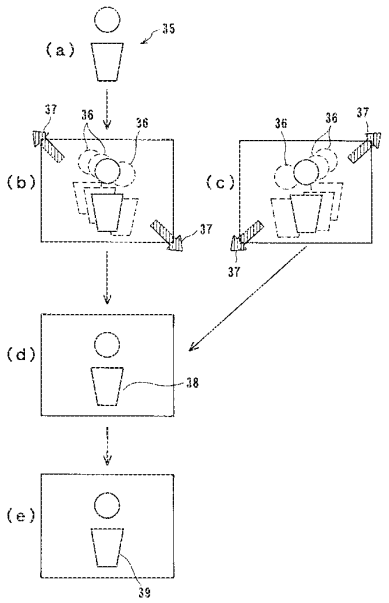

【特許請求の範囲】
【請求項１】
被写体を撮影して撮影画像を得る撮像手段と、
　前記撮像手段によって取り込まれる画像に基づき、画像のブレを検出するブレ検出手段と、
　前記ブレ検出手段によって検出される画像のブレが所定の閾値未満であるか否かを判断する第１の判断手段と、
　前記第１の判断手段により所定の閾値未満であると判断された場合に、撮影処理を実行する撮影制御手段と、
を備えたことを特徴とする電子カメラ。
【請求項２】
前記第１の判断手段は、
前記ブレ検出手段によって検出される画像のブレを所定の閾値と比較する比較手段を含み、この比較手段による比較結果に基づき、画像のブレが所定の閾値未満であるか否かを判断する、
ことを特徴とする請求項１記載の電子カメラ。
【請求項３】
前記ブレ検出手段は電子カメラ本体のブレを検出する第１のブレ検出手段と、画像のブレを検出する第２のブレ検出手段とからなり、
　前記比較手段は、前記第１のブレ検出手段によって検出される電子カメラ本体のブレを第１の閾値と比較する第１の比較手段と、前記第２のブレ検出手段によって検出される画像のブレを第２の閾値と比較する第２の比較手段とからなり、
　前記第２のブレ検出手段は、前記第１の比較手段による比較結果が第１の閾値未満のときに前記撮像手段によって取り込まれる画像の対象領域におけるブレを検出し、
　前記撮影制御手段は、前記第２の比較手段による比較結果が第２の閾値未満のときに撮影処理を実行する、
ことを特徴とする請求項１又は２記載の電子カメラ。
【請求項４】
更に、前記第１の判断手段により所定の閾値未満であると判断されたときからの経過時間を計測する経過時間計測手段を備え、
　前記撮影制御手段は、前記経過時間計測手段により所定の経過時間が計測されたとき撮影処理を実行する、ことを特徴とする請求項１乃至３の何れかに記載の電子カメラ。
【請求項５】
更に、前記撮像手段によって取り込まれる画像中の所定のエリア内に被写体像が収まっているか否かを判断する第２の判断手段を備え、
前記撮影制御手段は、
前記第１の判断手段により所定の閾値未満であると判断され、且つ前記第２の判断手段により所定のエリア内に被写体像が収まっていると判断された場合に、撮影処理を実行することを特徴とする請求項１乃至４の何れかに記載の電子カメラ。
【請求項６】
更に、前記撮像手段によって取り込まれる画像中の任意のエリアを指定するエリア指定手段を備え、
　前記第２の判断手段は、前記撮像手段によって取り込まれる画像中の、前記エリア指定手段により指定された任意のエリア内に被写体像が収まっているか否かを判断する、
ことを特徴とする請求項５記載の電子カメラ。
【請求項７】
更に、前記エリア指定手段によって指定されたエリアをそれ以外のエリアと画する枠線を表示する枠線表示手段を備えたことを特徴とする請求項５又は６記載の電子カメラ。
【請求項８】
更に、明るさに基づき、シャッタースピードを取得するシャッタースピード取得手段と、

前記シャッタースピード取得手段によって取得されたシャッタースピードに応じた閾値を取得する閾値取得手段とを備え、
　前記第１の判断手段は、前記ブレ検出手段によって検出される画像のブレが、前記閾値取得手段により取得された閾値未満であるか否かを判断すること、
を特徴とする請求項１乃至７のいずれかに記載の電子カメラ。
【請求項９】
電子カメラのコンピュータに、
　被写体を撮影して撮影画像を得る機能と、
　得られた撮影画像に基づき、画像のブレを検出する機能と、
　検出された画像のブレが所定の閾値未満であるか否かを判断する機能と、
　所定の閾値未満であると判断された場合に撮影処理を行う機能と、
を実行させるプログラム。
【発明の詳細な説明】
【技術分野】
【０００１】
　本発明は、デジタルカメラ等の電子カメラにおいてブレのない撮影画像を得る撮影技術に関する。
【背景技術】
【０００２】
カメラで撮影を行う場合はシャッターキー等を押して撮像指示を行って撮影するのが普通であり、三脚等のカメラ固定装置にカメラを固定せず、手で構えて撮影指示を行うとシャッターキーを押す際に手ブレが生じてブレた画像が撮影されてしまうといった問題があった。
　手ブレを抑制するための従来技術として、手ブレを検出して警告を発生して撮影者に、しっかりカメラを保持するようユーザを促すものがある。
【０００３】
　このようなカメラとして、加速度センサの出力が所定値より大きいことを判定する第１判定手段と、画像信号が所定量以上に変化した時を判定する第２判定手段とを設け、第１、第２の判定手段の判定結果に従って警告を行うカメラや（例えば、特許文献１参照）、シャッター操作時の撮影画像を保存すると共に、シャッター操作前後の画像を自動的に取得し、シャッター操作時の画像と比較して手ブレを検出したとき警告するように構成した電子スチルカメラがある（例えば、特許文献２参照）。
【０００４】
　また、デジタルカメラのような電子静止画システムを対象とした電子的手ブレ補正方式の手ブレ補正装置がある。
　このような装置として、手ブレ量を検出する手ブレ検出手段と、手ブレ検出手段で検出された手ブレ量が所定の範囲内にあるタイミングにのみ撮像素子を露光する露光制御手段を備えた電子静止画システムがある（例えば、特許文献３参照）。
【特許文献１】特開２００３－１４０２１９号公報
【特許文献２】特許第２８７０７７２号
【特許文献３】特開平１１－２６６３９２号
【発明の開示】
【発明が解決しようとする課題】
【０００５】
　上記特許文献１では所定量以上の被写体ブレが生ずるたびに警告表示するので、撮影者はそのたびにカメラを持ち直して安定させてシャッターを押して撮影することができるが、画像のブレは手ブレと被写体の動きによるブレ（以下、動体ブレ）があり、カメラを持ち直すことにより手ブレをなくすことができたとしても被写体のブレを抑制することはできないので、被写体が動いた場合に動体ブレのある画像が撮影されてしまうといった課題があった。

【０００６】
また、上記特許文献２に開示の技術ではシャッター操作時に手ブレが生じた場合そのブレを検出して警告するので、その場で撮り直しができるという利点があるが、未然に手ブレを防止することができないし、上記特許文献１の場合と同様、被写体が動いた場合に動体ブレのある画像が撮影されてしまうといった課題があった。
【０００７】
また、上記特許文献３に開示の技術によれば、手ブレ検出手段で検出された手ブレ量を表す手ブレ信号が或る範囲内にあるタイミングにのみ露光を行うようにすれば、被写体位置の安定した画面のみが得られるようになるので、手ブレを抑制した静止画を撮影することができるが、上記特許文献１及び特許文献２と同様、被写体が動いた場合に動体ブレのある画像が撮影されてしまうといった課題があった。
【０００８】
本発明は上記従来技術の課題を解決するためになされたものであり、被写体のブレのない画像を撮影し得る電子カメラ及びプログラムの提供を目的とする。
【課題を解決するための手段】
【０００９】
上記課題を解決するために、請求項１に記載の発明は、被写体を撮影して撮影画像を得る撮像手段と、撮像手段によって取り込まれる画像に基づき、画像のブレを検出するブレ検出手段と、ブレ検出手段によって検出される画像のブレが所定の閾値未満であるか否かを判断する第１の判断手段と、第１の判断手段により所定の閾値未満であると判断された場合に、撮影処理を実行する撮影制御手段と、を備えたことを特徴とする電子カメラを提供する。　これにより、画像のブレが所定の閾値未満の場合にシャッター操作なしで撮影処理を行うので、シャッター操作時に生じやすいシャッターキーの押し下げ等によるブレや撮影者が被写体の静止を認識してからシャッターキーを押すまでのわずかな時間の間に起きる被写体の動きによるブレも生じない。そして、被写体が確実に静止した瞬間を確実に捉えて撮影することができる。
【００１０】
また、請求項２に記載の発明では、第１の判断手段は、ブレ検出手段によって検出される画像のブレを所定の閾値と比較する比較手段を含み、この比較手段による比較結果に基づき、画像のブレが所定の閾値未満であるか否かを判断する、ことを特徴とする請求項１記載の電子カメラを提供する。
これにより、被写体が静止しても他の環境条件からの影響による振動や被写体自身のわずかな揺れ等により僅かな動きは生ずるので被写体の完全な静止を待っていてはシャッターチャンスを逃す可能性があるが、閾値を設けたことにより上述したような僅かなブレを切り捨て静止状態とみなすことができるので、シャッターチャンスを失うことなくオートシャッター撮影を行うことができる。
【００１１】
また、請求項３に記載の発明では、ブレ検出手段は電子カメラ本体のブレを検出する第１のブレ検出手段と、画像のブレを検出する第２のブレ検出手段とからなり、比較手段は、前記第１のブレ検出手段によって検出される電子カメラ本体のブレを第１の閾値と比較する第１の比較手段と、前記第２のブレ検出手段によって検出される画像のブレを第２の閾値と比較する第２の比較手段とからなり、第２のブレ検出手段は、前記第１の比較手段による比較結果が第１の閾値未満のときに前記撮像手段によって取り込まれる画像の対象領域におけるブレを検出し、撮影制御手段は、前記第２の比較手段による比較結果が第２の閾値未満のときに撮影処理を実行する、ことを特徴とする請求項１又は２記載の電子カメラを提供する。
これにより、電子カメラは手ブレが略なくなってから画像のブレを検出するので、被写体が略静止した状態でシャッター操作なしで（つまり、オートシャッターで）画像を撮影することができる。また、シャッター操作時に生じやすいシャッターキーの押し下げ等によるブレや撮影者が被写体の静止を認識してからシャッターキーを押すまでのわずかな時

間の間に起きる被写体の動きによるブレも生じない。つまり、撮影者にとっては手ブレを生じないようにしてカメラを構えているだけで被写体ブレのない画像を撮影できる。

【００１２】

また、請求項４に記載の発明では　更に、前記第１の判断手段により所定の閾値未満であると判断されたときからの経過時間を計測する経過時間計測手段を備え、撮影制御手段は、前記経過時間計測手段により所定の経過時間が計測されたとき撮影処理を実行する、ことを特徴とする請求項１乃至３の何れかに記載の電子カメラを提供する。

これにより、電子カメラがブレなしと判定してからオートシャッターによる撮影処理を実行するまでの間に時間があるので撮影者はその間に画像の構図を確認できる。

【００１３】

また、請求項５に記載の発明では、更に、前記撮像手段によって取り込まれる画像中の所定のエリア内に被写体像が収まっているか否かを判断する第２の判断手段を備え、撮影制御手段は、第１の判断手段により所定の閾値未満であると判断され、且つ前記第２の判断手段により所定のエリア内に被写体像が収まっていると判断された場合に、撮影処理を実行することを特徴とする請求項１乃至４の何れかに記載の電子カメラを提供する。

これにより、撮像画像の所定のエリアに被写体像が収まった状態の画像を得ることができる。

【００１４】

また、請求項６に記載の発明では、更に、前記撮像手段によって取り込まれる画像中の任意のエリアを指定するエリア指定手段を備え、第２の判断手段は、前記撮像手段によって取り込まれる画像中の、前記エリア指定手段により指定された任意のエリア内に被写体像が収まっているか否かを判断する、ことを特徴とする請求項５記載の電子カメラを提供する。

これにより、撮像画像中においてユーザが所望するエリアに被写体像が収まった状態の画像を得ることができる。

【００１５】

また、請求項７に記載の発明では、更に、エリア指定手段によって指定されたエリアをそれ以外のエリアと画する枠線を表示する枠線表示手段を備えたことを特徴とする請求項５又は６記載の電子カメラを提供する。

これにより、エリアが枠線でそれ以外の部分と画されるので、撮影者にとって被写体が確実にエリア枠内に入るようにカメラを移動させ易い。

【００１６】

また、請求項８に記載の発明では、更に、明るさに基づき、シャッタースピードを取得するシャッタースピード取得手段と、シャッタースピード取得手段によって取得されたシャッタースピードに応じた閾値を前記第１の閾値として取得する閾値取得手段とを備え、第１の判断手段は、前記ブレ検出手段によって検出される画像のブレが、前記閾値取得手段により取得された第１の閾値未満であるか否かを判断すること、を特徴とする請求項１乃至７のいずれかに記載の電子カメラを提供する。

これにより、手ブレの有無を判定するための閾値が自動変更可能になるので、可能な範囲でシャッターチャンスを生かした撮影ができるようにしながらも、手ブレの危険度が増すような状況では手ブレ防止を優先させるような自動制御ができる。

【００１７】

また、請求項９に記載の発明では、電子カメラのコンピュータに、被写体を撮影して撮影画像を得る機能と、得られた撮影画像に基づき、画像のブレを検出する機能と、検出された画像のブレが所定の閾値未満であるか否かを判断する機能と、所定の閾値未満であると判断された場合に撮影処理を行う機能と、を実行させるプログラムを提供する。

これにより、電子カメラはブレが所定の閾値未満の場合にシャッター操作による撮像指示なしで自動的に撮影処理を行うことができる。

【発明の効果】

【００１８】

本発明によれば、電子カメラはブレが所定の閾値未満の場合にシャッター操作なしで撮影処理を行うので、シャッター操作時に生じやすいシャッターキーの押し下げ等によるブレや撮影者が被写体の静止を認識してからシャッターキーを押すまでのわずかな時間の間に起きる被写体の動きによるブレも生じない。被写体が確実に静止した瞬間を確実に捉えて撮影することができる。また、撮影者にとっては手ブレを生じないようにカメラを構えているだけで被写体ブレのない画像を撮影できる。

【発明を実施するための最良の形態】

【００１９】

図１は本発明に係る電子カメラの一例としてのデジタルカメラの一実施例の外観を示す図であり、図１（ａ）は正面図、図１（ｂ）は背面図、図１（ｃ）は上面図である。

図１で、デジタルカメラ１は図１（ａ）に示すように正面側に撮像レンズ２を有している。また、デジタルカメラ１の背面には図１（ｂ）に示すように、モードダイアル３、液晶モニタ画面４、カーソルキー５、ＳＥＴキー６等が設けられている。また、上面には図１（ｃ）に示すようにズームレバー７、シャッターキー８及び電源ボタン９が設けられ、図示されていないが側部にはパーソナルコンピュータ（以下、パソコン）やモデム等の外部装置とＵＳＢケーブルに接続する場合に用いるＵＳＢ端子接続部が設けられている。

【００２０】

図２は、図１に示したデジタルカメラの電子回路構成の一実施例を示す図である。図２で、デジタルカメラ１は、基本モードである撮影モードにおいて合焦位置や絞り位置を移動させるモータ１１、撮像レンズ２を構成するレンズ光学系１２、撮像素子であるＣＣＤ１３、タイミング発生器（ＴＧ）１４、垂直ドライバ１５、サンプルホールド回路（Ｓ／Ｈ）１６、Ａ／Ｄ変換器１７、カラープロセス回路１８、ＤＭＡ（Direct Memory Access）コントローラ１９、ＤＲＡＭインターフェイス（Ｉ／Ｆ）２０、ＤＲＡＭ２１、制御部２２、ＶＲＡＭコントローラ２３、ＶＲＡＭ２４、デジタルビデオエンコーダ２５、表示部２６、ＪＰＥＧ回路２７、保存メモリ２８、キー入力部３０、ブレ検出部３１を備えている。なお、モータ１１～カラープロセス回路１８は本発明において撮像部に相当する。また、手ブレ検出部３２は必須ではない。

【００２１】

撮影モードでのモニタリング状態においては、モータ（Ｍ）１１の駆動により合焦位置や絞り位置が移動され、上記撮影レンズ２を構成する光学系１２の撮影光軸後方に配置された撮像素子であるＣＣＤ１３が、タイミング発生器（ＴＧ）１４、垂直ドライバ１５によって走査駆動され、一定周期毎に結像した光像に対応する光電変換出力を１画面分出力する。

ＣＣＤ１３は被写体の二次元画像を撮像する固体撮像デバイスであり、典型的には毎秒数十フレームの画像を撮像する。なお、撮像素子はＣＣＤに限定されずＣＭＯＳ（Complementary Metal Oxide Semiconductor）などの固体撮像デバイスでもよい。

【００２２】

この光電変換出力は、アナログ値の信号の状態でＲＧＢの各原色成分毎に適宜ゲイン調整された後に、サンプルホールド回路（Ｓ／Ｈ）１６でサンプルホールドされ、Ａ／Ｄ変換器１７でデジタルデータに変換され、カラープロセス回路１８で画像補間処理及びγ補正処理を含むカラープロセス処理が行われて、デジタル値の輝度信号Ｙ及び色差信号Ｃｂ、Ｃｒが生成され、通常撮影モードではＤＭＡ（Direct Memory Access）コントローラ１９に出力される。

【００２３】

ＤＭＡコントローラ１９は、通常撮影モードではカラープロセス回路１８の出力する輝度信号Ｙ及び色差信号Ｃｂ、Ｃｒを、同じくカラープロセス回路１８からの複合（composite）同期信号、メモリ書き込みイネーブル信号、及びクロック信号を用いてＤＲＡＭインターフェイス（Ｉ／Ｆ）２０を介してバッファメモリとして使用されるＤＲＡＭ２１にＤＭＡ転送する。

【００２４】

制御部２２は、このデジタルカメラ１全体の制御動作を司るものであり、ＣＰＵ若しくはＭＰＵ（以下、ＣＰＵ）と、後述するように撮影モード時のオートシャッター処理を含む該ＣＰＵで実行される動作プログラムを固定的に記憶したフラッシュメモリ等のプログラム格納メモリ、及びワークメモリとして使用されるＲＡＭ等により構成され、上記輝度及び色差信号のＤＲＡＭ２１へのＤＭＡ転送終了後に、この輝度及び色差信号をＤＲＡＭインターフェイス２０を介してＤＲＡＭ２１から読出し、ＶＲＡＭコントローラ２３を介してＶＲＡＭ２４に書込む。

【００２５】

制御部２２は、また、キー入力部３０からの状態信号に対応してフラッシュメモリ等のプログラム格納用メモリに格納されている各モードに対応の処理プログラムやメニューデータを取り出して、デジタルカメラ１の他の各機能の実行制御、例えば、撮像や記録画像の再生機能の実行等を行なう他、機能選択時の機能選択メニューの表示制御等を行う。

【００２６】

デジタルビデオエンコーダ２５は、上記輝度及び色差信号をＶＲＡＭコントローラ２３を介してＶＲＡＭ２４から定期的に読み出し、これらのデータを基にビデオ信号を生成して上記表示部２６に出力する。

【００２７】

表示部２６は、上述したように撮影モード時にはモニタ表示部（電子ファインダ）として機能するもので、デジタルビデオエンコーダ２５からのビデオ信号に基づいた表示を行うことで、その時点でＶＲＡＭコントローラ２３から取込んでいる画像情報に基づく画像をリアルタイムに液晶モニタ画面４に表示することになる。

【００２８】

制御部２２は手ブレ量が所定の閾値未満の場合にモータ１１に駆動制御信号を送ってレンズ光学系１２の撮像レンズを移動させて合焦（ＡＦ）動作を行わせ（図４のステップＳ３、Ｓ４参照）、画像のブレが所定の閾値未満の場合にオートシャッター撮影を行う（つまり、その時点でＣＣＤ１３から取込んでいる１画面分の輝度及び色差信号のＤＲＡＭ２１へのＤＭＡ転送の終了後、直ちにＣＣＤ１３からのＤＲＡＭ２１への経路を停止し、記録保存の状態に遷移する（図４のステップＳ８、Ｓ９参照））。

【００２９】

この保存記録の状態では、制御部２２がＤＲＡＭ２１に書込まれている１フレーム分の輝度及び色差信号をＤＲＡＭインターフェイス２０を介してＹ、Ｃｂ、Ｃｒの各コンポーネント毎に縦８画素×横８画素の基本ブロックと呼称される単位で読み出してＪＰＥＧ（Joint Photograph cording Experts Group）回路２７に書込み、このＪＰＥＧ回路２７でＡＤＣＴ（Adaptive Discrete Cosine Transform：適応離散コサイン変換）、エントロピ符号化方式であるハフマン符号化等の処理によりデータ圧縮する。

そして得た符号データをＪＰＥＧ回路２７から読出し、１画像のデータファイルとしてデジタルカメラ１の記録媒体である保存メモリ２８に記録し、１フレーム分の輝度及び色差信号の圧縮処理及び保存メモリ２８への圧縮データの書込み終了に伴って、制御部２２はＣＣＤ１３からＤＲＡＭ２１への経路を再び起動する。

【００３０】

また、基本モードである再生モード時には、制御部２２が保存メモリ２８に記録されている画像データを選択的に読出し、ＪＰＥＧ回路２７で画像撮影モード時にデータ圧縮した手順とまったく逆の手順で圧縮されている画像データを伸張し、伸張した画像データをＶＲＡＭコントローラ２３を介してＶＲＡＭ２４に展開して記憶させた上で、このＶＲＡＭ２４から定期的に読出し、これらの画像データを元にビデオ信号を生成して表示部２６の液晶モニタ画面４に再生画像を出力（＝表示）させる。

【００３１】

キー入力部３０は、上述したモードダイアル３、カーソルキー、ＳＥＴキー、ズームレバー７、シャッターキー８、電源ボタン９等から構成され、それらのキー操作に伴う信号は直接制御部２２に送出される。

【００３２】
モードダイアル３は各種モードを選択する際に操作するダイヤルキーである。なお、モードの選択をメニュー選択により行うようにしてもよい。
カーソルキー５は液晶モニタ画面４に表示されたメニューやアイコン等をカーソルでポイント（指定）する際に操作するキーであり、カーソルキー５の操作によりカーソルを上下又は左右に移動させることができる。
また、ＳＥＴキー６はカーソルキー５による操作結果を確認する際に押すキーである。例えば、後述する図６のオートシャッター設定画面６０においてカーソルキー５及びセットキー６の操作により撮影者は被写体が枠内で静止するとオートシャッターによりシャッター操作なしで撮影を行うことのできるオートシャッターエリアを設定することができる。

【００３３】
ズームレバー７は、ズーム操作に用いられ、デジタルズームの場合はズームレバー７の操作に対応してズーム値が決定されるが、実際の画角は変化せず、液晶モニタ画面４にはズーム値に応じたサイズの画像がトリミングされて表示される。また、光学ズームの場合はズームレバー７の操作に対応してズームレンズ（可変焦点距離レンズ）がワイド側又はテレ側に移動され、ズームレバー７の操作に対応してズーム値が決定され、ズーム値の変化に追従して画角が実際に変化し、液晶モニタ画面には広角画像又はテレ画像が表示される。

【００３４】
ブレ検出部３１は、スルー画像表示時にＤＲＡＭ２１に取込まれる画像、つまり、カラープロセス回路１８からの出力画像データから被写体ブレ（手ブレ及び動体ブレからなるブレ）の有無を検出して検出値を制御部２２に出力する。
例えば、ＤＲＡＭ２１に直前に取込まれた画像Ｇzと今回取込まれた画像Ｇkの比較対象領域における動きベクトル（画像中の各要素がどの方向にどのくらい動いているかという情報）を取得してその差分ΔＧ（又は差分に応じた数値を表すデジタル信号）を制御部２２に出力する機能を実現するワンチップのマイクロコンピュータとして構成するようにしてもよいし、ブレ検出部３１の代わりに、ＤＲＡＭ２１に取り込んだ前後の画像の比較対象域における動きベクトルを取得して被写体ブレ量を算出する機能を実現するプログラムをプログラム格納メモリに格納しておくようにしてもよい。なお、動きベクトルの取得方法は公知の方法を用いることができる。

【００３５】
手ブレ検出部３２としては公知の小型の振動検出装置を用いればよく、撮影時のデジタルカメラ１のブレを検出してデジタル信号に変換した手ブレ検出信号を制御部２２に送出する。振動検出装置としては、例えば、角速度センサ（縦方向の手ブレを検出するものと横方向の手ブレを検出するもの）や圧電素子を用いた振動ジャイロを用いることができる。

【００３６】
なお、単にブレ検出部３１でＣＣＤ画像からブレを検出すると手ブレと動体ブレ（＝被写体ブレ）の両方が検出されてしまうので上述したように別個に手ブレ検出センサ３２を設け、このセンサによる検出結果をブレ検出部３１によるＣＣＤ画像からのブレ検出結果から差し引くことにより被写体ブレのみの検出が可能となる。

【００３７】
図３はオートシャッター機能の説明図であり、図３で符号３５は被写体、符号３６はブレているスルー画像、符号３７は手ブレの方向を示す矢印、符号３８は静止したスルー画像、符号３９はブレなしとして撮影された静止画像を示す。
デジタルカメラ１で図３（ａ）に示すような被写体３５を撮影しようとする場合、図３（ｂ）や図３（ｃ）に示すように手ブレや動体ブレによりスルー画像３６がブレるが、手ブレがある場合は矢印３７により警告表示がなされるので、撮影者はカメラを持ち直して手ブレを抑制する。撮影者が手ブレを抑制している間に図３（ｄ）に示すように被写体３

５の動きが略停止すれば静止したスルー画像３８が表示されブレがなくなるので、ブレが所定の閾値以下の場合にオートシャッターにより自動的に撮影を行ってブレのない静止画像３９を撮影する（図３（ｅ））。

【００３８】

図４はオートシャッターモードにおけるデジタルカメラ１の動作概要を示すフローチャートであり、このフローチャートはデジタルカメラ１に本願発明のオートシャッターの各機能を実現させるためのプログラムを説明するためのものである。

以下に示す処理は基本的に制御部２２が予めフラッシュメモリ等のプログラムメモリに記憶されたプログラムに従って実行する例で説明するが、全ての機能をプログラムメモリに格納する必要はなく、必要に応じて、その一部若しくは全部をネットワークを介して受信して実現するようにしてもよい。以下、図１～図４に基いて説明する。

【００３９】

オートシャッターモードにおいて、制御部２２はその時点のズーム値に対応した焦点距離でＡＥ処理を実行し、ＣＣＤ１３から画像データを得ると共に自動ホワイトバランス（ＡＷＢ）処理により光源の色に対応したホワイトバランスになるようにカラープロセス回路１８で調整を施した上でＤＭＡコントローラ１９及びＤＲＡＭインターフェイス（Ｉ／Ｆ）２０を介してＤＲＡＭ２１にＤＭＡ転送すると共に、ＶＲＡＭ２４をＣＣＤ１３からの画像データを間引いたビデオスルー画像データで書き換えて表示部２６の液晶モニタ画面４にスルー画像を表示する（ステップＳ１）。

【００４０】

手ブレ検出部３２は、デジタルカメラ１のブレを検出して検出信号（デジタル信号）を所定時間間隔で制御部２２に送出するので、制御部２２は手ブレ検出部３２から手ブレ検出信号を受け取ると、受け取った検出信号を基に手ブレ量を取得して（ステップＳ２）、手ブレ量と所定の閾値とを比較して手ブレ量が閾値以上の場合にはステップＳ４に進み、手ブレ量が閾値未満の場合にはステップＳ５に進む（ステップＳ３）。

【００４１】

手ブレ量が閾値以上の場合には手ブレ量に比例した大きさのマークを生成してＶＲＡＭコントローラ２３を介してデジタルビデオエンコーダ２５に与えビデオ信号を生成させて表示部２６に出力させ、液晶モニタ画面４に表示させて手ブレが生じていることを撮影者に知らせてステップＳ１に戻る。これにより、撮影者にカメラを手ブレが生じないように保持し直すようにさせる。なお、手ブレ検出部３２が手ブレ量の他に手ブレ方向を検出する装置からなるようにした場合は、図３に示したようなブレ量と方向を示す矢印３７を表示することができる（ステップＳ４）。

【００４２】

手ブレ量が閾値未満のとき、制御部２２は所定のフォーカスエリアにピントが合うように合焦（ＡＦ）処理を行い（ステップＳ５）、合焦処理が終わるまでステップＳ１に戻って上記ステップＳ１～Ｓ５の動作を繰り返し、合焦処理が終わると合焦位置をロックしてステップＳ７に進む（ステップＳ６）。

【００４３】

ブレ検出部３１は、ＤＲＡＭ２１に直前に取込まれた画像Ｇzと今回取込まれた画像Ｇkの比較対象領域における動きベクトルを取得し、差分ΔＧ（又は差分に応じた数値を表すデジタル信号）を制御部２２に出力するので、制御部２２は受け取った動きベクトルの差分を取得し（ステップＳ７）、ブレ検出部３１から受け取った動きベクトルの差分Δが所定の閾値δ以上か否かを調べ、動きベクトルの差分Δが所定の閾値δ未満の場合はブレ（手ブレ、動体ブレ）なしとしてステップＳ９に進み、差分Δが所定の閾値δ以上の場合はブレありとしてステップＳ７に戻る。なお、図示していないがステップＳ７とこの判断ステップを繰り返している間にもスルー画像は表示される（ステップＳ８）。

【００４４】

ブレなしとされた場合は、その時点で撮影処理（つまり、ＣＣＤ１３から取込んでいる１画面分の画像データのＤＲＡＭ２１へのＤＭＡ転送の終了後、直ちにＣＣＤ１３からの

ＤＲＡＭ２１への経路を停止するか、あるいはスルー画像取得時とは異なる本撮影時のＣＣＤ駆動方式への切替）を実行してシャッター擬似音を出力すると共に（ステップＳ９）、取込んだ画像データをＶＲＡＭコントローラ２３を介してＶＲＡＭ２４の内容を書き換えて表示部２６の液晶モニタ画面４に静止画像を表示する（ステップＳ１０）。

【００４５】

また、上記静止画像表示と並行して上記ステップＳ９でＤＲＡＭ２１に記憶した画像データに画像圧縮処理を施した後、この圧縮画像データ（画像ファイル）を保存メモリ２８に記録する（ステップＳ１１）。

【００４６】

上記図４のフローチャートに示す動作により、デジタルカメラ１は手ブレや被写体の動きによるブレのない画像をシャッター操作なしで（つまり、オートシャッターで）撮影することができるので、シャッター操作時に生じやすいシャッターキー８の押し下げ等によるブレや撮影者が被写体の静止を認識してからシャッターキー８を押すまでのわずかな時間の間に起きる被写体の動きによるブレも生じない。

また、撮影者にとっては手ブレを生じないようにカメラを構えているだけで被写体ブレのない画像を撮影できる。更に、手ブレの有無や大きさ等をマークで示すので手ブレの有無を認識しやすい。

【００４７】

なお、上記図４のフローチャートでは「手ブレ量の取得～手ブレ量のマーク表示」動作をステップＳ３～Ｓ５で行うようにしたが、「手ブレ量の取得～手ブレ量のマーク表示」動作をステップＳ５とステップＳ６の自動合焦処理中に行うようにしてもよく、ステップＳ６とステップＳ７の間で行うようにしてもよい。また、「手ブレ量の取得～手ブレ量のマーク表示」動作は必須ではない。また、「マーク表示」に変えて警告音等を出力するようにしてもよい。

【００４８】

＜変形例１＞

上記図４のフローチャートでは、ステップＳ８でブレ量が所定の閾値未満の場合に直ちにオートシャッターによる撮影処理を行うようにしたが、撮影者に構図等の確認の余裕を与えるためしばらく（例えば、２秒ほど）してからオートシャッターによる撮影処理を行うようにしてもよい。

【００４９】

図５は図４のフローチャートの変形例を示す図であり、図４のフローチャートのステップＳ９とＳ１０を図示のように置き換えてブレなしとなった場合の構図確認を容易とした例である。

【００５０】

図４のフローチャートのステップＳ８で、動きベクトルの差分Δが所定の閾値δ未満の場合に、制御部２２は、ＲＡＭの所定アリアに確保した撮影待ち時間カウンタＴの値を０に設定してから、撮影時間待ちカウンタのカウントを開始すると共に（ステップＳ９－１）、液晶モニタ画面４にスルー画像を表示する（ステップＳ９－２）。

【００５１】

制御部２２はブレ検出部３１から動きベクトルの差分Δを取得し（ステップＳ９－３）、ベクトルの差分Δが所定の閾値δ以上か否かを調べ、動きベクトルの差分Δが所定の閾値δ未満の場合はブレ（手ブレ、動体ブレ）なしとしてステップＳ１０－１に進み、差分Δが所定の閾値δ以上の場合はブレありとして合焦位置のロックを解除してステップＳ１に戻る（ステップＳ９－４）。

【００５２】

制御部２２は撮影待ち時間カウンタＴの値を調べ、撮影待ち時間カウンタＴの値が所定時間（この例では２秒）になるとステップＳ１０－２に進み、所定値未満の場合はステップＳ９－２に戻る（ステップＳ１０－１）。

【００５３】

制御部２２は、その時点で撮影処理（つまり、ＣＣＤ１３から取込んでいる１画面分の画像データのＤＲＡＭ２１へのＤＭＡ転送の終了後、直ちにＣＣＤ１３からのＤＲＡＭ２１への経路を停止するか、あるいはスルー画像取得時とは異なる本撮影時のＣＣＤ駆動方式への切替）を実行してシャッター擬似音を出力して図４のフローチャートのステップＳ１１に進む（Ｓ１０－２）。

【００５４】

上記図５に示した変形例の動作により、電子カメラがブレなしと判定してからオートシャッター撮影までに少し間があるので、撮影者は表示されているスルー画像によりオートシャッターによる撮影処理の間に画像の構図を確認できる。また、撮影待ち時間中に再びブレの有無を判定しているので、撮影待ち時間の間にカメラや被写体が動いた場合には時間のカウントはキャンセルされオートシャッターによる撮影を行うことなくスルー画像表示に戻るので、ブレた画像が撮影されることはない。また、静止画表示された画像の構図等が不満足の場合にカメラを動かせばその画像はオートシャッターによる撮影を行うことなくキャンセルされスルー画像表示に戻るので、撮影者の所望の構図のブレのない画像を撮影できる。

【００５５】

＜変形例２＞

動いている被写体の撮影を行う場合に被写体がカメラ視野内の特定のエリア（例えば、中央付近）で静止したときに撮影したい場合がある。

本実施例では撮影者が設定したエリア内に被写体が静止したときにデジタルカメラ１が自動的に撮影処理（オートシャッター）を行う例について図１～図４、図６、図７に基づいて説明する。

【００５６】

図６はオートシャッターエリア設定の説明図であり、符号６１はカーソルの始点であり、ＳＥＴキー６の操作により確定され色（例えば青色）表示される（図６（ａ））。符号６２はカーソルキー５の操作により移動中のカーソルであり（図６（ｂ））、符号６３はＳＥＴキー６の操作により確定された終点であり、始点とは異なる色（例えば緑）で表示される。また、符号６４はカーソルの始点６１と終点６３を結ぶ線分を対角線とする矩形枠（以下、オートシャッタエリア枠）であり、矩形枠内を示す符号６５は被写体が静止したときにオートシャッター撮影がされるエリア（以下、オートシャッターエリア）である（図６（ｃ））。

【００５７】

後述する図８のステップＳ０で上述したようにカーソルキー５及びＳＥＴキー６の操作により始点６１と終点６３を指定するとオートシャッターエリア枠６４に囲まれたオートシャッターエリア６５が設定され、画面上にオートシャッターエリア枠６４が表示される。

【００５８】

図７はオートシャッターエリア６５におけるオートシャッター撮影の説明図であり、符号７１は移動中の被写体であり符号７２はオートシャッターエリア６５で静止したブレのない被写体を示し、符号７３はオートシャッターにより撮影された被写体画像を示す。

【００５９】

図７（ａ）は移動中の被写体画像７１がスルー表示されているがオートシャッターエリア枠６４とは離れている状態を示し、図７（ｂ）は被写体７１がオートシャッターエリア枠６４に差し掛かった状態、若しくは撮影者が被写体７１をオートシャッターエリア枠６４内に収めようとカメラを動かした状態を示し、図７（ｃ）はオートシャッターエリア６５内で静止した被写体７２を示し、図７（ｄ）は被写体７５がブレていないことが確認され、オートシャッター撮影された被写体の静止画像７３を示す。

【００６０】

図８は図４のフローチャートの変形例を示す図であり、図４のフローチャートのステップＳ１の前段に図示のようにステップＳ０－１、Ｓ０－２を加え、ステップＳ８とＳ９の

間にステップＳ８－２とＳ８－３を加えた例である。

つまり、図４のステップＳ１の前段に図８（ａ）に示すように、「図６の例に示したように、オートシャッターモードで撮影者がカーソルキー５及びＳＥＴキー６を操作して液晶モニタ画面４上の任意の位置で始点及び終点を指定すると、制御部２２はオートシャッターエリア枠を液晶モニタ画面４上に表示する」ステップＳ０－１と、「オートシャッターエリアの４隅の座標をＲＡＭの所定エリアに保持（記憶）する」ステップＳ０－２とを加え、更に、図８（ｂ）に示すように、「被写体の輪郭を取得する」ステップＳ８－２と、「上記ステップＳ８－２で取得した被写体の輪郭の座標と上記ステップＳ０－２で設定したオートシャッターエリア枠の座標から被写体がオートシャッターエリア枠内に完全に収まったか否かを判定し、被写体がオートシャッターエリア枠内に完全に収まっている場合はステップＳ９に進み、そうでない場合はステップＳ７に戻る」ステップＳ８－３を加えるようにする。

なお、上記ステップＳ８－２における被写体の輪郭取得は公知の方法によればよく、例えば、輪郭抽出によって被写体の輪郭を抽出する場合はデジタルカメラ１に公知の輪郭抽出方法で輪郭抽出を行う方法輪郭抽出部を設けてもよい。

【００６１】

このように構成することにより、図４のステップＳ１において撮影者が指定されたオートシャッターエリア枠がスルー画像と共に液晶モニタ画面４に表示されるので、撮影者がカメラを動かして撮影したい被写体がオートシャッターエリア枠内に収まるようにするか被写体がオートシャッターエリア枠内に収まるのを待つようにすれば、図４のステップＳ２、Ｓ３で手ブレ状態が判定され、ステップＳ４でカメラを構え直して手ブレを抑制するとステップＳ５で自動合焦が行われ、ステップＳ７、Ｓ８により被写体のブレの有無が判定され、被写体のブレがないと判定されると更に被写体がオートシャッターエリア枠内に収まっているか否かをステップＳ８－２、Ｓ８－３で調べ、被写体がオートシャッターエリア枠内に完全に収まっている場合にステップＳ９でオートシャッター撮影が行われる。

【００６２】

つまり、従来、シャッター操作で被写体を撮影する場合はシャッターキーを押す指の反応次第でせっかく被写体が静止してもシャッターチャンスを逃す場合があったが、上記本発明の構成により、撮影者はオートシャッターエリア枠内に被写体を収めるようにしていれば移動する被写体がオートシャッターエリア枠で静止したときに自動撮影がなされるので、シャッターチャンスを逃すようなことがない。

【００６３】

＜変形例３＞

静止した状態を判定する場合、ジャイロ方式にしろ動きベクトル方式にしろある閾値を設けて判断しているが（図４のステップＳ３、Ｓ８、図５のステップＳ９－４参照）、その閾値をカメラのシャッター速度に合わせて変化させるようにしてもよい。例えば、明るい状況ではＡＥ制御によりシャッター速度が速くなるため手ブレを気にしなくてもよいので閾値を甘く設定し、暗い状況ではＡＥ制御によりシャッター速度が遅くなり、手ブレの可能性が高くなるので閾値を厳しく設定するようにしてもよい。

【００６４】

図９はブレ判定用閾値設定テーブルの構成例を示す図であり、ブレ判定用閾値設定テーブル９０はシャッタースピードｔが速くなるほどブレ判定用閾値γを大きくするようにシャッタースピードｔ１、ｔ２、・・・、ｔｎとブレ判定用閾値γ１、γ２、・・・、γｎを対応付けてプログラム格納メモリに格納されているものとする。

【００６５】

図１０は、図４のフローチャートの変形例を示す図であり、図４のフローチャートのステップＳ８を図示のように、「制御部２２は上記ステップＳ１で取込まれる被写体像の光量からシャッタースピードを決定し、図９に示したようなブレ判定用閾値設定テーブル９０から決定されたシャッタースピードに対応付けられたブレ閾値を取り出して画像のブレ判定用の閾値とする」ステップＳ８－１と、「上記ステップＳ７で取得した画像のブレ量

と上記ステップＳ８－１で取得した閾値とを比較して画像のブレ量が閾値以上の場合にはステップＳ７に戻り、手ブレ量が閾値未満の場合にはステップＳ９に進む」ステップＳ８－２に置き換える。

【００６６】

ブレを最小限に押さえても必ずしも思い通りのシャッターチャンスで撮影できるというわけではないが、上記図１０のフローチャートに示したように画像のブレ判定用閾値を自動変更可能にすることによって、可能な範囲でシャッターチャンスを生かした撮影ができるようにしながらも、画像のブレの危険度が増すような状況では画像のブレ防止を優先させるような自動制御ができる。

【００６７】

上記実施形態及び各変形例の説明では電子カメラとしてデジタルカメラを例としたが、電子カメラという語は、デジタルカメラ等のほか、カメラ付き携帯電話機や撮像部を有する情報機器などにも適用し得るものである。

【００６８】

以上、本発明のいくつかの実施例について説明したが本発明は上記各実施例に限定されるものではなく、種々の変形実施が可能であることはいうまでもない。

【図面の簡単な説明】

【００６９】

【図１】本発明に係る電子カメラの一例としてのデジタルカメラの一実施例の外観を示す図である。

【図２】図１に示したデジタルカメラの電子回路構成の一実施例を示す図である。

【図３】オートシャッター機能の説明図である。

【図４】オートシャッターモードにおけるデジタルカメラの動作概要を示すフローチャートである。

【図５】図４のフローチャートの変形例を示す図（フローチャート）である。

【図６】オートシャッターエリア設定の説明図である。

【図７】オートシャッターエリアにおけるオートシャッター撮影の説明図である。

【図８】図４のフローチャートの変形例を示す図（フローチャート）である。

【図９】ブレ判定用閾値設定テーブルの構成例を示す図である。

【図１０】図４のフローチャートの変形例を示す図（フローチャート）である。

【符号の説明】

【００７０】

１　デジタルカメラ（電子カメラ）

５　カーソルキー（エリア指定手段）

６　ＳＥＴキー（エリア指定手段）

２２　制御部（第１の判断手段、撮影制御手段、比較手段、第２の判断手段、枠線表示手段、シャッタースピード取得手段）

２６　表示部（枠線表示手段）

３１　ブレ検出部（ブレ検出手段、第２のブレ検出手段）

３２　手ブレ検出部（ブレ検出手段、第１のブレ検出手段）

３５　被写体

９０　ブレ用閾値設定テーブル（閾値取得手段）

【図１】

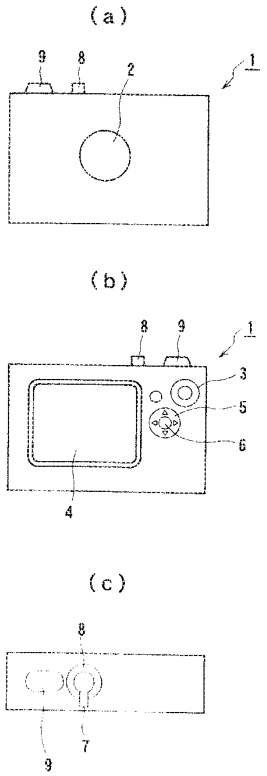
(a)
(b)
(c)

【図２】

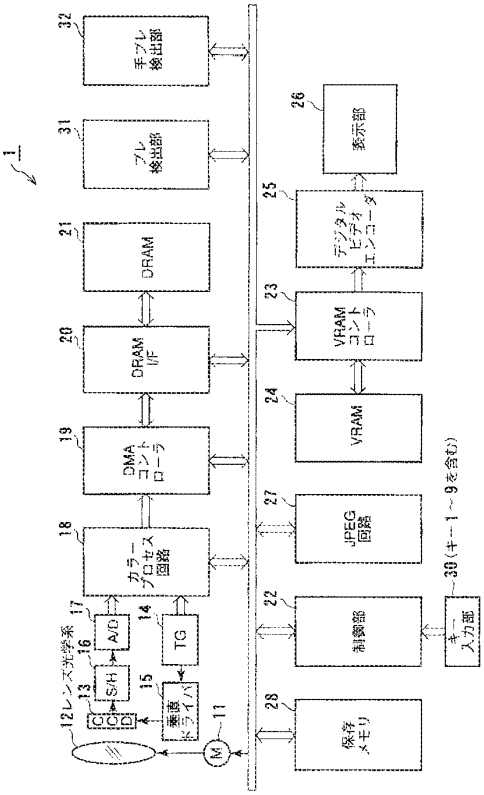
手ブレ検出部
ブレ検出部
DRAM
DRAM I/F
DMA コントローラ
カラープロセス回路
A/D
S/H
TG
撮像ドライバ
レンズ式光学系
CCD
保存メモリ
制御部
キー入力部
JPEG回路
VRAM
VRAM コントローラ
デジタルビデオエンコーダ
表示部

【図３】

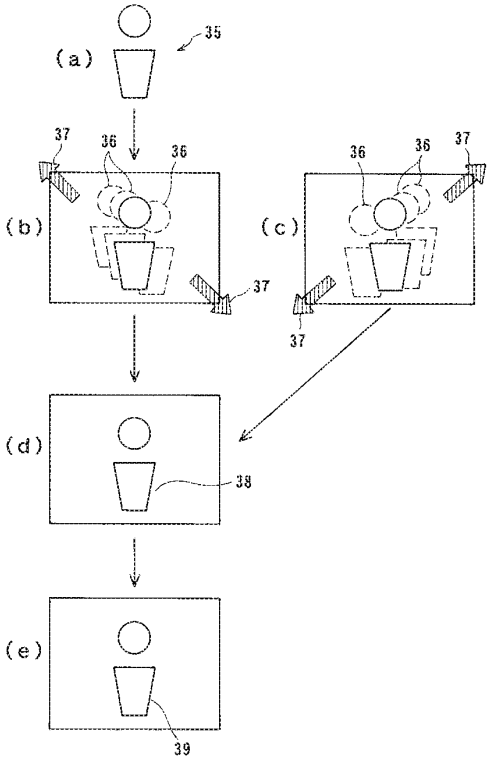
(a)
(b)
(c)
(d)
(e)

【図４】

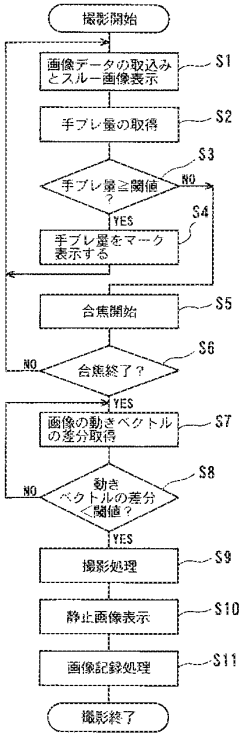
撮影開始
画像データの取込みとスルー画像表示
手ブレ量の取得
手ブレ量≧閾値？
手ブレ量をマーク表示する
合焦開始
合焦終了？
画像の動きベクトルの差分取得
動きベクトルの差分＜閾値？
撮影処理
静止画像表示
画像記録処理
撮影終了
YES
NO

【図５】

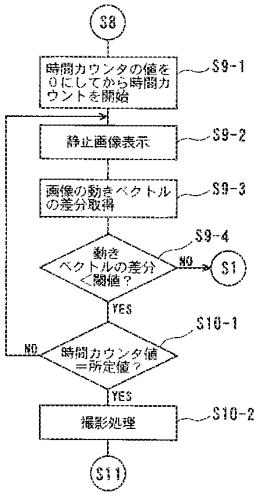
S8
時間カウンタの値を0にしてから時間カウントを開始
S9-1
静止画像表示
S9-2
画像の動きベクトルの差分取得
S9-3
動きベクトルの差分<閾値？
S9-4
NO
S1
YES
時間カウンタ値=所定値？
S10-1
NO
YES
撮影処理
S10-2
S11

【図６】

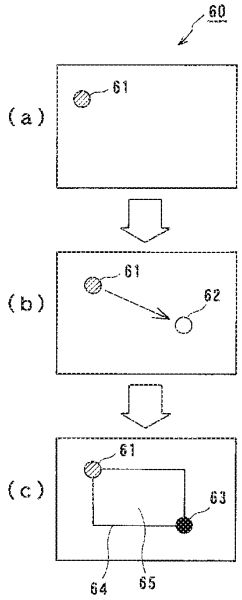
60
(a)
61
(b)
61
62
(c)
61
63
64
65

【図７】

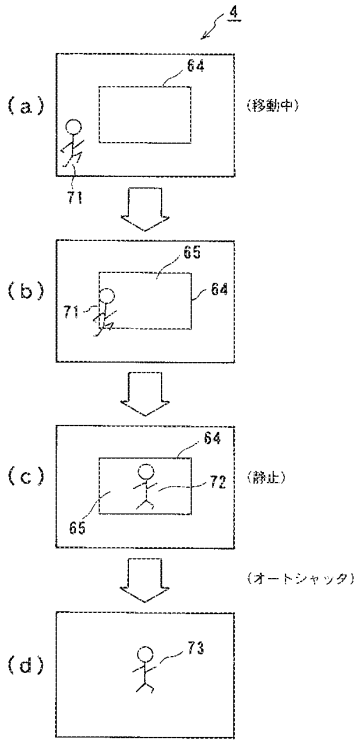
4
(a)
64
(移動中)
71
(b)
65
64
71
(c)
64
72
(静止)
65
(オートシャッタ)
(d)
73

【図８】

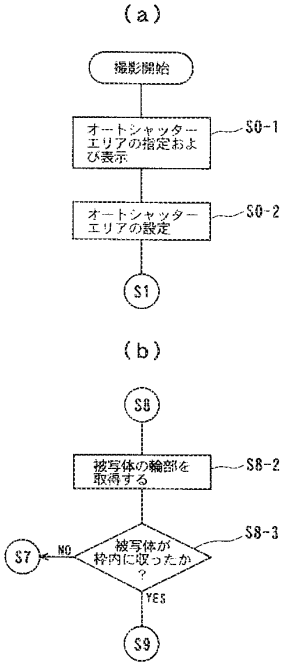
(a)
撮影開始
オートシャッターエリアの指定および表示
S0-1
オートシャッターエリアの設定
S0-2
S1
(b)
S8
被写体の輪部を取得する
S8-2
被写体が枠内に収ったか？
S8-3
NO
S7
YES
S9

【図９】

90

シャッター速度	手ブレ閾値
t_1	r_1
t_2	r_2
⋮	⋮
t_n	r_n

$t_1 > t_2 > \cdots >> t_n$

$r_1 < r_2 < \cdots << r_n$

【図１０】

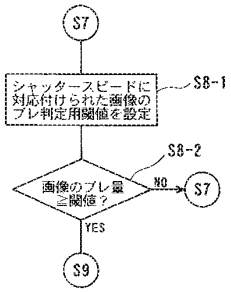

(19) Japanese Patent Office (JP)

(11) Publication number

(12) Laid-open Disclosure Public Patent Bulletin (A)

2006-174105

(P2006-174105A)

(43) Publication Date: June 29, Heisei 18 (2006.6.29)

(51) Int. Cl.	FI		Theme Code (Reference)
H04N 5/232 (2006.01)	H04N 5/232	Z	5C122
H04N 101/00 (2006.01)	H04N 101:00		

Request for Examination: Not Requested

Number of Claims: 9 OL (16 pages total)

(21) Application Filing Number:
Tokugan 2004-364022 (P2004-364022)

(22) Application Filing Date:
December 16, Heisei 16 (2004.12.16)

(71) Applicant: 000001443
Casio Computer Co., Ltd.
1-6-2 Hommachi, Shibuya-ku, Tokyo

(74) Agent: 100090619
Mikio Chonan, Patent Attorney

(72) Inventor: Akira Miyata
Hamura R & D Center,
Casio Computer Co., Ltd.,
3-2-1, Sakae-cho, Hamura-shi, Tokyo

F-term (reference): 5C122 DA04 EA41 FH12 FH13 GA23 HA78 HB01

(54) TITLE OF THE INVENTION

Electronic Camera and Program

(57) ABSTRACT (Amended)

OBJECTIVE: To provide an electronic camera and a program that make it possible to capture photographic subjects into images that are not unfocused/blurry.

MEANS FOR RESOLUTION: In the course of capturing an image of a photographic subject 35 with a digital camera, a live-preview image 36 may appear unfocused and thus blurry due to camera shake or motion blur as illustrated in the diagrams (b) and (c). However, if camera shake is detected, a warning will be displayed by means of arrows 37. In response thereto, the photographer adjusts his or her grip on the camera and thereby controls the camera shake. If the photographic subject 35 practically stops moving as illustrated in the diagram (d) while the photographer is controlling the camera shake, a still live-preview image will be displayed and the blur will disappear. In this state, if the amount of blur is at or less than a prescribed threshold value, the automatic shooting mode is activated to shoot the image, thereby automatically capturing a still image 39 (e) that is not unfocused/blurry.

SELECTED DRAWING: Figure 3

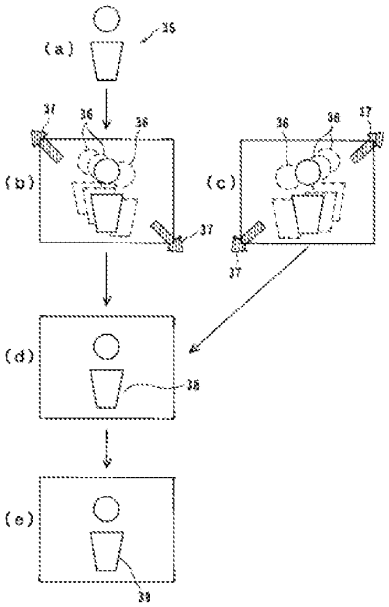

WHAT IS CLAIMED IS:

CLAIM 1

An electronic camera, which is provided with:

An image-capturing means for capturing a photographic subject and obtaining its photographic image;

A blur-detection means for detecting blur in an image, doing so based on the image that has been taken in by the aforesaid image-capturing means;

A first-assessment means for assessing whether or not the blur in an image detected by the aforesaid blur-detection means is less than a prescribed threshold value; and

A photo-shooting control means for executing a photo-shooting process when the aforesaid first-assessment means determines that the blur is less than a prescribed threshold value.

CLAIM 2

The electronic camera according to Claim 1, wherein the aforesaid first-assessment means comprises a comparison means for comparing the blur in an image (which is detected by the aforesaid blur-detection means) with a prescribed threshold value, and determines whether or not the blur in the image is less than the prescribed threshold value based on the result of comparison by said comparison means.

CLAIM 3

The electronic camera according to Claim 1 or Claim 2, wherein:

The aforesaid blur-detection means comprises a first blur-detection means for detecting shaking of the main body of an electronic camera, and a second blur-detection means for detecting blur in an image;

The aforesaid comparison means comprises a first comparison means for comparing the shaking of the main body of the electronic camera (which is detected by the aforementioned first blur-detection means) with a first threshold value, and a second comparison means for comparing the blur in an image (which is detected by the aforementioned second blur-detection means) with a second threshold value;

The aforesaid second blur-detection means detects blur in a target region of the image taken in by the aforementioned image-capturing means, doing so when the result of comparison by the

aforementioned first comparison means is less than the first threshold value; and

The aforesaid photo-shooting control means executes a photo-shooting process when the result of comparison by the aforementioned second comparison means is less than the second threshold value.

CLAIM 4

The electronic camera according to any of the claims 1 through 3, which is further provided with an elapsed-time measurement means for measuring the time elapsed from the moment when the aforementioned first-assessment means determines that it is less than a prescribed threshold value; wherein the aforesaid photo-shooting control means executes a photo-shooting process when the measurement obtained by the aforementioned elapsed-time measurement means indicates a passing of a prescribed time.

CLAIM 5

The electronic camera according to any of the claims 1 through 4, which is further provided with a second assessment means for determining whether or not a photographic subject's figure is fitted within a prescribed area of the image taken in by the aforementioned image-capturing means; wherein the aforesaid photo-shooting control means executes a photo-shooting process when:

The aforesaid first-assessment means determines that it is less than a prescribed threshold value; and

The aforementioned second assessment means determines that the photographic subject's figure is fitted within the prescribed area.

CLAIM 6

The electronic camera according to Claim 5, which is further provided with an area setting means for specifying a given area in an image taken in by the aforementioned image-capturing means; wherein the aforesaid second assessment means determines whether the photographic subject's figure is fitted within such a given area of the image captured by the aforementioned image-capturing means as specified by the aforementioned area-designation means.

CLAIM 7

The electronic camera according to Claim 5 or Claim 6, which is further provided with a frame-border indication means for indicating a frame border that demarcates the area specified by the aforesaid area-designation means from the other areas.

CLAIM 8

The electronic camera according to any of the claims 1 through 7, which is further provided with:

A shutter-speed acquisition means for obtaining a shutter speed based on brightness; and

A threshold-value acquisition means for obtaining a threshold value according to the shutter speed obtained by the aforesaid shutter-speed acquisition means; wherein:

The aforesaid first-assessment means determines whether or not blur in an image detected by the aforementioned blur-detection means is less than the threshold value obtained by the aforementioned threshold-value acquisition means.

CLAIM 9

A program, which causes a computer in the electronic camera to execute:

A function performed to capture a photographic subject and thus obtain a photographic image thereof;

A function performed to detect blur in the image, doing so based on the photographic image thus obtained;

A function performed to determine whether the detected blur in the image is less than a prescribed threshold value; and

A function performed to execute a photo-shooting process when it is determined that the blur is less than the prescribed threshold value.

DETAILED DESCRIPTION OF THE INVENTION

TECHNOLOGICAL FIELD

[0001]

The present invention pertains to a photographic technology for capturing and thus obtaining an image, which is not unfocused/blurry, with an electronic camera, such as a digital camera.

BACKGROUND OF THE ART

[0002]

To capture an image with a camera, usually the camera user presses the shutter, etc., in order to command the camera to capture an image. In this event, if the user elects to shoot an image while holding the camera steady with his or her hand(s), instead of firmly attaching the camera on a camera-securing device, such as a tripod, the user tends to encounter problems because the user may accidentally cause camera shake due to unsteady hands while pressing the shutter, and thereby cause the captured image to be unfocused and blurry. One of the conventional technologies used to control camera shake is configured to detect camera shake and generates a warning for the photographer, thereby prompting the user to hold the camera in a more stable manner.

[0003]

Examples of such a camera include the following:

A camera that is provided with a first-assessment means for assessing whether the output of an acceleration sensor is greater than a prescribed value, and a second assessment means for determining when a change of an image signal reaches at or exceeds a prescribed amount — so as to generate warnings according to the results of assessments by the first and second assessment means (see Patent Literature 1, for example); and

An electronic still camera that is configured to save an image of a photographic subject captured during a shutter operation while also automatically obtaining images of the photographic subject before and after the shutter operation — so as to generate a warning when camera shake is detected based on a comparison between the image during the shutter operation and the before-/after-images (see Patent Literature 2, for example).

[0004]

Also, there is a camera-shake correction device that uses an electronic camera-shake correction scheme designed for electronic still-image systems, such as digital cameras. An example of such a device is an electronic still-image system that is provided with a camera-shake detection means for detecting an amount of camera shake, and an exposure-control means for allowing an image sensor to be exposed to light only at the timing when the amount of camera shake detected by the camera-shake detection means is within a

prescribed range (see Patent Literature 3, for example).

[Patent Literature 1] JP,2003-140219,A
[Patent Literature 2] JP,2870772,B
[Patent Literature 3] JP,11-266392,A

DISCLOSURE OF THE INVENTION

OBJECTIVE TO BE ACHIEVED BY THE INVENTION

[0005]

According to the aforementioned Patent Literature 1, a warning is displayed every time a photographic subject is not focused and thus blurry beyond a prescribed level. In response to the warning, the photographer can adjust his or her grip on and restabilize his or her camera each time, and then press the shutter to shoot an image. However, an unfocused, blurry image can result from both camera shake due to unsteady hands and due to movement of the photographic subject (hereinafter referred to as the "motion blur"). Therefore, one of the challenges the user faces in this regard has been that, even if the photographer successfully eliminates camera shake due to unsteady hands by adjusting his or her grip on the camera, he or she cannot control the motion blur of the photographic subject, meaning that he or she cannot prevent motion blur in an image captured if the photographic subject makes a movement during the shutter operation.

[0006]

Also, in the event that camera shake occurs due to unsteady hands during a shutter operation, the technology disclosed in the aforementioned Patent Literature 2 detects and generates a warning of the camera shake concerned. Therefore, it offers a benefit in that the user can reshoot an image on the spot. However, this technology also poses challenges in that it is not capable of preventing camera shake before it happens, nor can it prevent motion blur in an image captured if the photographic subject makes a movement during the shutter operation —the same as in the case of the aforementioned Patent Literature 1.

[0007]

Furthermore, the technology disclosed in the aforementioned Patent Literature 3 is configured to allow optical exposure only at the timing when a camera-shake signal (which is indicative of the amount of camera shake detected by the camera-shake detection means) is within a certain range, so as to thereby ensure that only screen images with steady positioning of the photographic subject are obtained. And, this makes it possible to capture a still image while controlling camera shake. However, in the same way as in the case of the aforementioned patent literatures 1 and 2, the technology disclosed in the aforementioned Patent Literature 3 poses challenges in that it cannot prevent motion blur in an image captured if the photographic subject makes a movement during the shutter operation.

[0008]

The present invention was achieved in order to resolve the aforementioned challenges of the conventional technologies, and is intended to provide an electronic camera and a program that make it possible to capture photographic subjects into images that are not unfocused/blurry.

MEANS FOR ACHIEVING THE OBJECTIVE

[0009]

In order to resolve the aforementioned objective, the invention according to Claim 1 provides an electronic camera, which is provided with:

An image-capturing means for capturing a photographic subject and obtaining its photographic image;

A blur-detection means for detecting blur in an image, doing so based on the image that has been taken in by the image-capturing means;

A first-assessment means for assessing whether or not the blur in an image detected by the blur-detection means is less than a prescribed threshold value; and

A photo-shooting control means for executing a photo-shooting process when it is determined by the first-assessment means that the blur is less than a prescribed threshold value.

This makes it possible to perform a photo-shooting process — without a shutter operation — when blur in the image is less than a prescribed threshold value, and thereby to prevent capturing images that are not focused and thus blurry due to camera shake (which tends to occur during a shutter operation, for example, when the shutter key is pressed, or the like) and/or motion blur (due to movement of the photographic subject that is made during a fraction of time from the moment when the photographer recognizes that a photographic subject is still until the moment when he or she presses the shutter key). It also becomes possible to ensure that an image is captured at the exact moment when the photographic subject is still for certain.

[0010]

Also, the invention according to Claim 2 provides the electronic camera according to Claim 1, wherein the first-assessment means comprises a comparison means for comparing blur in an image (which is detected by the blur-detection means) with a prescribed threshold value, and determines whether or not the blur in the image is less than the prescribed threshold value based on the result of comparison by said comparison means. Even when a photographic subject is still, a slight motion is unavoidable because of the presence of vibration due to other environmental factors, a slight swaying motion of the photographic subject itself, and the like. Consequently, there is a chance that the photographer may miss the shutter chance if he or she waits

until the photographic subject becomes completely still. However, by setting a threshold value in this way, the present invention can truncate the slight blur mentioned above so as to treat it as the state of being still, and thereby allows the photographer to capture an image with an automatic-shooting mode without missing a shutter chance.

[0011]

Also, the invention according to Claim 3 provides the electronic camera according to Claim 1 or Claim 2, wherein:

> The blur-detection means comprises a first blur-detection means for detecting shaking of the main body of an electronic camera, and a second blur-detection means for detecting blur in an image;
>
> The comparison means comprises a first comparison means for comparing the shaking of the main body of the electronic camera (which is detected by the aforementioned first blur-detection means) with a first threshold value, and a second comparison means for comparing the blur in an image (which is detected by the aforementioned second blur-detection means) with a second threshold value;
>
> The second blur-detection means detects blur in a target region of the image taken in by the aforementioned image-capturing means, doing so when the result of comparison by the aforementioned first comparison means is less than the first threshold value; and
>
> The photo-shooting control means executes a photo-shooting process when the result of comparison by the aforementioned second comparison means is less than the second threshold value.

Thus, the electronic camera detects blur in the image after ensuring that camera shake due to unsteady hands is mostly eliminated. Therefore, it can capture an image in the state in which the photographic subject is mostly still, doing so without a shutter operation (i.e., in an automatic-shooting mode). It can also prevent the captured image from being unfocused and blurry due to camera shake (which tends to occur during a shutter operation, for example, when the shutter key is pressed, or the like) and/or motion blur (due to the movement of the photographic subject that is made during a fraction of time from the moment when the photographer recognizes that a photographic subject is still until the moment when he or she presses the shutter key). Hence, the photographer can capture an image without an unfocused blurry photographic subject, insofar as he or she holds the camera steady so as to prevent camera shake.

[0012]

Also, the invention according to Claim 4 provides the electronic camera according to any of the claims 1 through 3, which is further provided with an elapsed-time measurement means for measuring the time elapsed from the moment when the aforementioned first-assessment means determines that it is less than a prescribed threshold value; wherein the photo-shooting control means executes a photo-shooting process

when the measurement obtained by the aforementioned elapsed-time measurement means indicates a passing of a prescribed time. This makes it possible to create some time gap from the moment when the electronic camera determines that there is no blur, until the moment when an automatic shooting is executed, thereby providing the photographer with some time to confirm the composition of the image.

[0013]

Also, the invention according to Claim 5 provides the electronic camera according to any of the claims 1 through 4, which is further provided with a second assessment means for determining whether or not a photographic subject's figure is fitted within a prescribed area of the image taken in by the aforementioned image-capturing means; wherein the photo-shooting control means executes a photo-shooting process when:

The first-assessment means determines that it is less than a prescribed threshold value; and

The aforementioned second assessment means determines that the photographic subject's figure is fitted within the prescribed area.

This makes it possible to obtain an image in the state in which the photographic subject's figure is fitted within the prescribed area of the image thus captured.

[0014]

Also, the invention according to Claim 6 provides the electronic camera according to Claim 5, which is further provided with an area-setting means for specifying a given area within an image taken in by the aforementioned image-capturing means; wherein the second assessment means determines whether the photographic subject's figure is fitted within such a given area of the image taken in by the aforementioned image-capturing means as specified by the aforementioned area-designation means. This makes it possible to obtain an image in the state in which the photographic subject's figure is fitted within a user-specified area of the image thus captured.

[0015]

Also, the invention according to Claim 7 provides the electronic camera according to Claim 5 or Claim 6, which is further provided with a frame-border indication means for indicating a frame border that demarcates the area specified by the area-designation means from the other areas. As such, because the area concerned is demarcated from the other sections by mean of a frame border, it becomes easier for the photographer to move the camera so as to ensure that a photographic subject is situated within the frame of the area.

[0016]

Also, the invention according to Claim 8 provides the electronic camera according to any of the claims 1 through 7, which is further provided with:

A shutter-speed acquisition means for obtaining a shutter speed based on brightness; and

A threshold-value acquisition means for obtaining, as the aforementioned first threshold value, a threshold value according to the shutter speed obtained by the shutter-speed acquisition means; wherein:

The first-assessment means determines whether or not blur in the image detected by the aforementioned blur-detection means is less than the first threshold value obtained by the aforementioned threshold-value acquisition means.

This makes it possible to automatically alter the threshold value that is applied for the assessment of the presence/absence of camera shake, and thus enable automatic control, which allows handheld shooting in such a way as to efficiently utilize the benefit of a shutter chance to the extent possible, doing so while prioritizing the camera-shake prevention features in circumstances with a high risk of camera shake.

[0017]

Also, the invention according to Claim 9 provides a program that causes a computer in the electronic camera to execute the following functions:

A function performed to capture a photographic subject and thus obtain a photographic image thereof;

A function performed to detect blur in the image, doing so based on the photographic image thus obtained;

A function performed to determine whether the detected blur in the image is less than a prescribed threshold value; and

A function performed to execute a photo-shooting process when it is determined that the blur is less than the prescribed threshold value.

This makes it possible for the electronic camera to perform a photo-shooting process when the blur is less than the prescribed threshold value, doing so automatically without requiring an image-capture command via a shutter operation.

EFFECTS OF THE INVENTION

[0018]

According to the present invention, the electronic camera performs a photo-shooting process when blur is less than a prescribed threshold value, doing so without a shutter operation; and, therefore, captured images will not be unfocused/blurry due to camera shake (which tends to occur during a shutter operation, for example,

when the shutter key is pressed, or the like) and/or motion blur (due to the movement of the photographic subject that is made during a fraction of time from the moment when the photographer recognizes that a photographic subject is still until the moment when he or she presses the shutter key). Thus, the present invention can ensure that an image is captured at the exact moment when the photographic subject is still for certain. It also makes it possible for the photographer to capture an image without causing the photographic subject to be unfocused and thus blurry, insofar as he or she holds the camera steady so as to prevent camera shake.

BEST MODES OF IMPLEMENTING THE INVENTION

[0019]

Figure 1 shows diagrams that illustrate the external appearance of a working example of a digital camera, which is presented herein as an example of the electronic camera as claimed by the present invention; wherein Figure 1 (a) shows the front view; Figure 1 (b) shows the back view; and Figure 1 (c) shows the top view. In Figure 1, the digital camera 1 has an imaging lens 2 on the front-surface side as illustrated in Figure 1 (a). Additionally, a mode dial 3, liquid-crystal-display monitor screen 4, cursor keys 5, SET key 6, etc., are provided on the back surface of the digital camera 1 as shown in Figure 1 (b). And, a zoom lever 7, a shutter key 8, and a power button 9 are provided on the top surface as illustrated in Figure 1 (c). Also, though not shown in the figure, a USB-terminal connection part, which is used for the connection with an external device, such as a personal computer (hereinafter referred to as a "PC") or a modem, via a USB cable is provided in the lateral side.

[0020]

Figure 2 shows a diagram that illustrates a working example of the electronic circuit configuration of the digital camera shown in Figure 1. In Figure 2, the digital camera 1 is provided with the following elements:

A motor 11, which is used to move the focal point and/or aperture stop position in the shooting mode set as the dominant mode,
A lens optical system 12 that constitutes the imaging lens 2,
A CCD 13 acting as an image sensor,
A timing generator (TG) 14,
A vertical driver 15,
A sample hold circuit (S/H) 16,
An A/D converter 17,
A color process circuit 18,
A DMA (Direct Memory Access) controller 19,
A DRAM interface (I/F) 20,
A DRAM 21,
A control part 22,

A VRAM controller 23,
A VRAM 24,
A digital video encoder 25,
A display part 26,
A JPEG circuit 27,
A storage memory 28,
A key input part 30, and
A blur-detection part 31.

It should be noted that, in the present invention, the above-listed elements from the motor 11 through the color process circuit 18 correspond to the image-capturing part. Also, a camera-shake detection part 32 is not imperative.

[0021]

In the monitoring state during the shooting mode, the focal point and the aperture stop position move upon actuation of the motor (M) 11; and the timing generator (TG) 14 and the vertical driver 15 drive the scanning operation of the CCD 13 (acting as an image sensor), which is situated behind the aforementioned lens optical system 12 (constituting the imaging lens 2) along the photographing optical axis — so as to output a single-frame portion of the output of photoelectric conversion corresponding to an optical image formed per constant period. The CCD 13 is a solid-state imaging device that captures a two-dimensional image of a photographic subject. Typically, it captures images at several tens of frames per second. It should be noted that the image sensor is not limited to a CCD, but may be another solid-state imaging device, such as a CMOS (Complementary Metal Oxide Semiconductor).

[0022]

Such a photoelectric conversion output is then:

Sampled and held in the sample hold circuit (S/H) 16 after the gain thereof in the analog-value signal state is adjusted as appropriate for each primary color component of RGB;

Transformed into digital data by the A/D converter 17; and

Subjected to color processing (including an image interpolation process and a gamma correction process) in the color process circuit 18 — so as to thereby generate digital-value luma signal Y and chroma signals Cb and Cr, which are then, in the normal shooting mode, output to the DMA (Direct Memory Access) controller 19.

[0023]

In the normal shooting mode, the DMA controller 19 transfers, in the DMA mode, the luma signal Y and chroma signals Cb and Cr (which have been output from the color process circuit 18) to the DRAM 21 (which

is used as a buffer memory) via the DRAM interface (I/F) 20, doing so through the use of a composite synchronization signal, a memory-write-in enable signal, and a clock signal (which are also output from the color process circuit 18).

[0024]

The control part 22 is responsible for control actions of the entire digital camera 1. It comprises the following elements:

A CPU or MPU (hereinafter referred to as "CPU");

A program storage memory, such as a flash memory or the like, which permanently stores operation programs that are executed by said CPU to perform processes including the automatic-shooting process in the shooting mode as described in a later section; and

A RAM or the like, which is used as a work memory.

Thus, upon completion of the DMA transfer of the aforementioned luma and chroma signals to the DRAM 21, the control part 22 reads out said luma and chroma signals from the DRAM 21 through the intermediation of the DRAM interface 20, and then writes the luma and chroma signals into the VRAM 24 through the intermediation of the VRAM controller 23.

[0025]

Additionally, the control part 22 retrieves a processing program and menu data that support each mode (such processing program and menu data being stored in the program storage memory, such as a flash memory) in response to status signals from the key input part 30, and undertakes the control of the execution of other respective functions of the digital camera 1 (e.g., execution of the function performed to capture an image, the function performed to reproduce a recorded image, etc.), as well as control in regard to the display of the function selection menu used for the selection of such functions, and the like.

[0026]

The digital video encoder 25 periodically reads out the aforementioned luma and chroma signals from the VRAM 24 through the intermediation of the VRAM controller 23, generates video signals based on such data, and outputs them to the aforementioned display part 26.

[0027]

The display part 26 acts as a monitor display section (electronic finder) in the shooting mode as described above. It presents displays according to video signals from the digital video encoder 25, thus displaying images based on image information that is fetched from the VRAM controller 23 as of the given moment, doing so in real time on the liquid-crystal-display monitor screen 4.

[0028]

When the amount of camera shake is less than a prescribed threshold value, the control part 22 sends a driving control signal to the motor 11 so as to cause the imaging lens of the lens optical system 12 to move

and thus achieve the autofocus (AF) operation (see the steps S3 and S4 in Figure 4). And, if blur in the image is less than a prescribed threshold value, then the control part 22 will activate the automatic-shooting mode; that is, upon completion of the DMA transfer of a one-frame portion of luma and chroma signals (which are being fetched from the CCD 13 as of the given moment) to the DRAM 21, the control part 22 immediately shuts down the route from the CCD 13 to the DRAM 21 and transitions into the record/save mode (see the steps S8 and S9 in Figure 4).

[0029]

In said save/record mode, the control part 22 reads out the one-frame portion of luma and chroma signals that is being written into the DRAM 21 in the unit of a so-called basic block of 8 vertical pixels x 8 horizontal pixels, doing so for each of the components Y, Cb and Cr through the intermediation of the DRAM interface 20, and writes the read-out signals in the JPEG (Joint Photograph cording Experts Group) circuit 27. In said JPEG circuit 27, the data is compressed through a process such as ADCT (Adaptive Discrete Cosine Transform), Huffman encoding (an entropy-code-modulation scheme), etc. The coded data thus obtained is read out from the JPEG circuit 27, and recorded as a single-image data file on the storage memory 28 (which is a recording medium of the digital camera 1). And, upon completion of the compression of a one-frame portion of luma and chroma signals, and the writing of the compressed data into the storage memory 28, the control part 22 reactivates the route from the CCD 13 to the DRAM 21.

[0030]

And, in the reproduction mode (which is herein defined as the dominant mode), the control part 22 selectively reads out image data recorded on the storage memory 28, decompresses the compressed image data in steps that are the complete opposite of the steps used when the data was compressed in the JPEG circuit 27 during the image shooting mode, then restores and thus stores the decompressed image data in the VRAM 24 through the intermediation of the VRAM controller 23. Thereafter, the control part 22 reads out the image data from said VRAM 24 periodically, and generates video signals based on said image data, and outputs (= displays) reproduced images on the liquid-crystal-display monitor screen 4 of the display part 26.

[0031]

The key input part 30 comprises the above-mentioned mode dial 3, cursor keys, SET key, zoom lever 7, shutter key 8, power button 9, etc. A signal associated with the operation of each key is transmitted to the direct control part 22.

[0032]

The mode dial 3 is a dial key, which the user operates when selecting various modes. It should be noted that the present invention may be configured to allow the user to select a mode from a menu. The cursor keys 5 are used when the user points to (specifies) a menu, an icon, or the like (which is displayed on the liquid-crystal-display monitor screen 4) through the use of a cursor. Hence, the user can move the cursor up and down or from right to left through the operation of the cursor keys 5. And, the SET key 6 is a key that the user presses when confirming the result of an operation performed through the use of the cursor keys 5. For example, on the automatic-shooting setting screen 60 shown in Figure 6, the photographer may operate the

cursor keys 5 and the set key 6 to set an automatic-shooting area, thereby enabling an image to be automatically captured when the photographic subject becomes still within a frame — in the automatic-shooting mode without a shutter operation — as described in a later section.

[0033]

The zoom lever 7 is used for zooming operations. In the case of digital zooming, the zoom value is determined corresponding to the operation of the zoom lever 7. However, the actual angle of view does not change. Thus, the image having the size that corresponds to the zoom value is simply trimmed and displayed on the liquid-crystal-display monitor screen 4. Also, in the case of optical zooming, a zoom lens (variable-focal-length lens) shifts to the wide end or the telephoto end corresponding to the operation of the zoom lever 7; and the zoom value is determined also corresponding to the operation of the zoom lever 7. In this case, the angle of view in fact changes as the zoom value changes; and, thus, a wide-angle image or a telescopic image is displayed on the liquid-crystal-display monitor screen.

[0034]

The blur detection part 31 detects the presence or absence of a photographic subject's blur (unfocused blurry subject due to camera shake and/or motion blur) based on an image taken into the DRAM 21 (i.e., image data output from the color process circuit 18) while a live-preview image is being displayed on the screen. The blur detection part 31 may be configured in the form of, for example, a one-chip microcomputer that is capable of obtaining motion vectors in a target region subjected to the comparison between a currently taken-in image Gk and an image Gz taken into the DRAM 21 immediately before said image Gk is taken in (i.e., capable of obtaining information indicative of the direction and amount of movement of each element in an image), and also capable of outputting the difference ΔG (or a digital signal indicative of a numerical value that corresponds to the difference) to the control part 22. Or, in place of the blur detection part 31, a program that is capable of calculating the amount of the photographic subject's blur by obtaining motion vectors in a target region subjected to the comparison between images before and after the image concerned is taken into the DRAM 21, may be stored in the program storage memory. It should be noted that the motion vectors can be obtained through any publicly known method designed therefor.

[0035]

Any publicly known miniature seismic detector may be used as the camera-shake detection part 32, insofar as it can detect camera shake of the digital camera 1 during the shooting of a photographic subject and transmit a camera-shake detection signal (which is converted into a digital signal) to the control part 22. Examples of such a seismic detector that may be used herein include angular velocity sensors (one for detecting vertical camera shake and another for detecting horizontal camera shake), and a vibration gyroscope that uses a piezoelectric element.

[0036]

Incidentally, in the case of detecting blur from a CCD image through the use of the blur detection part 31 only, both blur due to camera shake and motion blur (= blur due to movement of the photographic subject) will be detected. Accordingly, a separate camera-shake detection sensor 32 may be provided as described above

so as to detect only the blur due to movement of the photographic subject, doing so by subtracting the result of detection by said sensor from the result of the blur detection part 31's detection of blur in a CCD image.

[0037]

Figure 3 shows a schematic diagram that illustrates the automatic-shooting feature. In Figure 3, the reference code 35 represents a photographic subject. The reference code 36 represents an unfocused, blurry live-preview image. The reference code 37 each represents an arrow that points the direction of camera shake. The reference code 38 represents a still live-preview image. And, the reference code 39 represents a still image captured without blur. If the user attempts to capture a photographic subject 35, as illustrated in Figure 3 (a), with a digital camera 1, the live-preview image 36 will be unfocused and thus blurry due to camera shake and/or motion blur, as illustrated in Figure 3 (b) or Figure 3 (c). However, when camera shake is detected, a warning is displayed by means of arrows 37. In response thereto, the photographer adjusts his or her grip on the camera and thereby controls the camera shake. If the photographic subject 35 practically stops moving as illustrated in Figure 3 (d) while the photographer is controlling the camera shake, a still live-preview image will be displayed, and the blur will disappear. In this state, if the blur is at or less than a prescribed threshold value, the automatic-shooting mode is activated to shoot the image, thereby automatically capturing a still image 39 that is not unfocused/blurry (Figure 3 (e)).

[0038]

Figure 4 shows a flowchart that illustrates an outline of the operation of the digital camera 1 in the automatic-shooting mode. This flowchart is presented in order to describe the program designed to implement, in the digital camera 1, each of the automatic-shooting functions according to the invention as claimed by the present application. The following processes are described on the assumption that they are executed fundamentally by the control part 22 in accordance with a program that is pre-stored in a program memory, such as a flash memory. However, it is not imperative to store all the functions in the program memory, but a portion or all of the functions may be implemented by means of receiving them via a network on an as-needed basis. The following provides an explanation with reference to the figures 1 through 4.

[0039]

In the automatic-shooting mode, the control part 22 executes an AE processing at a focal length corresponding to the zoom value as of the given moment, and obtains image data from the CCD 13 while adjusting white balance, in color process circuit 18, so that the white balance corresponds to the color of the light source through an automatic white-balance (AWB) processing, whereupon the control part 22 transfers the image data to the DRAM 21 in the DMA mode through the intermediation of the DMA controller 19 and the DRAM interface (I/F) 20, while rewriting the VRAM 24 with live-video preview image data (which is obtained by decimating the image data from the CCD 13) and displaying the live-preview image on the liquid-crystal-display monitor screen 4 of the display part 26 (Step S1).

[0040]

The camera-shake detection part 32 detects camera shake of the digital camera 1 and transmits the detection signal (digital signal) to the control part 22 at a predetermined time interval. Accordingly, the control

part 22, upon receipt of a camera-shake detection signal from the camera-shake detection part 32, obtains the amount of camera shake based on the detection signal thus received (Step S2).
Then, it compares the amount of camera shake with a prescribed threshold value. If the amount of camera shake is at or above a threshold value, the control proceeds to Step S4; whereas, if the amount of camera shake is less than a threshold value, the control proceeds to Step S5 (Step S3).
[0041]

When the amount of camera shake is at or above a threshold value, a mark is generated into a size that is proportional to the amount of camera shake, and then provided to the digital video encoder 25 through the intermediation of the VRAM controller 23, whereupon the digital video encoder 25 generates a video signal and outputs it to the display part 26, which then displays it on the liquid-crystal-display monitor screen 4 to thereby inform the photographer of the occurrence of camera shake. Then, the control returns to Step S1. This makes it possible to prompt the photographer to adjust his or her grip on the camera so as to stop the camera shake. It should be noted that, in case the camera-shake detection part 32 is composed of a device that can also detect the directions of camera shake in addition to the amount of camera shake, it is also possible to display arrows 37 in such a way as to indicate the amount and the directions of the blur, as shown in Figure 3 (Step S4).
[0042]

When the amount of camera shake is less than a threshold value, the control part 22 performs autofocus (AF) processing so that a prescribed focus area may come into focus (Step S5). Then, the control returns to Step S1 and repeats the aforementioned operation of steps S1 through S5 until the auto-focus processing is completed. Upon completion of the autofocus processing, the focal point is locked (Step S6), and the control proceeds to Step S7.
[0043]

The blur detection part 31 obtains motion vectors in a target region subjected to the comparison between a currently taken-in image Gk and an image Gz taken into the DRAM 21 immediately before said image Gk is taken in, and outputs the difference ΔG (or a digital signal indicative of a numerical value that corresponds to the difference) to the control part 22. Thus, the control part 22 obtains the motion vectors' difference thus received (Step S7), checks to see whether or not the motion vectors' difference Δ thus received from the blur detection part 31 is at or above a prescribed threshold value δ. If the motion vectors' difference Δ is less than a prescribed threshold value δ, it is regarded as the absence of blur (camera shake or motion blur), and the control proceeds to Step S9. If the difference Δ is at or above a prescribed threshold value δ, it is regarded as the presence of blur, and the control returns to Step S7. It should be noted that, although it is not illustrated in the figure, a live-preview image is displayed even during Step S7 and also while said assessment steps are being repeated (Step S8).
[0044]

When the absence of blur is confirmed, a photo-shooting process is executed at that moment (i.e., upon completion of the DMA transfer of a one-frame portion of image data, which has been fetched from the CCD

13, to the DRAM 21, the route from the CCD 13 to the DRAM 21 is shut down immediately, or the CCD driving scheme is immediately switched to a CCD driving scheme used during the present shooting mode, such a scheme being different from that which is used during the acquisition of a live-preview image), and thus a simulated shutter sound is output (Step S9). The contents in the VRAM 24 are rewritten with the fetched image data through the intermediation of the VRAM controller 23 so as to display the still image on the liquid-crystal-display monitor screen 4 of the display part 26 (Step S10).

[0045]

Also, an image-compression processing is rendered to the aforementioned image data that is stored in the DRAM 21 during the step S9 in parallel to the aforementioned display of the still image; and then, said compressed image data (image file) is recorded in the storage memory 28 (Step S11).

[0046]

Through the aforementioned operation illustrated in the flowchart of Figure 4, the digital camera 1 can capture an image that is not unfocused/blurry due to camera shake or the motion of the photographic subject, doing so without a shutter operation (i.e., in the automatic-shooting mode). Therefore, captured images will not be unfocused/blurry due to camera shake (which tends to occur during a shutter operation, for example, when the shutter key 8 is pressed, or the like) and/or motion blur (due to the movement of the photographic subject that is made during a fraction of time from the moment when the photographer recognizes that a photographic subject is still until the moment when he or she presses the shutter key 8). It also makes it possible for the photographer to capture an image without causing a photographic subject to be unfocused and blurry, insofar as he or she holds the camera steady so as to prevent camera shake. Furthermore, because the presence/absence, the magnitude, etc., of camera shake is indicated with marks, it is easy for the photographer to recognize the presence or absence of camera shake.

[0047]

Incidentally, the operation ranging "from the action of obtaining the amount of camera shake up to the action of indicating the amount of camera shake" is executed in the steps S3 through S5 in the above-described flowchart shown in Figure 4. However, the operation ranging "from the action of obtaining the amount of camera shake up to the action of indicating the amount of camera shake" may be executed during the autofocus processing in the steps 5 and 6, or between the steps 6 and 7. Moreover, the operation ranging "from the action of obtaining the amount of camera shake up to the action of indicating the amount of camera shake" is not imperative. Additionally, an alarm sound or the like may be output instead of the "indication by means of marks."

[0048]

<Modified Example 1>

In the above-described flowchart shown in Figure 4, an automatic-shooting process is performed in Step S8 immediately after it is determined that the amount of blur is less than a prescribed threshold value. However, an automatic-shooting process may be executed after a while (e.g., after 2 seconds or so) in order to provide

the photographer some time to confirm the composition, etc.

[0049]

Figure 5 shows a diagram that illustrates a modified example of the flowchart in Figure 4. In the modified example, the steps S9 and S10 of the flowchart in Figure 4 have been replaced as shown in Figure 5, thereby making it easier for the photographer to confirm the composition at the time when the blur is eliminated.

[0050]

In Step S8 of the flowchart in Figure 4, if the motion vectors' difference Δ is less than a prescribed threshold value δ, the control part 22 will set the value of a shooting-standby time counter T (which is retained in a prescribed area in the RAM) at 0 (zero), and then initiate the counting of the shooting-time standby counter (Step S9-1) while displaying a live-preview image on the liquid-crystal-display monitor screen 4 (Step S9-2).

[0051]

The control part 22 obtains the motion vectors' difference Δ from the blur detection part 31 (Step S9-3), and checks to see whether or not the motion vectors' difference Δ is at or above a prescribed threshold value δ. If the motion vectors' difference Δ is less than a prescribed threshold value δ, the control part 22 deems there to be the absence of blur (camera shake or motion blur), and the control proceeds to Step S10-1. However, if the difference Δ is at or above a prescribed threshold value δ, the control part 22 deems there to be the presence of blur and releases the focal-point lock (Step S9-4), and the control returns to Step S1.

[0052]

The control part 22 checks the value of the shooting-standby time counter T. And, if the value of the shooting-standby time counter T reaches a prescribed duration of time (2 seconds in this example), the control will proceed to Step S10-2; whereas, if the value is less than the prescribed duration of time, the control will return to Step S9-2 (Step S10-1).

[0053]

The control part 22 executes a photo-shooting process at that moment (i.e., upon completion of the DMA transfer of a one-frame portion of image data, which has been fetched from the CCD 13, to the DRAM 21, the route from the CCD 13 to the DRAM 21 is shut down immediately, or the CCD driving scheme is immediately switched to a CCD driving scheme used during the present shooting mode, such a scheme being different from that, which is used during the acquisition of a live-preview image), and thus outputs a simulated shutter sound (Step S10-2), and then the control proceeds to Step S11 of the flowchart in Figure 4.

[0054]

The aforementioned operation of the modified example illustrated in Figure 5 creates a small time-gap from the moment when the electronic camera assesses that there is no blur until the moment when an automatic-shooting process is executed. This allows the photographer to confirm, during the automatic-shooting process, the composition of an image based on the live-preview image currently displayed. Also, because the present modified example is configured to reassess the presence or absence of blur during the shooting-standby time, the counting of time is canceled in the event that the camera or the photographic subject moves during the shooting-standby time, whereupon the control returns to displaying a live-preview image without automatically

capturing an image through the automatic-shooting process. Therefore, the present modified example will not capture an unfocused, blurry image. Also, in the event the photographer is not satisfied with the composition, etc., of an image that is displayed in the live preview, he or she can cancel the image concerned simply by moving the camera, whereupon the control returns to displaying a live-preview image without automatically capturing an image through the automatic-shooting process. Therefore, the present modified example can capture a focused, unblurry image with a composition of the photographer's choosing.

[0055]

<Modified Example 2>

When shooting a moving photographic subject, one may want to capture an image at the point when the subject comes to a standstill in a specific area (e.g., near the center) within the camera's field of view. Herein, the present working example is described with reference to the figures 1 through 4, 6 and 7 on the assumption that the digital camera 1 performs a shooting process automatically (in the automatic-shooting mode) when a photographic subject comes to a standstill within an area that has been preset by the photographer.

[0056]

Figure 6 shows a schematic diagram that illustrates the setting of an automatic-shooting area. The reference code 61 represents the starting point of a cursor. The starting point is selected through the operation of the SET key 6, whereupon the cursor is displayed in color (e.g., blue) (Figure 6 (a)). The reference code 62 represents the cursor while it is being moved through the operation of the cursor keys 5 (Figure 6 (b)). The reference code 63 represents the end point, which is selected through the operation of the SET key 6; and upon the selection, the cursor is displayed in a color that is different from that of the starting point (e.g., in green). Also, the reference code 64 represents a rectangular frame (hereinafter referred to as the "automatic-shooting area frame"), whose diagonal line is the line segment connecting the starting point 61 and the end point 63 of the cursor. The reference code 65, which points to the inside of the rectangular frame, represents an area (hereinafter referred to as the "automatic-shooting area") that is set so as to allow the automatic shooting to be activated when a photographic subject comes to a standstill within said area (Figure 6 (c)).

[0057]

In Step S0 shown in Figure 8 (the detail of which shall be described in a later section), once the starting point 61 and the end point 63 are specified through the operation of the cursor keys 5 and the SET key 6 as described above, an automatic-shooting area 65 is set as surrounded by the automatic-shooting area frame 64. And, the automatic-shooting area frame 64 is displayed on the screen.

[0058]

Figure 7 shows a schematic diagram that illustrates the automatic shooting of a photographic subject within the automatic-shooting area 65. The reference code 71 represents a photographic subject in motion. The reference code 72 represents the photographic subject that has come to a standstill (and thus focused without blur) within the automatic-shooting area 65. And, the reference code 73 represents an image of the photographic subject as captured in the automatic-shooting mode.

[0059]

Figure 7 (a) illustrates the state in which a live-preview image of a moving photographic subject 71 is displayed on the screen but away from the automatic-shooting area frame 64. Figure 7 (b) illustrates the state in which the photographic subject 71 has approached the automatic-shooting area frame 64, or the state when the photographer has moved the camera in an attempt to fit the photographic subject 71 within the automatic-shooting area frame 64. Figure 7 (c) illustrates the photographic subject 72 that has come to a standstill within the automatic-shooting area 65. Figure 7 (d) illustrates a still image 73 of the photographic subject as captured in the automatic-shooting mode upon confirmation of the absence of blur.

[0060]

Figure 8 shows a diagram that illustrates a modified example of the flowchart in Figure 4. In the present example, as shown in the figure, steps S0-1 and S0-2 are added to the first half of Step S1 in the flowchart of Figure 4, and steps S8-2 and S8-3 are added between the steps S8 and S9. To be more specific, the following steps are added to the first half of Step S1 of the flowchart of Figure 4 as illustrated in Figure 8 (a):

> Step S0-1, in which "the control part 22 displays an automatic-shooting area frame on the liquid-crystal-display monitor screen 4 when the photographer specifies a starting point and an end point at any given positions on the liquid-crystal-display monitor screen 4 through the operation of the cursor keys 5 and the SET key 6 in the automatic-shooting mode — as illustrated in the example of Figure 6; and
>
> Step S0-2 of "retaining (storing) the coordinates of the four corners of the automatic-shooting area in a prescribed area of a RAM."

And the following steps are further added as shown in Figure 8 (b):

> Step S8-2 of "obtaining the contour of the photographic subject"; and
>
> Step S8-3, in which "it is assessed whether the photographic subject has been completely fitted within the automatic-shooting area frame, doing so based on the coordinates of the contour of the photographic subject as obtained in the aforementioned step S8-2 and the coordinates of the automatic-shooting area frame as set in the aforementioned step S0-2, whereupon the control will proceed to Step S9 if the photographic subject has been completely fitted within the automatic-shooting area frame, but otherwise returns to Step S7."

It should be noted that the aforementioned acquisition of the contour of a photographic subject in Step S8-2 may be performed through a publicly known method. For example, in order to extract the contour of a photographic subject by means of a contour tracing method, the digital camera 1 may be provided with a

contour extraction part that employs a method of extracting a contour through a publicly known contour tracing method.

[0061]

With such a configuration, it becomes possible to display the automatic-shooting area frame (which has been specified by the photographer in Step S1 of Figure 4) on the liquid-crystal-display monitor screen 4 together with a live-preview image. Thus, the photographer needs only to move the camera so as to fit a photographic subject, which he or she wants to capture, within the automatic-shooting area frame, or wait until the photographic subject moves into the automatic-shooting area frame — because, in the meantime, the digital camera 1 performs the following actions:

Assesses the state of camera shake in the steps S2 and S3 of Figure 4;

Autofocuses the photographic subject in Step S5 once the photographer adjusts his or her grip on the camera to hold it steadier and thereby control the camera shake in Step S4;

Assesses the presence or absence of any blur of the photographic subject in the steps S7 and S8;

Further checks to see whether or not the photographic subject is fitted within the automatic-shooting area frame in the steps S8-2 and S8-3 when it is determined that there is no blur of the photographic subject; and

Automatically shoots an image of the photographic subject in Step S9 if the photographic subject is fitted within the automatic-shooting area frame.

[0062]

Hence, conventionally, when attempting to capture a photographic subject through a shutter operation, the photographer may miss the shutter chance even if a photographic subject comes to a standstill after spending considerable time waiting for it — depending on the response speed of the finger that presses the shutter key. However, the aforementioned configuration of the present invention can prevent the photographer from missing shutter chances because an image will be automatically captured when a moving photographic subject comes to a standstill within an automatic-shooting area frame, insofar as the photographer ensures that the photographic subject is fit within the automatic-shooting area frame.

[0063]

<Modified Example 3>

A threshold value is set for the assessment of the state of being still, whether with a gyroscopic assessment scheme or a motion-vector-based assessment scheme (see the steps S3 and S8 in Figure 4 and Step S9-4 in Figure 5). Incidentally, the present invention may be configured to alter such a threshold value according to

the shutter speed of the camera. For example, the present invention may be configured to set a lenient threshold value in a bright environment because it is not necessary to worry about camera shake as the AE control increases the shutter speed in a bright environment, but set a stricter threshold value in a dark environment because the risk of camera shake is high as the AE control reduces the shutter speed in a dark environment.

[0064]

Figure 9 is a diagram that illustrates an example configuration of a threshold setting table for the blur assessment. The assumption herein is that the blur-assessment threshold setting table 90 is stored in the program storage memory; and, in the blur-assessment threshold setting table 90, the shutter speed values t1, t2, ... and tn and the blur-assessment threshold values γ1 and γ2, ... and γn are associated so that the blur-assessment threshold value γ increases as the shutter speed t becomes faster.

[0065]

Figure 10 shows a diagram that illustrates a modified example of the flowchart shown in Figure 4. As shown in the figure, Step S8 of the flowchart in Figure 4 is replaced with the following steps:

Step S8-1, in which "the control part 22 determines the shutter speed based on light intensity of the photographic subject's figure that is taken in during the aforementioned Step S1, and sets the threshold value for the image-blur assessment by retrieving a blur threshold value, which is associated with the shutter speed thus determined, from the blur-assessment threshold setting table 90 shown in Figure 9"; and

Step S8-2, in which "the amount of blur in the image obtained in the aforementioned Step S7 and the threshold value obtained in the aforementioned Step S8-1 are compared; and the control returns to Step S7 when the amount of blur in the image is at or above the threshold value but proceeds to Step S9 when the amount of camera shake is less than the threshold value."

[0066]

Even when the blur is minimized, it does not necessarily guarantee that an image is always captured at a desired shutter chance. However, by enabling automatic alteration of the threshold value for the image-blur assessment, as shown in the flowchart of the aforementioned Figure 10, it becomes possible to capture an image in such a way as to efficiently utilize the benefit of a shutter chance to the extent possible while prioritizing the image-blur prevention features in circumstances with a high risk of image blur.

[0067]

The aforementioned embodiment and each modified example are described with reference to an example in which a digital camera is used as a representative electronic camera. However, the term "electronic camera" may apply to devices other than digital cameras, such as camera-equipped mobile phones, information systems equipped with an imaging unit, etc.

[0068]

Although the present invention is described in the foregoing with reference to several working examples, it should be understood that the present invention is not limited to the aforementioned working examples, but various modifications may be made for the implementation.

BRIEF EXPLANATION OF THE DRAWINGS

[0069]

Figure 1 shows diagrams that illustrate external appearances of a working example of a digital camera, which is presented herein as an example of the electronic camera as claimed by the present invention.

Figure 2 shows a diagram that illustrates a working example of the electronic circuit configuration of the digital camera shown in Figure 1.

Figure 3 shows a schematic diagram that illustrates the automatic-shooting feature.

Figure 4 shows a flowchart that illustrates an outline of the operation of the digital camera 1 in the automatic-shooting mode.

Figure 5 shows a diagram (flowchart) that illustrates a modified example of the flowchart shown in Figure 4.

Figure 6 shows a schematic diagram that illustrates the setting of an automatic-shooting area.

Figure 7 shows a schematic diagram that illustrates the automatic shooting of a photographic subject within an automatic-shooting area.

Figure 8 shows a diagram (flowchart) that illustrates a modified example of the flowchart shown in Figure 4.

Figure 9 shows a diagram that illustrates an example configuration of a threshold setting table for blur assessment.

Figure 10 shows a diagram (flowchart) that illustrates a modified example of the flowchart shown in Figure 4.

DESCRIPTION OF REFERENCE CODING

[0070]

1 ... Digital camera (electronic camera)

5 ... Cursor keys (area-designation means)

6 ... SET key (area-designation means)

22 ... Control part (first assessment means, photo-shooting control means, comparison means, second assessment means, frame-border indication means, shutter-speed acquisition means)

26 ... Display part (frame-border indication means)

31 ... Blur detection part (blur-detection means, second blur-detection means)

32 ... Camera-shake detection part (blur-detection means, first blur-detection means)

35 ... Photographic subject

90 ... Blur-threshold setting table (threshold-value acquisition means)

[Figure 1]

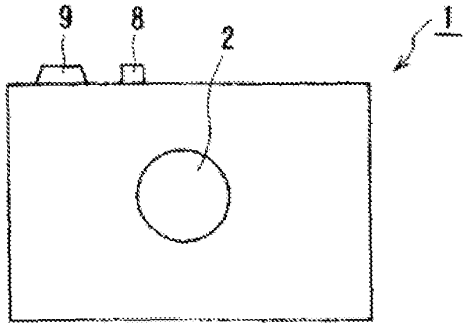

(b)

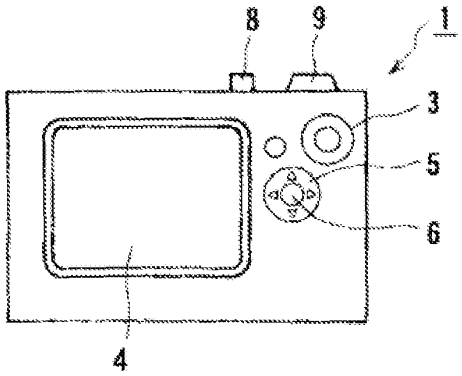

(c)

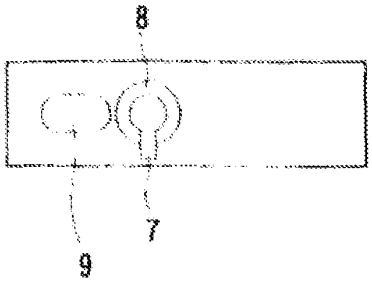

[Figure 2]

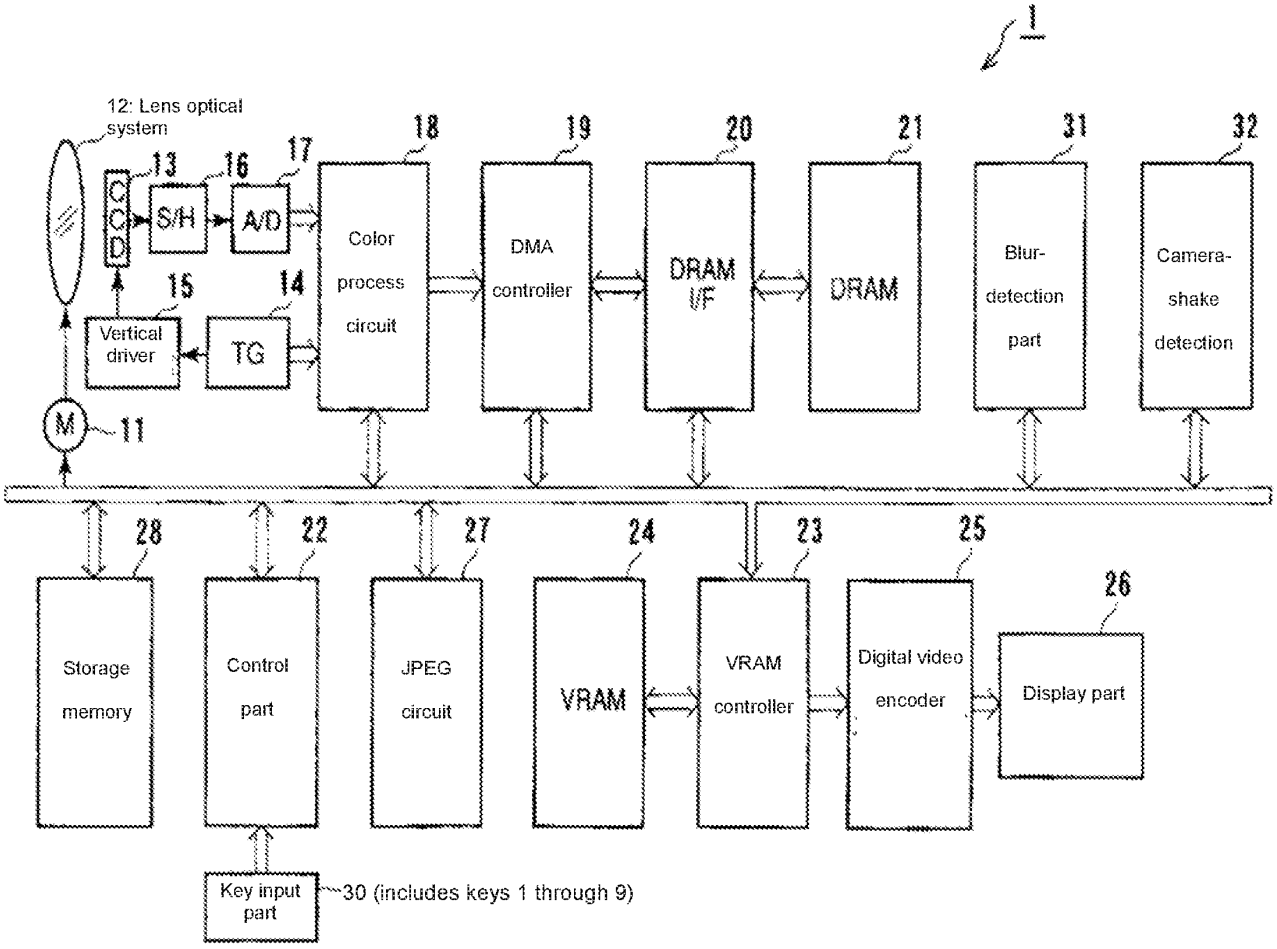
1
12: Lens optical system
CCD
13
S/H
16
A/D
17
Vertical driver
15
TG
14
M
11
Color process circuit
18
DMA controller
19
DRAM I/F
20
DRAM
21
Blur-detection part
31
Camera-shake detection
32
Storage memory
28
Control part
22
JPEG circuit
27
VRAM
24
VRAM controller
23
Digital video encoder
25
Display part
26
Key input part
30 (includes keys 1 through 9)

[Figure 3]

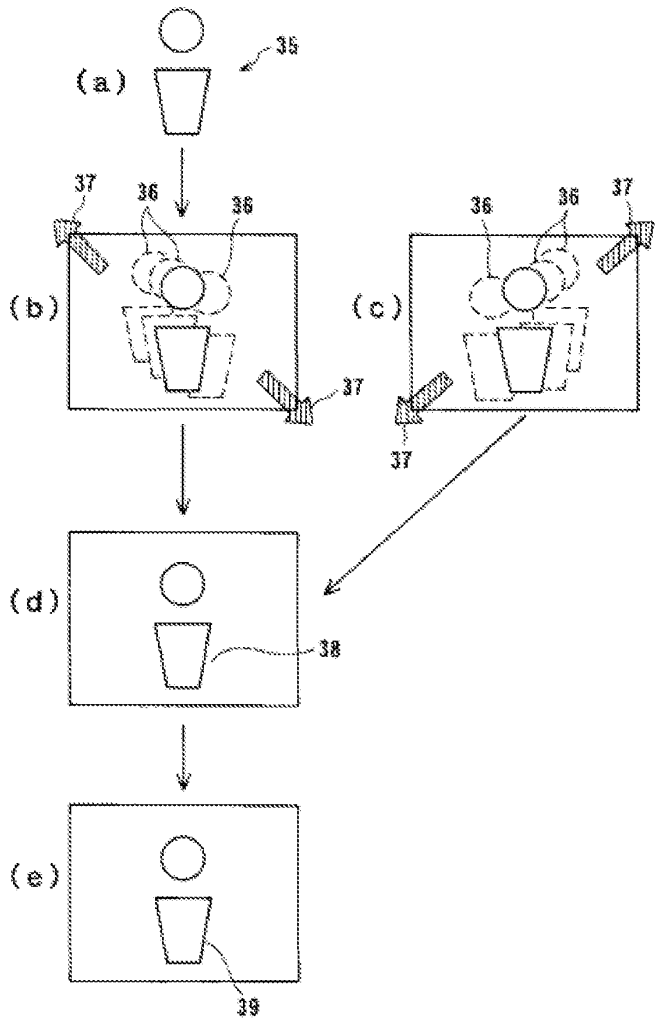

[Figure 4]

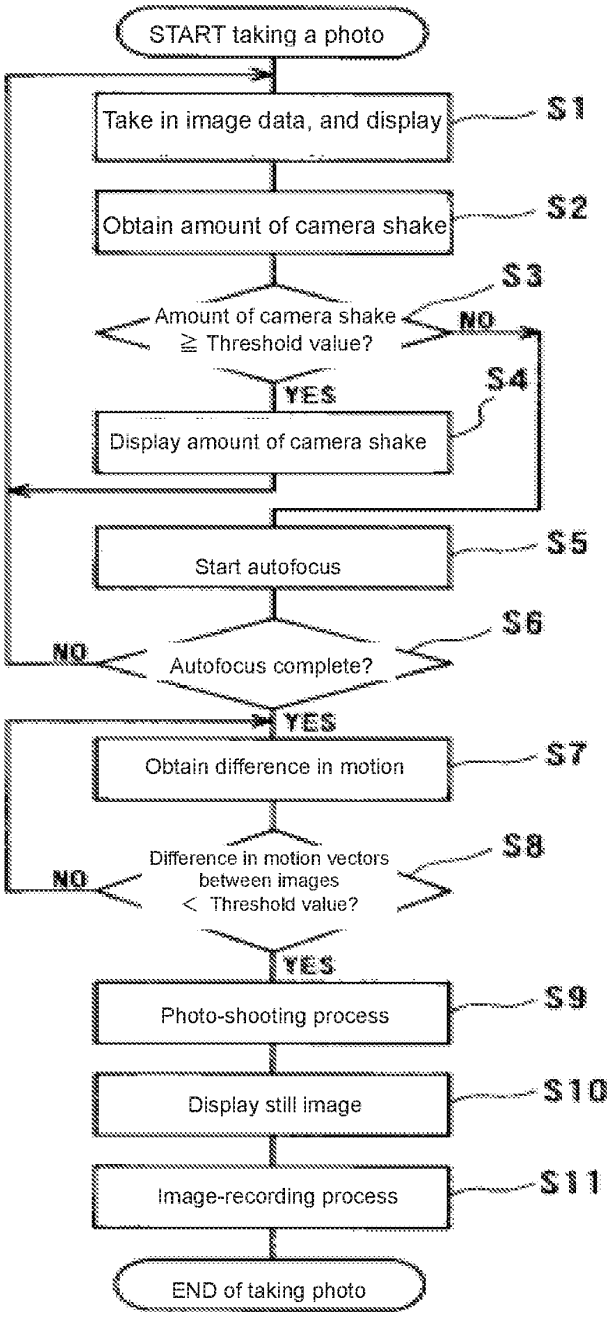
START taking a photo
Take in image data, and display
S1
Obtain amount of camera shake
S2
S3
Amount of camera shake ≧ Threshold value?
NO
YES
S4
Display amount of camera shake
Start autofocus
S5
S6
NO
Autofocus complete?
YES
Obtain difference in motion
S7
S8
Difference in motion vectors between images < Threshold value?
NO
YES
Photo-shooting process
S9
Display still image
S10
Image-recording process
S11
END of taking photo

[Figure 5]

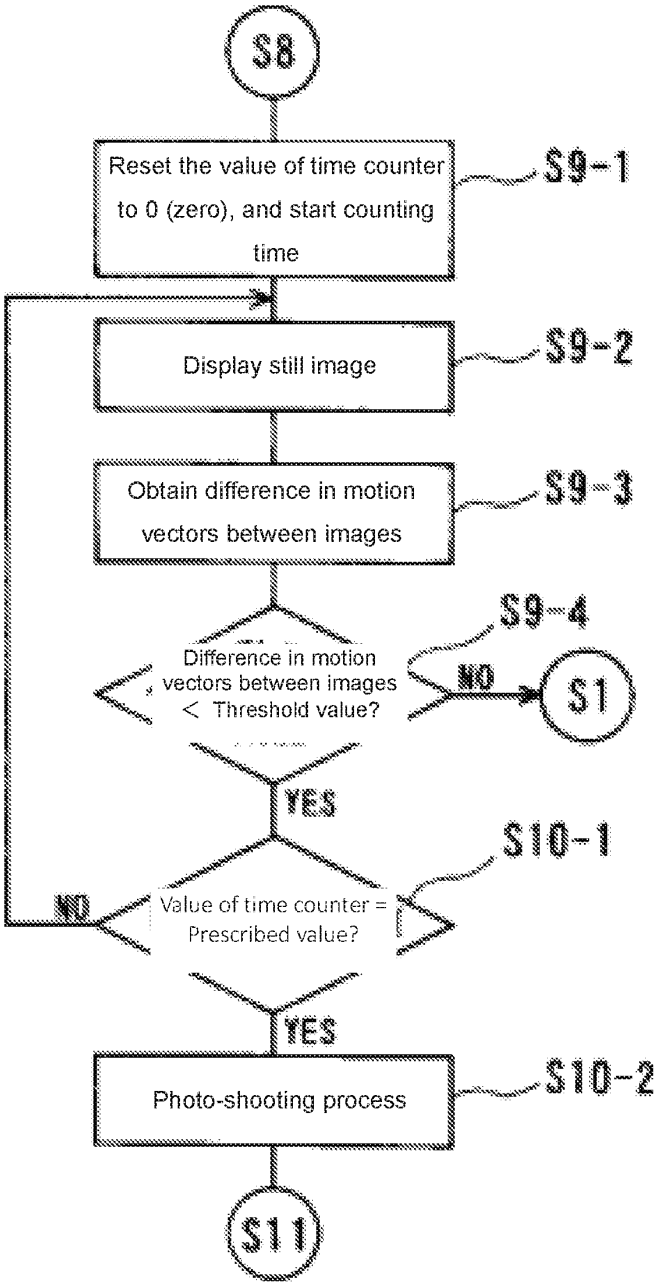
S8
Reset the value of time counter to 0 (zero), and start counting time
S9-1
Display still image
S9-2
Obtain difference in motion vectors between images
S9-3
S9-4
Difference in motion vectors between images < Threshold value?
NO
S1
YES
S10-1
NO
Value of time counter = Prescribed value?
YES
Photo-shooting process
S10-2
S11

[Figure 6]

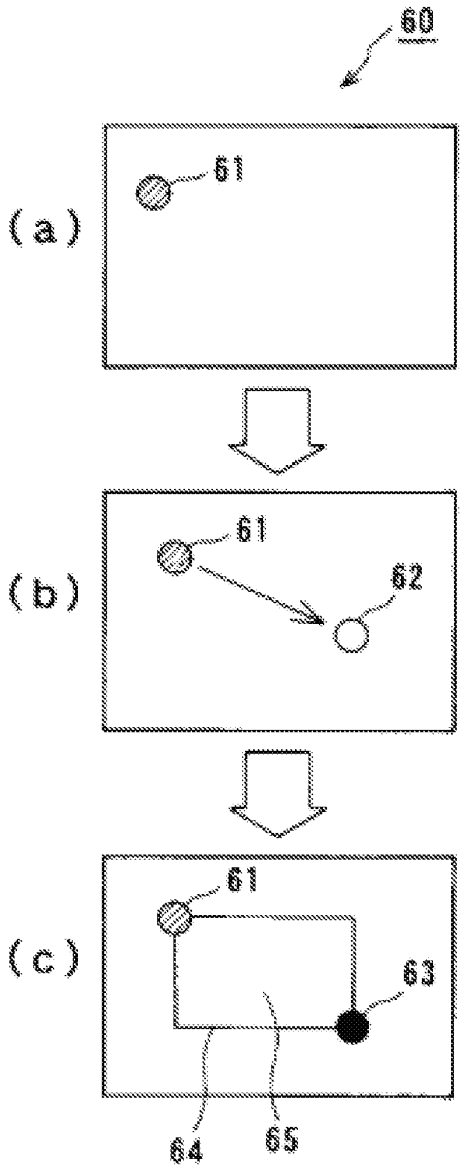

[Figure 7]

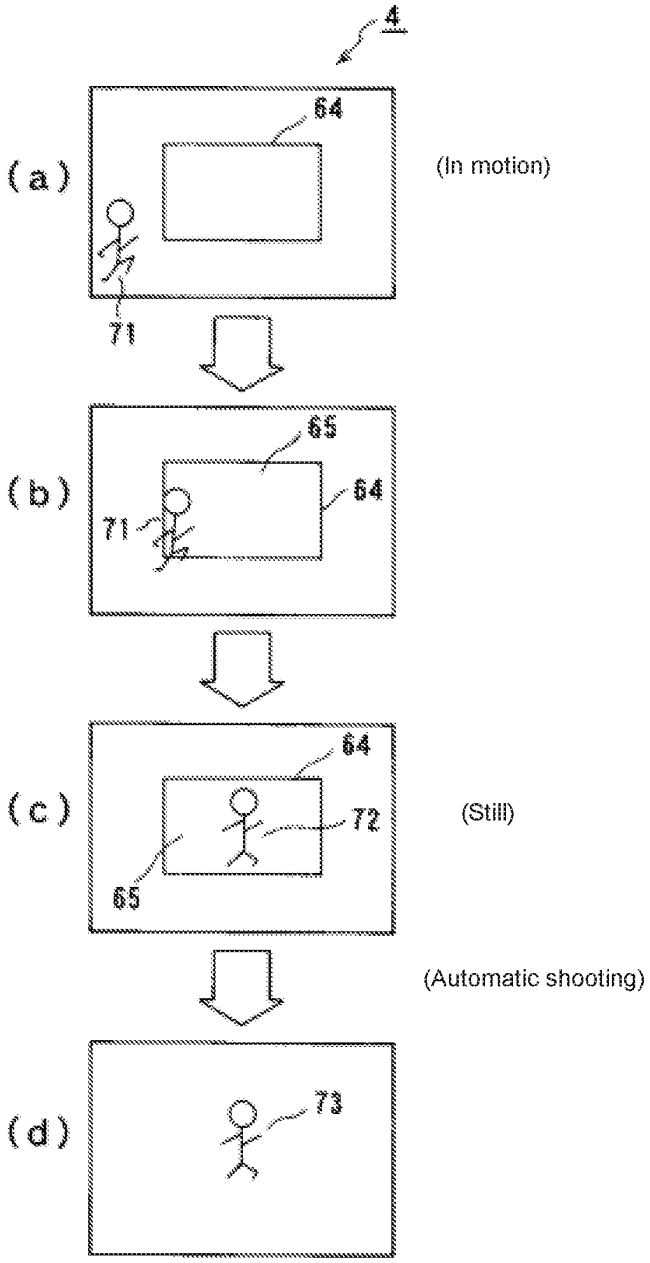
4
(a)
64
(In motion)
71
(b)
65
64
71
(c)
64
72
(Still)
65
(Automatic shooting)
(d)
73

[Figure 8]

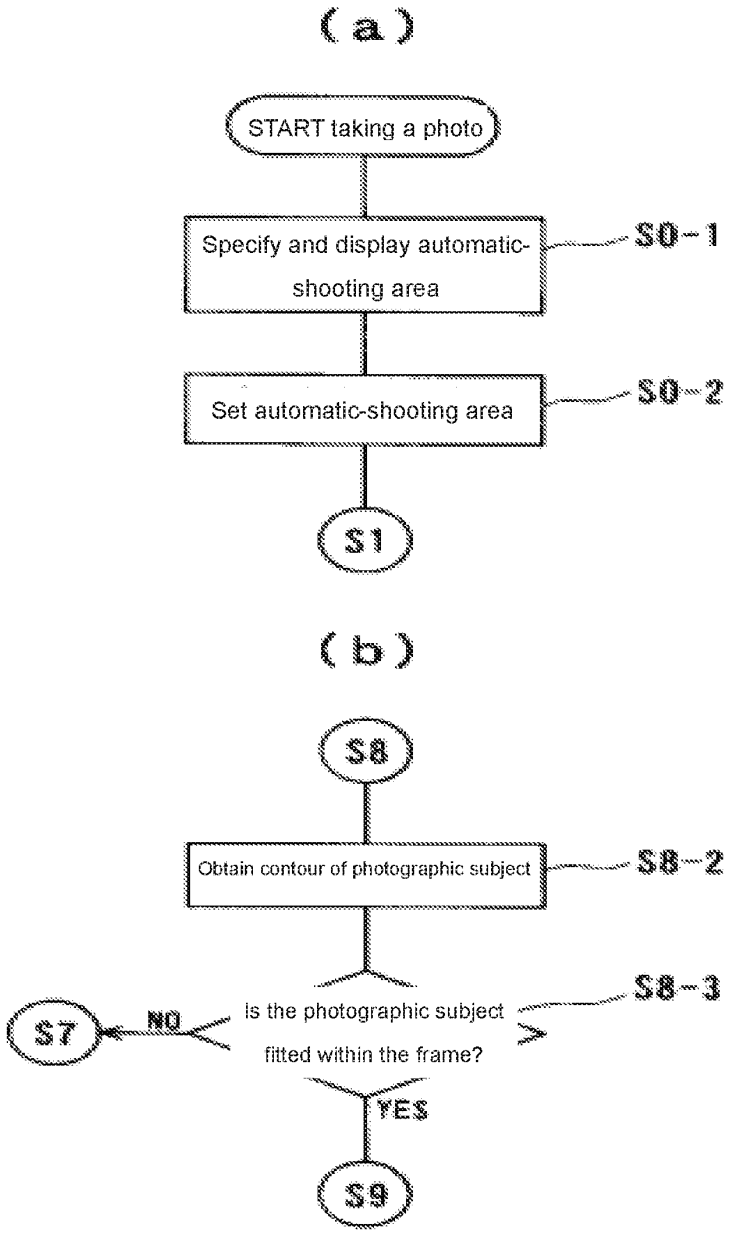
(a)
START taking a photo
Specify and display automatic-shooting area
S0-1
Set automatic-shooting area
S0-2
S1
(b)
S8
Obtain contour of photographic subject
S8-2
Is the photographic subject fitted within the frame?
S8-3
NO
S7
YES
S9

[Figure 9]

90

Shutter speed	Camera-shake threshold
t_1	r_1
t_2	r_2
⋮	⋮
t_n	r_n

$t_1 > t_2 > \cdots > > t_n$

$r_1 < r_2 < \cdots < < r_n$

[Figure 10]

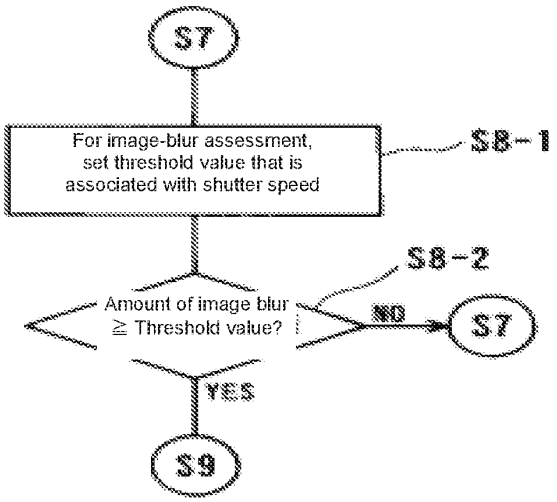

Certificate of Translation

1. I, Yukie Hirose, hereby certify that I am a professional translator, am fluent in both Japanese and English, and am competent to translate from Japanese into English.

2. I hereby certify that I prepared the foregoing translation of the patent application JP2006174105A.

3. I acknowledge that willful false statements and the like are punishable by fine and/or imprisonment.

4. All statements made herein of my own knowledge are true and all statements made on information and belief are believed to be true.

5. I declare under penalty of perjury that all statements made herein of my own knowledge are true and all statements made on information and belief are believed to be true, and further that these statements were made with the knowledge that willful false statements and the like are punishable by fine or imprisonment, or both, under 18 U.S.C. § 1001.

Executed on: 3/23/2020

Signed:

Ms. Yukie Hirose

CERTIFICATE OF EFS FILING UNDER 37 CFR §1.8

I hereby certify that this correspondence is being electronically transmitted to the United States Patent and Trademark Office, Commissioner for Patents, via the EFS pursuant to 37 CFR §1.8 on the below date:

Date: August 27, 2020 Name: Scott W. Brim (Reg. No. 51,500) Signature: /Scott W. Brim/

SUPPLEMENTAL INFORMATION DISCLOSURE STATEMENT BY APPLICANT (Not for submission under 37 CFR 1.99)		
	Application Number	16/507,595
	Filing Date	July 10, 2019
	First Named Inventor	Charles Lee Oakes
	Art Unit	3697
	Confirmation Number	4037
	Examiner Name	Daniel S. Felten
	Attorney Docket No.	US-0152.11 (14538-668)

In accordance with the duty of disclosure, Applicant(s) hereby cites the following references:

PATENT REFERENCES

EXAMINER INITIAL		DOCUMENT NUMBER Number-Kind Code (if known)	DATE	NAME
	E1	2003/0105714 A1	06/05/2003	Alarcon-Luther et al.
	E2	2004/0171371 A1	09/02/2004	Paul
	E3	2007/0183652 A1	08/09/2007	Backstrom et al.
	E4	6,178,270 B1	01/23/2001	Taylor et al.
	E5	2010/0078472 A1	04/01/2010	Lin et al.
	E6	2010/0128131 A1	05/27/2010	Tenchio et al.
	E7	8,768,038 B1	07/01/2014	Sherman et al.
	E8	10,574,879 B1	02/25/2020	Prasad et al.
	E9	10,621,559 B1	04/14/2020	Oakes, III et al.
	E10	10,621,660 B1	04/14/2020	Medina et al.
	E11	10,706,466 B1	07/07/2020	Ethington et al.

FOREIGN PATENT REFERENCES

EXAMINER INITIAL		DOCUMENT NUMBER Number-Kind Code (if known)	DATE	COUNTRY	TRANSLATION YES OR NO
	E12	JP 2006-174105 A	06/29/2006	Japan	Abstract
	E13	JP 2004-23158 A	01/22/2004	Japan	Abstract

OTHER ART – NON PATENT LITERATURE DOCUMENTS

EXAMINER INITIAL	Include name of author, title of the article (when appropriate), title of the item (book, magazine, journal, serial, symposium, catalog, etc.), date, page(s), volume-issue number(s), publisher, city and/or country where published.	

1. PRIORITY INFORMATION:

☐ This application claims priority under 35 USC §120 to the following United States patent application(s):_____. In accordance with 37 CFR §1.98(d), copies of the references cited herein which were submitted to, or cited by, the office, in compliance with 37 CFR §1.98(a)-(c) in the earlier application are not provided herewith. The Examiner is directed to those references cited in all Information

Examiner Signature		Date Considered	

Disclosure Statements filed in the priority United States patent application(s) cited above in addition to the references cited herein.

2. CERTIFICATIONS: (CHECK ALL THAT APPLY)

A. Certifications For 37 CFR §1.97(c) or 37 CFR §1.97(d):

☐ Applicant hereby certifies pursuant to 37 CFR §1.97(e)(1) that each item of information in this Information Disclosure Statement was first cited in any communication from a foreign patent office in a counterpart foreign application not more than three months prior to the filing of this Information Disclosure Statement.

☐ Applicant hereby certifies pursuant to 37 CFR §1.97(e)(2) that no item of information contained in this Information Disclosure Statement was cited in a communication from a foreign patent office in a counterpart foreign application, and, to the knowledge of the undersigned after making reasonable inquiry, no item of information contained in this Statement was known to any individual designated in 37 CFR §1.56(c), more than three months prior to the filing of this Information Disclosure Statement.

B. For Patent Term Adjustment Purposes:

☐ For purposes of 37 CFR §1.704(d)(i) or 37 CFR §1.704(d)(ii), Applicant is hereby submitting concurrently with this Information Disclosure Statement a completed Form PTO/SB/133 that certifies that each item of information contained in this Information Disclosure Statement was first cited in any communication from a patent office in a counterpart foreign or international application or from the Office or is a communication that was issued by a patent office in a counterpart foreign or international application or by the Office, and that this communication was not received by any individual designated in 37 CFR §1.56(c) more than thirty days prior to the filing of this Information Disclosure Statement.

3. FEE INFORMATION: (CHECK IF FEE REQUIRED)

☐ Applicant has calculated a processing fee in the amount of _____ to be due under 37 CFR §1.17(p) in connection with the filing of this Information Disclosure Statement. Applicant authorizes charging the fee to Deposit Account 50-4184.

☒ The Director is hereby authorized to charge any fee deficiency associated with the filing of this Information Disclosure Statement to Deposit Account 50-4184.

Pursuant to the undersigned attorney's obligation and duties under 37 CFR §§ 1.56 and 1.98(a)(3) and (c), either English language abstracts, partial translations, or full translations are included for patent documents which are not in English for the express purpose of providing a concise explanation of the references to the Patent and Trademark Office with the opportunity to evaluate the same. Applicant respectfully requests the Examiner's consideration of the above reference(s) and entry thereof into the record of this application.

By submitting this Statement, Applicant is attempting to fully comply with the duty of candor and good faith mandated by 37 CFR §1.56. As such, this Statement is not intended to constitute an admission that any of the enclosed references, or other information referred to therein, constitutes "prior art" or is otherwise "material to patentability," as that phrase is defined in 37 CFR §1.56(a).

Respectfully submitted,

August 27, 2020
Date

/Scott W. Brim/
Scott W. Brim (Reg. No. 51,500)

Examiner Signature		Date Considered	

Electronic Acknowledgement Receipt

EFS ID:	40395956
Application Number:	16507595
International Application Number:	
Confirmation Number:	4037
Title of Invention:	DIGITAL CAMERA PROCESSING SYSTEM
First Named Inventor/Applicant Name:	Charles Lee Oakes
Customer Number:	16530
Filer:	Scott Wayne Brim/Michael Agustin
Filer Authorized By:	Scott Wayne Brim
Attorney Docket Number:	US-0152.11(14538-668)
Receipt Date:	27-AUG-2020
Filing Date:	10-JUL-2019
Time Stamp:	12:02:05
Application Type:	Utility under 35 USC 111(a)

Payment information:

Submitted with Payment	no

File Listing:

Document Number	Document Description	File Name	File Size(Bytes)/ Message Digest	Multi Part /.zip	Pages (if appl.)
1	Transmittal Letter	14538-668_Transmittal.pdf	81564 b690509e292817cb2a4e241b176b3dad52a28e2e	no	1

Warnings:

Information:					
2	Information Disclosure Statement (IDS) Form (SB08)	14538-668_IDS.pdf	130186 c2275c3ea8056f7d3cfc2fd7cac9a939ef7c5b73	no	2
Warnings:					
Information:					
This is not an USPTO supplied IDS fillable form					
3	Foreign Reference	JP2004023158A-cc.pdf	3166529 13dc72797826ce203ebf4dde0ceb4d972e1d9b10	no	62
Warnings:					
Information:					
4	Foreign Reference	JP2006174105A-cc.pdf	1270113 de6f3ee09a8fce6f0bf53970ea257eadf4b1b7e0	no	52
Warnings:					
Information:					
			Total Files Size (in bytes):	4648392	

This Acknowledgement Receipt evidences receipt on the noted date by the USPTO of the indicated documents, characterized by the applicant, and including page counts, where applicable. It serves as evidence of receipt similar to a Post Card, as described in MPEP 503.

<u>New Applications Under 35 U.S.C. 111</u>
If a new application is being filed and the application includes the necessary components for a filing date (see 37 CFR 1.53(b)-(d) and MPEP 506), a Filing Receipt (37 CFR 1.54) will be issued in due course and the date shown on this Acknowledgement Receipt will establish the filing date of the application.
<u>National Stage of an International Application under 35 U.S.C. 371</u>
If a timely submission to enter the national stage of an international application is compliant with the conditions of 35 U.S.C. 371 and other applicable requirements a Form PCT/DO/EO/903 indicating acceptance of the application as a national stage submission under 35 U.S.C. 371 will be issued in addition to the Filing Receipt, in due course.
<u>New International Application Filed with the USPTO as a Receiving Office</u>
If a new international application is being filed and the international application includes the necessary components for an international filing date (see PCT Article 11 and MPEP 1810), a Notification of the International Application Number and of the International Filing Date (Form PCT/RO/105) will be issued in due course, subject to prescriptions concerning national security, and the date shown on this Acknowledgement Receipt will establish the international filing date of the application.

CERTIFICATE OF EFS FILING UNDER 37 CFR §1.8

I hereby certify that this correspondence is being electronically transmitted to the United States Patent and Trademark Office, Commissioner for Patents, via the EFS pursuant to 37 CFR §1.8 on the below date:

Date: August 27, 2020 Name: Scott W. Brim (Reg. No. 51,500) Signature: /Scott W. Brim/

IN THE UNITED STATES PATENT AND TRADEMARK OFFICE

In re Appln. of:	Charles Lee Oakes		
Appln. No.:	16/507,595	Examiner:	Jung I. Liu
Filed:	July 10, 2019	Art Unit:	3697
For:	DIGITAL CAMERA PROCESSING SYSTEM	Conf. No.:	4037
Attorney Docket No.:	US-0152.11(14538-668)		

TRANSMITTAL

Commissioner for Patents
PO Box 1450
Alexandria, VA 22313-1450

Sir:

Attached is/are:

☒ Information Disclosure Statement.

Fee calculation:

☒ No additional fee is required.

☐ Per 37 CFR §1.27, ☐ Applicant is small entity ☐ Applicant is micro entity.

☐ An extension fee in an amount of $_____ for a _____-month extension of time under 37 CFR § 1.136(a).

☐ A petition or processing fee in an amount of $_____ under 37 CFR § 1.1_____(_____).

☐ An additional filing fee has been calculated as shown below:

					Fee		Small Entity Fee		Micro Entity Fee	
	Claims Remaining After Amendment		Highest No. Previously Paid	Present Extra	Rate	Add'l Fee	Rate	Add'l Fee	Rate	Add'l Fee
Total		Minus			x $100 =	$	x $ 50 =	$	x $25 =	$
Independent		Minus			x $460 =	$	x $230 =	$	x $115 =	$
First Presentation of Multiple Dep. Claim					+ $820 =	$	+ $410 =	$	+ $205 =	$
					Total	$	Total	$	Total	$

Fee payment:

☒ The Director is hereby authorized to charge payment of any additional filing fees required under 37 CFR § 1.16 and any patent application processing fees under 37 CFR § 1.17 (including any extension fee required to ensure that this paper is timely filed), or to credit any overpayment, to Deposit Account No. 23-1925.

Respectfully submitted,

August 27, 2020
Date

/Scott W. Brim/
Scott W. Brim (Reg. No. 51,500)

BRINKS GILSON & LIONE
NBC Tower – Suite 3600, 455 N. Cityfront Plaza Drive, Chicago, IL 60611-5599

CERTIFICATE OF EFS FILING UNDER 37 CFR §1.8

I hereby certify that this correspondence is being electronically transmitted to the United States Patent and Trademark Office, Commissioner for Patents, via the EFS pursuant to 37 CFR §1.8 on the below date:

Date: December 23, 2019 Name: Patricia Chiovari Signature: /Patricia Chiovari/

BRINKS GILSON & LIONE 100 YEARS OF IP LAW

SUPPLEMENTAL INFORMATION DISCLOSURE STATEMENT BY APPLICANT (Not for submission under 37 CFR 1.99)		
	Application Number	16/507,595
	Filing Date	July 10, 2019
	First Named Inventor	Charles Lee Oakes
	Art Unit	3693
	Confirmation Number	4627
	Examiner Name	Gerald O'Connor
	Attorney Docket No.	US-0152.11| 14538-668

In accordance with the duty of disclosure, Applicant(s) hereby cites the following references:

PATENT REFERENCES

EXAMINER INITIAL		DOCUMENT NUMBER Number-Kind Code (if known)	DATE	NAME
	D1	US 2003/0177448 A1	09/18/2003	Levine et al.
	D2	US 6,922,487 B2	07/26/2005	Dance et al.
	D3	US 7,207,478 B1	04/24/2007	Blackson et al.
	D4	US 7,987,231 B2	07/26/2011	Karkanias

FOREIGN PATENT REFERENCES

EXAMINER INITIAL		DOCUMENT NUMBER Number-Kind Code (if known)	DATE	COUNTRY	TRANSLATION YES OR NO

OTHER ART – NON PATENT LITERATURE DOCUMENTS

EXAMINER INITIAL	Include name of author, title of the article (when appropriate), title of the item (book, magazine, journal, serial, symposium, catalog, etc.), date, page(s), volume-issue number(s), publisher, city and/or country where published.	
	D5	Herley, Cormac, "Recursive Method To Extract Rectangular Objects From Scans", *Microsoft Research*, October 2003, 4 pgs.
	D6	Panini My Vision X Operator Manual, Panini, 2004, (cited in IPR2020-00093, US Patent No. 9,892,454), 51 pgs.
	D7	Yeo, L.H. et al., "Submission of transaction from mobile workstations in a cooperative multidatabase environment", *IEEE*, 1994, (cited in IPR2020-00097, US Patent No. 7,885,880), 10 pgs.

1. PRIORITY INFORMATION:

☐ This application claims priority under 35 USC §120 to the following United States patent application(s):_____. In accordance with 37 CFR §1.98(d), copies of the references cited herein which were submitted to, or cited by, the office, in compliance with 37 CFR §1.98(a)-(c) in the earlier application are not provided herewith. The Examiner is directed to those references cited in all Information Disclosure Statements filed in the priority United States patent application(s) cited above in addition to the references cited herein.

Examiner Signature		Date Considered	

2. CERTIFICATIONS: (CHECK ALL THAT APPLY)

A. Certifications For 37 CFR §1.97(c) or 37 CFR §1.97(d):

☐ Applicant hereby certifies pursuant to 37 CFR §1.97(e)(1) that each item of information in this Information Disclosure Statement was first cited in any communication from a foreign patent office in a counterpart foreign application not more than three months prior to the filing of this Information Disclosure Statement.

☐ Applicant hereby certifies pursuant to 37 CFR §1.97(e)(2) that no item of information contained in this Information Disclosure Statement was cited in a communication from a foreign patent office in a counterpart foreign application, and, to the knowledge of the undersigned after making reasonable inquiry, no item of information contained in this Statement was known to any individual designated in 37 CFR §1.56(c), more than three months prior to the filing of this Information Disclosure Statement.

B. For Patent Term Adjustment Purposes:

☐ For purposes of 37 CFR §1.704(d)(i) or 37 CFR §1.704(d)(ii), Applicant is hereby submitting concurrently with this Information Disclosure Statement a completed Form PTO/SB/133 that certifies that each item of information contained in this Information Disclosure Statement was first cited in any communication from a patent office in a counterpart foreign or international application or from the Office or is a communication that was issued by a patent office in a counterpart foreign or international application or by the Office, and that this communication was not received by any individual designated in 37 CFR §1.56(c) more than thirty days prior to the filing of this Information Disclosure Statement.

3. FEE INFORMATION: (CHECK IF FEE REQUIRED)

☐ Applicant has calculated a processing fee in the amount of _____ to be due under 37 CFR §1.17(p) in connection with the filing of this Information Disclosure Statement. Applicant authorizes charging the fee to Deposit Account 50-4184.

☐ The Director is hereby authorized to charge any fee deficiency associated with the filing of this Information Disclosure Statement to Deposit Account 50-4184.

Pursuant to the undersigned attorney's obligation and duties under 37 CFR §§ 1.56 and 1.98(a)(3) and (c), either English language abstracts, partial translations, or full translations are included for patent documents which are not in English for the express purpose of providing a concise explanation of the references to the Patent and Trademark Office with the opportunity to evaluate the same. Applicant respectfully requests the Examiner's consideration of the above reference(s) and entry thereof into the record of this application.

By submitting this Statement, Applicant is attempting to fully comply with the duty of candor and good faith mandated by 37 CFR §1.56. As such, this Statement is not intended to constitute an admission that any of the enclosed references, or other information referred to therein, constitutes "prior art" or is otherwise "material to patentability," as that phrase is defined in 37 CFR §1.56(a).

Respectfully submitted,

December 23, 2019
Date

Kent E. Genin (Reg. No. 37,834)

Examiner Signature		Date Considered	

Electronic Acknowledgement Receipt

EFS ID:	38119074
Application Number:	16507595
International Application Number:	
Confirmation Number:	4037
Title of Invention:	DIGITAL CAMERA PROCESSING SYSTEM
First Named Inventor/Applicant Name:	Charles Lee Oakes
Customer Number:	16530
Filer:	Kent E. Genin/Juan Garibay
Filer Authorized By:	Kent E. Genin
Attorney Docket Number:	US-0152.11(14538-668)
Receipt Date:	23-DEC-2019
Filing Date:	10-JUL-2019
Time Stamp:	13:15:03
Application Type:	Utility under 35 USC 111(a)

Payment information:

Submitted with Payment	no

File Listing:

Document Number	Document Description	File Name	File Size(Bytes)/ Message Digest	Multi Part /.zip	Pages (if appl.)
1		14538_668_IDS_D_122319.pdf	442272 af3541059bcc68a55627a1760e4d127507d03041	yes	3

	Multipart Description/PDF files in .zip description		
	Document Description	**Start**	**End**
	Miscellaneous Incoming Letter	1	1
	Information Disclosure Statement (IDS) Form (SB08)	2	3

Warnings:					
Information:					
2	Non Patent Literature	Herley-RecursiveMethodExtract-c.pdf	588798 44086db81e70d4dfac3c2422716df3e80fec05a2	no	4
Warnings:					
Information:					
3	Non Patent Literature	PaniniMyVisionManual.pdf	2182635 0853186ee44ce44b8832243306dab7307cea82ab	no	51
Warnings:					
Information:					
4	Non Patent Literature	Yeo-SubmissionTransactions-c.pdf	2247440 7fb87cf7f7eaaf61a90f8eaa303df9f2c1285cb6	no	10
Warnings:					
Information:					
		Total Files Size (in bytes):	5461145		

This Acknowledgement Receipt evidences receipt on the noted date by the USPTO of the indicated documents, characterized by the applicant, and including page counts, where applicable. It serves as evidence of receipt similar to a Post Card, as described in MPEP 503.

New Applications Under 35 U.S.C. 111
If a new application is being filed and the application includes the necessary components for a filing date (see 37 CFR 1.53(b)-(d) and MPEP 506), a Filing Receipt (37 CFR 1.54) will be issued in due course and the date shown on this Acknowledgement Receipt will establish the filing date of the application.
National Stage of an International Application under 35 U.S.C. 371
If a timely submission to enter the national stage of an international application is compliant with the conditions of 35 U.S.C. 371 and other applicable requirements a Form PCT/DO/EO/903 indicating acceptance of the application as a national stage submission under 35 U.S.C. 371 will be issued in addition to the Filing Receipt, in due course.
New International Application Filed with the USPTO as a Receiving Office
If a new international application is being filed and the international application includes the necessary components for an international filing date (see PCT Article 11 and MPEP 1810), a Notification of the International Application Number and of the International Filing Date (Form PCT/RO/105) will be issued in due course, subject to prescriptions concerning national security, and the date shown on this Acknowledgement Receipt will establish the international filing date of the application.

CERTIFICATE OF EFS FILING UNDER 37 CFR §1.8

I hereby certify that this correspondence is being electronically transmitted to the United States Patent and Trademark Office, Commissioner for Patents, via the EFS pursuant to 37 CFR §1.8 on the below date:

Date: December 23, 2019 Name: Patricia Chiovari Signature: /Patricia Chiovari/

BRINKS GILSON & LIONE 100 YEARS OF IP LAW

IN THE UNITED STATES PATENT AND TRADEMARK OFFICE

In re Appln. of:	Charles Lee Oakes et al.		
Appln. No.:	16/507,595	Examiner:	I. Jung Liu
Filed:	July 10, 2019	Art Unit:	3697
For:	DIGITAL CAMERA PROCESSING SYSTEM	Conf. No.:	4037
Attorney Docket No.:	US-0152.11 | 14538-668		

TRANSMITTAL

Commissioner for Patents
PO Box 1450
Alexandria, VA 22313-1450

Sir:

Attached is/are:

☒ Supplemental Information Disclosure Statement; and References D5-D7.

Fee calculation:

☒ No additional fee is required.

☐ Per 37 CFR §1.27, ☐ Applicant is small entity ☐ Applicant is micro entity.

☐ An extension fee in an amount of $___ for a __-month extension of time under 37 CFR § 1.136(a).

☐ A petition or processing fee in an amount of $_____ under 37 CFR § 1.1_____(_____).

☐ An additional filing fee has been calculated as shown below:

					Fee		Small Entity Fee		Micro Entity Fee	
	Claims Remaining After Amendment		Highest No. Previously Paid	Present Extra	Rate	Add'l Fee	Rate	Add'l Fee	Rate	Add'l Fee
Total		Minus			x $100 =	$	x $ 50 =	$	x $25 =	$
Independent		Minus			x $460 =	$	x $230 =	$	x $115 =	$
First Presentation of Multiple Dep. Claim					+ $820 =	$	+ $410 =	$	+ $205 =	$
					Total	$	Total	$	Total	$

Fee payment:

☐ Please charge Deposit Account No. 50-4184 in the amount of $_____ for _____.

☐ Payment by credit card in the amount of $_____ (Form PTO-2038 is attached).
WARNING: Information on this form may become public. **Credit card information should not be included on this form.**

☐ The Director is hereby authorized to charge payment of any additional filing fees required under 37 CFR § 1.16 and any patent application processing fees under 37 CFR § 1.17 (including any extension fee required to ensure that this paper is timely filed), or to credit any overpayment, to Deposit Account No. 50-4184.

Respectfully submitted,

December 23, 2019
Date

Kent E. Genin (Reg. No. 37,834)

BRINKS GILSON & LIONE
NBC Tower – Suite 3600, 455 N. Cityfront Plaza Drive, Chicago, IL 60611-5599

Print | Close

Patent Record Full View Friday, August 30 2019 **Derwent Innovation**

Patent/Publication: CN1897644A

Key Summary Data

Patent: Alive

DWPI Family: Alive

INPADOC Family: Alive

Original Assignee: Motorola Inc., US

Optimized Assignee: MOTOROLA MOBILE CO. LTD.

Ultimate Parent: MOTOROLA MOBILE CO. LTD.

Publication Date: 2007-01-17

Expiration Date: 2025-07-15 (estimated)

Remaining Life: 2146 days (5 year(s), 10 month(s))

Bibliography

DWPI Title

Method and system for catching pictures to reduce the projection distortion comprises the image sensor of camera receives the preview image that describes the edge of straight line and having at least two reference lines

Original Title

The method and the system for the image catching *(Translation from Clarivate Analytics)*

English Title

Method and system for catching pictures

Assignee/Applicant

Standardized: **MOTOROLA CORP**

Original: Motorola Inc., US

DWPI Assignee/Applicant

MOTOROLA CORP (MOTI-C); MOTOROLA INC (MOTI-C)

Inventor

LUO Xi-ping, PENG Gang, ZHEN Li-xin,

DWPI Inventor

LUO X; PENG G; ZHEN L

Publication Date (Kind Code)

2007-01-17 (A)

DWPI Accession / Update

2007-728008 / 200769

Application Number / Date

CN200510081992A / 2005-07-15

Priority Number / Date / Country Code

CN200510081992A / 2005-07-15 / CN

Abstract

DWPI Abstract

(CN1897644A_)

Novelty

The method is used to reduce the projection distortion in the image and comprises: the image sensor of camera receives the preview image that describes the edge of straight line; the image describingthe edge of straight line and having at least two reference lines is displayed in the preview window of the camera; each reference line corresponds to an edge of straight line; the camera captures theimage, only in case of the edge of straight line being parallel with the reference line.

Abstract

A kind of method system for catching the stuff front face image with at least two basic upside straight margins(205), it is helpful for the reducing projection transformation in the image. This method comprises at the camera(100) image sensor receive the preview image, wherein, the preview image described the straight line margin(205). And then described the straight line margin(205) and the existing preview image of at least two benchmark line(135) displayed at the preview windows(125) relative with the camera system(100), wherein, each reference line (135) is corresponding to a straight line margin(205). Only when the straight line margin(205) displayed at the preview windows(125) is basically parallel with the relative benchmark line(135), it catch the image of the stuff.

(Translation from Clarivate Analytics)

Classes/Indexing

IPC

Current IPC	Invention	Version	Additional	Version

Full	H04N 5/225	20060101	-	-
Main Group	-	-	-	-
Subclass	-	-	-	-

Original IPC	Invention	Version	Additional	Version
Advanced/Full	H04N 5/225	20060101	-	-
Core/Main Group	-	-	-	-
Subclass	-	-	-	-

DWPI Class

W04

DWPI Manual Codes

Expand DWPI Manual Codes

DWPI Chemistry Resource Numbers

Expand DWPI Chemistry Resource Numbers

DWPI Registry Numbers

Expand DWPI Registry Numbers

Plasdoc Punch Codes

Expand Plasdoc Punch Codes

Plasdoc Key Serial Codes

Expand Plasdoc Key Serial Codes

Enhanced Polymer Indexing

Expand Enhanced Polymer Indexing

Chemical Fragment Codes

Expand Chemical Fragment Codes

Legal Status

INPADOC Legal Status

Gazette Date	Code	Description
2016-04-06	C56	CHANGE IN THE NAME OR ADDRESS OF THE PATENTEE
2016-04-06	C41	TRANSFER OF PATENT APPLICATION OR PATENT RIGHT OR UTILITY MODEL
2011-03-09	C41	TRANSFER OF PATENT APPLICATION OR PATENT RIGHT OR UTILITY MODEL
2011-03-09	ASS	SUCCESSION OR ASSIGNMENT OF PATENT RIGHT MOTOROLA MOBILE CO., LTD FORMER OWNER: MOTOROLA INC. 2011-01-17
2010-05-12	C14 +	GRANT OF PATENT OR UTILITY MODEL
2007-03-14	C10	ENTRY INTO SUBSTANTIVE EXAMINATION
2007-01-17	C06 +	PUBLICATION

Get Family Legal Status

Family

Family

Expand INPADOC Family (2) **INPADOC Family:** Alive

Expand DWPI Family (2); Countries/Regions (1) **DWPI Family:** Alive

Claims

Claims

All Claims (14)

Claims (English)

1. A kind of method system for catching the stuff front face image with at least two basic upside straight margins, this method comprises: At the camera image sensor receive the preview image, wherein, the preview image described the straight line margin; And then described the straight line margin and the existing preview image of at least two benchmark linedisplayed at the preview windows relative with the camera system, wherein, each reference line is corresponding to a straight line margin; and Only when the straight line margin displayed at the preview windows is basically parallel with the relative benchmark line, it catches the image of the stuff.

2. The method according to the claims1, wherein, there is at least three benchmark line displayed in the aforementioned preview windows.

3. The method according to the claims1, wherein, when the straight line margin displayed at the preview windows is basically parallel with the relative benchmark line, it catch the image of the stuff.

4. The method according to the claims1, wherein, Only when the straight line margin displayed at the preview windows is basically has same length, and when each straight line margin is basically parallel with the relative benchmark line, it catch the image of the stuff.

5. The method according to the claims1, also comprises: before catching the stuff image, when the straight line margin displayed at the preview windows is basically parallel with the relative benchmark line, provide the instruction for the clients.

6. The method according to the claims1, also comprises: operate the optic bit identification to the caught stuff image.

7. The method according to the claims1, wherein, the aforementioned benchmark line is permanently printed on the aforementioned preview windows.

8. A kind of camera system for catching the stuff front face image with at least two basic upside straight margin, the camera comprises: The image sensor, for receiving the preview image described the straight line margin; and the preview windows is connected with the aforementioned image sensor, and apply for the display the aforementioned preview image, the aforementioned preview image described the straight line margin and existing at least two benchmark line wherein, each benchmark line is corresponding to a straight line margin. Wherein, only when the straight line margin displayed at the preview windows is basically parallel with the relative benchmark line, it catches the image of the stuff.

9. The system according to the claims1, wherein, there is at least three benchmark line displayed in the aforementioned preview windows.

10. The system according to the claims8, wherein, when the aforementioned straight line margin displayed at the preview windows is basically parallel with the relative benchmark line, it catch the image of the stuff.

11. The system according to the claims8, wherein, when the aforementioned straight line margin displayed at the preview windows is basically parallel with the relative benchmark line, it catch the image of the stuff.

12. The system a according to the claims8, wherein, Only when the straight line margin displayed at the preview windows is basically has same length, and when each straight line margin is basically parallel with the relative benchmark line, it catch the image of the stuff.

13. The system a according to the claims11, wherein, the aforementioned stuff is name card, and the aforementioned instruction comprises: sound generator, ray or the instructor displayed on the aforementioned windows.

14. The system a according to the claims11, wherein, the aforementioned benchmark line is permanently printed on the aforementioned preview windows.

(Translation from Clarivate Analytics)

Description

Background/ Summary

Expand Background/Summary

Drawing Description

Expand Drawing Description

Description

Expand Description

Citations

Citation *Record level*

Expand Citing Patents (3)

Expand Cited Patents (3)

Cited Non-patents (0)

DPCI Citation *Patent family level*

Expand DPCI Citing Patents (3)

Expand DPCI Cited Patents (3)

DPCI Cited Non-patents (0)

Expand DPCI Citation Counts

DPCI Field of Search

-

DPCI Citing Patents Country/Region

CN

DPCI Cited Patents Country/Region

JP; US

Other

Attorney / Agent

China Sinda Intellectual Property Limited, CN,

HUANG Qi-ming, CN,

XIE Li-na, CN

DWPI Title Terms

METHOD SYSTEM CATCH PICTURE REDUCE PROJECT DISTORT COMPRISE IMAGE SENSE CAMERA RECEIVE PREVIEW DESCRIBE EDGE STRAIGHT LINE TWO REFERENCE

DWPI Related Accession Numbers

-

Copyright 2007-2019 CLARIVATE ANALYTICS

[19] 中华人民共和国国家知识产权局

[51] Int. Cl.
H04N 5/225 (2006.01)

[12] 发明专利申请公布说明书

[21] 申请号 200510081992.6

[43] 公开日 2007 年 1 月 17 日

[11] 公开号 CN 1897644A

[22] 申请日 2005.7.15

[21] 申请号 200510081992.6

[71] 申请人 摩托罗拉公司

地址 美国伊利诺斯州

[72] 发明人 罗希平 彭 刚 镇立新

[74] 专利代理机构 中原信达知识产权代理有限责任公司

代理人 黄启行 谢丽娜

权利要求书 2 页 说明书 8 页 附图 4 页

[54] 发明名称

用于捕捉图像的方法和系统

[57] 摘要

一种用于捕捉至少具有两条基本上直的边缘(205)的物体正面图像的方法系统，有助于减少图像中的射影变形。该方法包括在相机(100)的图像传感器(115)上接收预览图像，其中该预览图像描绘了直线边缘(205)。随后描绘了直线边缘(205)和同时存在的至少两条基准线(135)的预览图像显示在与相机系统(100)相关的预览视窗(125)中，其中每条参考线(135)对应于一条直线边缘(205)。仅仅当预览视窗(125)中所显示的直线边缘(205)基本上平行于相应的基准线(135)时，才捕捉物体的图像。

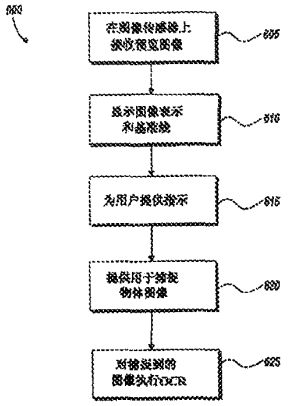

1. 一种用于捕捉至少具有两条基本上直的边缘的物体正面图像的方法，该方法包括：

在照相机的图像传感器上接收预览图像，所述预览图像描绘了直线边缘；

在与照相机相关的预览视窗中显示预览图像的表示，所述预览图像描绘了直线边缘和同时存在的至少两条基准线，其中每一条基准线对应于一条直线边缘；及

仅仅当预览视窗中所显示的直线边缘基本上平行于相应的基准线时，才提供用于捕捉物体图像。

2. 根据权利要求 1 所述的方法，其中至少有三条基准线显示在所述预览视窗中。

3. 根据权利要求 1 所述的方法，其中，当所述预览视窗中所显示的直线边缘基本上平行于相应的基准线时，自动地捕捉图像。

4. 根据权利要求 1 所述的方法，其中，仅仅当所述预览视窗中所显示的平行直线边缘基本上具有相同的长度，并且每条直线边缘基本上平行于相应的基准线时，才捕捉图像。

5. 根据权利要求 1 所述的方法，进一步包括：在捕捉物体图像前，当预览视窗中所显示的直线边缘基本上平行于相应的基准线时，为用户提供指示。

6. 根据权利要求 1 所述的方法，进一步包括对捕捉到的物体图像执行光学字符识别。

7. 根据权利要求 1 所述的方法，其中，所述基准线被永久地叠印

在所述预览视窗上。

8. 一种用于捕捉物体正面图像的照相机系统，所述物体具有至少两条基本上平行的直线边缘，该照相机系统包括：

图像传感器，适合于接收描绘了直线边缘的预览图像；及

预览视窗，可操作地连接到所述图像传感器，并且适合于显示所述预览图像的表示，所述预览图像描绘了直线边缘和同时存在的至少两条基准线，其中每条基准线对应于一条直线边缘；

其中，仅仅当所述预览视窗中所显示的直线边缘基本上平行于相应的基准线时，才能捕捉物体图像。

9. 根据权利要求 8 所述的系统，其中至少有三条基准线显示在所述预览视窗中。

10. 根据权利要求 8 所述的系统，其中，当所述预览视窗中所显示的直线边缘基本上平行于相应的基准线时，自动地捕捉图像。

11. 根据权利要求 8 所述的系统，其中，在捕捉物体图像前，当所述预览视窗中所显示的直线边缘基本上平行于相应的基准线时，为用户提供指示。

12. 根据权利要求 8 所述的系统，其中，仅仅当所述预览视窗中所显示的平行直线边缘基本上具有相同的长度，并且每一条直线边缘基本上平行于相应的基准线时，才能捕捉物体的图像。

13. 根据权利要求 11 所述的系统，其中，所述物体是名片，并且所述指示包括声音发生器、光线或显示在所述预览视窗上的指示器。

14. 根据权利要求 8 所述的系统，其中所述基准线被永久地叠印在所述预览视窗上。

用于捕捉图像的方法和系统

技术领域

本发明总体上涉及使用数码相机来捕捉图像的方法和系统。尤其（但非排他地）涉及一种捕捉例如名片等文档的图像的方法和系统。

背景技术

增强的小型化数码相机技术导致了数码相机在各种手持电子装置中广泛使用。例如，现今数码相机通常结合到移动电话、个人数字助理（PDA）以及膝上型电脑中。数码相机的这种普遍存在的可用性产生了许多新颖的用于数字图像的商业应用。例如，商业人员能够使用结合到移动电话中的数码相机来快速、便利地捕捉名片中的数字图像。然后，对名片的数字图像执行光学字符识别（OCR），并将印刷在名片上的姓名、地址及其它信息自动存储在电话的联系文件（contact file）中。

OCR 可定义为将文本图像数据转换成字符代码格式的处理过程，所述字符代码格式例如文字处理应用软件可读取的 ASCII 码。在原始的文本图像数据中，文本字符和例如图形或线条的其它类型的图像数据一样是由各个像素组成。在转换为字符代码格式后，文本字符的原始图像常常不再可用来对转换结果进行编辑和纠错。因此，为了将图像转换成特殊的字符代码，OCR 处理过程需要质量相当高的单个字符图像。

然而，现在使用数码相机的许多环境，对于捕捉高质量的图像并不理想。例如，试图捕捉名片图像的数码相机的用户只是用一只手随意地拿住名片放在相机镜头前，同时用另一只手拿住相机，然后拍照。在那种情况下，诸如镜头到名片的距离，及相机的图像平面相对于名

片正面的角度这样的可变因素是不理想的。因此，最后所得到的图像可能包含象射影变形这样的缺陷。

附图说明

为了使本发明易于理解，并有效地付诸实践，参考附图所示的示范实施例，其中在遍及各个视图中，相同的数字表示同样的或功能类似的元件。结合下面详细描述并且组成说明书一部分的附图，有助于进一步说明依据本发明的实施例并且解释依据本发明的各种原理和优点，其中：

图 1 示出了依据本发明实施例的相机系统的正面示意图。

图 2 示出了依据本发明实施例的相机系统的背面示意图。

图 3 示出了图像射影变形原理的示意图。

图 4 示出了通过相机系统的预览视窗所观察到的显著射影变形的名片图像。

图 5 是依据本发明实施例用于描绘名片预览图像的预览视窗示意图。

图 6 示出了依据本发明一个实施例的捕捉物体正面图像方法的步骤流程图，该物体具有至少两个基本上直的边缘。

熟练的技术人员应当理解到为了简单清晰地说明附图中的元件，无需按照一定比例绘图。例如，为了增进理解本发明的实施例，附图中的一些元件尺寸可以相对于其它元件放大些。

具体实施方式

在详细描述依据本发明的实施例之前，应当注意到，实施例主要在于涉及用于捕捉图像的方法和系统的方法步骤和装置的组件。因此，装置件件和方法步骤通过常用符号适当的表示在附图中，这里仅仅示出了那些和理解本发明实施例有关的具体细节，以免对于受益于这里描述的本领域普通技术人员来说是容易理解的细节使得本公开难懂。

在该文件中，相关术语如左和右、上和下等等仅用来区别一实体或动作和其他的实体或动作，无需要求或暗示这种实体或动作之间的任何实际的这种关系或次序。术语“包括”、“包含”或其任何其它的变体规定为覆盖一个非专有包括，使得包括元件列表的过程、方法、项目（article）或装置并不仅仅包括那些已述元件，而且还包括其它未特别列出的元件或这种过程、方法、项目或装置固有的元件。无需更多的约束条件，为一个元件加上前言“包含一……”并不排除在包括该元件的过程、方法、项目或装置中出现另外完全相同的元件。

参考图 1 所示，示出了依据本发明实施例的相机系统 100 的示意图。和大多数相机一样，系统 100 包括结合一正面 110 的相机外壳 105。正面 110 包括一适合于接收图像的图像传感器 115。图像传感器 115 可以包括常规的透镜和光学器件，以及数字图像传感器，例如电荷耦合装置（CCD）传感器、CMOS 传感器，等等。

参考图 2，示出了相机系统 100 的背面 120 的示意图。背面 120 包括一预览视窗 125，该预览视窗适合于显示图像传感器 115 接收到的图像表示。和许多数码相机一样，本领域的技术人员应当认识到，预览视窗 125 可充当常规相机的取景器，并且实时显示位于图像传感器 115 前的场景的任何移动图像。典型地，在预览视窗 125 中所显示的这种实时图像仅仅是瞬时的，并且只有当用户启动快门按扭（未示出）、定时器或其它图像捕捉触发机构时，该实时图像才能被捕捉到系统 100 的内存中。本发明的一个实施例进一步包括模式选择开关 130，该模式选择开关可以用来将相机系统 100 设置成各种照相模式。例如，和许多现有技术的设备一样，模式选择开关 130 可以用来将系统 100 设置成标准静态图像模式、视频模式、低光线模式、高速模式，等等。依据本发明，模式选择开关 130 还可以用来将系统 100 设置成文档捕捉模式。当模式选择开关 130 被设置成文档捕捉模式时，基准线 135 显示在预览视窗 125 中。本领域的技术人员应当认识到，模式

选择开关 130 可以是位于相机外壳 105 上的物理开关或触发按扭，或例如可以是使预览视窗 125 启动的软件开关。外壳 105 的内部还包括处理器 140，该处理器可操作地连接到图像传感器 115、预览视窗 125 以及模式选择开关 130，有助于控制那些元件之间的交互作用，并且用于处理图像数据。

依据本发明不同的实施例，基准线 135 可包括各种尺寸、形状、颜色及格式，并且可以是半透明或不透明的。在使用基准线 135 期间，基准线 135 用来指导系统 100 的用户使图像传感器 115 位于相对于例如名片物体的适当方位上。因此，在使用基准线 135 定位期间，基准线 135 通常相对于预览视窗 125 固定。依据本发明的另一个实施例，基准线 135 可以被印刷在预览视窗 125 上，或以别的方式永久地叠印在预览视窗 125 上。

如图 2 所示，在实施本发明一个实施例的操作期间，用户常常通过如下确定基准线 135 的位置来试图确定文档的框架：使基准线 135 基本上平行的紧邻预览视窗 125 中所显示的文档表示的直线边缘 205 或基本上平行的位于直线边缘 205 之上。在这样的定位中，系统 100 被设计来捕捉良好聚焦并且清晰的文档图像，该系统具有适当的分辨率，以使得印刷在文档上的任何文本的光学字符识别有效并且可靠。

参考图 3，示出了图像射影变形原理的示意图，如本领域技术人员所了解的。所示的光线 305 通过透镜 315 从物体平面 310 传播到图像平面 320 上。至于本发明，物体平面 310 相当于将要映像的物体表面，例如名片的表面，透镜 315 相当于相机系统 100 的图像传感器 115 的元件，图像平面 320 相当于接收到的图像，例如在系统 100 的预览视窗 125 中所显示的预览图像。在物体平面 310 和图像平面 320 不能达到基本平行的情况下，透镜 315 使得印刷在物体平面 310 上的图像描绘按照已知的射影变形方式在图像平面 320 上发生变形。例如，在物体平面上的区域“P”的形状可以通过透镜 315 放大，并且通过射

影变形扭曲成图像平面上不同形状的区域“Q”。

参考图 4，示出了通过相机系统 100 的预览视窗 125 所观察到的显著射影变形的名片图像。尽管名片左侧上的印刷文本保持清晰并且易读，但由于名片的表面倾斜于系统 100 的图像平面 320，因此显示出的名片右侧上的印刷文本是模糊的并且不易读取。正如本领域技术人员所知的，相机系统 100 的有限景深和射影变形使得图像右侧变得模糊不清。

本发明能够通过确保被映像的物体的正面基本上平行于相机系统 100 的图像平面 320 来减少图像的射影变形。例如，当系统 100 处于文档捕捉模式时，仅仅当名片的直线边缘 205 基本上平行于预览视窗 125 中所显示的相应的基准线 135 时，系统 100 才为用户提供捕捉物体的图像，例如名片。

参考图 5，是依据本发明具体实施例用于描绘名片预览图像的预览视窗 125 的示意图。为了达到说明的目的，所示名片倾斜于系统 100 的图像平面 320，使得卡片的顶部直线边缘 205 不能达到基本平行于相应的顶部基准线 135。在这样的定位中，当系统 100 在上述文档捕捉模式中操作时，系统 100 显示出物体平面 310 和图像平面 320 达不到基本平行，因此不能捕捉到最终的名片图像。正如本领域中众所周知的，可使用图像边缘检测技术来可靠地计算出具体的基准线 135 和文档预览图像中相应的直线边缘 205 之间的角度。在图 5 中，示出了 3 条基准线 135；然而，根据本发明公开的内容，本领域技术人员应当认识到，依据本发明不同的实施例可以使用不同数量的基准线 135，例如二条、三条、四条或更多的基准线 135。此外，所有的基准线 135 不必是直交的。因此，例如相机系统 100 可以使用三角形排列的三条基准线 135 来校准三角形状的文档。

可以使用各种技术来向用户指示适当数量的基准线 135 基本上平

行于预览视窗 125 中所描绘的物体的相应直线边缘 205。例如，可以提供由声音组成的警报，象从相机系统 100 输出的哔哔声。同样，还可以是在预览视窗 125 上照亮的光线或在相机系统 100 其它别的地方上照亮的光线。此外，图象指示器可以显示在预览视窗 125 上，例如，其中当每一条基准线 135 基本上平行于相应的直线边缘 205 时，该基准线 135 可以单独地改变颜色或闪烁。作为替换，当预览视窗 125 上所显示的直线边缘 205 基本上平行于相应的基准线 135 时，系统 100 能够自动捕捉所选择的图像，为用户提供或不提供指示。

依据本发明的另一个实施例，可使用附加的几何校准技术来测量物体平面 310 是否和图像平面 320 对齐。例如，依据本领域技术人员已知的标准图像分析技术来测量在预览视窗 125 中所描绘的不同直线边缘 205 的长度。基于“没影点（vanishing point）”的效应，当边 205 之一离图像传感器 115 更远时，按照二维图像的显示，矩形文档的两条相对平行的直线边缘 205 具有不同的长度。因而在图 5 中，离相机系统 100 较远的名片右侧的垂直直线边缘 205 比名片左侧的垂直直线边缘 205 短。因此，在本发明的实施例中增加了额外的灵敏度，其中仅仅当预览视窗 125 中所显示的物体的两平行直线边缘 205 基本上具有相同的长度并且基本上与相应的基准线 135 平行时，才可以捕捉到图像。

本领域技术人员应当认识到，小型化数码相机技术使得相机外壳 105、图像传感器 115 及预览视窗 125 几乎可以是任意尺寸的，因而本发明的实施例可以结合到各种电子装置中，例如移动电话、个人数字助理及膝上型电脑。此外，基准线 135 可以被设计成与不同类型物体的直线边缘 205 一致。例如这种物体可以包括矩形、三角形或其它形状的纸件，如名片，或其它具有直线边缘 205 和一表面的物体，其中将该表面定位在平行于相机系统 100 的图像平面 320 的方向上有助于减少射影变形。

参考图 6，示出了依据本发明一个实施例的捕捉物体正面图像方法的步骤流程图，该物体具有至少两个基本上直的边缘 205。首先，在步骤 605，系统 100 的图像传感器 115 接收预览图像。预览图像描绘了物体的直线边缘 205。如上所述，该预览图像通常是瞬时图像，用于适当地确定或校准相机系统 100 相对于物体平面的方向。接下来，在步骤 610，显示出预览图像表示，其描绘了与相机系统 100 相关的预览视窗 125 中的直线边缘 205 和同时存在的至少两条基准线 135，其中每一条基准线 135 对应于一条直线边缘 205。依据本发明的一个实施例，在用户选择一种文档捕捉模式之后，基准线 135 才显示在相机系统 100 中；作为替换，基准线可以被永久地叠印到预览视窗 125 上。接下来，在步骤 615，当预览视窗 125 中所显示的直线边缘 205 基本上与相应的基准线 135 平行时，为用户提供一个指示。在步骤 620，仅仅当预览视窗 125 中所显示的直线边缘 205 基本上与相应的基准线 135 平行时，才提供用于捕捉物体图像。最后，在步骤 625，对捕捉到的物体图像执行光学字符识别。

方法 600 中的步骤 625 可以使用存储在相机系统 100 中的软件来执行，或作为替换在远程位置执行步骤 625。例如，相机系统 100 可以仅用来捕捉精确、清晰的文本数据图像，在执行任何光学字符识别之前，可将该图像下载到另一个位置。

总之，本发明是用于捕捉至少具有两条基本上直的边缘 205 的物体正面图像的改进方法和系统。本发明的实施例采用象模式选择开关 130 和预览视窗 125 这种相机系统 100 常见的特征使得用户在使用中友好并且直观。因而本发明有助于用户精确、可靠地捕捉物体正面的图像，其中物体平面 310 基本上平行于图像平面 320。因此，减少了图像中的射影变形，使图像更加清楚、精确。在减少射影变形的情况下，更有可能高精确度地执行加速图像捕捉处理过程，例如对文本图像所执行的光学字符识别处理过程。

上面的详细描述仅仅提供了示范实施例，并不意味着限制本发明的范围、适用性或构造。相反地，示范实施例的详细描述为本领域的技术人员提供了用于实施本发明示范实施例的可执行描述。应该理解，在不脱离所附权利要求所阐述的本发明的精神和范围内，能够作出对元件的功能和配置及步骤进行的各种变化。应当理解这里所描述的实施例可由一个或多个常规处理器和控制一个或多个处理器运行的唯一存储的程序指令组成，结合特定的非处理器电路，这里所描述的用于捕捉物体正面图像的一些、大多数或所有功能。该非处理器电路可以包括（但不限于）无线电接收机，无线电发射机，信号驱动器，时钟脉冲电路，电源电路，以及用户输入设备。同样地，这些功能可以被解释为执行捕获物体正面图像方法的步骤。作为替换，一些或全部的功能可以通过不具有存储程序指令的状态机来实现，或在一个或多个特定用途集成电路（ASIC）中实现，其中每一项功能或某些特定功能的结合作为常规逻辑电路来实现。当然，也可以结合两种方法来使用。因而，这里描述了执行这些功能的方法和装置。此外，希望普通技术人员在这里所公开的原理和原则的指导下，使用最小限度的实验就能够容易地生成这类软件指令和程序以及 IC，尽管可能付出巨大努力，以及基于如可利用的时间、当前技术和经济上的考虑激发出多种设计选择。

在前述的说明中，描述了本发明的具体实施例。然而，本领域的普通技术人员应当理解，在不脱离如权利要求所阐述的本发明范围内，对本发明可作出各种修改和变化。因此，说明书及附图应当认为是对本发明的解释而非限定，以及所有这样的修改都意味着包括在本发明的范围内。该利益、优点、问题的解决方法以及可产生任何利益、优点、或发生或变得更为显著的解决方法的任意成份，都不能解释为任一或全部权利要求的重要、必需或基本的特征或成份。本发明由所附权利要求单独定义，在该申请未决期间所作出的任何修改以及那些权利要求的所有等价物都包含在其内。

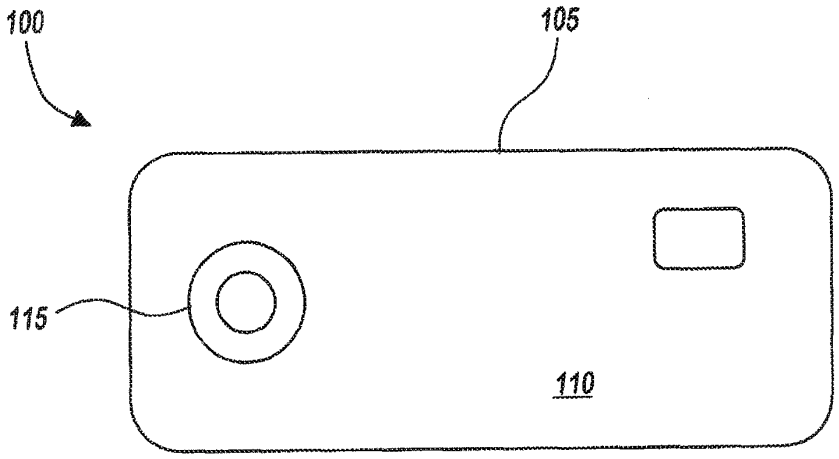

图1

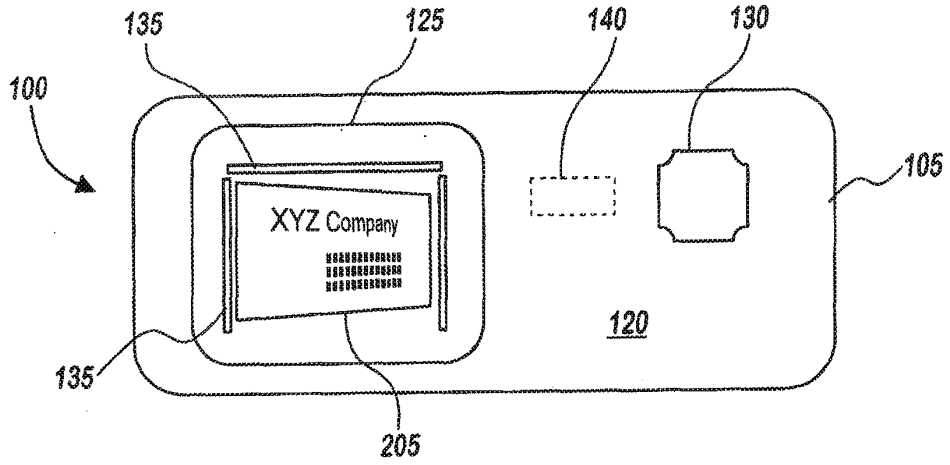

图2

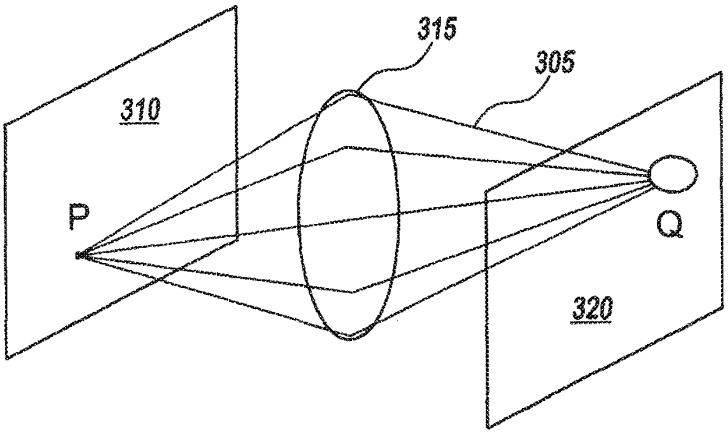

图3

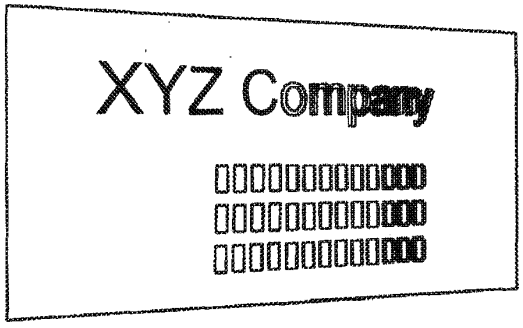

图4

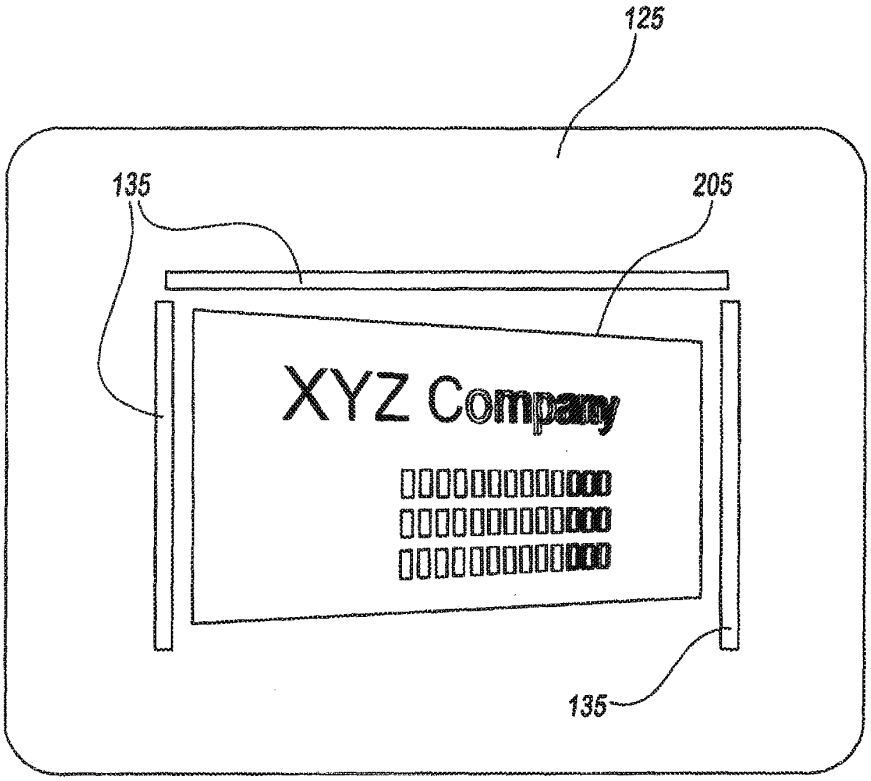

图5

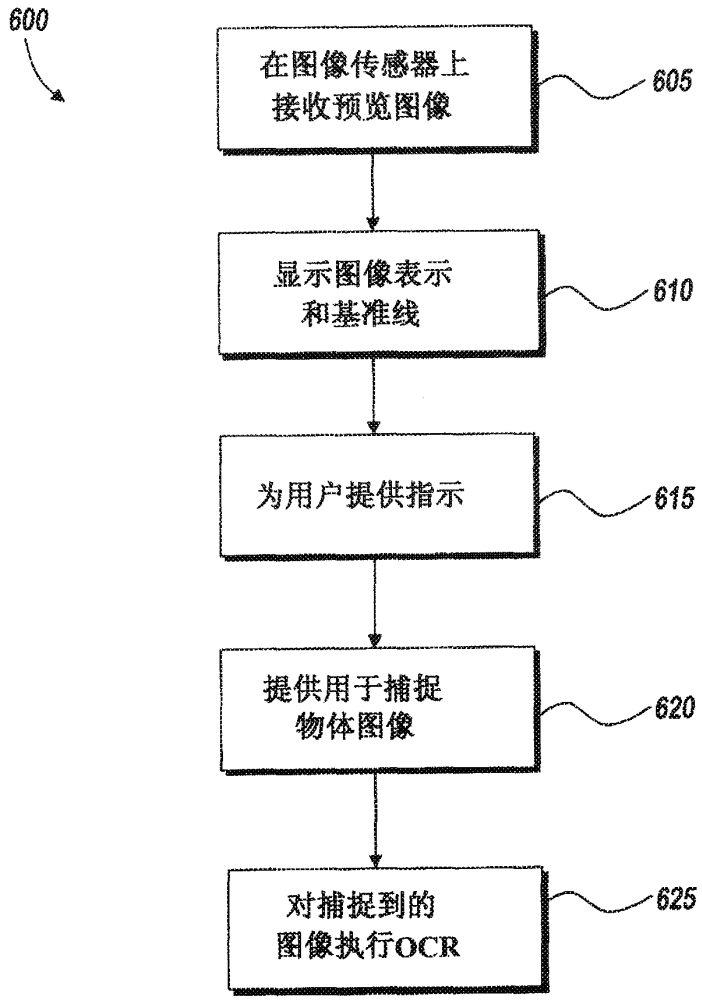
600
在图像传感器上
接收预览图像
605
显示图像表示
和基准线
610
为用户提供指示
615
提供用于捕捉
物体图像
620
对捕捉到的
图像执行OCR
625

图6

(12) INTERNATIONAL APPLICATION PUBLISHED UNDER THE PATENT COOPERATION TREATY (PCT)

(19) World Intellectual Property Organization
International Bureau

(43) International Publication Date
22 January 2004 (22.01.2004)

PCT

(10) International Publication Number
WO 2004/008350 A1

(51) International Patent Classification[7]: G06F 17/60, 157/00

(21) International Application Number: PCT/AU2003/000858

(22) International Filing Date: 3 July 2003 (03.07.2003)

(25) Filing Language: English

(26) Publication Language: English

(30) Priority Data:
2002950093 10 July 2002 (10.07.2002) AU

(71) Applicant (*for all designated States except US*): **AJJA PRODUCTIONS PTY LIMITED** [AU/AU]; Suite 1210, 265 Exhibition Street, Melbourne, Victoria 3000 (AU).

(72) Inventor; and
(75) Inventor/Applicant (*for US only*): **ASHLEY, John** [GB/AU]; Suite 1210, 265 Exhibition Street, Melbourne, Victoria 3000 (AU).

(74) Agent: **FREEHILLS CARTER SMITH BEADLE**; Level 43, 101 Collins Street, Melbourne, Victoria 3000 (AU).

(81) Designated States (*national*): AE, AG, AL, AM, AT, AU, AZ, BA, BB, BG, BR, BY, BZ, CA, CH, CN, CO, CR, CU, CZ, DE, DK, DM, DZ, EC, EE, ES, FI, GB, GD, GE, GH, GM, HR, HU, ID, IL, IN, IS, JP, KE, KG, KP, KR, KZ, LC, LK, LR, LS, LT, LU, LV, MA, MD, MG, MK, MN, MW, MX, MZ, NI, NO, NZ, OM, PG, PH, PL, PT, RO, RU, SC, SD, SE, SG, SK, SL, SY, TJ, TM, TN, TR, TT, TZ, UA, UG, US, UZ, VC, VN, YU, ZA, ZM, ZW.

(84) Designated States (*regional*): ARIPO patent (GH, GM, KE, LS, MW, MZ, SD, SL, SZ, TZ, UG, ZM, ZW), Eurasian patent (AM, AZ, BY, KG, KZ, MD, RU, TJ, TM), European patent (AT, BE, BG, CH, CY, CZ, DE, DK, EE, ES, FI, FR, GB, GR, HU, IE, IT, LU, MC, NL, PT, RO, SE, SI, SK, TR), OAPI patent (BF, BJ, CF, CG, CI, CM, GA, GN, GQ, GW, ML, MR, NE, SN, TD, TG).

Published:
— *with international search report*

For two-letter codes and other abbreviations, refer to the "Guidance Notes on Codes and Abbreviations" appearing at the beginning of each regular issue of the PCT Gazette.

(54) Title: FINANCIAL DOCUMENT PROCESSING METHOD AND SYSTEM

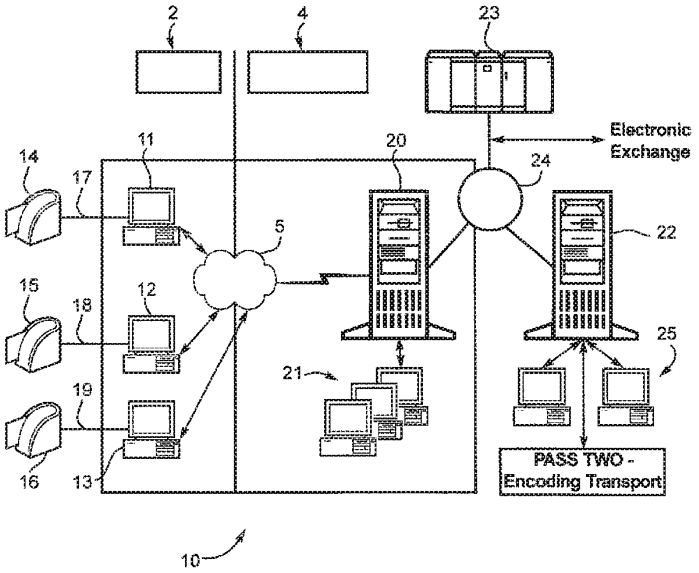

(57) Abstract: A method for processing financial documents, including the steps of: (a) receiving a batch of one or more financial documents (1) at a customer premises (2); (b) processing the financial documents in a customer system (3; 11-19) to create document images files and associated document data files; (c) transmitting the document image files and document data files from the customer system (3; 11-19) to a bank operations system (20-25); (d) forwarding the financial documents to a bank operations centre (4), and (e) matching the financial documents to the document image files and document data files in the operations system to enable final processing of the financial documents.

WO 2004/008350 A1

FINANCIAL DOCUMENT PROCESSING METHOD AND SYSTEM

The present invention relates generally to the processing of financial documents by financial institutions, and in particular to the electronic capture and use of image and data files created from the financial documents by customers of financial institutions. The present invention has particular application in the electronic processing of cheques by banks and like financial institutions, and it will be convenient to describe the invention hereafter in relation to that exemplary, application. It will be understood however that the invention is not limited to that application only, and may be used in conjunction with, the processing of deposit slips, withdrawal slips or other financial documents.

Currently, information that is contained on cheques is processed three times, twice by bank customers and the third time by the bank itself. The first time that the information is used is when bank customers enter relevant cheque information into their own accounts receivable system. The second time the information is used is when bank customers manually record the cheque amounts and balances to credit. This process is used to prepare a transaction summary sheet for deposit, together with the physical cheques, at a bank branch or with an authorised bank agent.

After the customer has taken the cheques to a bank branch, the cheques are couriered to a bank operations centre. At this location, the cheques are processed a third time by the bank's voucher image processing system. Bank operations staff use this system to capture images of the cheques and enter the information contained on the cheque, balance and encode the cheque transaction data, and then store the physical cheque and credit document transactions. Once the transactions are captured and balanced by the bank, other subsequent processes are carried out including for example verification of credit, electronic exchange of "clean items" and updating of the bank's demand deposit account system.

This procedure is cumbersome and inconvenient for both bank customers and the banks themselves. Bank customers would prefer to avoid having to enter cheque information more than once and being required to visit a bank branch to make deposits. On the other hand, banks would prefer a procedure where the data processing steps required to be performed at their bank operations centre are minimised.

It would be desirable to provide a method and system for processing financial documents that alleviates or overcomes one or more problems of known financial document processing systems and methods.

It would also be desirable to provide a method and system for processing financial documents that is simple and convenient for both banks and their customers.

It would also be desirable to provide a method and system of processing financial documents that is simple to install, use and/or maintain by banks and their customers.

With this in mind, one aspect of the invention includes a method for processing financial documents, including the steps of:

(a) receiving a batch of one or more financial documents at a customer premises,

(b) processing the financial documents in a customer system to create document images files and associated document data files,

(c) transmitting the document image files and document data files from the customer system to a bank operations system,

(d) forwarding the financial documents to a bank operations centre, and

(e) matching the financial documents to the document image files and document data files in the operations system to enable final processing of the financial documents.

Advantageously, bank customers are thus able to create and send images of cheques, deposit slips, withdrawal slips or other financial documents, and

associated document data, for submission to an appropriate bank operations centre. Upon subsequent receipt of the physical financial documents at the bank operations centre, the documents are matched with the document images and data to enable final processing of the documents to occur, without the need for bank branch and operations personnel to handle and/or without the need to enter transaction details a third time.

Step (b) may include:

capturing document data from a header document,

capturing document data contained on financial documents in the batch,

entering transaction data indicative of a financial transaction associated with the financial documents, and

capturing document images from financial documents in the batch.

The header document may contain machine-readable indicia, such as magnetic ink characters.

The machine-readable characters on the header document may be indicative of the customer.

The financial documents may contain machine-readable indicia.

The machine-readable characters on the financial document may be indicative of a financial transaction.

Step (b) may also include:

validating and repairing document data.

Step (b) may also include:

validating an authenticating marking, such as a signature, on the financial documents.

Step (e) includes:

selectively editing the transmitted document data and image files prior to matching and final processing.

The financial documents may be cheques, deposit slips, withdrawal slips or like documents.

The operations centre and operations system may be associated with a

financial institution, such as a bank.

The customer premises and customer system may be associated with a customer of the financial institution.

Step (d) may include depositing the financial documents to a branch of the financial institution for forwarding to the operations centre.

The customer system may include a document reading device operatively connected to a computing apparatus.

The computing apparatus may include a processing unit and associated memory device storing program instructions for causing the computing apparatus to carry out steps (b) and (c).

The operations system may include a bank receiving server.

The bank receiving server be operatively connected to a voucher image processing system for performing final processing of the financial documents.

The bank receiving server may include a processing unit and associated memory device storing program instructions for receiving the document image files and document data files from the customer system and for causing the bank receiving server to carry out step (e).

Another aspect of the invention provides a method for processing financial documents, wherein a batch of one or more financial documents are received at a customer premises, the method including the steps of:

(a) processing the financial documents in a customer system to create document images files and associated document data files, and

(b) transmitting the document image files and document data files from the customer system to an operations system for matching with the financial documents.

A further aspect of the invention provides a method for processing financial documents, wherein a batch of one or more financial documents is received at a customer premises, the financial documents are processed in a customer system to create document images files and associated document data files, the document image files and document data files are transmitted from the

customer system to an operations system, and the financial documents forwarded to an operations centre, the method including the step of:

(a) matching the financial documents to the document image files and document data files in the operations system to enable final processing of the financial documents.

Yet another aspect of the invention provides a system for processing financial documents, the system including:

a customer system acting to process financial documents to create document images files and associated document data files, and to transmit the document image files and document data files from the customer system to an operations system, and

an operations system acting to match the financial documents to the document image files and document data files to enable final processing of the financial documents.

A still further aspect of the invention provides a customer system including a document reading device operatively connected to a computing apparatus, wherein the computing apparatus includes a processing unit and associated memory device storing program instructions for causing the computing apparatus to carry out steps (b) and (c).

Another aspect of the invention provides a bank receiving server including a processing unit and associated memory device storing program instructions for receiving the document image files and document data files from the customer system and for causing the bank receiving server to carry out step (e).

A still further aspect of the invention provides a computer program including program instructions for causing the computing apparatus to carry out the above-described functionality.

A computer program including program instructions for causing the bank receiving server to carry out the above-described functionality.

The following description refers in more detail to the various features of

the processing of financial documents according to the present invention. To facilitate an understanding of the invention, reference is made in the description to the accompanying drawings where the financial document processing is illustrated in a preferred embodiment. It is to be understood, however, that the present invention is not limited to the preferred embodiment illustrated in the drawings.

In the drawings:

Figure 1 is a schematic diagram illustrating the entities involved in the processing of financial documents according to one embodiment of the present invention;

Figure 2 is a schematic diagram showing a financial document processing system;

Figure 3 is a flow chart showing the operation of the financial document processing system shown in Figure 2;

Figure 4 is a schematic diagram of an exemplary header document for use in the financial document processing system of Figure 2;

Figures 5 to 8, 10, 11 and 15 to 23 are representative displays presented to a user of a computing device at a customer's premises forming part of the financial document processing system of Figure 2;

Figure 9 is a flow chart illustrating the operation of an editing process carried out by the computing apparatus of the financial document processing system shown in Figure 2; and

Figure 12 is a flow chart showing the functional steps involved in the entry of transaction data into the computing apparatus forming part of the financial document processing system of Figure 2.

Referring now to Figure 1, there is shown generally a schematic diagram of the entities involved in the processing of financial documents according to one embodiment of the present invention. Initially, cheques 1 arrive by mail or other forms of submission, such as personal presentation, at the premises 2 of a bank customer. At these premises, the mail containing the cheques is opened,

and the cheques moved to a cheque processing department. Within that department, a customer system including cheque processing equipment 3 is used to read information printed on a batch of cheques, and to capture images of the front and back of each cheque. Bank customer staff then perform manual data entry, error correction and other related actions to the captured images and data. Document image files and associated document data files resulting from the processing of the cheques 1 are then transmitted to a bank operations centre 4 via a telecommunications network 5, such as the Internet or a bank's own intranet.

Each batch 6 of cheques received at the bank customer premises 2 are grouped, together with a client header document, and deposited in the night safe of a bank branch 7. The next day, a courier collects the batches 6 of cheques and client header documents, and forwards the cheque batches and header documents to the bank operations centre 4. Alternatively, the batches of cheques and client header documents may be mailed to the bank operations centre 4. The cheques received are then matched with the document data files and document image files previously transmitted from the bank customer premises, in order for the processing of the cheques to be finalised.

The electronic capture of the document image files and associated document data files, as well as the subsequent transmission and processing of these files, is facilitated by the financial document processing system 10 shown in Figure 2. This figure shows representative computing apparatus 11 to 13, such as personal computers or servers, installed at the premises of one or more separate bank customers. Document reading devices 14 to 16 are respectively connected to the computing apparatus 11 to 13. The document reading devices 14 to 16 act to drive individual cheques past Magnetic Ink Character Recognition (MICR) devices to read magnetic ink characters printed on the cheques. The document reading devices 14 to 16 additionally scan the front and back surfaces of the cheque in order to generate an image of each surface of the cheque. The captured MICR data and document image data are transmitted to

the computing apparatus 11 to 13 via RS-232 communications links 17 to 19 or other forms of connection, such as a USB connection. In other embodiments of the invention, machine readable indicia other than magnetic ink characters may be contained on the documents processed.

Data captured by the computing apparatus 11 to 13 is used to generate document image files and associated document data files. These files are transmitted to the bank operations centre 4, typically via the Internet, the bank's own intranet or another communications network. The elements 11 to 19 of the financial document processing system 10 form the bank customer system.

The document image files and document data files are received at the bank operations centre 4 by a bank receiving server 20. Image terminals 21 are connected to the bank receiving server 20 to enable visualisation and manipulation of the received files. The bank receiving server 20 is connected to the bank's conventional voucher image processing system 22 and a bank host Demand Deposit Accounting (DDA) system 23 via a token ring network 24 or other local area network. Image terminals 25 are connected to the voucher image processing system 22 in order to enable visualisation and manipulation of the files received by and stored in the voucher image processing system. It will be appreciated that computing apparatus 11 to 13 and the bank receiving server 20 include data processing units and associated memory devices storing program instructions to enable the computing apparatus and bank receiving server to carry out functionality described below. The elements 20 to 25 of the financial document processing system 10 form a bank operations system for matching the cheques or other financial documents and the document image files and document data files to enable final processing of the financial documents.

Following initialisation of the financial document processing system 10, a password logon screen is displayed to users of computing apparatus 11 to 13. Once logon has been completed and the identity of each user authenticated, the

cheques 1 received at the bank customer premises 2 are processed to capture images of the front and back of the cheque, and to read information contained on the cheque. The logon process may optionally include "finger print recognition" to authenticate a user. The recognition and authentication of a user's finger print adds an extra level of security to the logon process.

As seen in Figure 3, once the computing apparatus in question has been initialised at step 30, the user is prompted to enter today's date at step 31. Once the date has been entered at step 32, and verified by a system clock at step 33, a header record is created to contain notably a location number, and user ID. Blank fields are established by the computing apparatus notably to record the number of cheques processed in a batch, beginning and ending primary transaction numbers, total number of records and the total dollar value of cheques processed. Once the header record and fields have been opened, and the corresponding file name created, the computing apparatus enables the first part of the process to capture document images and document data from the cheques. This process includes the capture of a header document provided by a bank to each bank customer, and of one or more cheques to be processed by each bank customer. The process continues until data from the header document and all cheques are captured by the document reading device.

An exemplary header document 60 is shown in Figure 4. The header document includes magnetic ink characters able to be recognised by the document reading devices 14 to 16. The font structure of the magnetic ink characters includes 4 characters used by the banking industry to generate field separation. Each of these characters are alpha characters, and are used to separate strings of numeric fields containing information desired to be captured.

The header document 60, which is supplied to a customer by a bank, includes sufficient information in the Magnetic Ink Character Recognition (MICR) line 61 to ensure that the correct document is being used, and to create a unique record that can be used by the bank operations centre to access a customer's data file when the cheques 1 arrive at the bank operations centre 4.

The header document 60 plays a role in linking the physical cheques 1 to the document image files and associated document data files derived from the cheques 1. For Australian cheques, the MICR line 61 includes an "Extra Aux Dom" field 62, and "Aux Dom" field 63, a "BSB" field 64, "Account Number" field 65, and "Tran Code" field 66. The Extra Aux Dom field includes a string of numbers representing a customer unit serial number together with a cheque digit, separated by 2 alpha characters.

The Aux Dom field 63 includes 6 characters representing a header document serial number supplied by the bank. These numbers are used by the bank to keep track of header document usage, and to provide a header document replenishment system similar to that provided for cheque books.

The BSB field 64 represents the bank branch where the customer will place their deposit of physical cheques in the overnight safe.

The Account Number field 65 includes 9 characters representative of a customer primary account number. The Tran Code field 66 includes 2 characters used by the bank operations centre 4 to confirm that this document is a header document for an electronic image cheque deposit. The combination of the numbers encoded in the fields 62 to 66 creates a unique record to enable the document image files and document data files from the cheques scanned at the bank customer premises to be matched with the physical cheques subsequently received by the bank operation centre 4.

Data in one or more of the fields 62 to 66 may have been embedded in software loaded on the customer computing apparatus during installation, and used to validate the data read from the header document.

The Header document mirrors the MICR band structure when used with non Australian cheques such as cheques drawn on US banks which have a Federal Reserve Bank/American Bankers Association MICR band structure.

Returning again to Figure 3, the user is prompted at step 34 to feed the header document into the document reading device. The software resident in the computing apparatus of the bank customer will not allow any other item to

be captured until the header document 60 has been accepted. During capture of the header document, the user is presented with a display 70, as shown in Figure 5. This display provides the user with a visual indication of the step being performed in window 72. The display 70 also presents a captured image of the header document in a window 73 for verification by the user. The computing apparatus then acts to authenticate the captured header details against data embedded in the software loaded in the computing device apparatus, before enabling cheque capture by the document reading device.

The display 70 may also present specific business advertising content to the user. The bank receiving server 20 may maintain or access business advertising content for transmission and display to the user via any of the graphic user interfaces presented during operation of the financial document processing system.

At step 35, cheques are individually fed into the credit document reading device. During cheque capture, images of both the front and back of the cheque are captured, as well as the data included in the MICR line on each cheque. During this process, the user is presented with a display 74 shown in Figure 6. This display provides the user with a visual prompt in a window 75 to feed in the cheques to be processed, as well as displaying an image in a window 76 of the front of each cheque as it is being processed. During the cheque capture process, a file of the data included in the MICR line of the processed cheque, is stored within the computing apparatus. As each new cheque is captured, the data from the MICR line is compared to the data in that temporary file. Any matches indicate that a user has attempted to capture the same cheque twice. If this happens, the computing apparatus will suspend the cheque capture process. Supervisor intervention will subsequently be required to restart the process.

During the cheque capture process, a suspend button 77 provided on the display 74 enables users to temporarily suspend cheque processing. Once this button has been activated, the user is presented with an option to temporarily shut down the computing apparatus or leave it in a suspended state. In order to

restart, the user is required to re-enter a password via the window 78, shown on the display 79 of Figure 7. Following re-entry of the password, the user is required to activate a restart button 80 in order to resume cheque capture 80. Once all cheques have been captured, the user terminates the capturing process at step 36 by selecting a "stop transport" button 81 on the display 79.

Once the capture cheques process 37 has been concluded, image data entry is carried out by the user. The purpose of this step is to correct any misreads of the MICR line data and to manually enter the amount of each cheque. During the cheque capture process, the MICR line data and document image files are stored on the hard drive of the computing device in question. A series of simple edits are also performed on the MICR line data. For example, a field size check is performed on the BSB field, a range check performed on the Aux Dom field, calculation of characters between MICR line special characters is performed, and areas where rejected characters have been identified are edited. Using this information, which will have resulted in identifier flags being inserted into a record created for each cheque, the user will be presented with one or more "electronic scissored" areas of the MICR line.

Figure 8 shows an example of the "electronically scissored" areas presented to a user by the computing apparatus at the bank customer premises. In this example, the MICR line 90 of a cheque 91 is dissected by the software resident in the computing apparatus into three MICR line segments 92 to 94 for display to the user. The manner in which these MICR line segments are used for data validation, repair and editing is illustrated in the flow chart 100 shown in Figure 9. Following cheque processing, the captured MICR line data will either be complete, or will have reject characters embedded or failed some basic editing tasks due to character substitution. In the last two cases, a flag is set by the software resident in the computing apparatus to "electronically scissor" the MICR line, as described in relation to Figure 8, from the front image of the cheque. Selected image portions of the MICR line, together with the data captured from the cheque processing, are then displayed to a user during a

MICR line repair process.

At step 101, the MICR line of each cheque is read. If no MICR band is detected at step 102, the user is advised at step 103 to alert the bank to a possible fraud. If the cheque in question has been read only once, the cheque is re-fed in a different orientation. If it is detected at step 102 that the cheque has been fed in two different orientations, a determination is made at step 104 as to whether the MICR line data has been completely captured or not. If the data has been completely captured, a bank logical test is performed at step 105 to verify the format and range of data within each of the fields 62 to 66 of the MICR line 61.

However, if the MICR line data has not been completely read, the "electronically scissored" MICR line segments retrieved at step 106 are displayed to the user together with the captured MICR line data. Figure 10 provides exemplary displays 120 and 121 of two manners in which the incomplete MICR line data may be edited. The first, as exemplified by display 120, is to re-key the entire field, whilst the second, as shown in display 121, is to key only missing characters. The software resident in the computing apparatus in the bank customer premises makes this determination based upon the number of errors detected in the field in question. Operational usage has determined that where there are more than three errors, it is quicker and more accurate to re-key the entire field.

Once the missing characters have been input at step 107, the bank logical test is performed at step 105. If it is determined at step 108 that the bank logical test was failed, steps 106 and 107 are repeated. If a second time failure is detected at step 108, the cheque capture process is discontinued at step 109. However, if as a result of editing the bank logical test was passed, a determination is made as to whether the item is a master control file at step 110. If so, the MICR line data validation, repair and editing process is discontinued at step 109. If the item is not on a master control file, the MICR data record is moved to a disc storage master control file, together with associated control

data, at step 111. Figure 11 represents a display 130 presented to a user during the operation of the afore-mentioned MICR line data correction.

Following the capture of the MICR line data, and images of the front and back of each cheque, the user is then prompted to manually enter transition data indicative of the amount of each cheque. The process for amount data entry is represented in the flow chart 140 shown in Figure 12. At step 141, the amount field 95 is electronically scissored from the image of the front of each cheque and displayed to the user, as shown in Figure 13, of the computing device at the bank customer premises. At step 142, and as shown in Figure 14, the amount field 95 cut from the cheque image 91 is displayed to the user on a display 150 together with an amount entry window 151.

Once the amount has been keyed by the user, a determination is made at step 143 as to whether the amount is below a threshold value. If so, the amount field for that cheque is updated at step 144. However, if it determined at step 143 that the cheque amount exceeds a predetermined threshold, the user is prompted at step 145 to re-key amount backwards. Accordingly, a display 152 is presented to the user, including the amount field from the cheque image and a reverse amount data entry window 153. If it is determined at step 146 that the correct amount has been keyed, then the amount field is updated. If differing amounts have been entered forwards and backwards, the user is once again presented with the display 150 and the amount keyed in the forward direction again.

At step 148, the software determines whether the amount keyed in step 147 corresponds to either of the two previously keyed amounts. If so, the amount field is updated, otherwise the amount data entry process is discontinued at step 149. An exemplary amount data entry screen 160 is shown in Figure 16.

In order to ensure that cheques being presented have been signed, application software resident in the computing apparatus at the bank customer

premises electronically scissors out an area of each cheque in the signature panel to perform a "pixel or byte count" test. A minimum pixel or byte level will be set in the software so that a range check can be performed. In exemplary cheque 91, shown in Figure 17, the signature panel 161 is determined to include 2,250 bytes, whereas the signature panel 162 is determined to have only 1,400 bytes. If the image byte counter is calculated to be below a set minimum value of 2,000 bytes, then a display 163 is presented to the user inviting the user to validate the signature. If a "no" button is selected, a flag is set to prevent the item from being captured again in error. This flag will also be used to prevent data for this cheque being included in the document data and image files transmitted to the bank operations centre 4.

At the end of this process, the computing apparatus in the bank customer premises is ready to generate document image files and associated transaction data files for transmission to the bank receiving server 20. As part of the completion of the cheque capture process, the resident software causes a summary of capture screen 170 to be presented to the user. This display presents to the user the total number of items that have been successfully captured (electronic items) and the value of those electronic items, together with the total number of items that have failed a critical edit during data capture (non electronic items) and a total value of those non-electronic items. The user is also able to select whether a single account or multiple accounts are to be credited or not. The user is also able to select one or more cheques which will be processed through an Automated Clearing House (ACH).

If a user choses to credit one or more bank accounts with the values of the captured cheques, the user is presented with a display 180, shown in Figure 19. This display shows to the user an account allocation table 181 summarising the values of scanned cheques to be applied to a selected account, as well as identifying un-allocated cheques. A location identifier indicating which account the cheques are to be credited to is displayed to the user. If the location identifier is "U", the user is alerted that the cheque has failed a critical edit

during data capture.

Where a customer has only one account, the user is presented with a display 190, as shown in Figure 20. The account allocation table 191 indicates the value of all cheques scanned and sums the value of those cheques. In addition, the location indicator identifies the account to which the cheques have been credited.

Similarly, where a user has multiple accounts, a display 200, as shown in Figure 21, is presented to the user. In this example, an account allocation table 201 displays the values of cheques allocated to various accounts, and sums the value of the cheques allocated to each separate account. Location identifiers are again provided to indicate which account each cheque was allocated to, as well as which cheques failed critical edit during data capture.

Once all items have been allocated to an account, the user is presented with a display 210 inviting them to transmit the document image files and associated document data files to the bank operations centre 4 for subsequent matching to the physical cheques at a later time.

Returning again to Figure 3, it will be appreciated from the foregoing that during the cheque capture process 37 the MICR line is read at step 38, and the MICR line data then augmented by manual entry of the amount of each cheque or other transaction data at step 39. Images of both sides of each cheque are captured at step 40. Moreover, a data control record, including the status of various flags and other control information either entered by the user or generated by the software resident in the computing apparatus in question, is created at step 41.

The process described in relation to steps 30 to 41 results in the creation of a header record for each batch of cheques processed, and an MICR data record, trace line record, and image front and back files for each cheque within the batch. In the example shown in Figure 3, the header record MICR data record, trace line record and image front and back files for a first cheque are

referenced 50 to 54 respectively, whereas the MICR data record, trace line record and image front and back files for a second cheque are respectively referenced 55 to 58.

Once the document image files and transaction data files for a cheque batch have been transmitted to the bank operations centre 4, the final processes required to be performed by the user is preparing a physical cheque batch deposit to be dropped off at a branch night safe or mailed to the bank operations centre. A fast deposit or similar envelope, designed for the express purpose of depositing non-cash deposits, may be used. A user may place in the fast deposit envelope the header document, following by all cheques that have been processed by the computing apparatus and associated document reading device at a bank customer premises. The cheques are placed in the envelope in the sequence that they were processed, and oriented with the MICR data line facing forward and in line with the header.

The bank receiving server 20 located at the bank operations centre 4 acts as the primary interface between the bank customer system and the conventional bank voucher image processing system 22. During daily cheque processing, the bank operations centre 4 will receive the document image files and associated document data files at the bank receiving server 20. Computing apparatus 11 to 13 initially establish a connection via the telecommunications network 5 to the bank receiving server 20. As part of a connection process, the inbound document reading device and computing apparatus specific information is checked at the bank receiving server to ensure that the transmitting computing apparatus is registered as an authorised user. Upon validation, the information captured by the document reading device and computing apparatus is accepted by the bank receiving server and stored for editing.

Each batch of files is initially processed by an edit program forming part of the software resident on the bank receiving server. Conveniently, this edit program may replicate much of the functionality of the edit program forming part of the voucher image processing system 22.

During editing, the bank receiver system editing program reviews specifically data indicators associated with each of the records transmitted by the computing apparatus 11 to 13. Each data record is checked for validation in accordance with the Australian Payments Clearing Association (or its equivalent) rules and/or bank – bank by lateral agreements. Software to enable the performance of this process specifically installed by the bank where the bank receiving server 20 is installed. The processing review establishes the authenticity of the cheques scanned, for example a "no MICR indicator set" would identify a potential fraudulent cheque, and also establishes the accuracy of the value of the cheque by performing both the review of the data indicators, setting internal "high dollar" review levels and random checking. Data that fails to pass any of the above prescribed edits are flagged for further processing by the bank at which the cheque was initially received.

The edit program acts firstly to verify the data captured from the MICR line on each cheque within the batch processed by the computing apparatus. A cheque digit routine is implemented and an exception item file created. This file is presented to proof operators via the image terminals 25. At these terminals, bank operation staff review both the cheque image and associated data that are flagged by the editing process, and take appropriate corrective action. This may include the re-entering of the amount of the cheque, the rekeying of the MICR information, checking and rebalancing the credit, signature checking and denying the transaction. Statistics related to both the data checked, typically information of a critical nature such as potential fraud or continuous misreading of MICR, are collected by the bank receiving server 20 for user feedback. As a result of this first edit, a percentage of cheques will remain as "not for value" items. The balance, known as "for value" or alternatively "dirty paper" items, will have a flag set so that when the physical cheques arrive subsequently from the bank branch 7, they will be out-sorted during subsequent processing for inter-bank exchange. The exception item file is also used with the document image files for MICR line data correction.

The edit program also enables bank operation staff to perform random checking of the received document image/data files. For example, a flag may be set in the received data where there has been duel keying of high value cheques. Bank operations staff may decide to view these cheques, and if appropriate verify these amounts.

The document image file may be used as a temporary tool on the bank receiving server prior to image truncation. When the physical cheques arrive for encoding and sorting, the received document image files may be permanently stored for archiving purposes.

The received document image files are stored in a temporary data storage on the bank receiving server 20 until all files within a batch have been received. Analysis of flags transmitted as part of the data files to the bank receiving server 20 create exception item processing, which is accomplished using the image terminals 25 of the voucher image processing system 22. Edits performed on the MICR line data will also be performed on the bank receiving server, and any required correction performed in conjunction with the appropriate document image file.

It will be appreciated that a variety of edit programs may be used in conjunction with the bank receiving server, and that the software resident in the computing apparatus will be required to provide document image files, and associated document data files including pointers to the document image files, in a format suitable for use by the edit program in use on the bank receiving server.

When the batch of physical cheques arrives at the bank operation centre 4, the envelope or other package in which the cheques and header document are transported will be opened, and the contents checked to ensure that the first document is the header document and that all cheques are correctly oriented. This batch of cheques is then forwarded to the bank operations centre transport room for matching with the previously received document image files and associated document data file to enable final processing of the cheques.

Alternatively, instead of matching the cheque for encoding after the Bank Receiving Server has performed its described editing functions, the cheque may be reformatted for electronic transmission to facilitate the cheque clearing process.

It will be appreciated from the foregoing that the present invention provides an image based electronic deposit system that automates the compilation of customer created cheque image and associated data file without requiring a customer's presence at a bank branch. The automated compilation may also result in files that are directly useable by a customer's accounts receivable system. The cheques are in effect deposited at a bank's operation centre by means of electronic file transfer. Upon receipt of the physical cheques by the bank operation centre, minimal activity is required by bank operations staff in order to finalise processing of the cheques.

Those skilled in the art will appreciate that there may be many variations and modifications of the above described system and method which are within the scope of the present invention.

CLAIMS:

1. A method for processing financial documents, including the steps of:

(a) receiving a batch of one or more financial documents at a customer premises;

(b) processing the financial documents in a customer system to create document images files and associated document data files;

(c) transmitting the document image files and document data files from the customer system to a bank operations system;

(d) forwarding the financial documents to a bank operations centre, and

(e) matching the financial documents to the document image files and document data files in the operations system to enable final processing of the financial documents.

2. A method according to claim 1, wherein step (b) may include:

capturing document data from a header document;

capturing document data contained on financial documents in the batch;

entering transaction data indicative of a financial transaction associated with the financial documents; and

capturing document images from financial documents in the batch.

3. A method according to claim 2, wherein the header document contains machine-readable indicia.

4. A method according to claim 3, wherein the machine-readable indicia are magnetic ink characters.

5. A method according to either claim 3 or claim 4 wherein the machine-readable indicia on the header document are indicative of the customer.

6. A method according to any one of the preceding claims, wherein the financial documents contains machine-readable indicia.

7. A method according to claim 6, wherein the machine-readable characters on the financial document indicative of a financial transaction.

8. A method according to any one of the preceding claims, wherein step (b) further includes:

validating and repairing document data.

9. A method according to any one of the preceding claims, wherein step (b) further includes:

validating an authenticating marking on the financial documents.

10. A method according to claim 9, wherein the authenticating marking is a signature.

11. A method according to any one of the preceding claims, wherein step (e) includes:

selectively editing the transmitted document data and image files prior to matching and final processing.

12. A method according to any one of the preceding claims, wherein the financial documents include any one or more of cheques, deposit slips or withdrawal slips.

13. A method according to any one of the preceding claims, wherein the operations centre and operations system are associated with a financial institution.

14. A method according to claim 13, wherein the financial institution is a bank.

15. A method according to any one of the preceding claims, wherein the customer premises and customer system are associated with a customer of the financial institution.

16. A method according to any one of the preceding claims, wherein step (d) includes depositing the financial documents to a branch of the financial institution for forwarding to the operations centre.

17. A method according to any one of the preceding claims, wherein the customer system includes a document reading device operatively connected to a computing apparatus.

18. A method according to claim 17, wherein the computing apparatus includes a processing unit and associated memory device storing program instructions for causing the computing apparatus to carry out steps (b) and (c).

19. A method according to any one of the preceding claims, wherein the operations system includes a bank receiving server.

20. A method according to claim 19, wherein the bank receiving server is operatively connected to a voucher image processing system for performing final processing of the financial documents.

21. A method according to claim 20, wherein the bank receiving server includes a processing unit and associated memory device storing program instructions for receiving the document image files and document data files from the customer system and for causing the bank receiving server to carry out step (e).

22. A method for processing financial documents, wherein a batch of one or more financial documents are received at a customer premises, the method including the steps of:

(a) processing the financial documents in a customer system to create document images files and associated document data files, and

(b) transmitting the document image files and document data files from the customer system to an operations system for matching with the financial documents.

23. A method for processing financial documents, wherein a batch of one or more financial documents is received at a customer premises, the financial documents are processed in a customer system to create document images files and associated document data files, the document image files and document data files are transmitted from the customer system to an operations system, and the financial documents forwarded to an operations centre, the method including the step of:

(a) matching the financial documents to the document image files and document data files in the operations system to enable final processing of the financial documents.

24. A system for processing financial documents, the system including:

a customer system acting to process financial documents to create document images files and associated document data files, and to transmit the document image files and document data files from the customer system to an operations system, and

an operations system acting to match the financial documents to the document image files and document data files to enable final processing of the financial documents.

25. A customer system including a document reading device operatively connected to a computing apparatus, wherein the computing apparatus includes a processing unit and associated memory device storing program instructions for causing the computing apparatus to carry out steps (b) and (c) as defined in any one of claims 1 to 17.

26. A bank receiving server including a processing unit and associated memory device storing program instructions for receiving the document image files and document data files from a customer system and for causing the bank receiving server to carry out step (e) as defined in any one of claims 1 to 17.

27. A computer program including program instructions for causing the computing apparatus of claim 22 to carry out steps (b) and (c) as defined in any one of claims 1 to 17.

28. A computer program including program instructions for causing the bank receiving server of claim 23 to carry out step (3) as defined in any one of claims 1 to 17.

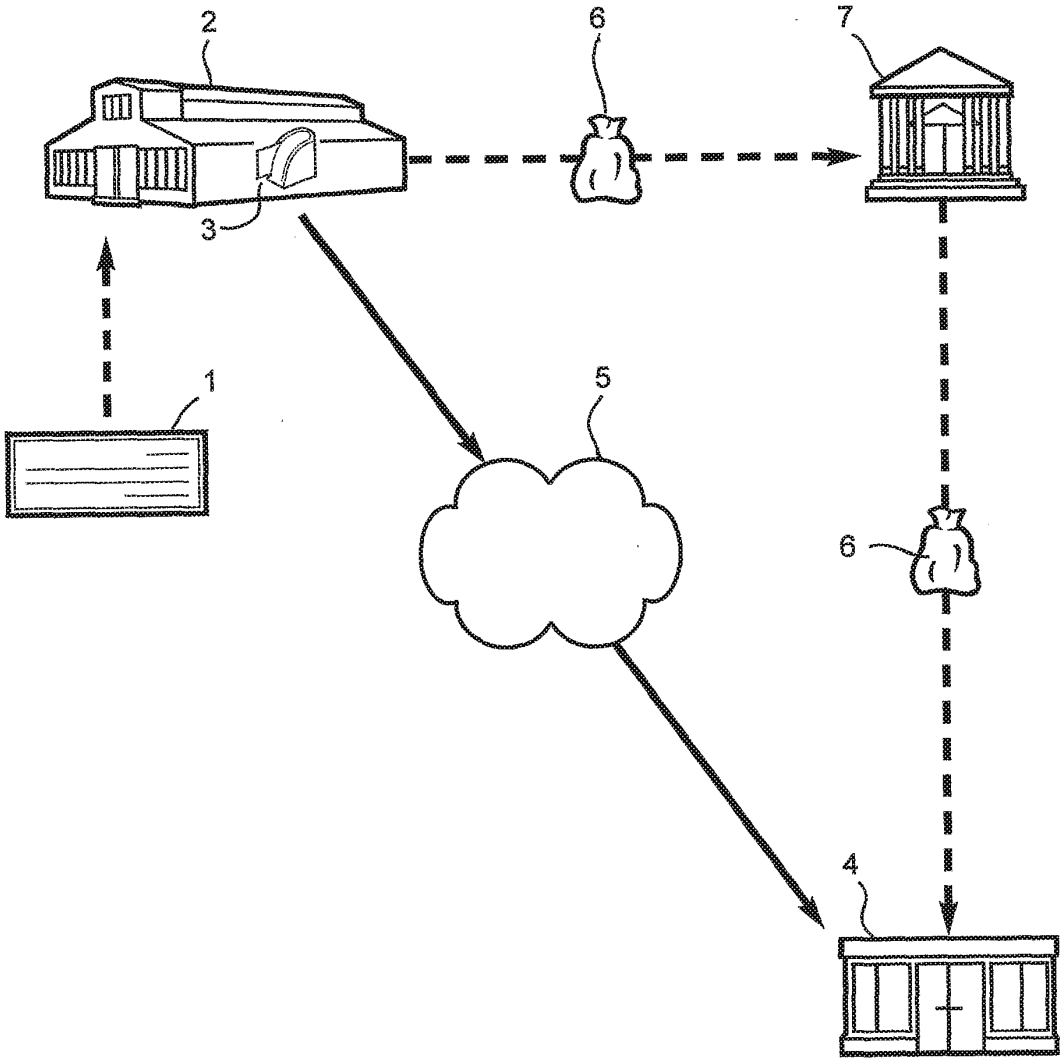

Fig. 1

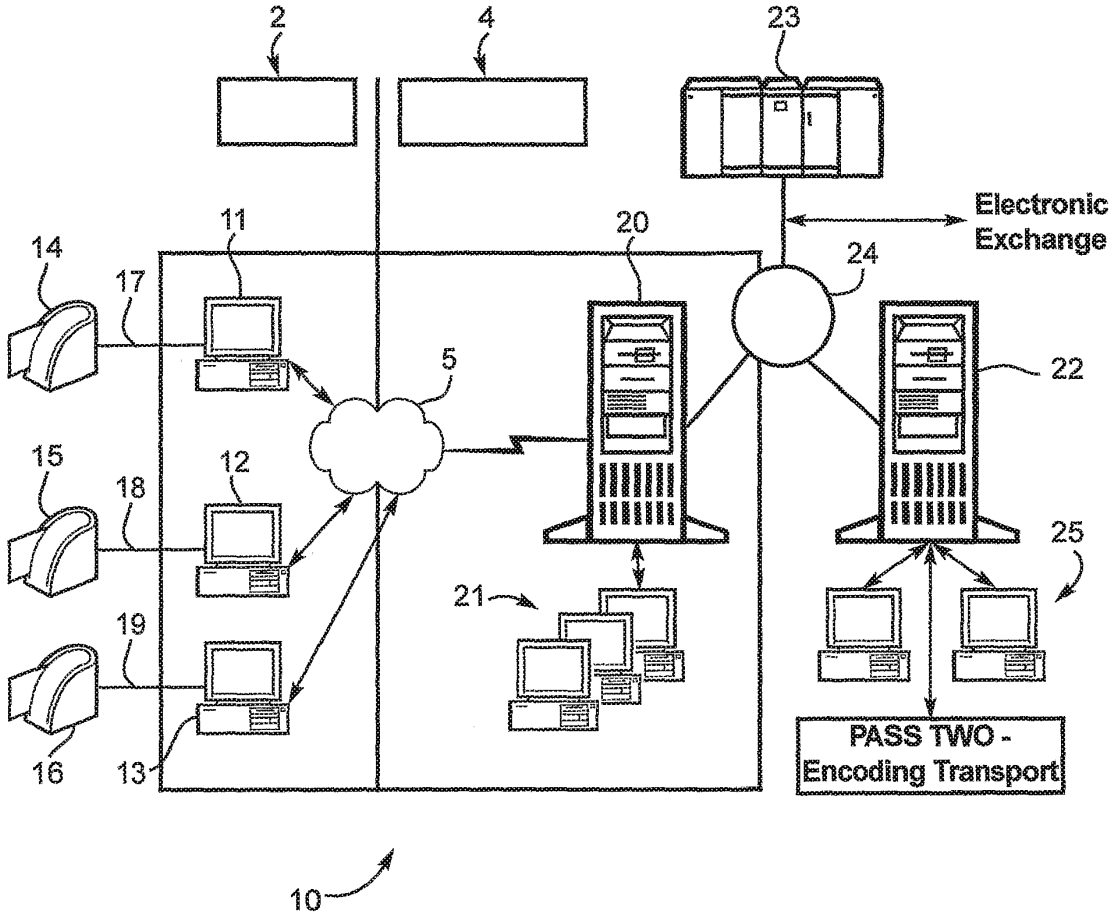
2
4
23
Electronic Exchange
11
20
24
14
17
5
22
15
18
12
25
21
19
16
13
PASS TWO - Encoding Transport
10

Fig. 2

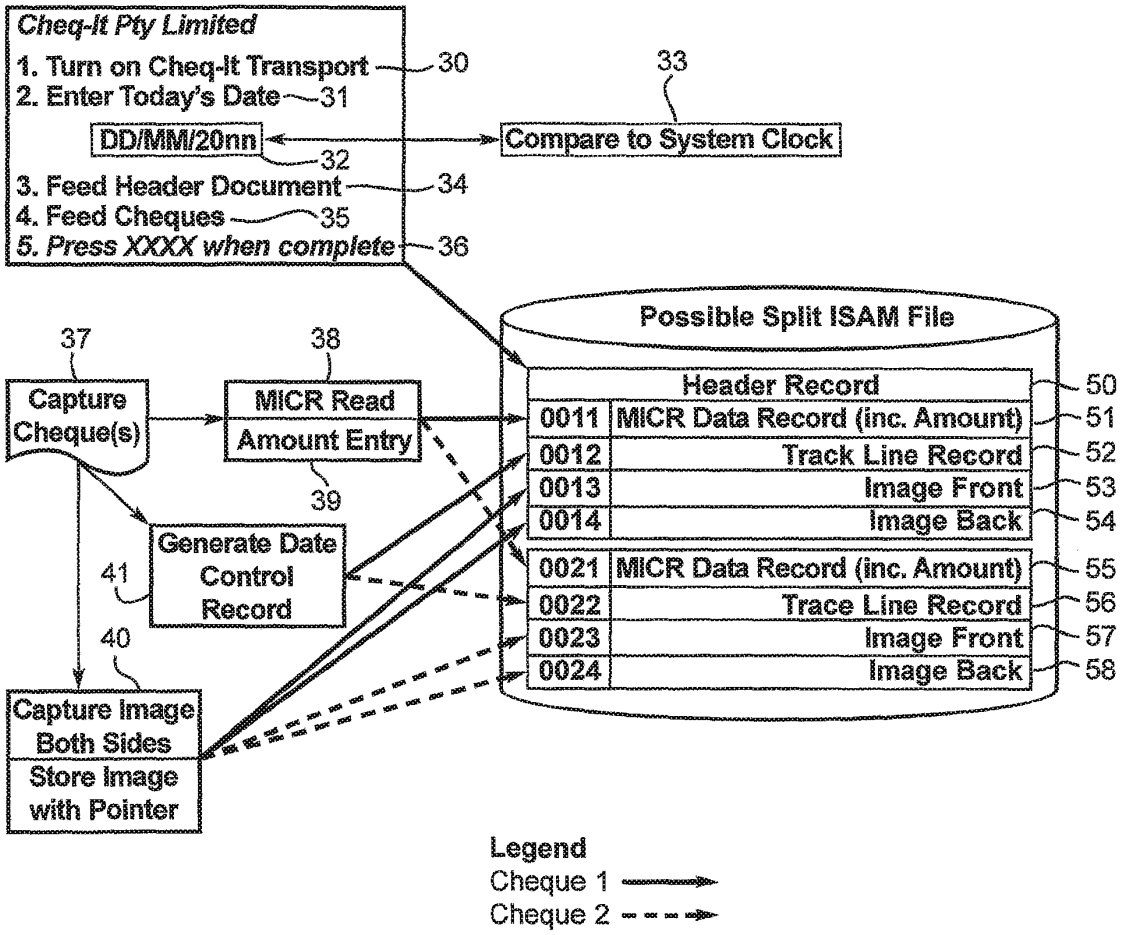
Cheq-It Pty Limited
1. Turn on Cheq-It Transport
2. Enter Today's Date
DD/MM/20nn
3. Feed Header Document
4. Feed Cheques
5. Press XXXX when complete
30
31
32
33
34
35
36
Compare to System Clock
Possible Split ISAM File
37
38
39
40
41
Capture Cheque(s)
MICR Read
Amount Entry
Generate Date Control Record
Capture Image Both Sides
Store Image with Pointer
Header Record
0011 MICR Data Record (inc. Amount)
0012 Track Line Record
0013 Image Front
0014 Image Back
0021 MICR Data Record (inc. Amount)
0022 Trace Line Record
0023 Image Front
0024 Image Back
50
51
52
53
54
55
56
57
58
Legend
Cheque 1
Cheque 2

Fig. 3

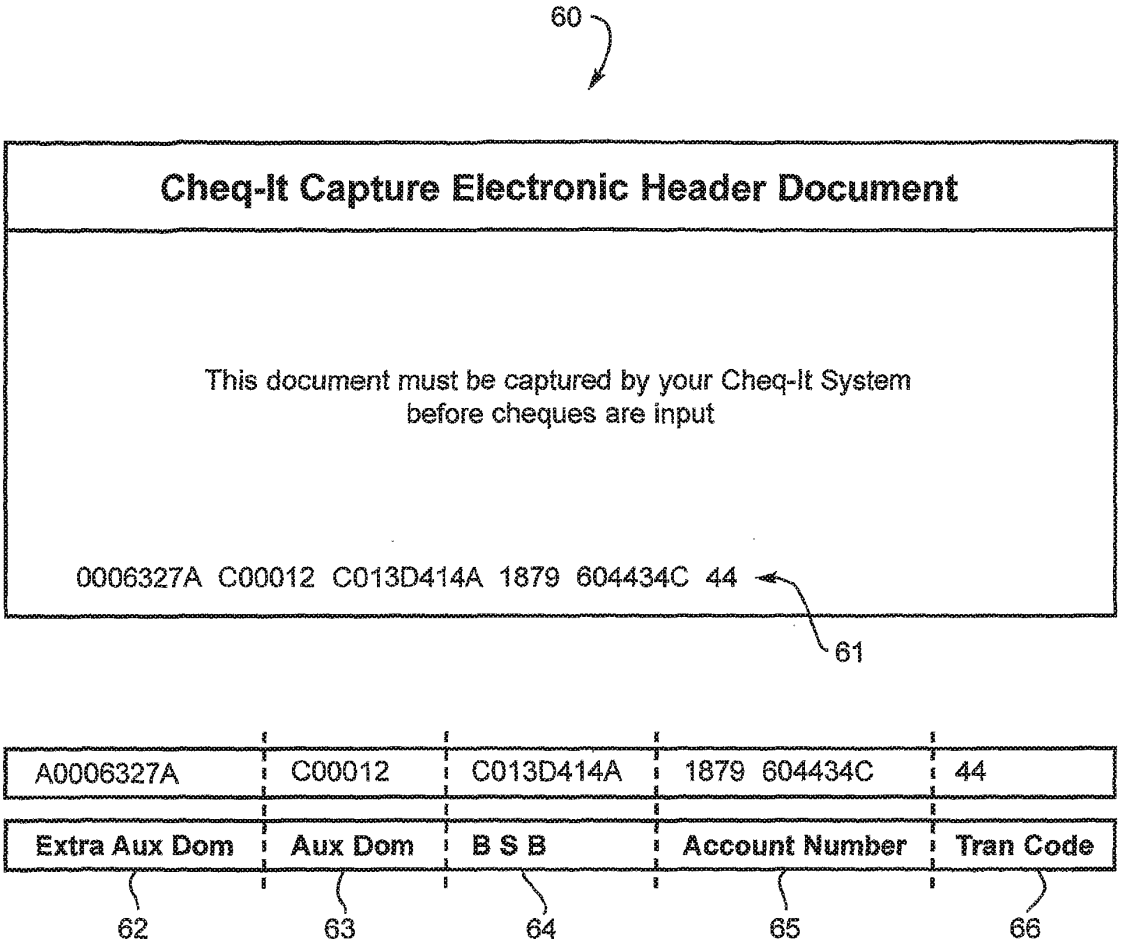
60
Cheq-It Capture Electronic Header Document
This document must be captured by your Cheq-It System
before cheques are input
0006327A C00012 C013D414A 1879 604434C 44
61
A0006327A
C00012
C013D414A
1879 604434C
44
Extra Aux Dom
Aux Dom
B S B
Account Number
Tran Code
62
63
64
65
66

Fig. 4

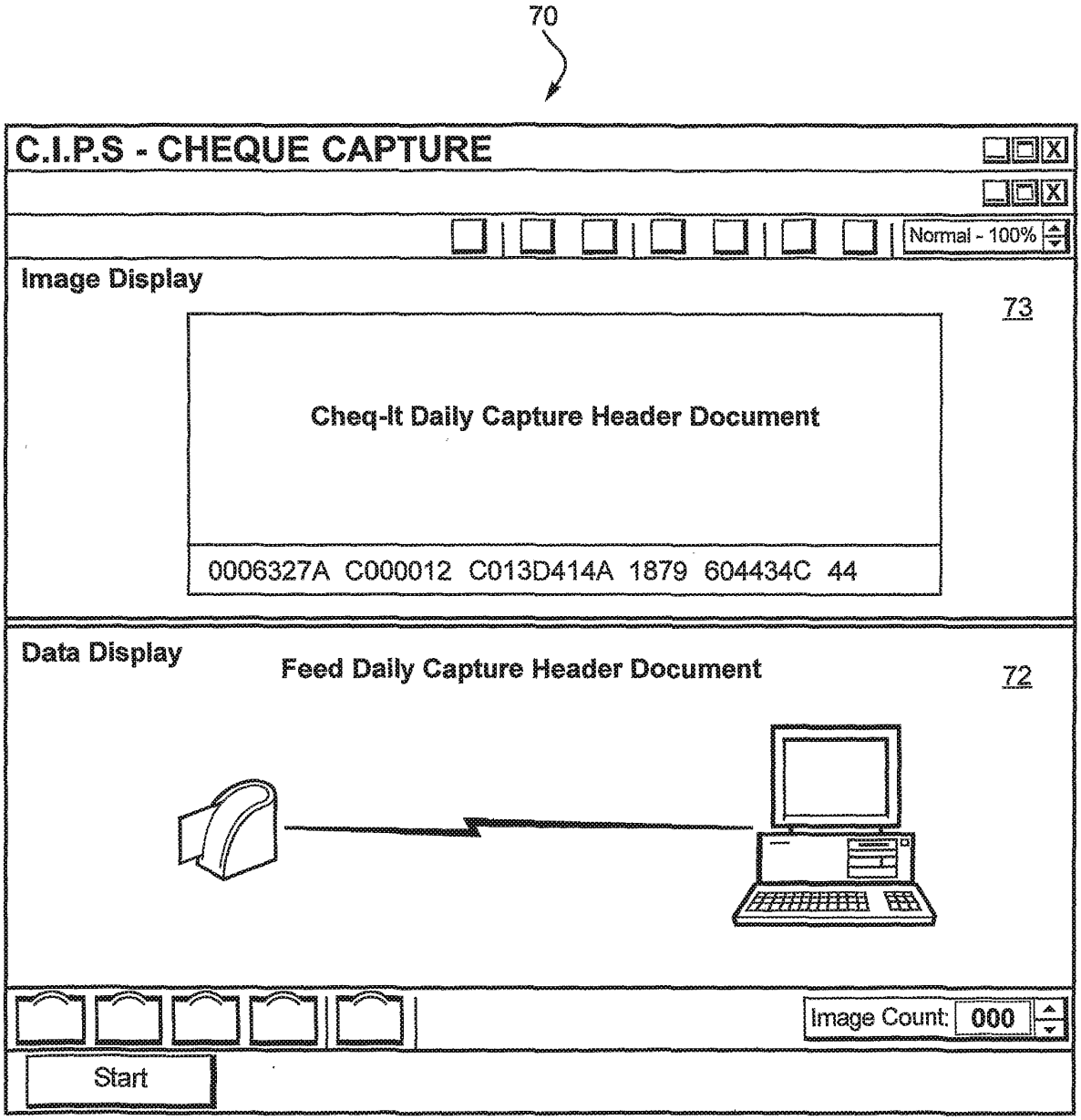
70
C.I.P.S - CHEQUE CAPTURE
Normal - 100%
Image Display
73
Cheq-It Daily Capture Header Document
0006327A C000012 C013D414A 1879 604434C 44
Data Display
Feed Daily Capture Header Document
72
Image Count: 000
Start

Fig. 5

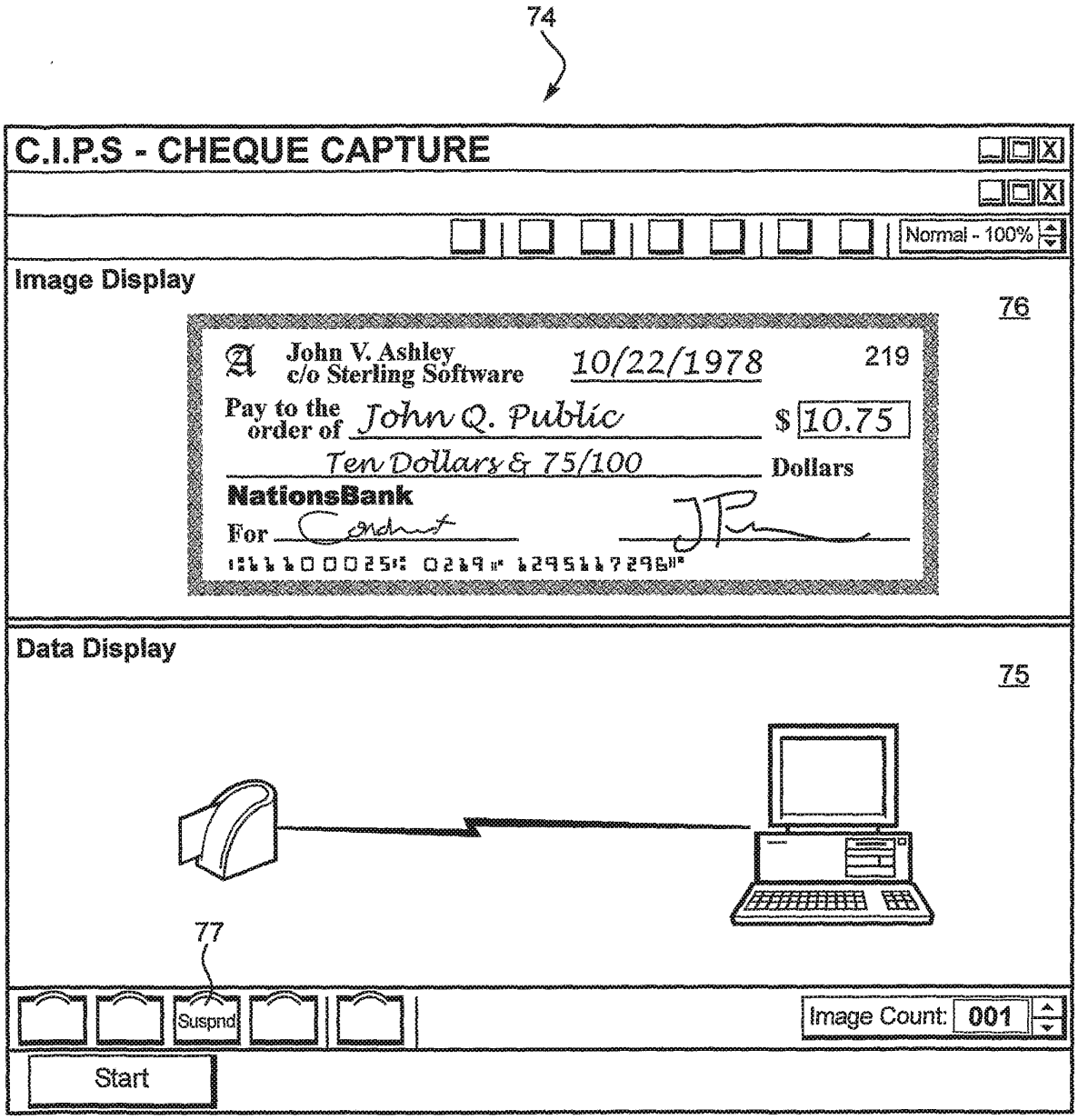
74
C.I.P.S - CHEQUE CAPTURE
Normal - 100%
Image Display
76
John V. Ashley
c/o Sterling Software
10/22/1978
219
Pay to the order of
John Q. Public
$ 10.75
Ten Dollars & 75/100
Dollars
NationsBank
For
Data Display
75
77
Suspnd
Image Count: 001
Start

Fig. 6

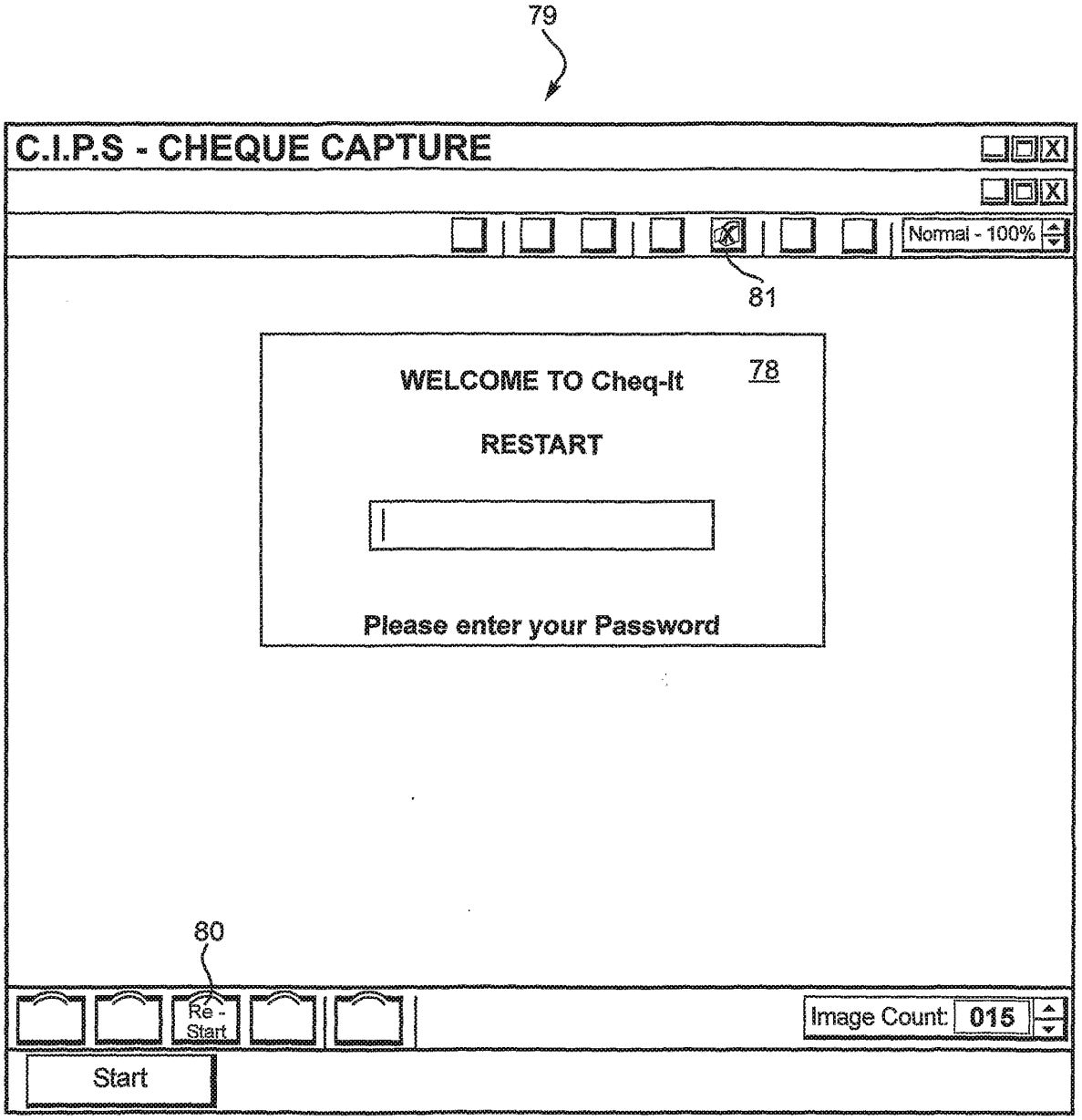
79
C.I.P.S - CHEQUE CAPTURE
Normal - 100%
81
WELCOME TO Cheq-It
78
RESTART
Please enter your Password
80
Re - Start
Image Count: 015
Start

Fig. 7

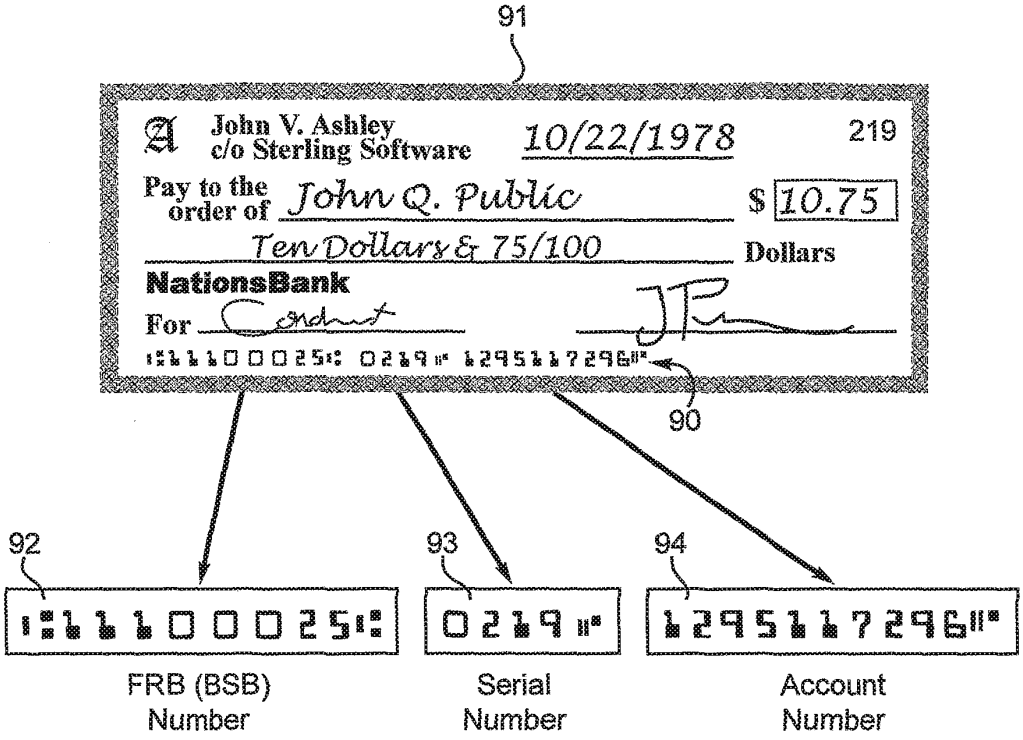
91
John V. Ashley
c/o Sterling Software
10/22/1978
219
Pay to the order of
John Q. Public
$ 10.75
Ten Dollars & 75/100
Dollars
NationsBank
For
90
92
93
94
FRB (BSB) Number
Serial Number
Account Number

Fig. 8

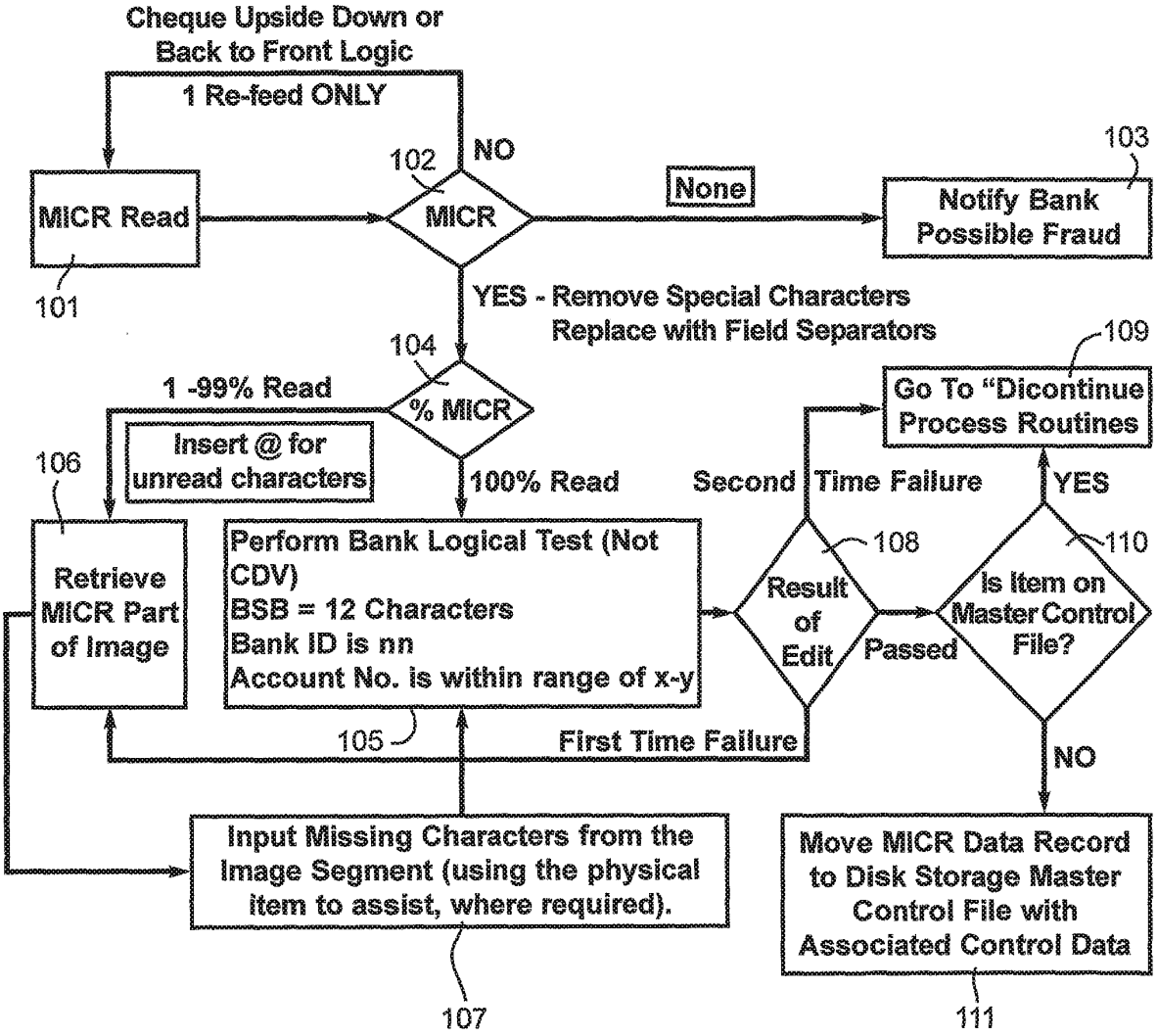
Cheque Upside Down or
Back to Front Logic
1 Re-feed ONLY
MICR Read
101
102
MICR
NO
None
103
Notify Bank
Possible Fraud
YES - Remove Special Characters
Replace with Field Separators
104
% MICR
1 -99% Read
Insert @ for
unread characters
106
100% Read
Retrieve
MICR Part
of Image
Perform Bank Logical Test (Not
CDV)
BSB = 12 Characters
Bank ID is nn
Account No. is within range of x-y
105
Result
of
Edit
108
Second Time Failure
Passed
109
Go To "Dicontinue
Process Routines
YES
Is Item on
Master Control
File?
110
NO
First Time Failure
Input Missing Characters from the
Image Segment (using the physical
item to assist, where required).
107
Move MICR Data Record
to Disk Storage Master
Control File with
Associated Control Data
111

Fig. 9

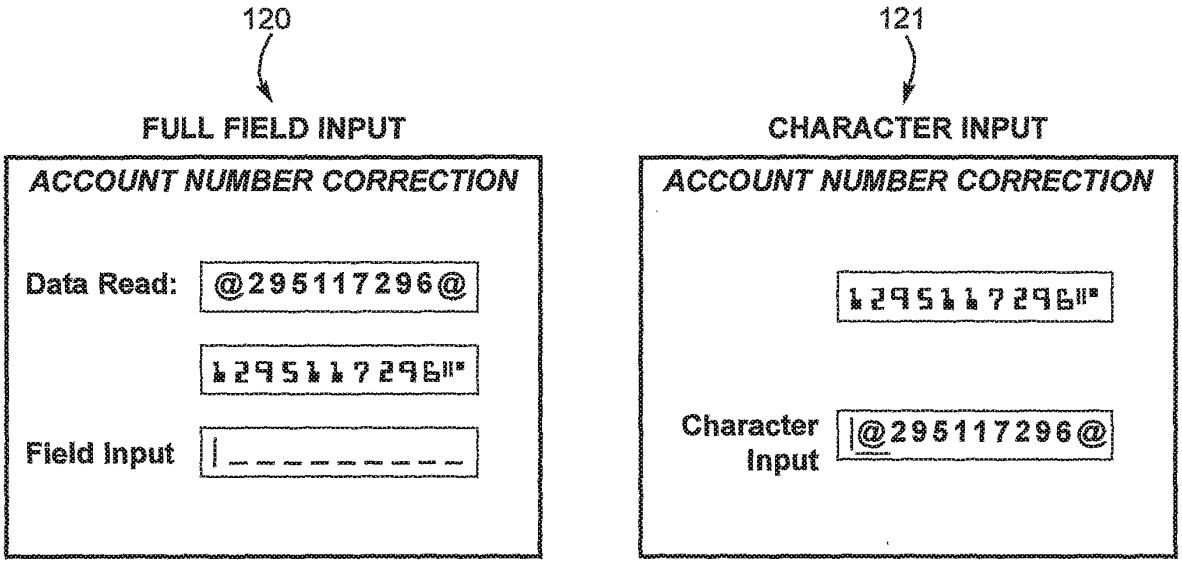
120
FULL FIELD INPUT
ACCOUNT NUMBER CORRECTION
Data Read:
@295117296@
Field Input
121
CHARACTER INPUT
ACCOUNT NUMBER CORRECTION
Character Input
@295117296@

Fig. 10

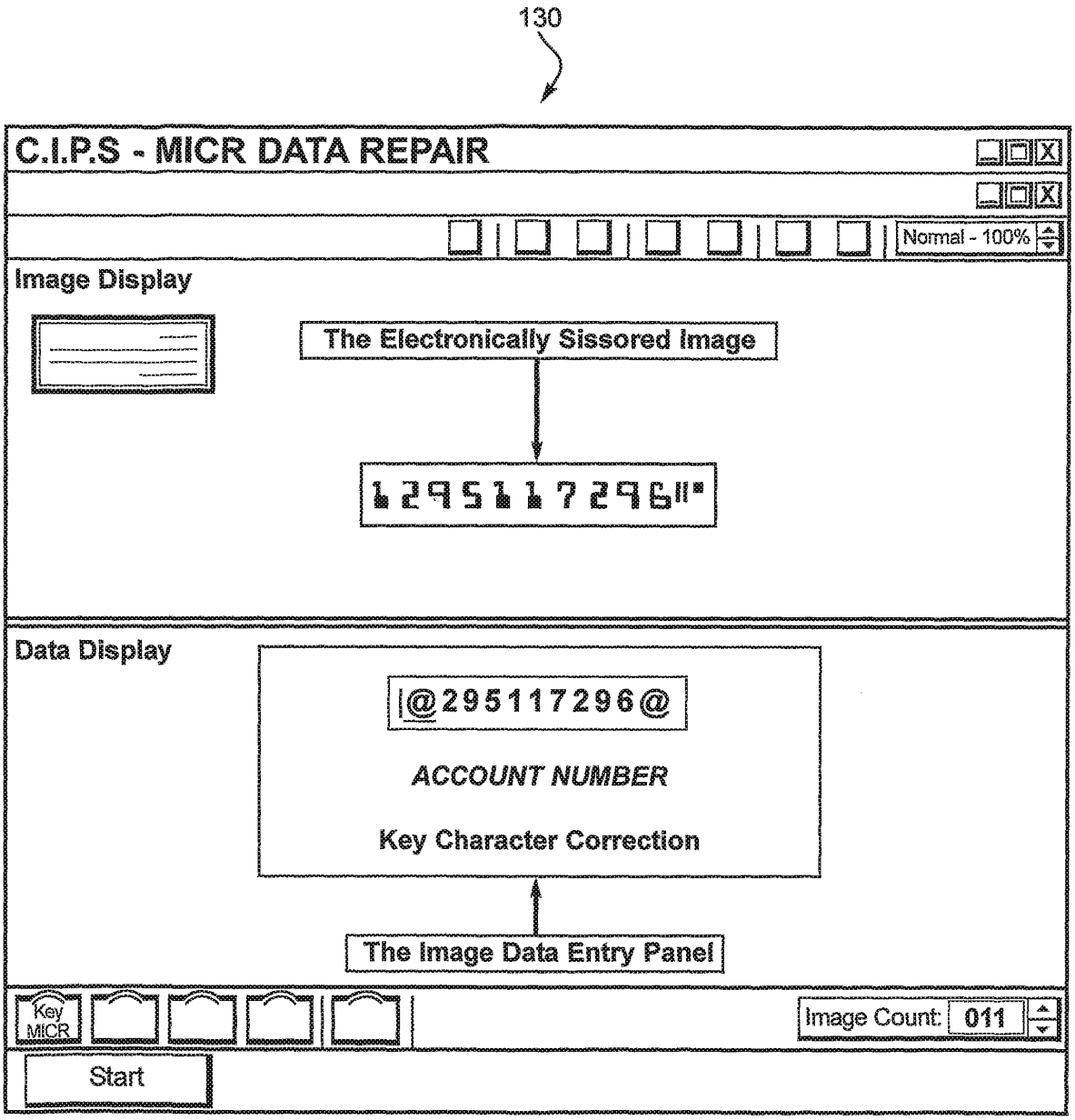
130
C.I.P.S - MICR DATA REPAIR
Normal - 100%
Image Display
The Electronically Sissored Image
Data Display
|@295117296@
ACCOUNT NUMBER
Key Character Correction
The Image Data Entry Panel
Key MICR
Image Count: 011
Start

Fig. 11

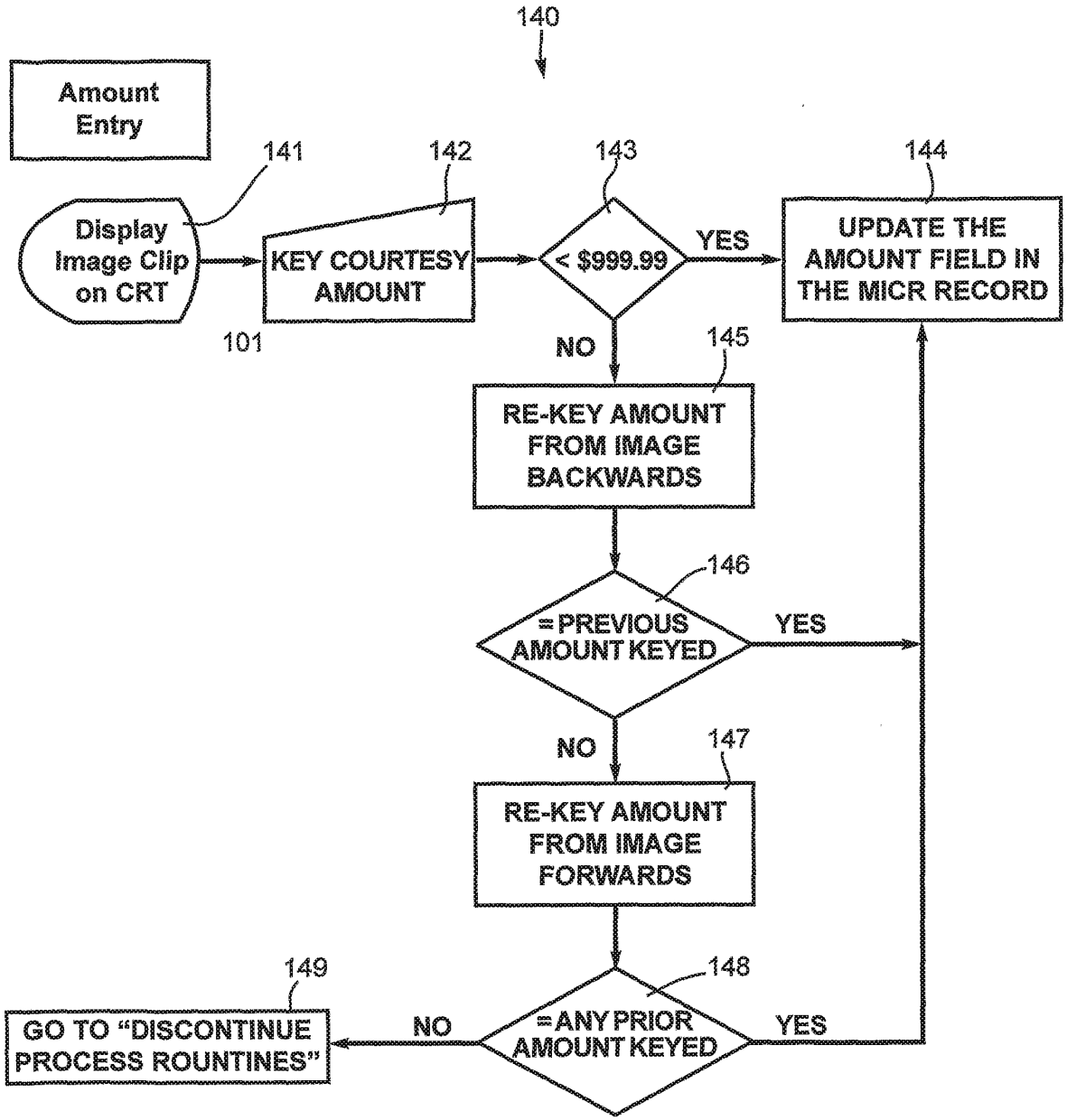
140
Amount Entry
141
142
143
144
Display Image Clip on CRT
KEY COURTESY AMOUNT
< $999.99
YES
UPDATE THE AMOUNT FIELD IN THE MICR RECORD
101
NO
145
RE-KEY AMOUNT FROM IMAGE BACKWARDS
146
= PREVIOUS AMOUNT KEYED
YES
NO
147
RE-KEY AMOUNT FROM IMAGE FORWARDS
149
148
GO TO "DISCONTINUE PROCESS ROUNTINES"
NO
= ANY PRIOR AMOUNT KEYED
YES

Fig. 12

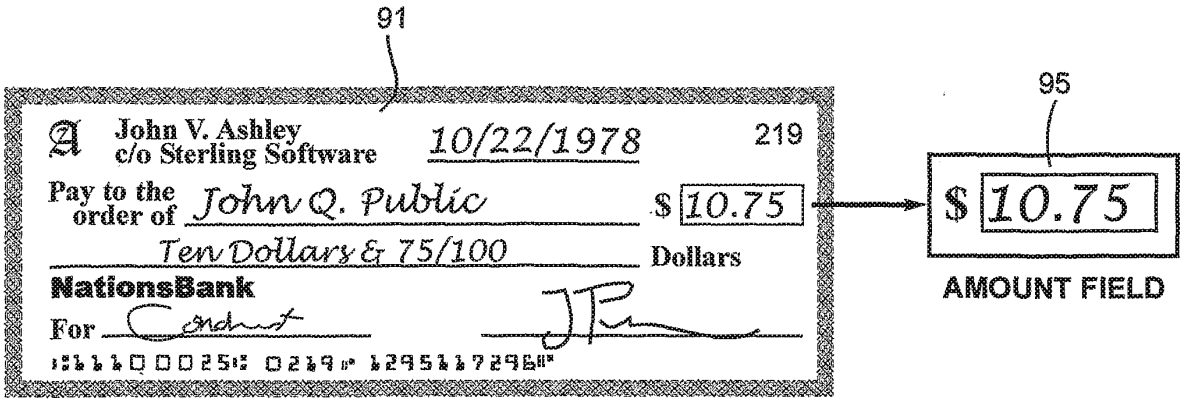

Fig. 13

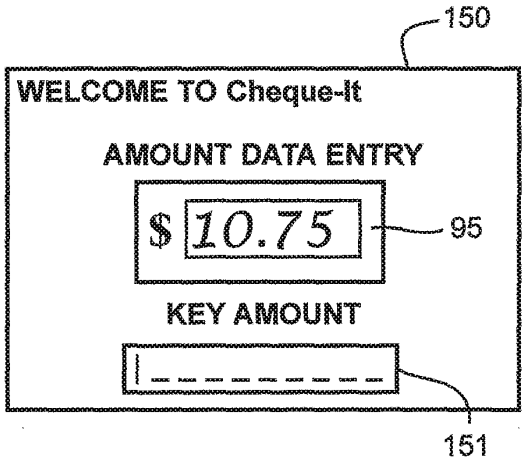

Fig. 14

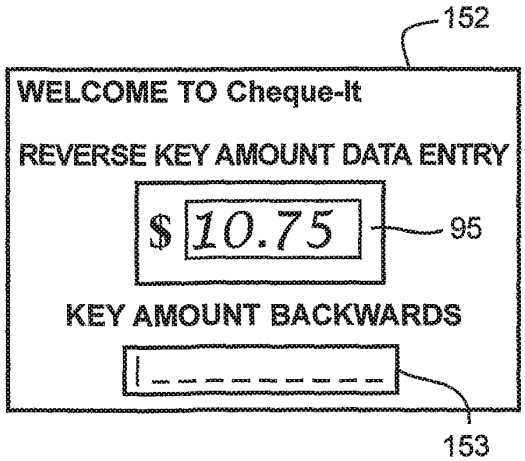

Fig. 15

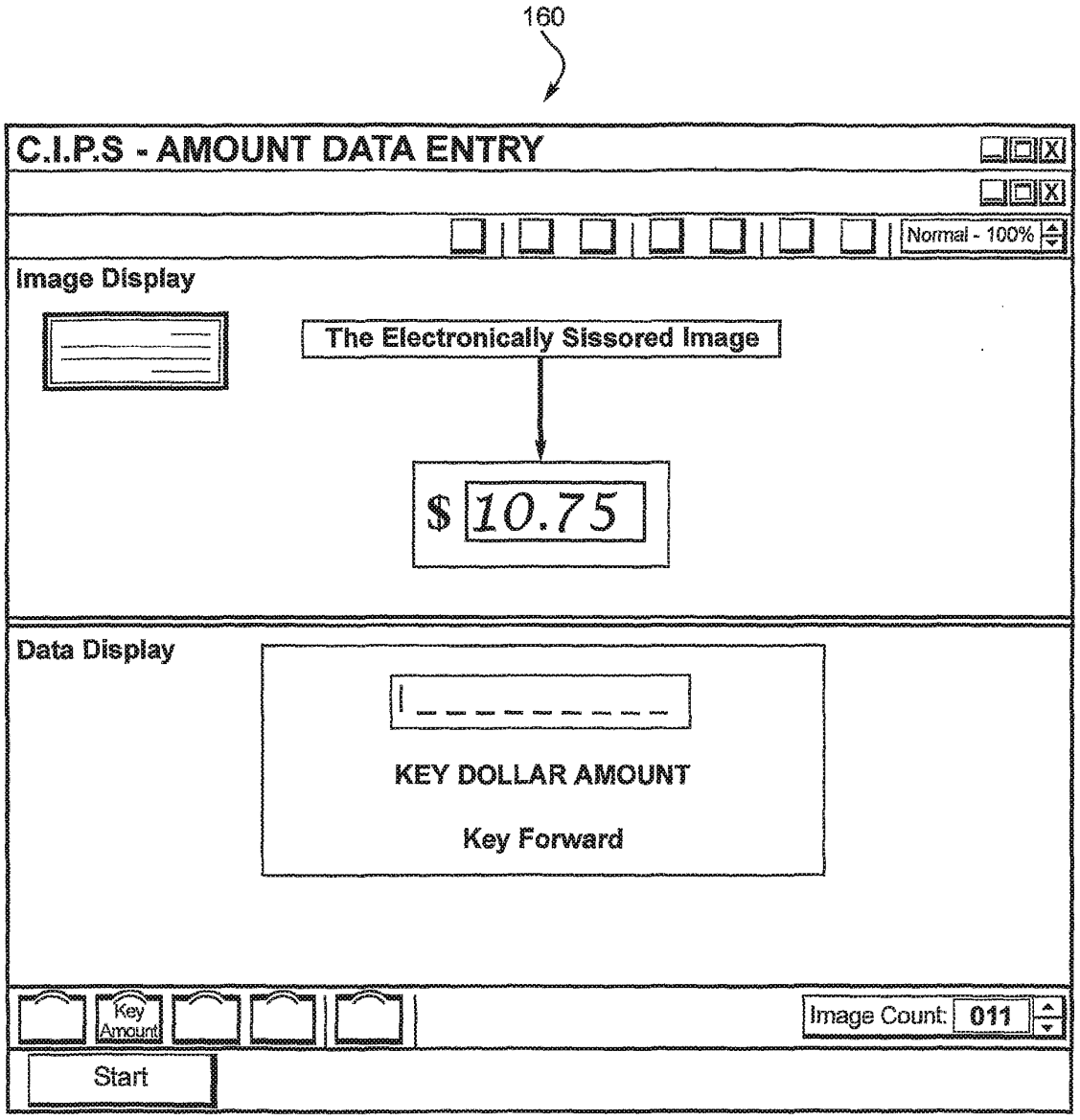
160
C.I.P.S - AMOUNT DATA ENTRY
Normal - 100%
Image Display
The Electronically Sissored Image
$ 10.75
Data Display
KEY DOLLAR AMOUNT
Key Forward
Key Amount
Image Count: 011
Start

Fig. 16

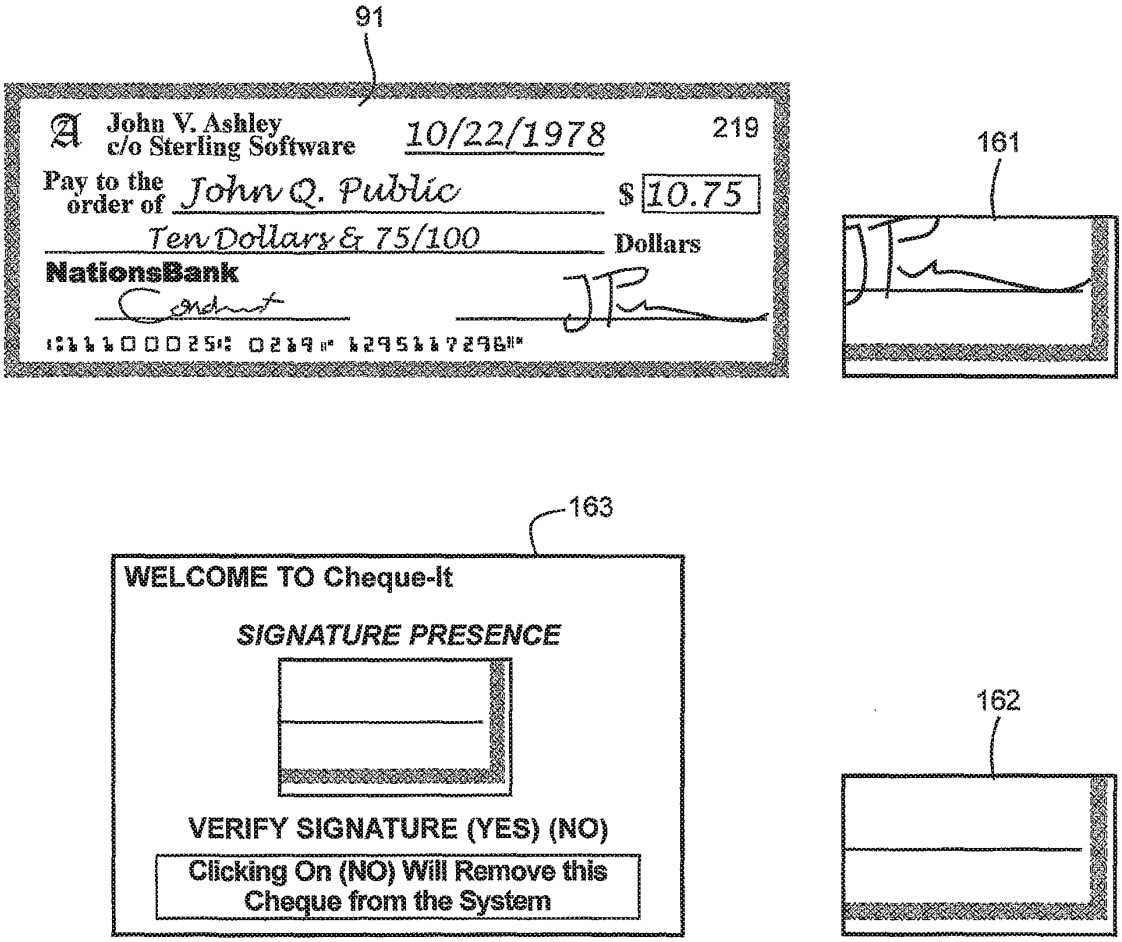
91
John V. Ashley
c/o Sterling Software
10/22/1978
219
Pay to the order of
John Q. Public
$ 10.75
Ten Dollars & 75/100
Dollars
NationsBank
161
163
WELCOME TO Cheque-It
SIGNATURE PRESENCE
VERIFY SIGNATURE (YES) (NO)
Clicking On (NO) Will Remove this Cheque from the System
162

Fig. 17

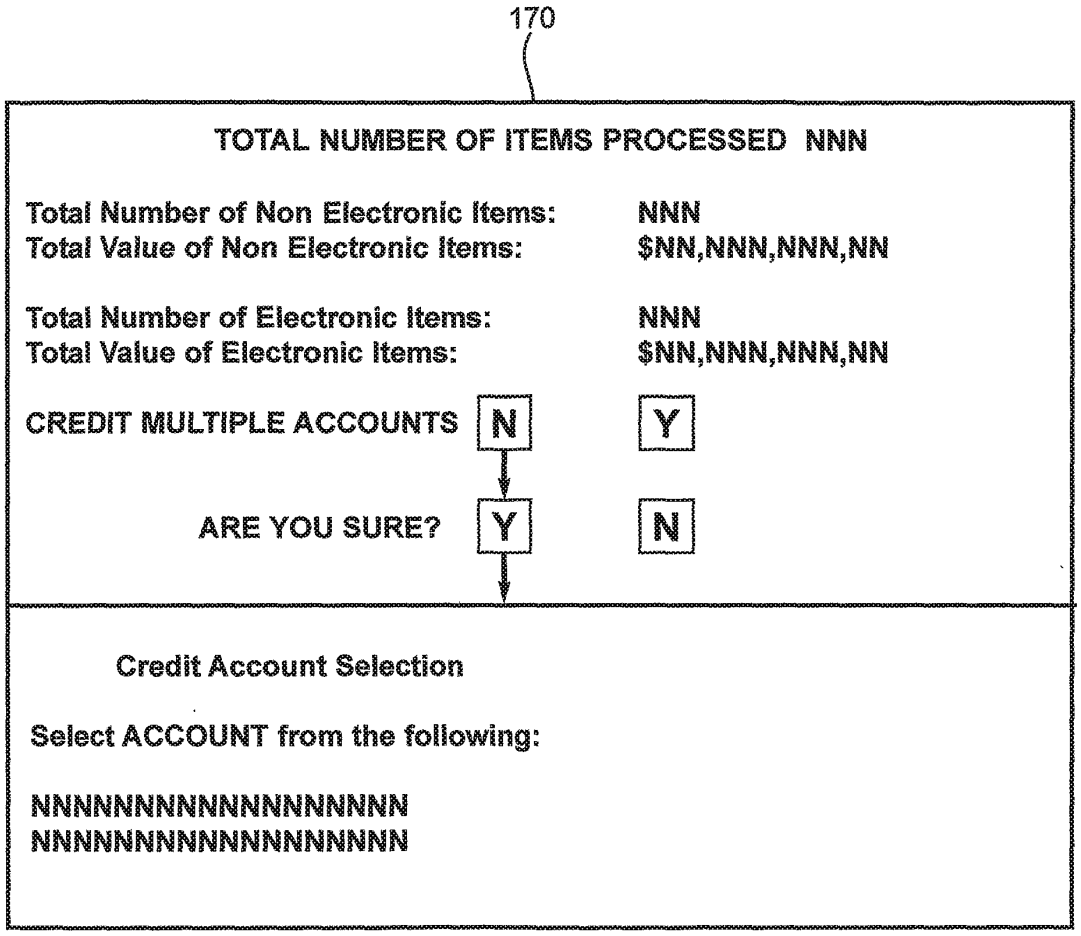
170
TOTAL NUMBER OF ITEMS PROCESSED NNN
Total Number of Non Electronic Items: NNN
Total Value of Non Electronic Items: $NN,NNN,NNN,NN
Total Number of Electronic Items: NNN
Total Value of Electronic Items: $NN,NNN,NNN,NN
CREDIT MULTIPLE ACCOUNTS N Y
ARE YOU SURE? Y N
Credit Account Selection
Select ACCOUNT from the following:
NNNNNNNNNNNNNNNNNN
NNNNNNNNNNNNNNNNNN

Fig. 18

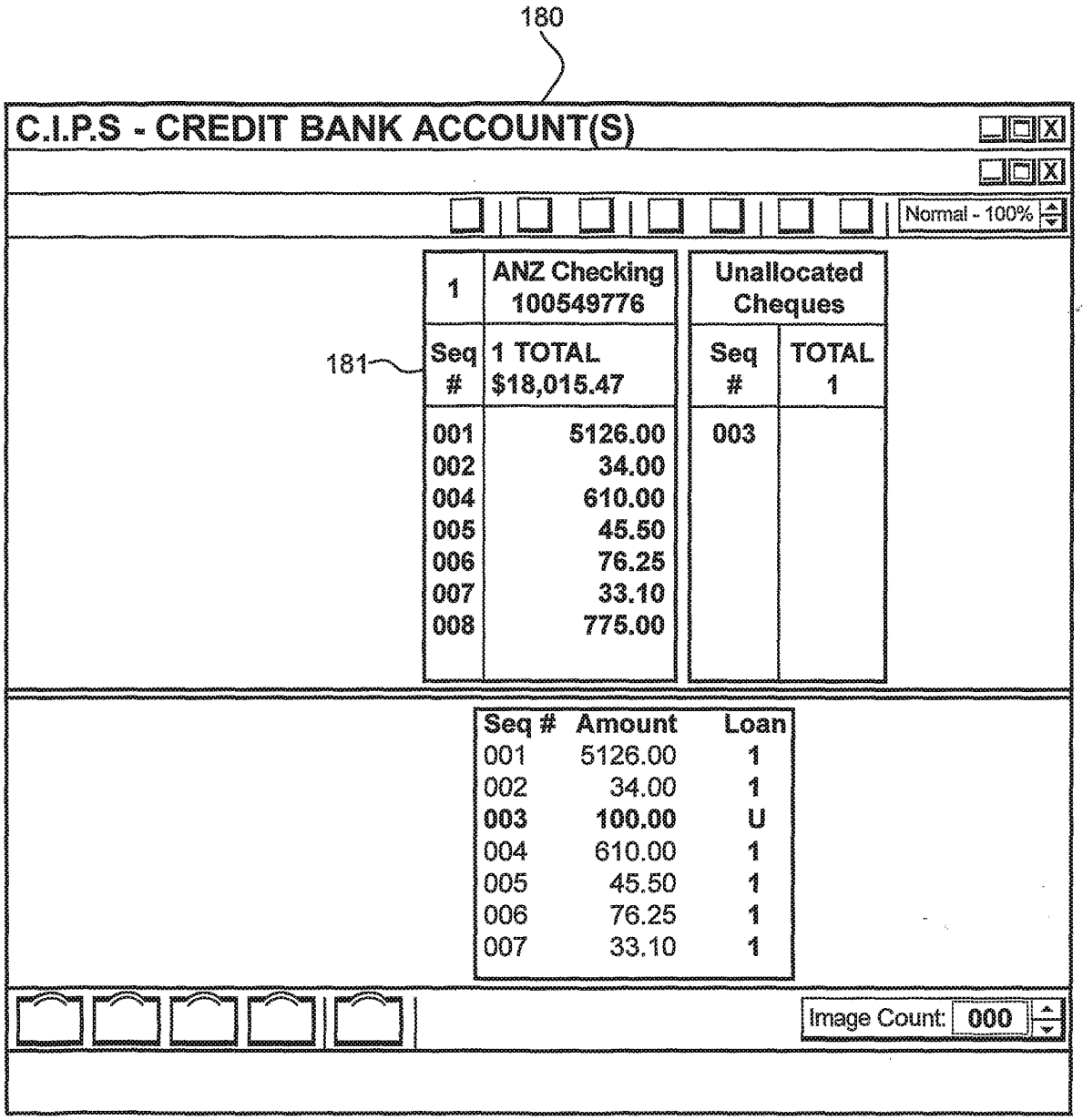
180
C.I.P.S - CREDIT BANK ACCOUNT(S)
Normal - 100%
181
1
ANZ Checking 100549776
Unallocated Cheques
Seq #
1 TOTAL $18,015.47
Seq #
TOTAL 1
001 5126.00
002 34.00
004 610.00
005 45.50
006 76.25
007 33.10
008 775.00
003
Seq # Amount Loan
001 5126.00 1
002 34.00 1
003 100.00 U
004 610.00 1
005 45.50 1
006 76.25 1
007 33.10 1
Image Count: 000

Fig. 19

190

C.I.P.S - SINGLE BANK ACCOUNT CREDIT MANAGER

191

Normal - 100%

1	ANZ Checking 100549776					Unallocated Cheques	
Seq #	1 TOTAL $18,015.47	Seq #		Seq #		Seq #	TOTAL 1
001	5126.00	009	10.00	016	45.98	003	
002	34.00	010	3110.00	017	1965.00		
004	610.00	011	29.95	018	1010.80		
005	45.50	012	45.00	019	332.43		
006	76.25	013	1090.50				
007	33.10	014	15.16				
008	775.00	015	3750.80				

Seq #	Amount	Loan	Seq #	Amount	Loan	Seq #	Amount	Loan
001	5126.00	1	008	775.00	1	015	3750.80	1
002	34.00	1	009	10.00	1	016	45.98	1
003	100.00	U	010	3110.00	1	017	1965.00	1
004	610.00	1	011	29.95	1	018	1010.80	1
005	45.50	1	012	45.00	1	019	332.43	1
006	76.25	1	013	1090.50	1	020		
007	33.10	1	014	15.16	1	021		

Image Count: 000

Fig. 20

200

C.I.P.S - MULTIPLE BANK ACCOUNT CREDIT MANAGER

201

Normal - 100%

1	ANZ Checking 100549776	2	ANZ Savings 213887610	3	ANZ Loan 334021076	Unallocated Cheques	
Seq #	1 TOTAL $1,249.48	Seq #	2 TOTAL $16,129.35	Seq #	3 TOTAL $726.64	Seq #	TOTAL 1
002	34.00	001	5126.00	004	610.00	003	
007	33.10	006	76.25	005	45.50		
008	775.00	010	3110.00	014	15.16		
011	29.95	013	1090.50	016	45.98		
012	45.00	015	3750.80				
019	332.43	017	1965.00				
		018	1010.80				

Seq #	Amount	Loan	Seq #	Amount	Loan	Seq #	Amount	Loan
001	5126.00	2	008	775.00	1	015	3750.80	2
002	34.00	1	009	10.00	3	016	45.98	3
003	100.00	U	010	3110.00	2	017	1965.00	2
004	610.00	3	011	29.95	1	018	1010.80	2
005	45.50	3	012	45.00	1	019	332.43	1
006	76.25	2	013	1090.50	2	020		
007	33.10	1	014	15.16	3	021		

Image Count: 000

Fig. 21

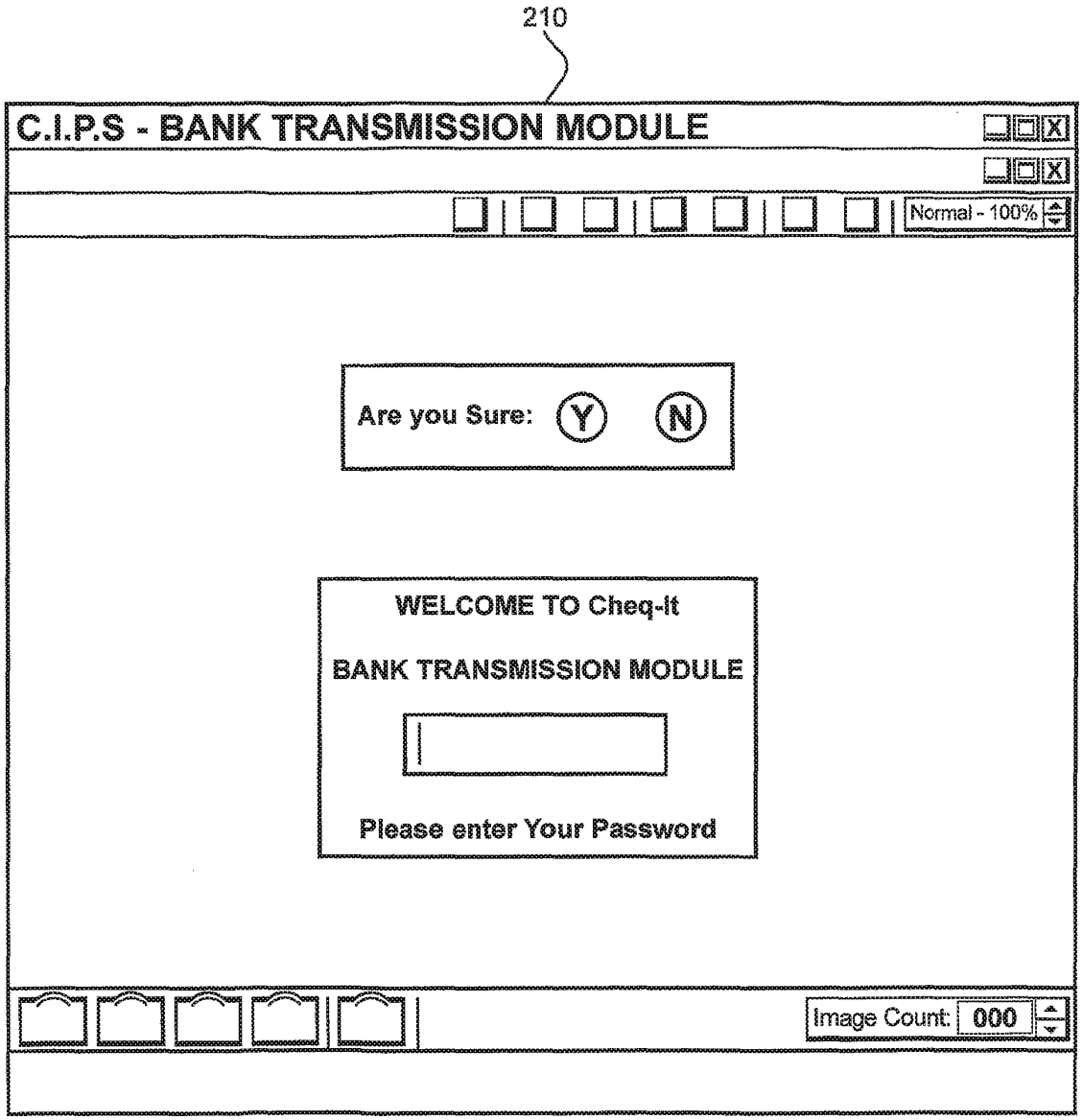
210
C.I.P.S - BANK TRANSMISSION MODULE
Normal - 100%
Are you Sure:
Y
N
WELCOME TO Cheq-It
BANK TRANSMISSION MODULE
Please enter Your Password
Image Count:
000

Fig. 22

INTERNATIONAL SEARCH REPORT

International application No.
PCT/AU03/00858

A. CLASSIFICATION OF SUBJECT MATTER

Int. Cl. [7]: G06F 17/60, 157:00

According to International Patent Classification (IPC) or to both national classification and IPC

B. FIELDS SEARCHED

Minimum documentation searched (classification system followed by classification symbols)

Documentation searched other than minimum documentation to the extent that such documents are included in the fields searched

Electronic data base consulted during the international search (name of data base and, where practicable, search terms used)
WPAT and Keywords (bank, financ+, match, scan)

C. DOCUMENTS CONSIDERED TO BE RELEVANT

Category*	Citation of document, with indication, where appropriate, of the relevant passages	Relevant to claim No.
X	EP 1045348 A2 (NCR International Inc.) 18 October 2000 Whole Document	1 to 28
A	US 5895455 A (Bellinger et al.) 20 April 1999 Whole Document	
A	WO 98/57291 A2 (DIRECT EXPRESS) 17 December 1998 Whole Document	

☐ Further documents are listed in the continuation of Box C ☒ See patent family annex

* Special categories of cited documents:

"A" document defining the general state of the art which is not considered to be of particular relevance

"E" earlier application or patent but published on or after the international filing date

"L" document which may throw doubts on priority claim(s) or which is cited to establish the publication date of another citation or other special reason (as specified)

"O" document referring to an oral disclosure, use, exhibition or other means

"P" document published prior to the international filing date but later than the priority date claimed

"T" later document published after the international filing date or priority date and not in conflict with the application but cited to understand the principle or theory underlying the invention

"X" document of particular relevance; the claimed invention cannot be considered novel or cannot be considered to involve an inventive step when the document is taken alone

"Y" document of particular relevance; the claimed invention cannot be considered to involve an inventive step when the document is combined with one or more other such documents, such combination being obvious to a person skilled in the art

"&" document member of the same patent family

Date of the actual completion of the international search	Date of mailing of the international search report
23 July 2003	01 AUG 2003
Name and mailing address of the ISA/AU	Authorized officer
AUSTRALIAN PATENT OFFICE PO BOX 200, WODEN ACT 2606, AUSTRALIA E-mail address: pct@ipaustralia.gov.au Facsimile No. (02) 6285 3929	**J.W. THOMSON** Telephone No : (02) 6283 2214

Form PCT/ISA/210 (second sheet) (July 1998)

INTERNATIONAL SEARCH REPORT

Information on patent family members

International application No.
PCT/AU03/00858

This Annex lists the known "A" publication level patent family members relating to the patent documents cited in the above-mentioned international search report. The Australian Patent Office is in no way liable for these particulars which are merely given for the purpose of information.

Patent Document Cited in Search Report		Patent Family Member					
EP	1045348	AU	200027735	NZ	503920	US	6585775
WO	9857291	EP	996923	US	6097834		
US	5895455	US	5870725	US	6023705		

END OF ANNEX

CERTIFICATE OF EFS FILING UNDER 37 CFR §1.8

I hereby certify that this correspondence is being electronically transmitted to the United States Patent and Trademark Office, Commissioner for Patents, via the EFS pursuant to 37 CFR §1.8 on the below date:

Date: October 23, 2019 Name: Patricia Chiovari Signature: /Patricia Chiovari/

BRINKS GILSON & LIONE 100 YEARS OF IP LAW

SUPPLEMENTAL INFORMATION DISCLOSURE STATEMENT BY APPLICANT (Not for submission under 37 CFR 1.99)		
	Application Number	16/507,595
	Filing Date	July 10, 2019
	First Named Inventor	Charles Lee Oakes
	Art Unit	3693
	Confirmation Number	4037
	Examiner Name	TBA
	Attorney Docket No.	US-0152.11 | 14538-668

In accordance with the duty of disclosure, Applicant(s) hereby cites the following references:

PATENT REFERENCES

EXAMINER INITIAL		DOCUMENT NUMBER Number-Kind Code (if known)	DATE	NAME
	C1	4,896,363	01/23/1990	Taylor et al.
	C2	6,064,753	05/16/2000	Bolle et al.
	C3	7,240,336	07/03/2007	Baker
	C4	8,000,514	08/16/2011	Nepomniachtchi et al.
	C5	10,402,638	09/03/2019	Oakes, III et al.

FOREIGN PATENT REFERENCES

EXAMINER INITIAL		DOCUMENT NUMBER Number-Kind Code (if known)	DATE	COUNTRY	TRANSLATION YES OR NO
	C6	CN 1897644 A	01/17/2007	China	Abstract
	C7	WO 2004/008350 A1	01/22/2004	WIPO	

OTHER ART – NON PATENT LITERATURE DOCUMENTS

EXAMINER INITIAL	Include name of author, title of the article (when appropriate), title of the item (book, magazine, journal, serial, symposium, catalog, etc.), date, page(s), volume-issue number(s), publisher, city and/or country where published.	
	C8	Defendant Wells Fargo Bank, N.A.'s Second Amended Answer, Affirmative Defenses, and Counterclaims To Plaintiff's Amended Complaint, United Services Automobile Association v. Wells Fargo Bank, N.A., Civil Action No. 2:18-cv-245, dated August 1, 2019, 72 pgs.
	C9	Claim Construction Memorandum Opinion and Order, United Services Automobile Association v. Wells Fargo Bank, N.A., Civil Action No. 2:18-cv-366, dated July 29, 2019, 36 pgs.

Examiner Signature		Date Considered	

EXAMINER INITIAL	Include name of author, title of the article (when appropriate), title of the item (book, magazine, journal, serial, symposium, catalog, etc.), date, page(s), volume-issue number(s), publisher, city and/or country where published.	
	C10	Wells Fargo's Objections To Magistrate Judge Payne's Claim Construction Memorandum Opinion and Order, United Services Automobile Association v. Wells Fargo Bank, N.A., Civil Action No. 2:18-cv-366, dated August 12, 2019, 7 pgs.
	C11	USAA's Objections To Magistrate Judge Payne's Claim Construction Memorandum Opinion and Order, United Services Automobile Association v. Wells Fargo Bank, N.A., Civil Action No. 2:18-cv-366, dated August 12, 2019, 10 pgs.
	C12	IPR2019-00815 Patent No. 9,818,090, Petitioner's Reply Brief to Patent Owner Preliminary Response Pursuant To Authorization Provided In Paper No. 13, dated August 1, 2019, 9 pgs.
	C13	IPR2019-00815 Patent No. 9,818,090, Petitioner's Supplemental Exhibit List, dated August 1, 2019, 5 pgs.
	C14	IPR2019-00815 Patent No. 9,818,090, United Services Automobile Association ('USAA")'s Sur-Reply In Support of Patent Owner Preliminary Response, dated August 8, 2019, 8 pgs.
	C15	IPR2019-00815 Patent No. 9,818,090, Decision Denying Institution of Inter *Parties* Review, dated August 26, 2019, 28 pgs.

1. PRIORITY INFORMATION:

☐ This application claims priority under 35 USC §120 to the following United States patent application(s):_____. In accordance with 37 CFR §1.98(d), copies of the references cited herein which were submitted to, or cited by, the office, in compliance with 37 CFR §1.98(a)-(c) in the earlier application are not provided herewith. The Examiner is directed to those references cited in all Information Disclosure Statements filed in the priority United States patent application(s) cited above in addition to the references cited herein.

2. CERTIFICATIONS: (CHECK ALL THAT APPLY)

A. <u>Certifications For 37 CFR §1.97(c) or 37 CFR §1.97(d):</u>

☐ Applicant hereby certifies pursuant to 37 CFR §1.97(e)(1) that each item of information in this Information Disclosure Statement was first cited in any communication from a foreign patent office in a counterpart foreign application not more than three months prior to the filing of this Information Disclosure Statement.

☐ Applicant hereby certifies pursuant to 37 CFR §1.97(e)(2) that no item of information contained in this Information Disclosure Statement was cited in a communication from a foreign patent office in a counterpart foreign application, and, to the knowledge of the undersigned after making reasonable inquiry, no item of information contained in this Statement was known to any individual designated in 37 CFR §1.56(c), more than three months prior to the filing of this Information Disclosure Statement.

B. <u>For Patent Term Adjustment Purposes:</u>

☐ For purposes of 37 CFR §1.704(d)(i) or 37 CFR §1.704(d)(ii), Applicant is hereby submitting concurrently with this Information Disclosure Statement a completed Form PTO/SB/133 that certifies that each item of information contained in this Information Disclosure Statement was first cited in any communication from a patent office in a counterpart foreign or international application or from the Office or is a communication that was issued by a patent office in a counterpart foreign or international application or by the Office, and that this communication was not received by any individual designated in 37 CFR §1.56(c) more than thirty days prior to the filing of this Information Disclosure Statement.

Examiner Signature		Date Considered	

3. FEE INFORMATION: (CHECK IF FEE REQUIRED)

☐ Applicant has calculated a processing fee in the amount of _____ to be due under 37 CFR §1.17(p) in connection with the filing of this Information Disclosure Statement. Applicant authorizes charging the fee to Deposit Account 50-4184.

☒ The Director is hereby authorized to charge any fee deficiency associated with the filing of this Information Disclosure Statement to Deposit Account 50-4184.

Pursuant to the undersigned attorney's obligation and duties under 37 CFR §§ 1.56 and 1.98(a)(3) and (c), either English language abstracts, partial translations, or full translations are included for patent documents which are not in English for the express purpose of providing a concise explanation of the references to the Patent and Trademark Office with the opportunity to evaluate the same. Applicant respectfully requests the Examiner's consideration of the above reference(s) and entry thereof into the record of this application.

By submitting this Statement, Applicant is attempting to fully comply with the duty of candor and good faith mandated by 37 CFR §1.56. As such, this Statement is not intended to constitute an admission that any of the enclosed references, or other information referred to therein, constitutes "prior art" or is otherwise "material to patentability," as that phrase is defined in 37 CFR §1.56(a).

Respectfully submitted,

October 23, 2019
Date

Kent E. Genin (Reg. No. 37,834)

Examiner Signature		Date Considered	

Electronic Acknowledgement Receipt

EFS ID:	37540562
Application Number:	16507595
International Application Number:	
Confirmation Number:	4037
Title of Invention:	DIGITAL CAMERA PROCESSING SYSTEM
First Named Inventor/Applicant Name:	Charles Lee Oakes
Customer Number:	16530
Filer:	Kent E. Genin/Juan Garibay
Filer Authorized By:	Kent E. Genin
Attorney Docket Number:	US-0152.11(14538-668)
Receipt Date:	23-OCT-2019
Filing Date:	10-JUL-2019
Time Stamp:	16:17:01
Application Type:	Utility under 35 USC 111(a)

Payment information:

Submitted with Payment	no

File Listing:

Document Number	Document Description	File Name	File Size(Bytes)/ Message Digest	Multi Part /.zip	Pages (if appl.)
1		14538_668_IDSC_Filing_102319.pdf	469311 377c9abf7dcaacdce7729ab69f6d928fe5c42ed2	yes	4

	Multipart Description/PDF files in .zip description		
	Document Description	**Start**	**End**
	Information Disclosure Statement (IDS) Form (SB08)	2	4
	Miscellaneous Incoming Letter	1	1

Warnings:					
Information:					
2	Foreign Reference	1-CN-1897644-A-c.pdf	4543719 6e3aad246373861c168b58ebaa0fbaf3356e5cbf	no	22
Warnings:					
Information:					
3	Foreign Reference	1-WO-2004008350A1-c.pdf	5650738 8091a9dedaedc10109fc7ec82716b54e167e4009	no	48
Warnings:					
Information:					
4	Non Patent Literature	2-CV245-WellsFargoSecondAmendedAnswer-c.pdf	4224432 7a92ebf72ed76fbce61b7f5ef7ff29a1a84e4696	no	72
Warnings:					
Information:					
5	Non Patent Literature	4-CV366-ClaimConstructionMemorandumOpinionOrder-c.pdf	408812 8e8fac6a514144fe3fb25095607927824ef785fc	no	36
Warnings:					
Information:					
6	Non Patent Literature	5-CV366-WellsFargoObjectionsToMemoOpinion-c.pdf	160606 f14f464cab4cc3a69adbf5130ecb295b4626b156	no	7
Warnings:					
Information:					
7	Non Patent Literature	6-CV366-USAAsObjectionClaimConstruction-c.pdf	195199 7348471829ced031086b05421e0fd65eca90aa63	no	10
Warnings:					

Information:					
8	Non Patent Literature	7-IPR2019-00815_PetitionerReplyBrief-POPR-c.pdf	126556 b70249ceb85922d6aacac5fac547b958e2d6ac8c	no	9
Warnings:					
Information:					
9	Non Patent Literature	8-IPR2019-00815_PetitionersSuppl-ExhibitList-c.pdf	100975 79c4179d9cf74bc83ccc7eaf099ff0757e4903af	no	5
Warnings:					
Information:					
10	Non Patent Literature	9-IPR2019-00815-USAA_PatentOwners-Sur-Reply-c.pdf	149737 bebc6d2f5631bd890afdbadd6df4b83a7a2b5ec0	no	8
Warnings:					
Information:					
11	Non Patent Literature	10-IPR2019-00815_Decision-Denying-Review.pdf	291280 06732f42f132ad0370b5ed9b2fe6ba7765ab820b	no	28
Warnings:					
Information:					
			Total Files Size (in bytes):	16321365	

This Acknowledgement Receipt evidences receipt on the noted date by the USPTO of the indicated documents, characterized by the applicant, and including page counts, where applicable. It serves as evidence of receipt similar to a Post Card, as described in MPEP 503.

<u>New Applications Under 35 U.S.C. 111</u>
If a new application is being filed and the application includes the necessary components for a filing date (see 37 CFR 1.53(b)-(d) and MPEP 506), a Filing Receipt (37 CFR 1.54) will be issued in due course and the date shown on this Acknowledgement Receipt will establish the filing date of the application.
<u>National Stage of an International Application under 35 U.S.C. 371</u>
If a timely submission to enter the national stage of an international application is compliant with the conditions of 35 U.S.C. 371 and other applicable requirements a Form PCT/DO/EO/903 indicating acceptance of the application as a national stage submission under 35 U.S.C. 371 will be issued in addition to the Filing Receipt, in due course.
<u>New International Application Filed with the USPTO as a Receiving Office</u>
If a new international application is being filed and the international application includes the necessary components for an international filing date (see PCT Article 11 and MPEP 1810), a Notification of the International Application Number and of the International Filing Date (Form PCT/RO/105) will be issued in due course, subject to prescriptions concerning national security, and the date shown on this Acknowledgement Receipt will establish the international filing date of the application.

CERTIFICATE OF EFS FILING UNDER 37 CFR §1.8

I hereby certify that this correspondence is being electronically transmitted to the United States Patent and Trademark Office, Commissioner for Patents, via the EFS pursuant to 37 CFR §1.8 on the below date:

Date: October 23, 2019 Name: Patricia Chiovari Signature: /Patricia Chiovari/

BRINKS GILSON & LIONE 100 YEARS OF IP LAW

IN THE UNITED STATES PATENT AND TRADEMARK OFFICE

In re Appln. of: Charles Lee Oakes et al.			
Appln. No.:	16/507,595	Examiner:	I. Jung Liu
Filed:	July 10, 2019	Art Unit:	3697
For:	DIGITAL CAMERA PROCESSING SYSTEM	Conf. No.:	4037
Attorney Docket No.: US-0152.11 | 14538-668			

TRANSMITTAL

Commissioner for Patents
PO Box 1450
Alexandria, VA 22313-1450

Sir:

Attached is/are:

☒ Supplemental Information Disclosure Statement; and References C6-C15.

Fee calculation:

☒ No additional fee is required.

☐ Per 37 CFR §1.27, ☐ Applicant is small entity ☐ Applicant is micro entity.

☐ An extension fee in an amount of $___ for a __-month extension of time under 37 CFR § 1.136(a).

☐ A petition or processing fee in an amount of $_____ under 37 CFR § 1.1_____(_____).

☐ An additional filing fee has been calculated as shown below:

					Fee		Small Entity Fee		Micro Entity Fee	
	Claims Remaining After Amendment		Highest No. Previously Paid	Present Extra	Rate	Add'l Fee	Rate	Add'l Fee	Rate	Add'l Fee
Total		Minus			x $100 =	$	x $ 50 =	$	x $25 =	$
Independent		Minus			x $460 =	$	x $230 =	$	x $115 =	$
First Presentation of Multiple Dep. Claim					+ $820 =	$	+ $410 =	$	+ $205 =	$
					Total	$	Total	$	Total	$

Fee payment:

☐ Please charge Deposit Account No. 50-4184 in the amount of $_____ for _____.

☐ Payment by credit card in the amount of $_____ (Form PTO-2038 is attached).
WARNING: Information on this form may become public. **Credit card information should not be included on this form.**

☒ The Director is hereby authorized to charge payment of any additional filing fees required under 37 CFR § 1.16 and any patent application processing fees under 37 CFR § 1.17 (including any extension fee required to ensure that this paper is timely filed), or to credit any overpayment, to Deposit Account No. 50-4184.

Respectfully submitted,

October 23, 2019
Date

Kent E. Genin (Reg. No. 37,834)

BRINKS GILSON & LIONE
NBC Tower – Suite 3600, 455 N. Cityfront Plaza Drive, Chicago, IL 60611-5599

UNITED STATES PATENT AND TRADEMARK OFFICE

UNITED STATES DEPARTMENT OF COMMERCE
United States Patent and Trademark Office
Address: COMMISSIONER FOR PATENTS
P.O. Box 1450
Alexandria, Virginia 22313-1450
www.uspto.gov

APPLICATION NUMBER	FILING or 371(c) DATE	GRP ART UNIT	FIL FEE REC'D	ATTY.DOCKET.NO	TOT CLAIMS	IND CLAIMS
16/507,595	07/10/2019	3693	1880	US-0152.11(14538-668)	20	3

CONFIRMATION NO. 4037

UPDATED FILING RECEIPT

16530
BGL
P.O. Box 10395
Chicago, IL 60610

OC000000111492168

Date Mailed: 09/27/2019

Receipt is acknowledged of this non-provisional utility patent application. The application will be taken up for examination in due course. Applicant will be notified as to the results of the examination. Any correspondence concerning the application must include the following identification information: the U.S. APPLICATION NUMBER, FILING DATE, NAME OF FIRST INVENTOR, and TITLE OF INVENTION. Fees transmitted by check or draft are subject to collection.

Please verify the accuracy of the data presented on this receipt. If an error is noted on this Filing Receipt, please submit a written request for a corrected Filing Receipt, including a properly marked-up ADS showing the changes with strike-through for deletions and underlining for additions. If you received a "Notice to File Missing Parts" or other Notice requiring a response for this application, please submit any request for correction to this Filing Receipt with your reply to the Notice. When the USPTO processes the reply to the Notice, the USPTO will generate another Filing Receipt incorporating the requested corrections provided that the request is grantable.

Inventor(s)

Charles Lee Oakes III, San Antonio, TX;
Randy Ray Morlen, San Antonio, TX;
Michael Frank Morris, San Antonio, TX;
Reynaldo Medina III, San Antonio, TX;
Greg Alan Harpel, San Antonio, TX;
Gabriel Glenn Gavia, San Antonio, TX;
Bharat Prasad, San Antonio, TX;
Frank Kyle Major, San Antonio, TX;
Jeffrey Neal Pollack, San Antonio, TX;

Applicant(s)

United Services Automobile Association (USAA), San Antonio, TX;

Assignment For Published Patent Application

United Services Automobile Association (USAA), San Antonio, TX

Power of Attorney: The patent practitioners associated with Customer Number 16530

Domestic Priority data as claimed by applicant

This application is a CON of 16/165,622 10/19/2018 PAT 10402638
which is a CON of 16/025,679 07/02/2018
which is a CON of 14/225,090 03/25/2014
and is a CON of 15/663,284 07/28/2017 PAT 10013605
which is a CON of 14/225,090 03/25/2014
which is a CON of 11/590,974 10/31/2006 PAT 8708227

Foreign Applications for which priority is claimed (You may be eligible to benefit from the **Patent Prosecution Highway** program at the USPTO. Please see http://www.uspto.gov for more information.) - None.
Foreign application information must be provided in an Application Data Sheet in order to constitute a claim to foreign priority. See 37 CFR 1.55 and 1.76.

Permission to Access Application via Priority Document Exchange: Yes

Permission to Access Search Results: Yes

Applicant may provide or rescind an authorization for access using Form PTO/SB/39 or Form PTO/SB/69 as appropriate.

If Required, Foreign Filing License Granted: 07/23/2019

The country code and number of your priority application, to be used for filing abroad under the Paris Convention, is **US 16/507,595**

Projected Publication Date: Request for Non-Publication Acknowledged

Non-Publication Request: Yes

Early Publication Request: No
Title

DIGITAL CAMERA PROCESSING SYSTEM

Preliminary Class

705

Statement under 37 CFR 1.55 or 1.78 for AIA (First Inventor to File) Transition Applications: No

PROTECTING YOUR INVENTION OUTSIDE THE UNITED STATES

Since the rights granted by a U.S. patent extend only throughout the territory of the United States and have no effect in a foreign country, an inventor who wishes patent protection in another country must apply for a patent in a specific country or in regional patent offices. Applicants may wish to consider the filing of an international application under the Patent Cooperation Treaty (PCT). An international (PCT) application generally has the same effect as a regular national patent application in each PCT-member country. The PCT process **simplifies** the filing of patent applications on the same invention in member countries, but **does not result** in a grant of "an international patent" and does not eliminate the need of applicants to file additional documents and fees in countries where patent protection is desired.

Almost every country has its own patent law, and a person desiring a patent in a particular country must make an application for patent in that country in accordance with its particular laws. Since the laws of many countries differ in various respects from the patent law of the United States, applicants are advised to seek guidance from specific foreign countries to ensure that patent rights are not lost prematurely.

Applicants also are advised that in the case of inventions made in the United States, the Director of the USPTO must issue a license before applicants can apply for a patent in a foreign country. The filing of a U.S. patent application serves as a request for a foreign filing license. The application's filing receipt contains further information and guidance as to the status of applicant's license for foreign filing.

Applicants may wish to consult the USPTO booklet, "General Information Concerning Patents" (specifically, the section entitled "Treaties and Foreign Patents") for more information on timeframes and deadlines for filing foreign patent applications. The guide is available either by contacting the USPTO Contact Center at 800-786-9199, or it can be viewed on the USPTO website at http://www.uspto.gov/web/offices/pac/doc/general/index.html.

For information on preventing theft of your intellectual property (patents, trademarks and copyrights), you may wish to consult the U.S. Government website, http://www.stopfakes.gov. Part of a Department of Commerce initiative, this website includes self-help "toolkits" giving innovators guidance on how to protect intellectual property in specific countries such as China, Korea and Mexico. For questions regarding patent enforcement issues, applicants may call the U.S. Government hotline at 1-866-999-HALT (1-866-999-4258).

LICENSE FOR FOREIGN FILING UNDER

Title 35, United States Code, Section 184

Title 37, Code of Federal Regulations, 5.11 & 5.15

GRANTED

The applicant has been granted a license under 35 U.S.C. 184, if the phrase "IF REQUIRED, FOREIGN FILING LICENSE GRANTED" followed by a date appears on this form. Such licenses are issued in all applications where the conditions for issuance of a license have been met, regardless of whether or not a license may be required as set forth in 37 CFR 5.15. The scope and limitations of this license are set forth in 37 CFR 5.15(a) unless an earlier license has been issued under 37 CFR 5.15(b). The license is subject to revocation upon written notification. The date indicated is the effective date of the license, unless an earlier license of similar scope has been granted under 37 CFR 5.13 or 5.14.

This license is to be retained by the licensee and may be used at any time on or after the effective date thereof unless it is revoked. This license is automatically transferred to any related applications(s) filed under 37 CFR 1.53(d). This license is not retroactive.

The grant of a license does not in any way lessen the responsibility of a licensee for the security of the subject matter as imposed by any Government contract or the provisions of existing laws relating to espionage and the national security or the export of technical data. Licensees should apprise themselves of current regulations especially with respect to certain countries, of other agencies, particularly the Office of Defense Trade Controls, Department of State (with respect to Arms, Munitions and Implements of War (22 CFR 121-128)); the Bureau of Industry and Security, Department of Commerce (15 CFR parts 730-774); the Office of Foreign AssetsControl, Department of Treasury (31 CFR Parts 500+) and the Department of Energy.

NOT GRANTED

No license under 35 U.S.C. 184 has been granted at this time, if the phrase "IF REQUIRED, FOREIGN FILING LICENSE GRANTED" DOES NOT appear on this form. Applicant may still petition for a license under 37 CFR 5.12, if a license is desired before the expiration of 6 months from the filing date of the application. If 6 months has lapsed from the filing date of this application and the licensee has not received any indication of a secrecy order under 35 U.S.C. 181, the licensee may foreign file the application pursuant to 37 CFR 5.15(b).

SelectUSA

The United States represents the largest, most dynamic marketplace in the world and is an unparalleled location for business investment, innovation, and commercialization of new technologies. The U.S. offers tremendous resources and advantages for those who invest and manufacture goods here. Through SelectUSA, our nation works to promote and facilitate business investment. SelectUSA provides information assistance to the international investor community; serves as an ombudsman for existing and potential investors; advocates on behalf of U.S. cities, states, and regions competing for global investment; and counsels U.S. economic development organizations on investment attraction best practices. To learn more about why the United States is the best country in the world to develop technology, manufacture products, deliver services, and grow your business, visit http://www.SelectUSA.gov or call +1-202-482-6800.

PATENT APPLICATION FEE DETERMINATION RECORD Substitute for Form PTO-875	Application or Docket Number 16/507,595

APPLICATION AS FILED - PART I

FOR	(Column 1) NUMBER FILED	(Column 2) NUMBER EXTRA	SMALL ENTITY RATE($)	SMALL ENTITY FEE($)	OR	OTHER THAN SMALL ENTITY RATE($)	OTHER THAN SMALL ENTITY FEE($)
BASIC FEE (37 CFR 1.16(a), (b), or (c))	N/A	N/A	N/A			N/A	300
SEARCH FEE (37 CFR 1.16(k), (i), or (m))	N/A	N/A	N/A			N/A	660
EXAMINATION FEE (37 CFR 1.16(o), (p), or (q))	N/A	N/A	N/A			N/A	760
TOTAL CLAIMS (37 CFR 1.16(i))	20 minus 20 =	*			OR	x 100 =	0.00
INDEPENDENT CLAIMS (37 CFR 1.16(h))	3 minus 3 =	*				x 460 =	0.00
APPLICATION SIZE FEE (37 CFR 1.16(s))	If the specification and drawings exceed 100 sheets of paper, the application size fee due is $310 ($155 for small entity) for each additional 50 sheets or fraction thereof. See 35 U.S.C. 41(a)(1)(G) and 37 CFR 1.16(s).						0.00
MULTIPLE DEPENDENT CLAIM PRESENT (37 CFR 1.16(j))							0.00
* If the difference in column 1 is less than zero, enter "0" in column 2.			TOTAL			TOTAL	1720

APPLICATION AS AMENDED - PART II

		(Column 1) CLAIMS REMAINING AFTER AMENDMENT		(Column 2) HIGHEST NUMBER PREVIOUSLY PAID FOR	(Column 3) PRESENT EXTRA	SMALL ENTITY RATE($)	SMALL ENTITY ADDITIONAL FEE($)	OR	OTHER THAN SMALL ENTITY RATE($)	OTHER THAN SMALL ENTITY ADDITIONAL FEE($)
AMENDMENT A	Total (37 CFR 1.16(i))	*	Minus	**	=	x =		OR	x =	
AMENDMENT A	Independent (37 CFR 1.16(h))	*	Minus	***	=	x =		OR	x =	
AMENDMENT A	Application Size Fee (37 CFR 1.16(s))									
AMENDMENT A	FIRST PRESENTATION OF MULTIPLE DEPENDENT CLAIM (37 CFR 1.16(j))							OR		
						TOTAL ADD'L FEE		OR	TOTAL ADD'L FEE	

		(Column 1) CLAIMS REMAINING AFTER AMENDMENT		(Column 2) HIGHEST NUMBER PREVIOUSLY PAID FOR	(Column 3) PRESENT EXTRA	RATE($)	ADDITIONAL FEE($)		RATE($)	ADDITIONAL FEE($)
AMENDMENT B	Total (37 CFR 1.16(i))	*	Minus	**	=	x =		OR	x =	
AMENDMENT B	Independent (37 CFR 1.16(h))	*	Minus	***	=	x =		OR	x =	
AMENDMENT B	Application Size Fee (37 CFR 1.16(s))									
AMENDMENT B	FIRST PRESENTATION OF MULTIPLE DEPENDENT CLAIM (37 CFR 1.16(j))							OR		
						TOTAL ADD'L FEE		OR	TOTAL ADD'L FEE	

* If the entry in column 1 is less than the entry in column 2, write "0" in column 3.
** If the "Highest Number Previously Paid For" IN THIS SPACE is less than 20, enter "20".
*** If the "Highest Number Previously Paid For" IN THIS SPACE is less than 3, enter "3".
The "Highest Number Previously Paid For" (Total or Independent) is the highest found in the appropriate box in column 1.

BRINKS GILSON & LIONE
100 YEARS OF IP LAW

CERTIFICATE OF EFS FILING UNDER 37 CFR §1.8

I hereby certify that this correspondence is being electronically transmitted to the United States Patent and Trademark Office, Commissioner for Patents, via the EFS pursuant to 37 CFR §1.8 on the below date:
Date: September 25, 2019 Name: Patricia Chiovari Signature: /Patricia Chiovari/

IN THE UNITED STATES PATENT AND TRADEMARK OFFICE

In re Appln. of:	Charles Lee Oakes III, et al.		
Appln. No.:	16/507,595	Examiner:	To be assigned
Filed:	July 10, 2019	Art Unit:	3693
For:	DIGITAL CAMERA PROCESSING SYSTEM	Conf. No.:	4037
Attorney Docket No.:	US-0152.11 | 14538-668		

SECOND PRELIMINARY AMENDMENT

Commissioner for Patents
P.O. Box 1450
Alexandria, VA 22313-1450

Dear Sir:

Further to the Preliminary Amendment filed July 10, 2019, and prior to examining this application, please enter the following amendment and consider the following remarks:

AMENDMENTS TO THE CLAIMS

The following listing of claims will replace all prior versions and listings of claims in the application.

Listing of Claims

1. – 24. (Canceled)

25. (New) A system for allowing a customer to deposit a check using a customer's own handheld mobile device, the system including:

a customer's handheld mobile device including a downloaded app, the downloaded app associated with a bank and causing the customer's handheld mobile device to:

receive input entered by the customer indicating an amount of the check;

use a display of the customer's handheld mobile device to assist the customer in having a digital camera take a photo of the check;

assist the customer as to an orientation for taking the photo; and

using a wireless network, transmit a copy of the photo over the Internet from the customer's handheld mobile device to the bank;

a bank computer programmed to:

check for errors in the check in the photo by:

performing optical character recognition on the check in the photo to determine an amount shown on the check, and

comparing the amount shown to the amount entered by the customer; and

the system being configured to update a balance of an account after determining that no errors were found in the check in the photo.

26. (New) The system of claim 25, wherein the bank computer is configured to confirm that mobile deposit of the check can proceed after duplicate detection is performed on the check in the photo.

27. (New) The system of claim 26, wherein the system is configured to initiate the mobile deposit of the check after bank computer confirms that the mobile deposit can proceed.

28. (New) The system of claim 25, wherein the system is configured to perform the update the balance after it is determined that a mark or signature is present in an endorsement location in the photo of a back side of the check.

29. (New) The system of claim 25, wherein use of the display of the customer's handheld mobile device to assist the customer includes instructing the customer to have the digital camera take a photo of a front side of the check and a photo of a back side of the check.

30. (New) The system of claim 25, wherein the system is configured to convert the photo into a bi-tonal Tag Image File Format (TIFF).

31. (New) The system of claim 25, wherein the customer's handheld mobile device further includes camera software that controls a customer's digital camera, the camera software being separate from the downloaded app, the downloaded app at least partially controlling the camera software.

32. (New) The system of claim 25, wherein the downloaded app manages taking the photo.

33. (New) The system of claim 25, wherein the downloaded app instructs the customer to place the check in front of the digital camera before taking the photo.

34. (New) The system of claim 25, wherein the system is configured to generate a log file for the mobile deposit of the check, wherein the log file includes an image of the check submitted for mobile deposit of the check.

35. (New) The system of claim 25, wherein the copy of the photo is a modified version of the photo taken with the digital camera.

36. (New) The system of claim 35, wherein the copy of the photo has a different format than the photo taken with the digital camera.

37. (New) The system of claim 25, further comprising a third-party vendor computer.

38. (New) A system for allowing a customer to deposit a check using a customer's own handheld mobile device with a digital camera, the system configured to authenticate the customer using data representing a customer fingerprint, the system including:

a customer's handheld mobile device including:

camera software that controls the digital camera; and

a downloaded app associated with a bank to control the camera software and to control submitting a check for deposit by causing the customer's handheld mobile device to perform the following steps:

instructing the customer to have the digital camera take photos of front and back sides of the check;

using a display of the customer's handheld mobile device to assist the customer in having the digital camera take the photos of the check;

assisting the customer as to an orientation for taking the photos;

receiving input from the customer indicating an amount of the check; and

using a wireless cellular network, transmitting a copy of the photos over the Internet from the customer's handheld mobile device and submitting the check for mobile check deposit in the bank after the photos of the check are presented to the customer;

a computer associated with the bank programmed to update a balance of an account to reflect the check submitted for mobile check deposit by the customer's handheld mobile device; and

the system configured to perform additional steps including:

confirming that the mobile check deposit can go forward after optical character recognition is performed on the check, the optical character recognition determining an amount of the check, performing duplicate detection, and comparing the determined amount to the amount indicated by the customer;

and

generating a log file for the mobile check deposit, the log file including an image of the check submitted for mobile check deposit.

39. (New) The system of claim 38, wherein the digital camera is separate from the customer's handheld mobile device.

40. (New) The system of claim 38, wherein the customer's handheld mobile device is a Personal Digital Assistant (PDA).

41. (New) A system for allowing a customer to deposit a check using a customer's own handheld mobile device, the system including:

a bank computer programmed to update a balance of an account to reflect an amount of a check submitted for mobile check deposit by the customer's handheld mobile device, the customer's handheld mobile device including a downloaded app, the downloaded app associated with a bank and causing the customer's handheld mobile device to perform:

receiving input entered by the customer indicating an amount of the check;

using a display of the customer's handheld mobile device to assist the customer in having a digital camera take a photo of the check,

assisting the customer as to an orientation for taking the photo, and

after taking the photo, using a wireless network, transmitting a copy of the photo over the Internet from the customer's handheld mobile device and submitting the check for mobile check deposit in the bank;

and

the system being configured to update the balance of the account after optical character recognition reads a Magnetic Ink Character Recognition (MICR) line of the check in the photo.

42. (New) The system of claim 41, wherein the digital camera is separate from the customer's handheld mobile device.

43. (New) The system of claim 41, wherein the downloaded app manages taking the photo.

44. (New) The system of claim 41, wherein the system is configured to generate a log file for the mobile check deposit, wherein the log file includes an image of the check submitted for mobile check deposit.

Electronic Acknowledgement Receipt	
EFS ID:	37273531
Application Number:	16507595
International Application Number:	
Confirmation Number:	4037
Title of Invention:	DIGITAL CAMERA PROCESSING SYSTEM
First Named Inventor/Applicant Name:	Charles Lee Oakes
Customer Number:	16530
Filer:	Kent E. Genin/Carlos Jimenez
Filer Authorized By:	Kent E. Genin
Attorney Docket Number:	US-0152.11(14538-668)
Receipt Date:	25-SEP-2019
Filing Date:	10-JUL-2019
Time Stamp:	16:49:09
Application Type:	Utility under 35 USC 111(a)

Payment information:

Submitted with Payment	yes
Payment Type	DA
Payment was successfully received in RAM	$1880
RAM confirmation Number	E20199OG49276169
Deposit Account	
Authorized User	
The Director of the USPTO is hereby authorized to charge indicated fees and credit any overpayment as follows:	

File Listing:

Document Number	Document Description	File Name	File Size(Bytes)/ Message Digest	Multi Part /.zip	Pages (if appl.)
1		14538_668_PrelimAmendResponsetoMP_092519.pdf	604402 7c90b4fdf79889d92a6e9d39b35abd105d0cc165	yes	11

Multipart Description/PDF files in .zip description

Document Description	Start	End
Miscellaneous Incoming Letter	1	1
Applicant Response to Pre-Exam Formalities Notice	2	3
Preliminary Amendment	4	4
Claims	5	10
Applicant Arguments/Remarks Made in an Amendment	11	11

Warnings:

Information:

2	Fee Worksheet (SB06)	fee-info.pdf	37127 2b56cbd9cf7fa9ebb81f8e5bbd5070020cba7d86	no	2

Warnings:

Information:

Total Files Size (in bytes):	641529

This Acknowledgement Receipt evidences receipt on the noted date by the USPTO of the indicated documents, characterized by the applicant, and including page counts, where applicable. It serves as evidence of receipt similar to a Post Card, as described in MPEP 503.

New Applications Under 35 U.S.C. 111
If a new application is being filed and the application includes the necessary components for a filing date (see 37 CFR 1.53(b)-(d) and MPEP 506), a Filing Receipt (37 CFR 1.54) will be issued in due course and the date shown on this Acknowledgement Receipt will establish the filing date of the application.
National Stage of an International Application under 35 U.S.C. 371
If a timely submission to enter the national stage of an international application is compliant with the conditions of 35 U.S.C. 371 and other applicable requirements a Form PCT/DO/EO/903 indicating acceptance of the application as a national stage submission under 35 U.S.C. 371 will be issued in addition to the Filing Receipt, in due course.
New International Application Filed with the USPTO as a Receiving Office
If a new international application is being filed and the international application includes the necessary components for an international filing date (see PCT Article 11 and MPEP 1810), a Notification of the International Application Number and of the International Filing Date (Form PCT/RO/105) will be issued in due course, subject to prescriptions concerning national security, and the date shown on this Acknowledgement Receipt will establish the international filing date of the application.

Electronic Acknowledgement Receipt	
EFS ID:	37273418
Application Number:	16507595
International Application Number:	
Confirmation Number:	4037
Title of Invention:	DIGITAL CAMERA PROCESSING SYSTEM
First Named Inventor/Applicant Name:	Charles Lee Oakes
Customer Number:	16530
Filer:	Kent E. Genin/Carlos Jimenez
Filer Authorized By:	Kent E. Genin
Attorney Docket Number:	US-0152.11(14538-668)
Receipt Date:	25-SEP-2019
Filing Date:	10-JUL-2019
Time Stamp:	16:41:31
Application Type:	Utility under 35 USC 111(a)

Payment information:

Submitted with Payment	yes
Payment Type	CARD
Payment was successfully received in RAM	$200
RAM confirmation Number	E20199OG41525972
Deposit Account	
Authorized User	
The Director of the USPTO is hereby authorized to charge indicated fees and credit any overpayment as follows:	

File Listing:

Document Number	Document Description	File Name	File Size(Bytes)/ Message Digest	Multi Part /.zip	Pages (if appl.)
1	Extension of Time	14538_668_ExtofTime_092519.pdf	265861 1a3a34e73b4f52cd75e05d563fb3dbf165ce6d6c	no	2
Warnings:					
Information:					
2	Fee Worksheet (SB06)	fee-info.pdf	31079 52f55830da2ea95d7cbbba569535b17e07cb0019	no	2
Warnings:					
Information:					
		Total Files Size (in bytes):	296940		

This Acknowledgement Receipt evidences receipt on the noted date by the USPTO of the indicated documents, characterized by the applicant, and including page counts, where applicable. It serves as evidence of receipt similar to a Post Card, as described in MPEP 503.

New Applications Under 35 U.S.C. 111
If a new application is being filed and the application includes the necessary components for a filing date (see 37 CFR 1.53(b)-(d) and MPEP 506), a Filing Receipt (37 CFR 1.54) will be issued in due course and the date shown on this Acknowledgement Receipt will establish the filing date of the application.
National Stage of an International Application under 35 U.S.C. 371
If a timely submission to enter the national stage of an international application is compliant with the conditions of 35 U.S.C. 371 and other applicable requirements a Form PCT/DO/EO/903 indicating acceptance of the application as a national stage submission under 35 U.S.C. 371 will be issued in addition to the Filing Receipt, in due course.
New International Application Filed with the USPTO as a Receiving Office
If a new international application is being filed and the international application includes the necessary components for an international filing date (see PCT Article 11 and MPEP 1810), a Notification of the International Application Number and of the International Filing Date (Form PCT/RO/105) will be issued in due course, subject to prescriptions concerning national security, and the date shown on this Acknowledgement Receipt will establish the international filing date of the application.