US007027171B1

(12) **United States Patent**
Watanabe

(10) **Patent No.: US 7,027,171 B1**
(45) **Date of Patent: Apr. 11, 2006**

(54) **DIGITAL CAMERA AND DOCUMENT PHOTOGRAPHING AND TRANSMITTING METHOD OF THE SAME**

(75) Inventor: **Yoshikazu Watanabe**, Tokyo (JP)

(73) Assignee: **Ricoh Company, Ltd.**, Tokyo (JP)

(*) Notice: Subject to any disclaimer, the term of this patent is extended or adjusted under 35 U.S.C. 154(b) by 0 days.

(21) Appl. No.: **09/537,405**

(22) Filed: **Mar. 29, 2000**

(30) **Foreign Application Priority Data**

Mar. 30, 1999 (JP) 11-090224
Jan. 20, 2000 (JP) 2000-012217

(51) **Int. Cl.**
G06K 1/00 (2006.01)
G06F 15/00 (2006.01)

(52) **U.S. Cl.** **358/1.15**; 358/488; 382/112; 382/164

(58) **Field of Classification Search** 358/1.15, 358/18, 488, 1.14; 355/18; 396/429, 55, 396/229, 266; 382/313, 317, 318, 321, 112, 382/164, 289, 488; 399/1, 38
See application file for complete search history.

(56) **References Cited**

U.S. PATENT DOCUMENTS

6,167,469 A * 12/2000 Safai et al. 710/62
6,304,313 B1 * 10/2001 Honma 355/18
2001/0015760 A1 * 8/2001 Fellegara et al. 348/333.01

FOREIGN PATENT DOCUMENTS

JP	2-21782	1/1990
JP	6-256907	9/1994
JP	7-212707	8/1995
JP	7-336581	12/1995
JP	8-125870	5/1996
JP	9-23375	1/1997
JP	10-3109	1/1998
JP	10-65867	3/1998
JP	10-336574	12/1998
JP	11-46331	2/1999
JP	11084482 A *	3/1999

* cited by examiner

Primary Examiner—Gabriel Garcia
Assistant Examiner—Thierry L. Pham
(74) *Attorney, Agent, or Firm*—Oblon, Spivak, McClelland, Maier & Neustadt, P.C.

(57) **ABSTRACT**

An image processing section provided in a digital camera converts the image photographed in a document photographing mode to any data format that a destination (a facsimile or a personal computer) selected by a user requires.

61 Claims, 12 Drawing Sheets

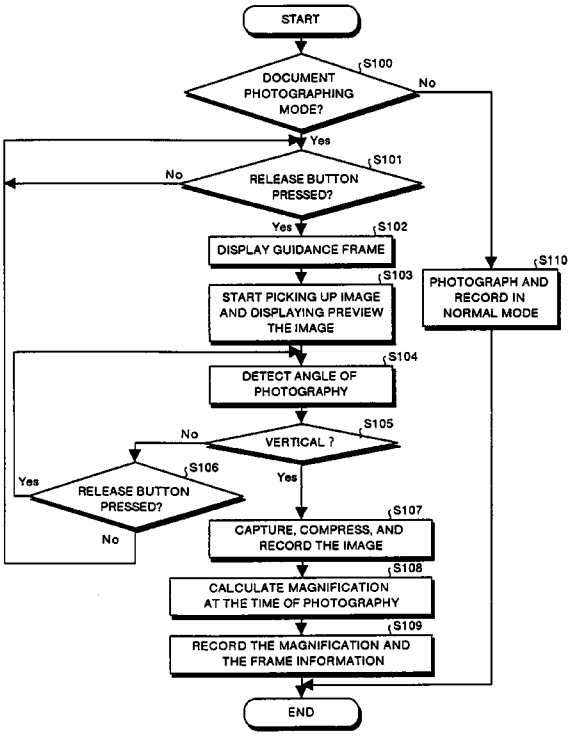

TRUIST EXHIBIT 1007

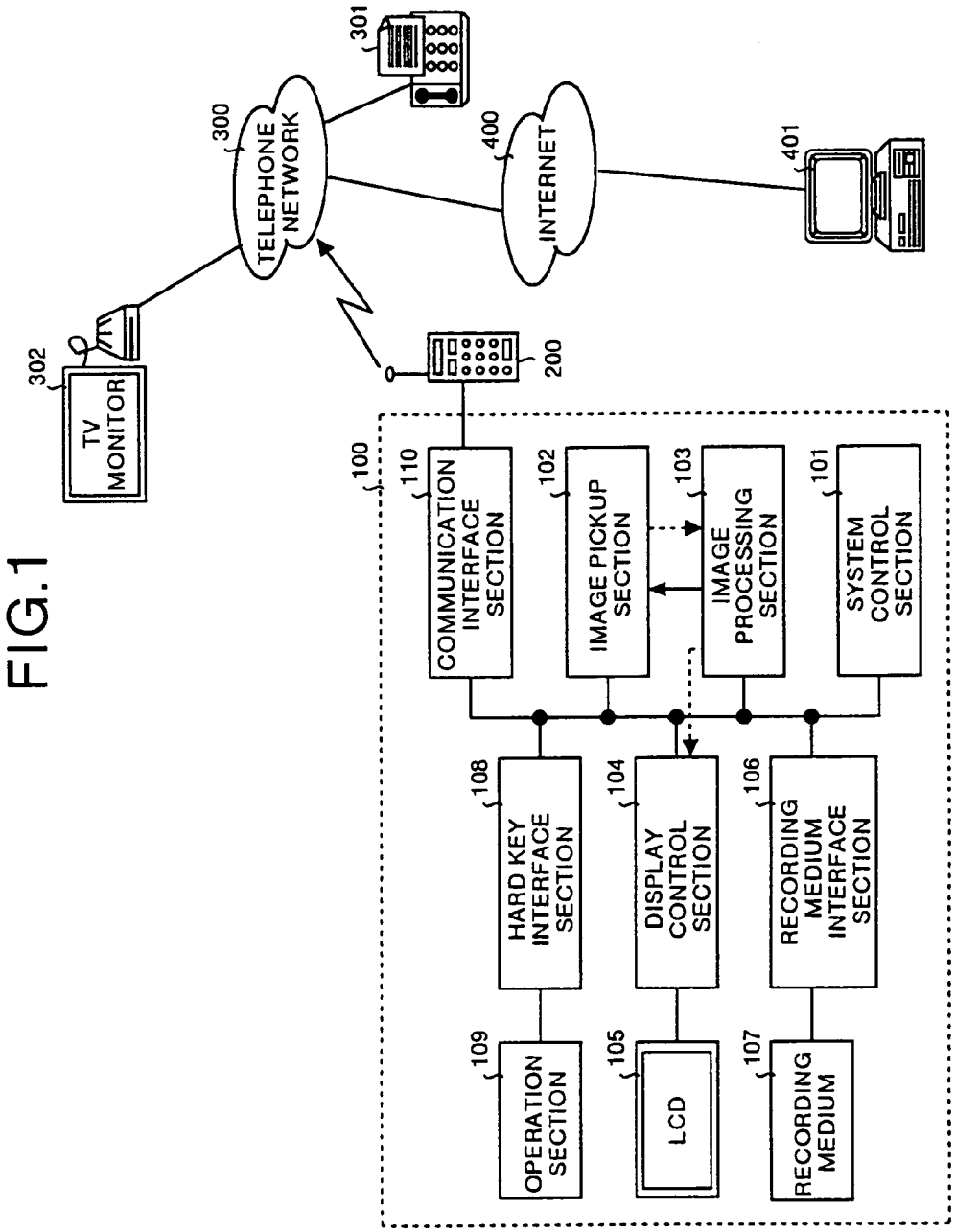
TV MONITOR
302
TELEPHONE NETWORK
300
301
INTERNET
400
401
200
100
COMMUNICATION INTERFACE SECTION
110
IMAGE PICKUP SECTION
102
IMAGE PROCESSING SECTION
103
SYSTEM CONTROL SECTION
101
HARD KEY INTERFACE SECTION
108
DISPLAY CONTROL SECTION
104
RECORDING MEDIUM INTERFACE SECTION
106
OPERATION SECTION
109
LCD
105
RECORDING MEDIUM
107

FIG.1

FIG.2

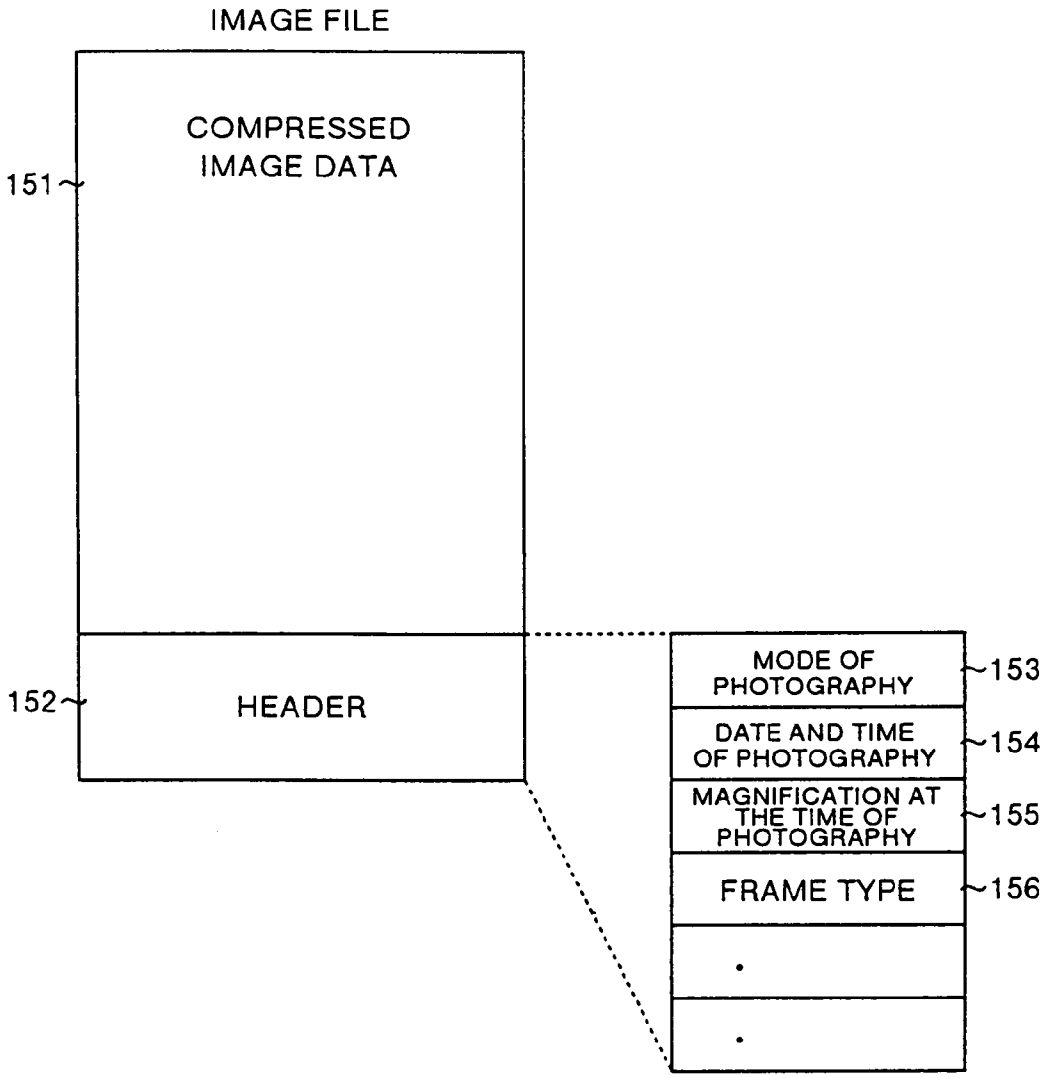
IMAGE FILE
COMPRESSED IMAGE DATA
151
152
HEADER
MODE OF PHOTOGRAPHY
153
DATE AND TIME OF PHOTOGRAPHY
154
MAGNIFICATION AT THE TIME OF PHOTOGRAPHY
155
FRAME TYPE
156

FIG.3

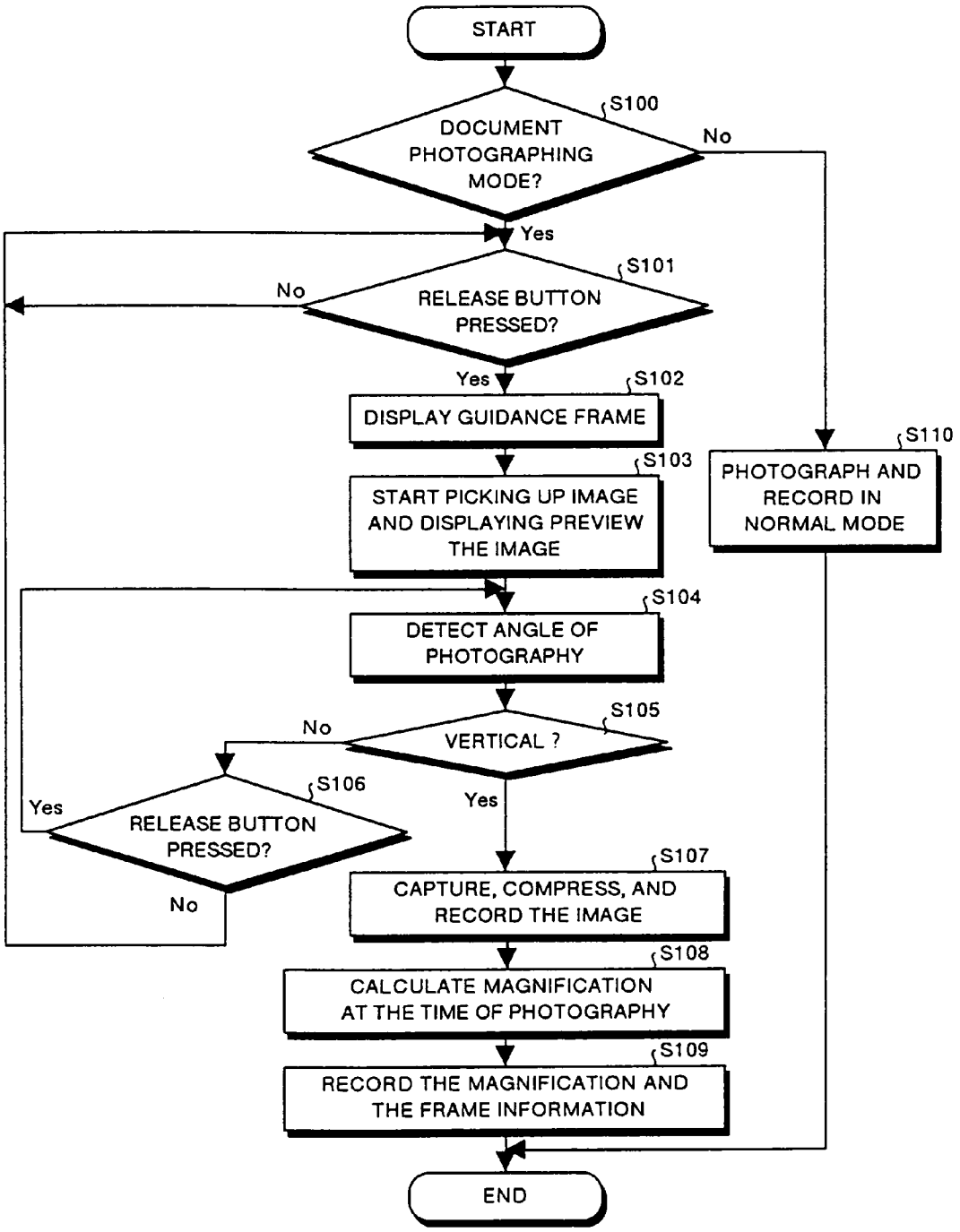
START
S100
DOCUMENT PHOTOGRAPHING MODE?
No
Yes
S101
RELEASE BUTTON PRESSED?
No
Yes
S102
DISPLAY GUIDANCE FRAME
S103
START PICKING UP IMAGE AND DISPLAYING PREVIEW THE IMAGE
S110
PHOTOGRAPH AND RECORD IN NORMAL MODE
S104
DETECT ANGLE OF PHOTOGRAPHY
S105
VERTICAL ?
No
Yes
S106
RELEASE BUTTON PRESSED?
Yes
No
S107
CAPTURE, COMPRESS, AND RECORD THE IMAGE
S108
CALCULATE MAGNIFICATION AT THE TIME OF PHOTOGRAPHY
S109
RECORD THE MAGNIFICATION AND THE FRAME INFORMATION
END

FIG.4

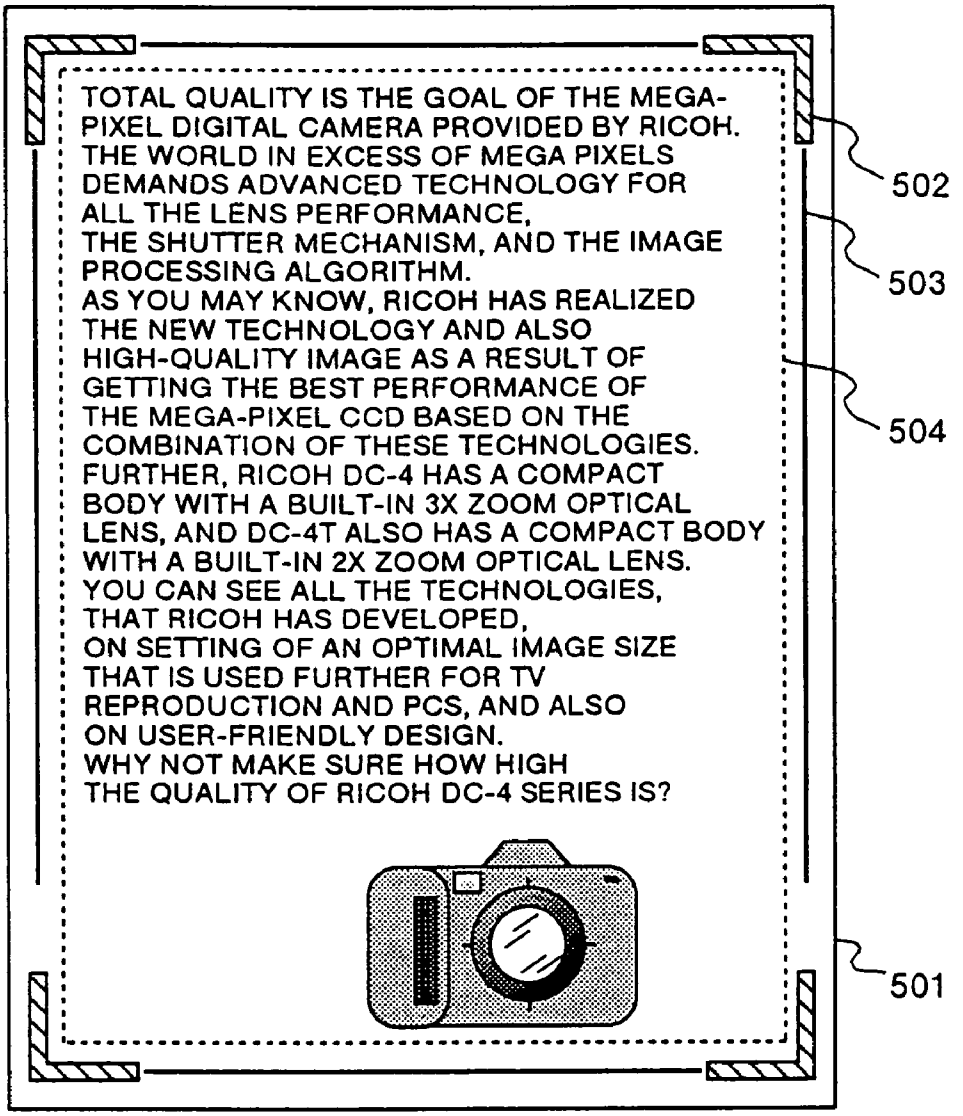
TOTAL QUALITY IS THE GOAL OF THE MEGA-
PIXEL DIGITAL CAMERA PROVIDED BY RICOH.
THE WORLD IN EXCESS OF MEGA PIXELS
DEMANDS ADVANCED TECHNOLOGY FOR
ALL THE LENS PERFORMANCE,
THE SHUTTER MECHANISM, AND THE IMAGE
PROCESSING ALGORITHM.
AS YOU MAY KNOW, RICOH HAS REALIZED
THE NEW TECHNOLOGY AND ALSO
HIGH-QUALITY IMAGE AS A RESULT OF
GETTING THE BEST PERFORMANCE OF
THE MEGA-PIXEL CCD BASED ON THE
COMBINATION OF THESE TECHNOLOGIES.
FURTHER, RICOH DC-4 HAS A COMPACT
BODY WITH A BUILT-IN 3X ZOOM OPTICAL
LENS, AND DC-4T ALSO HAS A COMPACT BODY
WITH A BUILT-IN 2X ZOOM OPTICAL LENS.
YOU CAN SEE ALL THE TECHNOLOGIES,
THAT RICOH HAS DEVELOPED,
ON SETTING OF AN OPTIMAL IMAGE SIZE
THAT IS USED FURTHER FOR TV
REPRODUCTION AND PCS, AND ALSO
ON USER-FRIENDLY DESIGN.
WHY NOT MAKE SURE HOW HIGH
THE QUALITY OF RICOH DC-4 SERIES IS?
502
503
504
501

FIG.5A

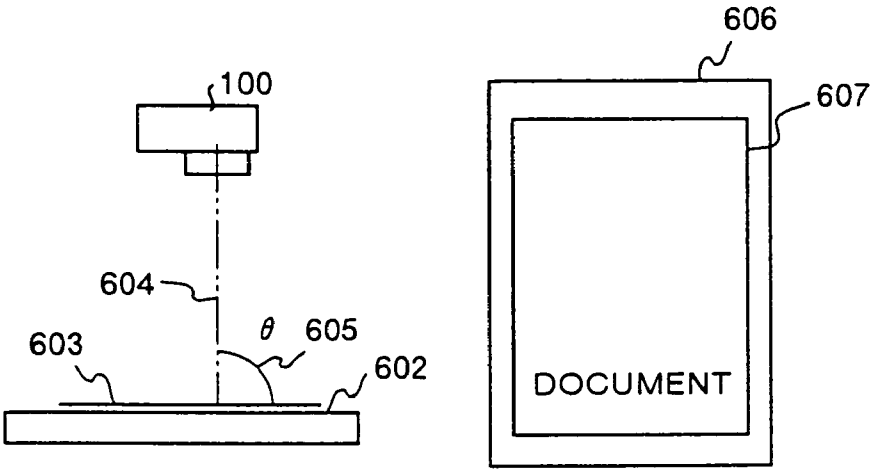
606
100
607
604
θ
605
603
602
DOCUMENT

FIG.5B

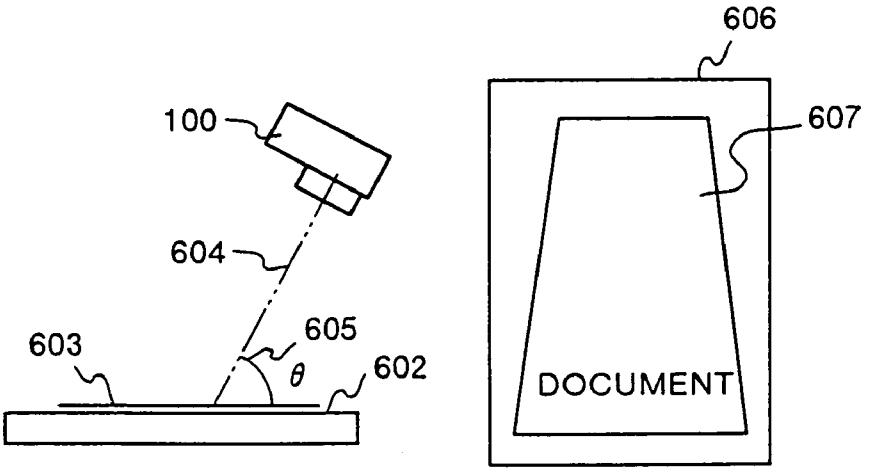
606
100
607
604
605
603
θ
602
DOCUMENT

FIG.6

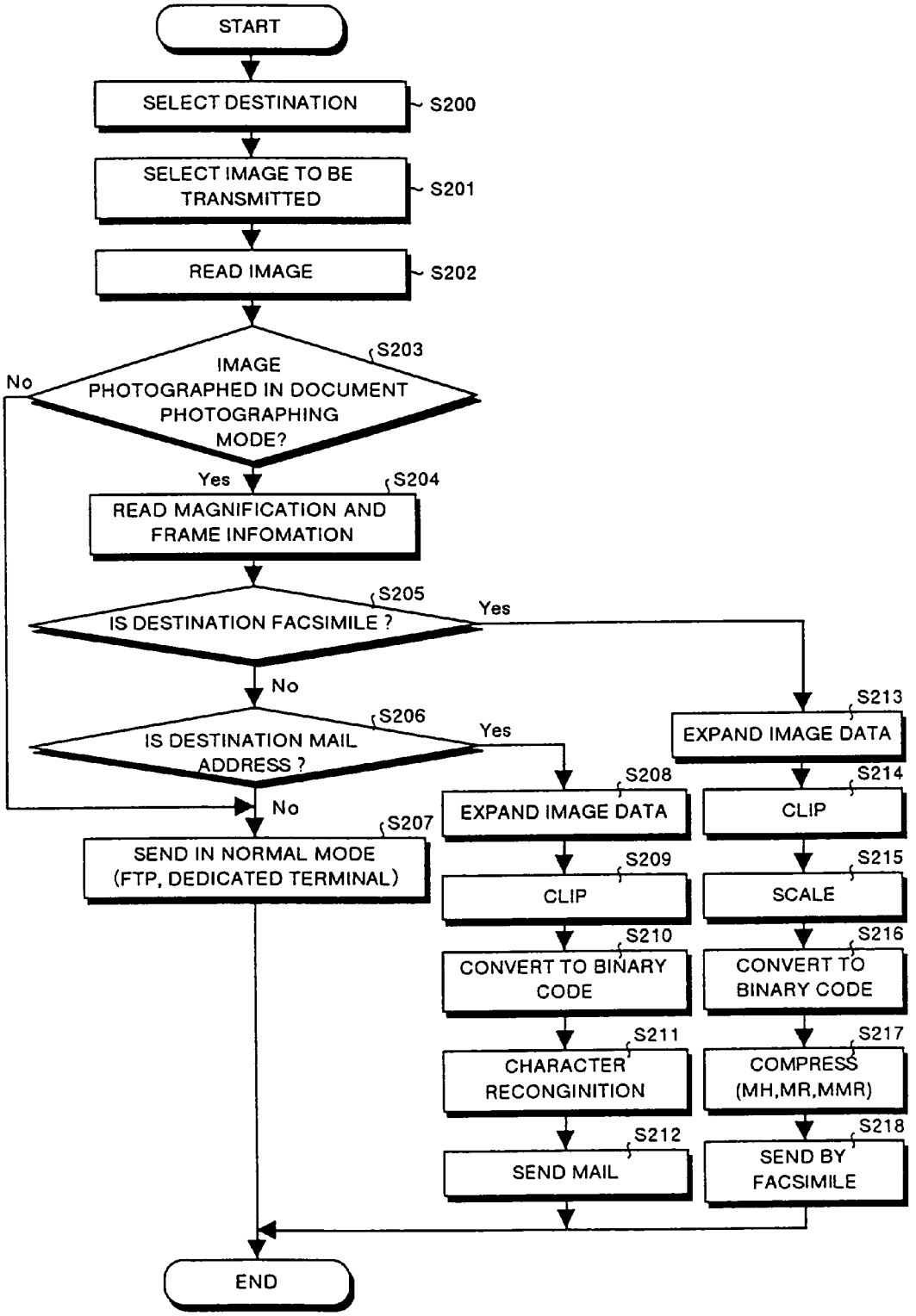
START
SELECT DESTINATION
S200
SELECT IMAGE TO BE TRANSMITTED
S201
READ IMAGE
S202
S203
IMAGE PHOTOGRAPHED IN DOCUMENT PHOTOGRAPHING MODE?
No
Yes
S204
READ MAGNIFICATION AND FRAME INFOMATION
S205
IS DESTINATION FACSIMILE ?
Yes
No
S206
IS DESTINATION MAIL ADDRESS ?
Yes
No
S207
SEND IN NORMAL MODE (FTP, DEDICATED TERMINAL)
S208
EXPAND IMAGE DATA
S209
CLIP
S210
CONVERT TO BINARY CODE
S211
CHARACTER RECONGINITION
S212
SEND MAIL
S213
EXPAND IMAGE DATA
S214
CLIP
S215
SCALE
S216
CONVERT TO BINARY CODE
S217
COMPRESS (MH,MR,MMR)
S218
SEND BY FACSIMILE
END

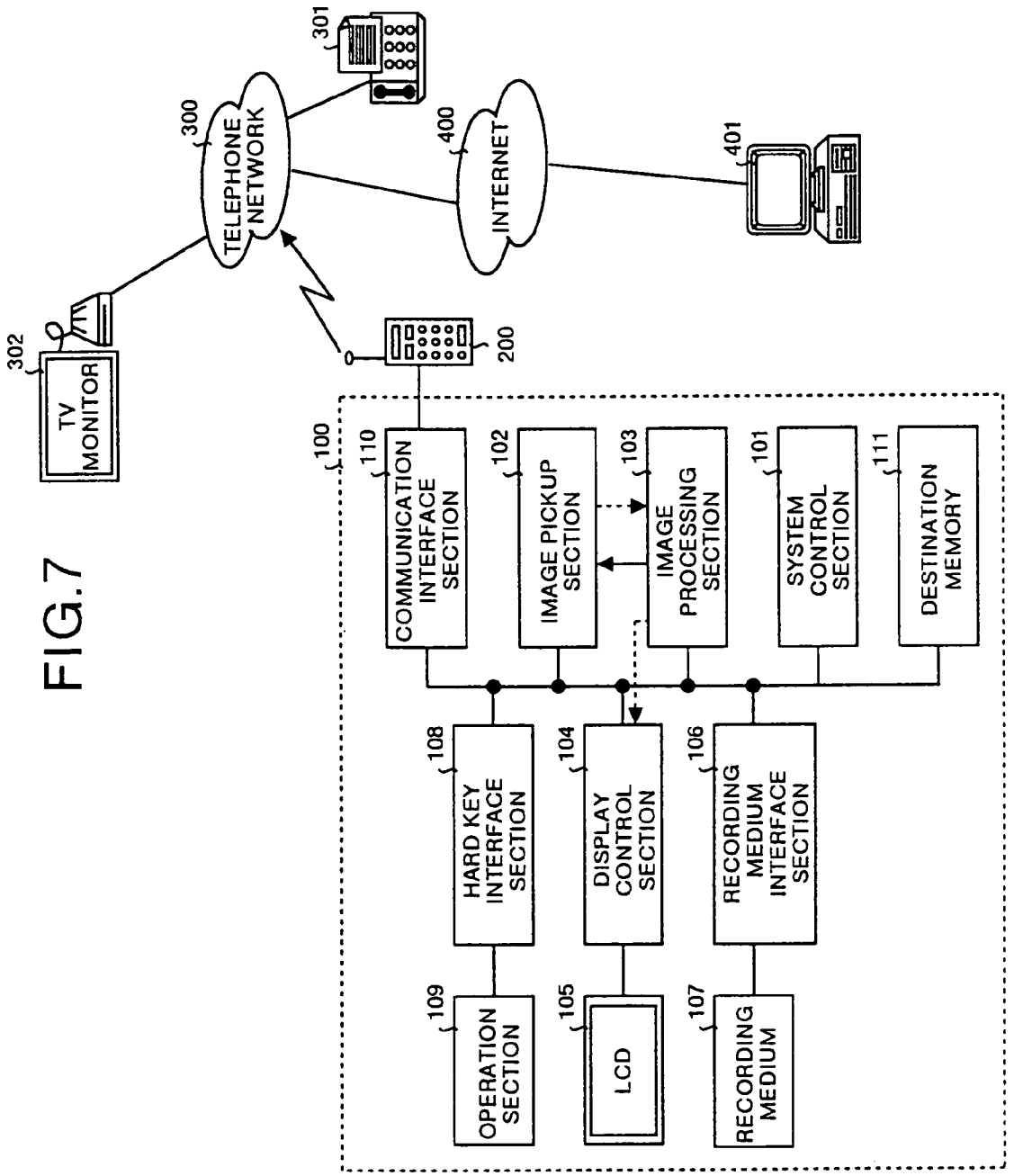
TV MONITOR
302
TELEPHONE NETWORK
300
301
INTERNET
400
401
200
100
COMMUNICATION INTERFACE SECTION
110
IMAGE PICKUP SECTION
102
IMAGE PROCESSING SECTION
103
SYSTEM CONTROL SECTION
101
DESTINATION MEMORY
111
HARD KEY INTERFACE SECTION
108
DISPLAY CONTROL SECTION
104
RECORDING MEDIUM INTERFACE SECTION
106
OPERATION SECTION
109
LCD
105
RECORDING MEDIUM
107

FIG.7

FIG.8

111

DESTINATION	TYPE	TELEPHONE NUMBER	MAIL ADDRESS	GUIDANCE FRAME DISPLAY INFORMATION	DOCUMENT SIZE	IMAGE DELETION FLAG
COMPANY A	PC	—	campanya@a.co.jp	0	—	0
TARO YAMADA	FAX	03-3541-＊＊＊＊	—	1	A4	1
TRADING COMPANY B	PC	—	campanyb@b.co.jp	0	—	0
STORE C	FAX	03-3683-＊＊＊＊	—	1	B5	1
HANKO ISHIYAMA	FAX	03-3543-＊＊＊＊	—	1	A4	0
・	・	・	・	・	・	・
・	・	・	・	・	・	・
・	・	・	・	・	・	・

FIG.9

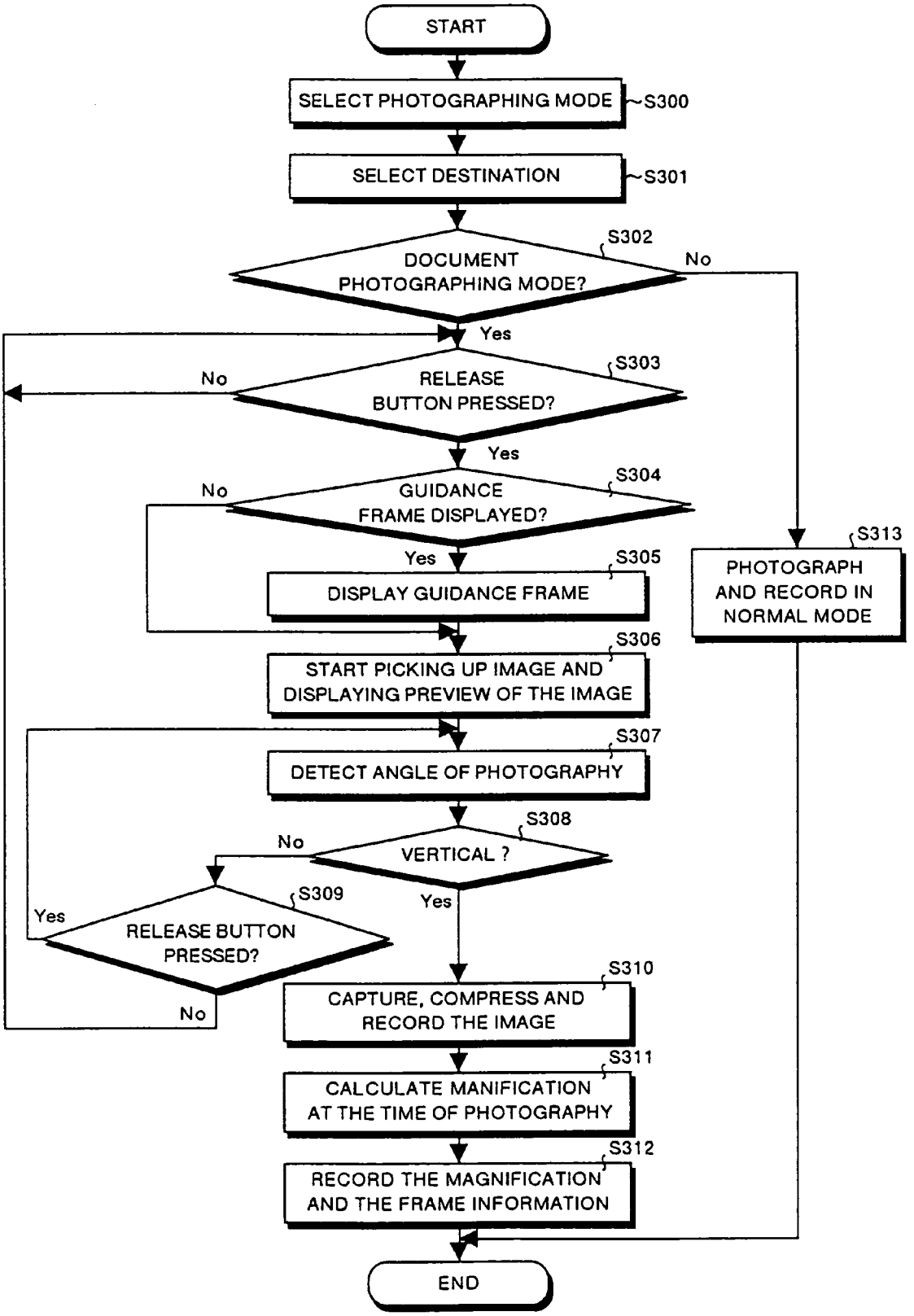
START
SELECT PHOTOGRAPHING MODE
S300
SELECT DESTINATION
S301
S302
DOCUMENT PHOTOGRAPHING MODE?
No
Yes
S303
RELEASE BUTTON PRESSED?
No
Yes
S304
GUIDANCE FRAME DISPLAYED?
No
Yes
S305
DISPLAY GUIDANCE FRAME
S313
PHOTOGRAPH AND RECORD IN NORMAL MODE
S306
START PICKING UP IMAGE AND DISPLAYING PREVIEW OF THE IMAGE
S307
DETECT ANGLE OF PHOTOGRAPHY
S308
VERTICAL ?
No
Yes
S309
RELEASE BUTTON PRESSED?
Yes
No
S310
CAPTURE, COMPRESS AND RECORD THE IMAGE
S311
CALCULATE MANIFICATION AT THE TIME OF PHOTOGRAPHY
S312
RECORD THE MAGNIFICATION AND THE FRAME INFORMATION
END

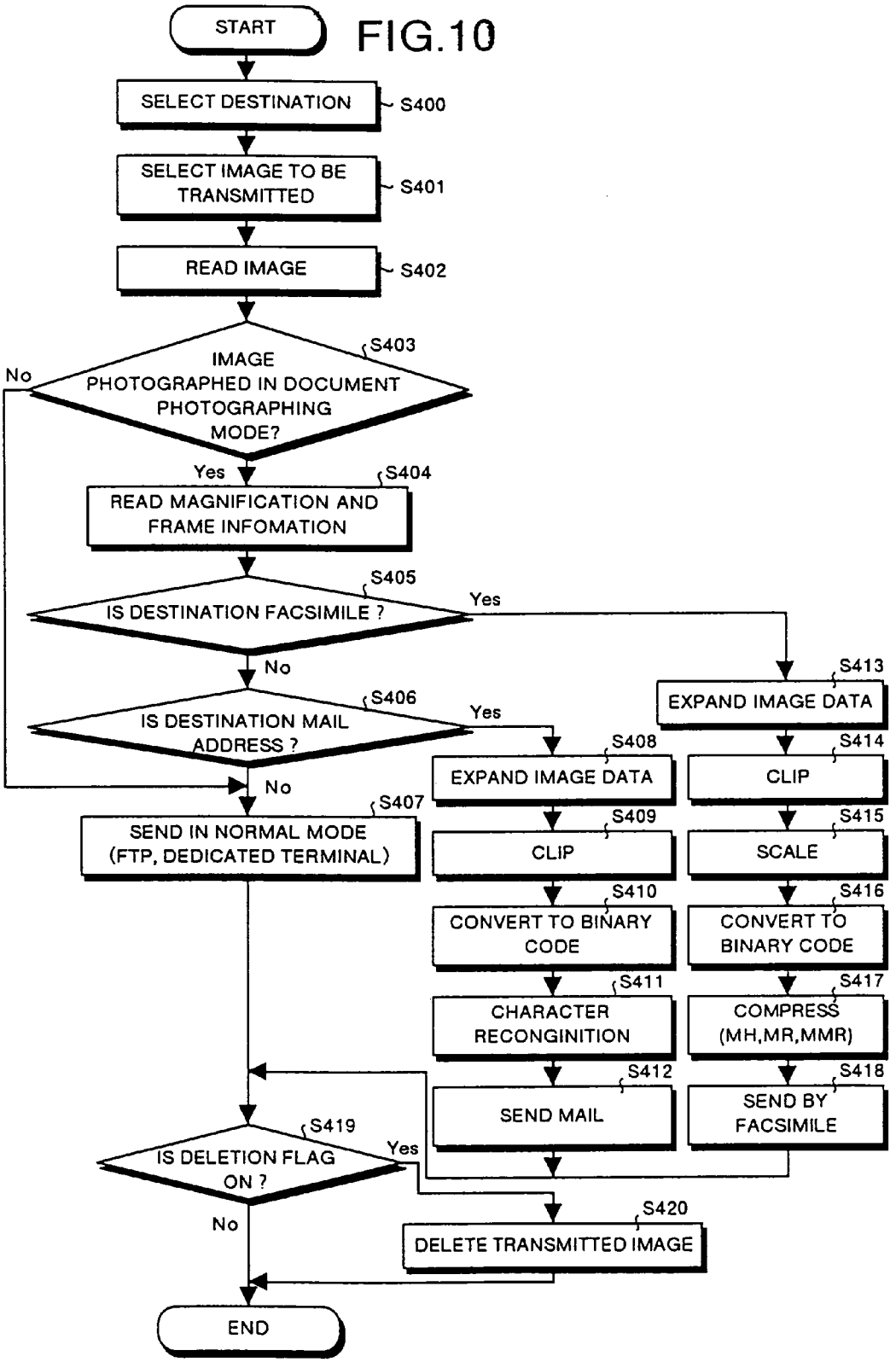
START
FIG.10
SELECT DESTINATION
S400
SELECT IMAGE TO BE TRANSMITTED
S401
READ IMAGE
S402
IMAGE PHOTOGRAPHED IN DOCUMENT PHOTOGRAPHING MODE?
S403
No
Yes
READ MAGNIFICATION AND FRAME INFOMATION
S404
IS DESTINATION FACSIMILE ?
S405
Yes
No
IS DESTINATION MAIL ADDRESS ?
S406
Yes
No
SEND IN NORMAL MODE (FTP, DEDICATED TERMINAL)
S407
EXPAND IMAGE DATA
S413
EXPAND IMAGE DATA
S408
CLIP
S414
CLIP
S409
SCALE
S415
CONVERT TO BINARY CODE
S410
CONVERT TO BINARY CODE
S416
CHARACTER RECONGINITION
S411
COMPRESS (MH,MR,MMR)
S417
SEND MAIL
S412
SEND BY FACSIMILE
S418
IS DELETION FLAG ON ?
S419
Yes
No
DELETE TRANSMITTED IMAGE
S420
END

FIG.11

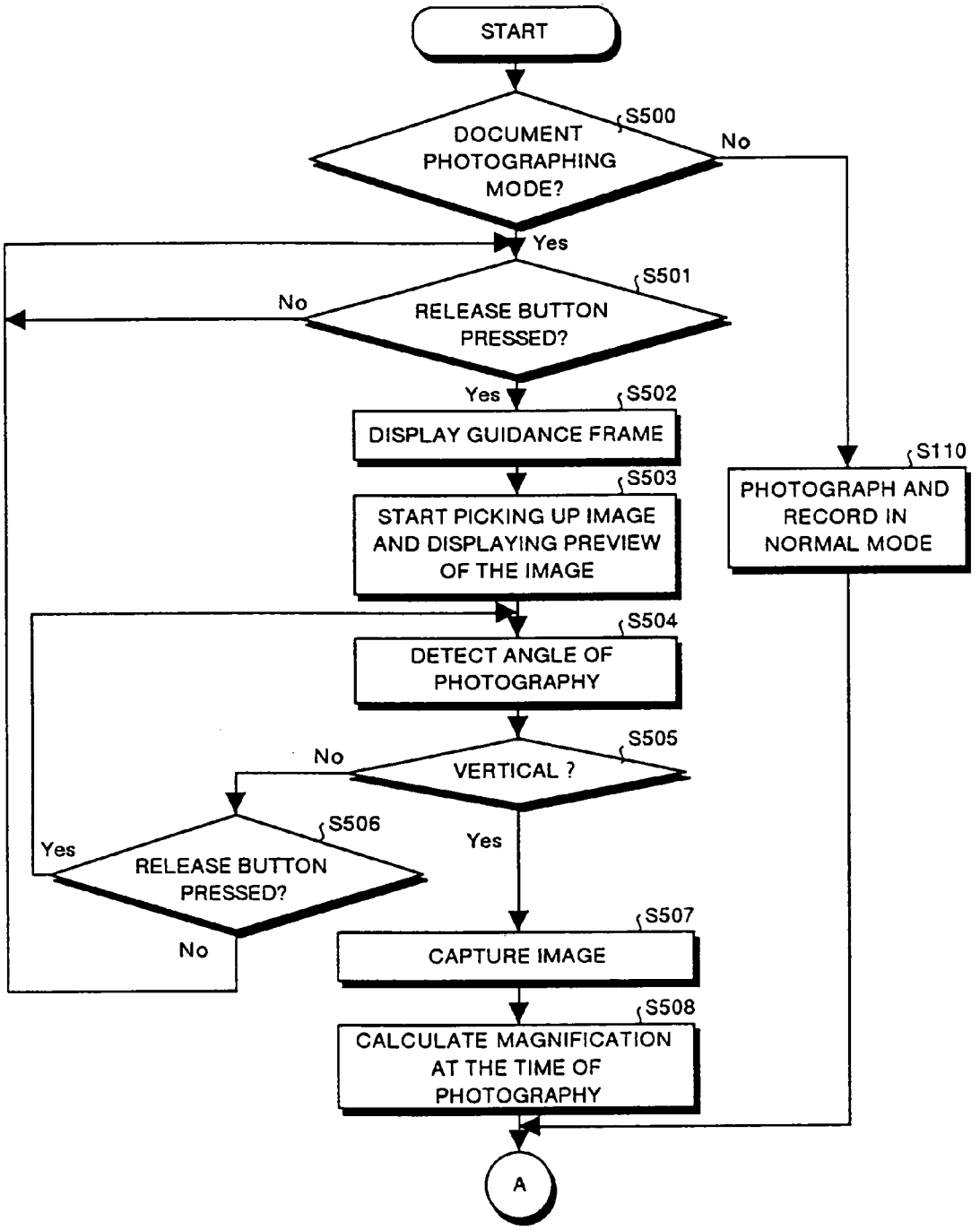
START
S500
DOCUMENT PHOTOGRAPHING MODE?
No
Yes
S501
RELEASE BUTTON PRESSED?
No
Yes
S502
DISPLAY GUIDANCE FRAME
S503
START PICKING UP IMAGE AND DISPLAYING PREVIEW OF THE IMAGE
S110
PHOTOGRAPH AND RECORD IN NORMAL MODE
S504
DETECT ANGLE OF PHOTOGRAPHY
S505
VERTICAL ?
No
Yes
S506
RELEASE BUTTON PRESSED?
Yes
No
S507
CAPTURE IMAGE
S508
CALCULATE MAGNIFICATION AT THE TIME OF PHOTOGRAPHY
A

FIG.12

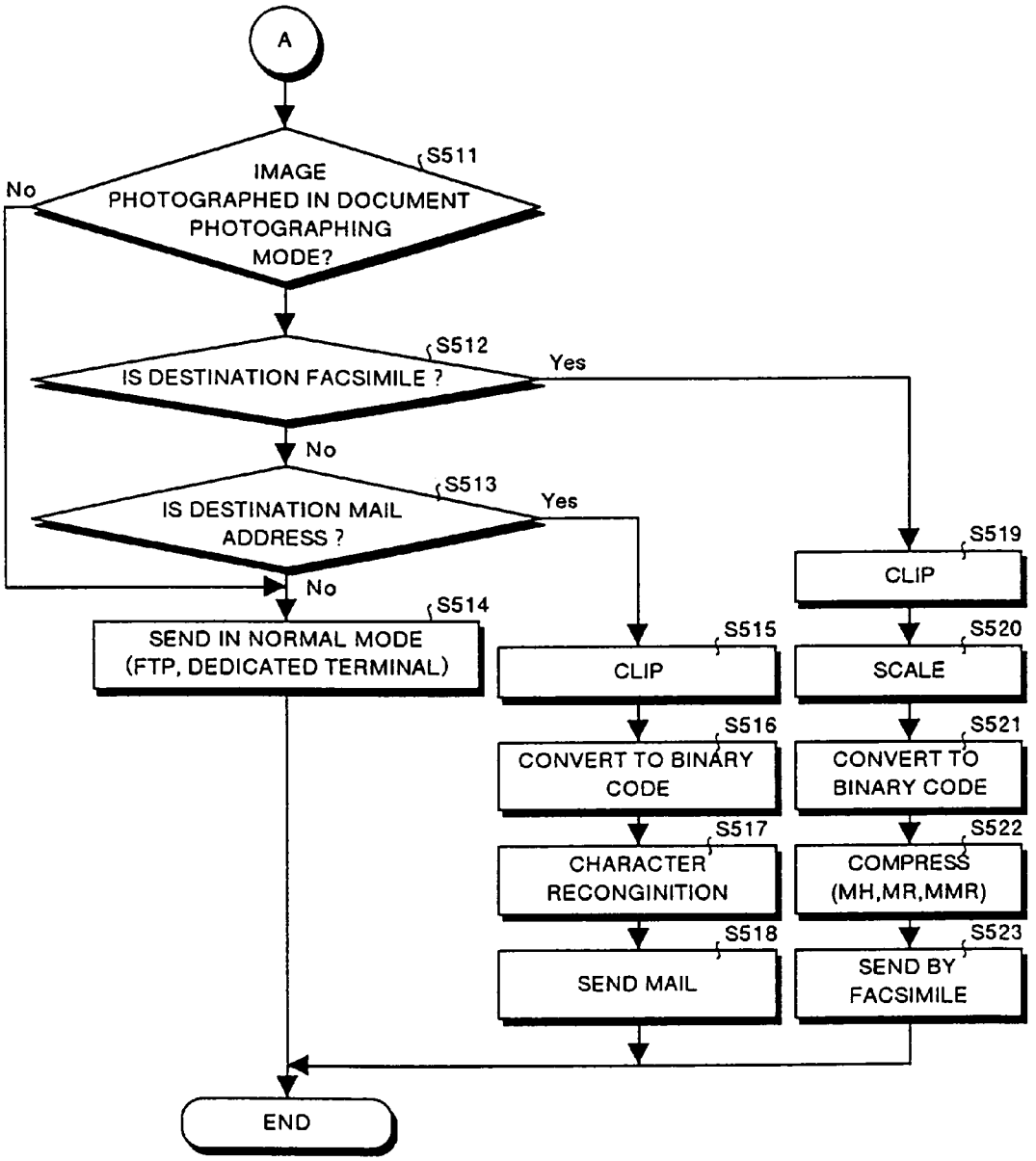
A
S511
IMAGE PHOTOGRAPHED IN DOCUMENT PHOTOGRAPHING MODE?
No
S512
IS DESTINATION FACSIMILE ?
Yes
No
S513
IS DESTINATION MAIL ADDRESS ?
Yes
No
S514
SEND IN NORMAL MODE (FTP, DEDICATED TERMINAL)
S515
CLIP
S516
CONVERT TO BINARY CODE
S517
CHARACTER RECONGINITION
S518
SEND MAIL
S519
CLIP
S520
SCALE
S521
CONVERT TO BINARY CODE
S522
COMPRESS (MH,MR,MMR)
S523
SEND BY FACSIMILE
END

DIGITAL CAMERA AND DOCUMENT PHOTOGRAPHING AND TRANSMITTING METHOD OF THE SAME

FIELD OF THE INVENTION

The present invention relates to a digital camera. More particularly, this invention relates to a digital camera which has a document photographing mode in addition to the normal photographing mode.

BACKGROUND OF THE INVENTION

The present day digital camera includes many functions. For example, there is known a digital camera which has a character photographing mode in addition to a normal photographing mode. The normal photographing mode is the mode in which ordinary snapshots, for example, photographs of scenery are taken. In the character photographing mode, the digital camera subjects data to image processing so as to improve the appearance of the characters.

There is a digital still camera disclosed in Japanese patent application laid open No. HEI 08-125870. This digital still camera has a structure as follows. The digital still camera has the normal photographing mode and the document photographing mode. Any one of these two modes can be selected. When the normal photographing mode is selected, image data is compressed by a natural picture compression unit. Whereas image data is compressed by a document compression unit (a compression method appropriate for an image with a small number of gray levels in achromatic color) when the document photographing mode is selected. The compressed image data is then stored in an externally provided memory. Therefore, the image data can efficiently be compressed irrespective of whether the data belongs to a picture or belongs to a photograph of a document without degradation in image quality.

However, the conventional type of digital camera has a problem that the data of the captured image can not effectively be used. More specifically, the digital camera having the character photographing mode can not transmit the captured image as through a facsimile. In order to transmit the image as a facsimile, following process is carried out. First, the image is transmitted to a computer where the image is subjected to processing such as expansion, image conversion, compression, or the like and then only the image can be transmitted as a facsimile.

Further, in the digital still camera described above, the compression method is uniquely determined based on the photographing mode. For example, when a document (for example, an encyclopedia) which contains picture of scenery is photographed, and if the picture is photographed in the document mode, the image data is compressed by the compression method suitable for an image with a small number of gray levels in achromatic color. Resultantly, the picture of the scenery can not be reproduced properly. Therefore, the user is required to photograph the same document in the normal photographing mode. Thus, the user has to choose the photographing modes based on the purpose of using the document.

SUMMARY OF THE INVENTION

It is an object of this invention to provide a digital camera which can improve the use of the image photographed in the document photographing mode.

According to one aspect of this invention, an expansion unit expands compressed image data photographed in the document photographing mode and stored in a storage unit and an image processing unit then subjects the data to any image processing that a destination requires. Therefore, the image photographed in the document photographing mode can be converted to any format suitable for the destination.

According to another aspect of this invention, an image processing unit subjects the image data photographed in the document photographing mode to any image processing that a destination requires. Therefore, the image photographed in the document photographing mode can be converted to any format suitable for the destination.

According to still another aspect of this invention, an expansion unit expands a compressed image data acquired in the document photographing mode and stored in a storage unit, and an image processing unit then subjects the data to the processing such as clipping, conversion to a smaller number of gray levels in achromatic color, and resolution conversion, and once more compresses the data. Therefore, the image photographed in the document photographing mode can be converted to any format suitable for a destination (e.g., a facsimile).

According to still another aspect of this invention, an image processing unit subjects the image data acquired in the document photographing mode to the processing such as clipping, conversion to a smaller number of gray levels in achromatic color, and resolution conversion, and once more compresses the data. Therefore, the image photographed in the document photographing mode can be converted to any format suitable for a destination (e.g., a facsimile).

According to still another aspect of this invention, an expansion unit expands the compressed image data acquired in the document photographing mode and stored in a storage unit, and an image processing unit then subjects the image data to the processing such as clipping, and conversion to a smaller number of gray levels in achromatic color, and character recognition. Therefore, the image photographed in the document photographing mode can be converted to any format suitable for a destination (e.g., a facsimile).

According to still another aspect of this invention, an image processing unit subjects the image data acquired in the document photographing mode to the processing such as clipping, and conversion to a smaller number of gray levels in achromatic color, and character recognition. Therefore, the image photographed in the document photographing mode can be converted to any format (e.g., a text document) suitable for a destination.

According to still another aspect of this invention, in the document photographing mode, a display unit displays the guidance to notify a user of photographing conditions of a document during displaying of the picture of the subject on the monitor before it is photographed. Therefore, the user can easily fix the location of the document.

According to still another aspect of this invention, an angle of photography detection unit which detects the angle of photography is provided. In the document photographing mode, photography is started only when the angle of photography is substantially vertical to the surface of the subject. Therefore, a proper image of the document can be obtained.

According to still another aspect of this invention, there are provided the steps of monitoring a subject on the display unit in response to instructions for monitoring, displaying guidance on the display unit when the monitoring is performed, capturing an image and compressing the image data in response to instructions for photographing, storing the

compressed image data in a storage unit, reading the compressed image data stored in the storage unit and expanding the data in response to instructions for transmission, subjecting the expanded image data to any image processing that a destination requires, and transmitting the image data, that has been subjected to image processing, to the destination. Therefore, the image can be converted to any format suitable for the destination.

According to still another aspect of this invention, there are provided the steps of monitoring a subject on the display unit in response to instructions for monitoring, displaying guidance on the display unit when the monitoring is performed, capturing an image in response to instructions for photographing, subjecting the data of the captured image to any image processing that a destination requires, and transmitting the image data, that has been subjected to image processing, to the destination. Therefore, the image can be converted to any format suitable for the destination and transmitted immediately.

Other objects and features of this invention will become apparent from the following description with reference to the accompanying drawings.

BRIEF DESCRIPTION OF THE DRAWINGS

FIG. **1** shows a configuration of a digital camera according to a first embodiment;

FIG. **2** shows an example of an image-file format;

FIG. **3** shows a flow chart of photographing operation when the document photographing mode is selected in the first embodiment;

FIG. **4** shows an example of guidance display;

FIG. **5**A and FIG. **5**B explain about the angle of photography;

FIG. **6** shows a flow chart of operation when a photographed image is transmitted to an external device in the first embodiment;

FIG. **7** shows a configuration of a digital camera according to a second embodiment;

FIG. **8** shows an example of the structure of the destination memory shown in FIG. **7**;

FIG. **9** shows a flow chart of photographing operation when the document photographing mode is selected in the second embodiment;

FIG. **10** shows a flow chart of operation when a photographed image is transmitted to an external device in the second embodiment;

FIG. **11** shows a flow chart of operation when the document photographing/transmission mode is selected in a third embodiment; and

FIG. **12** is the continuation of the flow chart of FIG. **11**.

DESCRIPTION OF THE PREFERRED EMBODIMENTS

Preferred embodiments of the present invention are explained in detail below with reference to the attached drawings.

FIG. **1** shows a configuration of a digital camera according to a first embodiment. Reference numeral **100** represents the digital camera. This digital camera **100** comprises, as shown in FIG. **1**, a system control section **101** which controls the entire system of the digital camera, and an image pickup section **102** which picks up a subject image and converts the image to image data. The digital camera **100** further comprises an image processing section **103** which subjects the image data output from the image pickup section **102** to image processing, and a display control section **104** which controls the display of the image processed in the image processing section **103** to an LCD **105**. The LCD **105** is for displaying the image. There is also provided a recording medium interface section **106** which is an interface of a recording medium **107**. The recording medium **107** stores the compressed image data. There is further provided a hard key interface section **108** which detects key operations in an operation section **109**. Through the operation section **109**, a user gives instructions to the digital camera. There is provided a communication interface section **110** which performs data communications with the outside.

The system control section **101** provides controls for the entire system of the digital camera as explained above. More specifically, although not shown here, this system control section **101** comprises a ROM, a RAM, and a timer. The CPU controls the entire system of the digital camera according to a program stored in a ROM. The ROM stores the program to operate the CPU. The RAM is used as a work area of the CPU. The timer counts the time.

The image pickup section **102** picks up an image of a subject (subject image) and outputs image data as explained above. More specifically, although not shown here, this image pickup section **102** comprises optical system components including a lens, a CCD, a lens driving motor, a CCD drive circuit, and an A/D converter. The lens forms the subject image. The lens driving motor drives the lens. The CCD converts the subject image into electric signals (analog image data). The CCD drive circuit drives the CCD. The A/D converter converts the analog image data output from the CCD to digital signals (digital image data).

The image processing section **103** comprises a DSP (Digital Signal Processor) for image processing and memory. More specifically, this DSP subjects the image data obtained in the image pickup section **102** to various types of image processing. Further, the DSP performs focusing and adjustments to exposure by controlling timing of driving the CCD in the image pickup section **102** and the lens driving motor, and also performs compression or expansion of the image data.

The display control section **104** subjects the image data processed in the image processing section **103** to signal processing so that it can be displayed on the LCD **105**. Further, the display control section **104** generates various graphical images for the user interface, and displays the generated images on the LCD **105**. The LCD **105** displays a subject image, and also displays graphics for the user interface.

The recording medium interface section **106** comprises a memory card controller that is provided for an interface with the recording medium **107**. Various types of information related to the compressed image data and images are recorded in the recording medium **107**.

The hard key interface section **108** comprises a parallel port that is provided to detect a state of hardware for the user interface such as keys and a dial in the operation section **109**. The operation section **109** is used when the user wants to give any instructions regarding the operations to the digital camera. More specifically, although not shown here, the operation section **109** comprises a release button to instruct photographing, and a photographing mode key used to select between the normal photographing mode to photograph a natural picture and the document photographing mode to photograph characters clearly. The operation section **109** further comprises a fixed document size setting key used to select between fixed document sizes (A size, letter, legal

size, and so forth). The communication interface **110** comprises a communication controller, which is provided for performing data communications with the outside through a communication device such as a portable telephone **200**.

In FIG. **1**, reference numeral **200** represents a portable telephone that is connected to the communication interface section **110** of the digital camera to perform data communication with the outside. Reference numeral **300** represents a telephone network. Reference numeral **301** represents a facsimile connected to the telephone network **300**. Reference numeral **302** represents a dedicated terminal (which receives and stores images from the digital camera and displays the images on a TV monitor) connected to the telephone network **300**.

Further, reference numeral **400** represents the Internet to which the telephone network **300** is connected. Reference numeral **401** represents a personal computer connected to the Internet **400**. The digital camera **100** can perform data communications, via the portable telephone **200**, with any device (e.g., the facsimile **301** or the dedicated terminal **302**) connected to the telephone network **300** and any device (e.g., the personal computer **401**) connected to the Internet **400**.

The overview of photographing operation of the digital camera **100** having the configuration is explained below. The user operates a photographing mode key of the operation section **109** before photographing, and sets the digital camera in a photographing mode (a normal photographing mode, a document photographing mode, and so forth). The contents of operation through the operation section **109** are determined by the system control section **101** through the hard key interface section **108**. The system control section **101** generates a guidance graphic on the display control section **104** according to the operation, and then guides the user to perform the next operation.

The system control section **101** sets, at the instant the photographing mode is selected, processing parameters corresponding to the mode in the image processing section **103**. If the state of the release button, that is not shown in FIG. **1**, being half-pressed has been detected after the camera is ready for photographing, this half-pressed operation is determined by the system control section **101** via the hard key interface section **108** in the same manner as the mode setting.

The image pickup section **102** starts an image pickup operation to display the preview of the image on the LCD **105** before photographing is actually performed, under the controls of the image processing section **103**. The data for the image picked up by the image pickup section **102** is continuously sent to the image processing section **103**. The image processing section **103** then subjects the image data to the processing such as color space conversion, γ correction, and white balance adjustment, and transfers the processed image data to the display control section **104**. Concurrently with these operations, the image processing section **103** detects how focus and exposure are achieved, and makes necessary adjustment to focus and exposure by controlling the image pickup section **102**.

The display control section **104** subjects the image data to signal processing and displays the data on the LCD **105** to show how the image is photographed to the user. The operation of pressing the release button of the operation section **109** is then determined by the system control section **101** through the hard key interface section **108** in a like manner. The image pickup section **102** captures a subject image according to the controls of the image processing section **103**, and outputs the data for the image to the image processing section **103**. Whereas the image processing section **103** subjects the data to image processing and compression processing corresponding to the photographing mode.

The system control section **101** reads the image data compressed in the image processing section **103**, adds header information to this compressed image data, and then writes the data as an image file in the recording medium **107** via the recording medium interface section **106**. This header information includes information for the selected photographing mode and information for the photographed date and time, or the like. A series of photographing operations is then complete.

FIG. **2** shows an example of an image-file format. This image file consists of compressed image data and a header as shown in the figure. The header includes information such as the mode of photography, date and time of photography, magnification at the time of photography, and a frame type.

The overview of operation of data communications in the digital camera **100** is explained below. The user connects the portable telephone **200** to the digital camera **100**. The user then specifies a destination of the image, through operation of the operation section **109**, and selects the image to be transmitted in the same manner as the setting of a photographing mode. The system control section **101** originates a call via the portable telephone **200** and establishes a communication line by controlling the communication interface section **110**. The system control section **101** then reads the file of the specified image from the recording medium **107**, and transmits the image file in accordance with a predetermined protocol.

The schematic operations in the cases where the digital camera **100** performs data communications with the facsimile **301**, the personal computer **401**, and the dedicated terminal **302** are explained below.

When data communications with the facsimile **301** (facsimile transmission) are performed, the digital camera **100** transmits the image, that has been compressed and stored as binary information on photographing, to the facsimile **301** in accordance with the facsimile protocol on the telephone network **300** using the method, for instance, disclosed in Japanese patent application laid open No. HEI 08-125870.

When data communications with the personal computer **401** are performed, the digital camera **100** transmits the image to the personal computer **401** via the telephone network **300** and the Internet **400**. In this case, the digital camera **100** transmits the image, compressed and stored in the normal photographing mode (JPEG compression), to the personal computer **401** in accordance with FTP (File-Transfer Protocol) or SMTP (Simple Mail Transfer Protocol) as an attached file to a mail document. In the above case, however, the digital camera **100** is generally connected to a server (not shown), which is connected to the Internet **400** using PPP (Point-to-Point Protocol).

When data communications with the dedicated terminal **302** are performed, the digital camera **100** transmits the image to the dedicated terminal **302** via the telephone network **300**. In this case a particular protocol is used for the data communications. Each type of these communications protocols (attribute of destination) is stored as destination information in a one-to-one correspondence between a type of protocol, a telephone number, and an Internet address. The user only selects a destination, and then the corresponding protocol is automatically selected and executed.

Photographing operation in the case where the document photographing mode is selected is explained below with reference to FIG. **3** to FIG. **5**. FIG. **3** shows a flow chart of

photographing operation when the document photographing mode is selected. FIG. **4** shows an example of guidance display on the LCD **105**. FIG. **5**A and FIG. **5**B show how to detect the angle of photography.

The user selects, when photographing is to be carried out in the document photographing mode, the document photographing mode with the photographing mode key of the operation section **109**, and further selects the fixed document size (A size, letter, legal size, and so forth) of an image to be picked up with the regular document size setting key.

In FIG. **3**, the system control section **101** first identifies the current photographing mode (step S**100**). When the current mode is the normal photographing mode, the system control section **101** proceeds to step S**110**, and then performs normal photographing and recording.

On the other hand, when it is determined, at step S**100**, that the current mode is the document photographing mode, the system control section **101** monitors the information relating to keys pressed in the hard key interface section **108**. When it is determined that the release button has been pressed (step S**101**), the system control section **101** displays a guidance frame on the LCD **105** in order that the user can easily fix the location of a document (step S**102**). The system control section **101** then starts picking up a document image and displays the preview of the image (the subject is displayed on the monitor) (step S**103**).

The display of a guidance frame is explained below with reference to FIG. **4**. In FIG. **4**, reference numeral **501** represents the frame of the LCD **105**, **502** represents the displayed guidance frame. Reference numeral **503** represents a document to be photographed, and **504** represents an area to be cut out by the processing of clipping, that is explained later. The frame to be displayed here is displayed based on the aspect ratio of a regular document size selected when the document photographing mode is selected.

The system control section **101** then issues an instruction to detect an angle of photography of the subject (document) to the image processing section **103**. In response to reception of the instruction, the image processing section **103** detects the angle of photography of the subject, and the system control section **101** reads the detected angle of photography (step S**104**). The system control section **101** then determines whether the angle of photography is vertical to the surface of the subject (step S**105**). About the angle of photography and the method of detecting this angle are explained below with reference to FIG. **5**A and FIG. **5**B.

In FIG. **5**A and FIG. **5**B, reference numeral **100** is the digital camera, **602** represents a base where a document **603** is placed. Reference numeral **603** represents a document to be photographed, and **604** represents an optical axis of the digital camera **100**. Reference numeral **605** is the angle of photography, **606** represents the frame of the LCD **105**, and **607** represents a display how the document **603** is photographed.

FIG. **5**A shows a case where the angle of photography is vertical. In this case, a rectangular document is displayed in a rectangular shape. FIG. **5**B shows a case where the angle of photography is inclined. In this case, the rectangular document is displayed in a trapezoidal shape, which is not correct. In order to facilitate understanding, FIG. **5**B shows a deformation in a direction which is parallel to the length of the document. In an actual case, however, there is also a deformation in direction which is parallel to the width of the document. In this case, the photographed image becomes a more distorted rectangle, and this picked-up image changes seamlessly in association with inclinations of the digital camera **100**.

The image processing section **103** recognizes the shape of the captured document (which is not the shape of the actual document but the shape of the picked-up image of the picked-up document), and detects the state shown in FIG. **5**A (the state where the angle of photography is vertical). As the method for recognizing the shape of a document, any known method can be used, therefore, the detailed explanation is omitted.

At step S**105**, when it is determined that the angle of photography is not vertical, the system control section **101** proceeds to step S**106**, and determines whether the release button has been pressed. When the release button has not been pressed, the system control section **101** returns to step S**101**. When the release button has been pressed, on the other hand, the system control section **101** detects again the angle of photography again (step S**104**).

At step S**105**, on the other hand, when it is determined that the angle of photography is vertical, the system control section **101** allows the image pickup section **102** to capture an image in the same manner as that of the case where the release button has been pressed in the normal photographing mode. The system control section **101** then allows the image processing section **103** to compress the data of the captured image, and further records the data in the recording medium **107** via the recording medium interface section **106** (step S**107**).

Further, the system control section **101** reads the lens-to-subject distance (the distance from the digital camera **100** to the document (subject document)), detected during focusing on photographing, from the image processing section **103**. The system control section **101** then calculates the magnification at the time of photography (a focal length of a lens/a lens-to-subject distance) (step S**108**), and records the magnification, as an image file, which is correlated to the photographed image together with the information for the frame type in the recording medium **107** (step S**109**).

As explained above, according to the example of the operation, when photographing is performed in the document photographing mode, the guidance, which helps the user fix the location of a document, is displayed. Therefore, the user can fix the location of the document, thus the usability of the digital camera for the user can be improved.

Further, according to the example of the operation, as a guidance display, the guidance frame is displayed so that the user can recognize the area at the aspect ratio of regular-size paper. Therefore, the user can fix the location of a document based on the size of the regular-size paper, thus the usability of the digital camera for the user can be more improved.

Further, according to the example of the operation, when the angle of photography is vertical to the document at the time of photographing in the document photographing mode, the photographing is automatically performed. Therefore, the document can be photographed at the appropriate angle, thus the usability of the digital camera for the user can be improved.

Further, according to the example of the operation, the image processing section **103** detects the angle of photography by recognizing the shape of the picked-up image of a picked-up document. Therefore, it is possible to detect a proper angle of photography regardless of how the document to be photographed is placed, and the angle of photography can be detected with a simple and low-cost configuration. In addition, detection can be performed using a gravity sensor assuming that an ordinary document is placed horizontally or vertically to the gravity direction. However, as compared to this method, when the method for detecting

the angle of photography based on image processing is employed, it is possible to achieve further minimization and low cost of the device.

Further, according to the example of the operation, in the document photographing mode, the data relating to photographing conditions (magnification at the time of photography, and information about the frame type (information for a guidance frame)) is recorded in the recording medium **107** in correspondence with the compressed image data. Therefore, when the image is to be transmitted to an external device (e.g., a facsimile or a personal computer), the image can easily be subjected to any image processing that the destination requires by utilizing this data about photographing conditions.

Operation of transmitting a photographed image to an external device is explained below with reference to FIG. **6**. FIG. **6** shows a flow chart of operation when a photographed image is transmitted to an external device.

In FIG. **6**, the user first operates the operation section **109** to select the destination and the image to be transmitted (step S**200**, S**201**). The system control section **101** reads the selected compressed image data from the recording medium **107** (step S**202**), and identifies the photographing mode, in which the image is photographed, from the header information of the image. The system control section **101** then determines whether the image has been photographed in the document photographing mode (step S**203**). When the image has been photographed in any mode other than the document photographing mode, the system control section **101** proceeds to step S**207**, and the image data is transmitted as it is using the protocol corresponding to the destination.

On the other hand, at step S**203**, when it is determined that the image has been photographed in the document photographing mode, the system control section **101** reads the file, in which the magnification at the time of photography recorded in photographing and the frame type are recorded, from the recording medium **107** (step S**204**). The system control section **101** then determines whether the attribute of destination is a facsimile (step S**205**). When the attribute of destination is a facsimile, the system control section **101** proceeds to step S**213**, and transmits the read-out compressed image data to the image processing section **103**. In response to reception of the data, the image processing section **103** expands the compressed image data and clips the data (step S**214**). In this clipping, the area determined uniquely based on the previously read-out frame type is clipped and processed (see FIG. **4**).

The image processing section **103** then performs the processing for scaling to the image (step S**215**). At this step, the image processing section **103** changes the size of the image to the closest possible size to the real size of the photographed document using the previously read-out value of magnification at the time of photography. More specifically, when a A4-size document is photographed, the image is scaled so that the image is transmitted as the A4 document. Similarly, when a A3-size document is photographed, the image is scaled so that the image is transmitted as the A3 document. In this case, the resolution of the image is also converted to the resolution defined in the facsimile communications.

Further, the image processing section **103** subjects the data to binarization (step S**216**). The processing for binarization can be performed by using the method disclosed, for example, in Japanese patent application laid open HEI 08-125870. The image processing section **103** then recompresses the binary-coded image data by the compression method used for facsimile communications (step S**217**). As the compression method, any method (MH, MR, or MMR), which is determined based on negotiation when communication is started, is used. The system control section **101** transmits the recompressed image data to the facsimile via the communication interface section **110** (step S**218**), and then the processing is terminated.

At the step S**205**, on the other hand, when the attribute of destination is not a facsimile, the system control section **101** proceeds to step S**206**. It is determined whether the attribute of destination is an electronic mail. When the attribute of destination is an electronic mail, the image processing section **103** subjects the compressed image data to expansion, clipping, and binarization (steps S**208** to S**210**) in the same manner as that of facsimile communications. The image processing section **103** then converts the data to a text document based on character recognition (step S**211**).

The system control section **101** edits the converted text document appropriate as the contents of an electronic mail, sends the email via the communication interface section **110** (step S**212**), and then ends the processing. At the step S**206**, when the attribute of destination is not an electronic mail, the image data is transmitted as it is by the protocol in accordance with the destination (step S**207**).

According to the example of the operation, the image processing section **103** converts the image photographed in the document photographing mode to the data format corresponding to the destination (facsimile or personal computer) selected by the user. Therefore, the image photographed in the document photographing mode can be converted to any format appropriate to the destination, thus it is possible to make effective use of the photographed image.

Further, according to the example of the operation, when the image photographed in the document photographing mode is transmitted to a facsimile, the image processing section **103** first expands the compressed image data stored in the recording medium **107**. The image processing section **103** then subjects the data to processing such as clipping, binarization (conversion to a smaller number of gray levels in achromatic color), and resolution conversion, and further recompresses the data in the compression method used for facsimile communications. Therefore, the image can be converted to any image suitable for the facsimile, thus it is possible to make effective use of the photographed image.

Further, according to the example of the operation, when the image photographed in the document photographing mode is sent by an electronic mail, the image processing section **103** first expands the compressed image data stored in the recording medium **107**. The image processing section **103** then subjects the data to the processing such as clipping and binarization (conversion to a smaller number of gray levels in achromatic color), and further converts the data to a test document (text data) based on character recognition. Therefore, the data can be converted to any data format suitable for the electronic mail, thus it is possible to make effective use of the photographed image.

A digital camera according to a second embodiment is explained below with reference to FIG. **7** to FIG. **10**. FIG. **7** is a block diagram showing a configuration of the digital camera according to the second embodiment. In FIG. **7**, the same reference numerals are assigned to the sections that have same or similar functions to those of the digital camera according to the first embodiment shown in FIG. **1**. The digital camera according to the second embodiment shown in FIG. **7** has a destination memory **111** in addition to the components of the digital camera according to the first embodiment. The other parts of the configuration are the

same as those in first embodiment, therefore, explanation of these parts is omitted. Only different points are explained below.

FIG. **8** shows an example of the data structure of the destination memory **111**. This destination memory **111** is a nonvolatile memory, which manages information about destination to which the image data is to be transmitted. The destination memory **111** stores information, as shown in FIG. **8**, such as name of destination, type of destination, telephone number, mail address, guidance-frame display information, document size, and image deletion flag in correspondence with one another.

The guidance-frame display information is used to instruct whether a regular-size frame is to be displayed on the LCD **105** based on a document size, which helps the person photograph a subject in the document photographing mode. When guidance-frame display information is "1", the guidance frame is displayed, and when guidance-frame display information is "0", the guidance frame is not displayed. Document size is used to determine the size of a guidance frame when it is displayed. An image deletion flag is used to instruct whether the transmitted image data is to be deleted when an operator transmits the image data stored in the recording medium **107** to the selected destination. When the image deletion flag is "1", the transmitted image data is deleted, and when the image deletion flag is "0", the transmitted image data is not deleted and stored as it is. The contents of the data in the memory for destinations **111** is displayable on the LCD **105**, therefore, the operator can store the data in the memory on the LCD **105** through the operation section.

FIG. **9** shows a flow chart of photographing operation in the second embodiment. In FIG. **9**, the operator selects a photographing mode through the operation section **109** (step S**300**), and selects a destination from the destinations stored in the destination memory **111** (step S**301**).

The system control section **101** identifies the current photographing mode (step S**302**). When the current mode is not the document photographing mode but the normal photographing mode, the system control section **101** proceeds to step S**313**, and carries out normal photographing and recording.

On the other hand, when it is determined, at step S**303**, that the current mode is the document photographing mode, the system control section **101** monitors the information regarding the keys from the hard key interface section **108**. When it is determined that the release button has been pressed (step S**303**), the system control section **101** determines whether the guidance frame display has been specified by referring to the guidance-frame display information corresponding to the selected destination in the destination memory **111** (step S**304**). When the guidance frame display has not been specified, the system control section **101** proceeds to step S**306**.

At step S**304**, when the guidance frame display has been specified, the system control section **101** displays the guidance frame as shown in FIG. **4** (step S**305**), and starts picking up an image and displaying the preview of the image through the previously explained steps (step S**306**). The example of display of the guidance frame is the same as shown in FIG. **4**.

Since the guidance frame is displayed in the same manner as that in the first embodiment, explanation of the display is omitted. The frame to be displayed here is displayed according to the regular aspect ratio of a document size corresponding to the destination stored in the memory for destinations **111**.

The system control section **101** sets the operation of detecting the angle of photography in the image processing section **103**, whereas the image processing section **103** detects the angle of photography in response to the setting. The system control section **101** then reads the detected angle of photography (step S**307**). Further, the system control section **101** determines whether the angle of photography is vertical to the document (step S**308**). The method of detecting the angle of photography is the same as that in the first embodiment (see FIG. **5**), therefore, explanation of the method is omitted.

At step S**308**, on the other hand, when it is determined that the angle of photography is not vertical, the system control section **101** proceeds to step S**309**, and determines whether the release button has been pressed. When the release button has not been pressed, the system control section **101** returns to step S**303**. When the release button has been pressed, on the other hand, the system control section **101** notifies the operator of a message to the effect that the angle of photography is not vertical (guidance display or the like is performed). The angle of photography is then detected again (step S**307**).

At step S**308**, when it is determined that the angle of photography is vertical, the system control section **101** allows the image pickup section **102** to capture the image and also the image processing section **103** to compress the captured image in the same manner as that when the release button has been pressed in the normal photographing mode. Further, the system control section **101** records the compressed data in the recording medium **107** via the recording medium interface section **106** (step S**310**).

The system control section **101** reads the lens-to-subject distance (the distance from the digital camera to the document) detected during focusing at the time of photographing, from the image processing section **103**. The system control section **101** then calculates the magnification at the time of photography (a focal length of a lens/a lens-to-subject distance) (step S**311**), and records the magnification in the recording medium **107** in correlation with the photographed image together with the information for the frame type (step S**312**). When the guidance frame has not been displayed at step S**304**, the frame information is not recorded. For example, when Taro Yamada is selected as the destination, it is understood that the guidance-frame display information is "1" and the document size is A4 in the memory destination memory **111** in FIG. **8**. Therefore, the A4-size guidance frame is displayed.

In the second embodiment as explained above, the guidance-frame display information, to specify presence or absence of the guidance frame display, is stored in the destination memory **111** in correspondence with each destination. The system control section **101** refers to this destination memory **111** when the document photographing mode is selected, and displays or does not display the guidance frame according to the guidance-frame display information corresponding to the selected destination. Therefore, the guidance frame may be displayed or may not be displayed depending on the destination, thus the usability of the digital camera for the operator can be improved.

Further, in the second embodiment, the system control section **101** determines whether the guidance frame is to be displayed according to the frame display information stored in the destination memory **111**. However, whether or not the guidance frame is displayed may be automatically determined according to the attribute of the destination. When the type of destination is a printer, for example, it is required to match the image with the paper size such as A4 size,

therefore, the guidance frame is displayed. When the destination is a computer, on the other hand, it is not required to match the image with the paper size, therefore, the guidance frame need not be displayed.

Operation for communications in the second embodiment is explained below. FIG. **10** shows a flow chart of operation for communications in the second embodiment.

In FIG. **10**, the user first selects a destination stored in the destination memory **111** (step S**400**), and further selects an image to be transmitted (step S**401**). The system control section **101**, in response to the selections, reads the selected image data from the recording medium **107** (step S**402**), and identifies the photographing mode used when the image is photographed from the header information of the image. The system control section **101** then determines whether the image has been photographed in the document photographing mode (step S**403**). When the image has been photographed in any mode other than the document photographing mode, the system control section **101** proceeds to step S**407**, and transmits the image data as it is to the destination using the protocol corresponding to the destination via the communication interface section **110**.

On the other hand, at step S**403**, when the image has been photographed in the document photographing mode, the system control section **101** reads a file, where the magnification at the time of photography recorded in photographing and the frame type are recorded, from the recording medium **107** (step S**404**). However, when the guidance frame has not been displayed, the frame type is not recorded. The system control section **101** then determines whether the attribute of destination is a facsimile (step S**405**). When the attribute of destination is a facsimile, the system control section **101** proceeds to step S**413**, and transmits the read-out image data to the image processing section **103**. In response to reception of the data, the image processing section **103** expands the compressed image data, and then performs clipping to the data (step S**414**). In this clipping, the area determined uniquely based on the previously read-out frame type is clipped and processed. When the frame type has not been recorded, however, the clipping is not executed.

The image processing section **103** then performs the processing for scaling to the image (step S**415**). For example, the image processing section **103** changes the size of the image to the closest possible size to the real size of the photographed document using the value of the previously read-out magnification at the time of photography. More specifically, when a A4 document is photographed, the image is scaled so that the image is transmitted as the A4 document. Similarly, when a A3 document is photographed, the image is scaled so that the image is transmitted as the A3 document. In this case, the resolution of the image is also converted to the resolution defined in the facsimile communications.

Further, the image processing section **103** subjects the data to binarization (step S**416**). The processing for binarization can be performed by using the method disclosed, for example, in Japanese patent application laid open No. HEI 06-256907. The image processing section **103** then recompresses the binary-coded image data by the compression method used for facsimile communications (step S**417**). As the compression method, any method (MH, MR, or MMR), which is determined based on negotiation when communication is started, is used. The system control section **101** transmits the recompressed image data to the facsimile via the communication interface section **110** (step S**418**), and then the processing is completed.

On the other hand, at the step S**405**, when the attribute of destination is not a facsimile, the system control section **101** proceeds to step S**406**, and determines whether the attribute of destination is an electronic mail. When it is determined that the attribute of destination is an electronic mail, the image processing section **103** subjects the image data to expansion, clipping, and binarization (steps S**408** to S**410**) in the same manner as that of facsimile communications. When the frame type information has not been recorded, however, the clipping is not carried out.

The image processing section **103** then converts the data to a text document based on character recognition (step S**411**). The system control section **101** edits the converted text document appropriate as the contents of an electronic mail, sends the email via the communication interface section **110** (step S**412**), and then ends the processing.

At the step S**406**, when the attribute of the destination is not an electronic mail, the image data is transmitted as it is using the protocol in accordance with the destination (step S**407**).

The system control section **101** determines whether the image deletion flag corresponding to the destination is set to "1" by referring to the destination memory **111** (step S**419**). When the image deletion flag corresponding to the destination has been set to "1", the system control section **101** deletes the image file, which has been transmitted, stored in the recording medium **107** (step S**420**). On the other hand, when the image deletion flag is "0", the image file which has been transmitted is not deleted and stored as it is. The processing is completed with the step. For example, when Taro Yamada is selected as destination, it is understood that the image deletion flag is "1" in the destination memory **111** in FIG. **8**. Therefore, the transmitted image file is deleted.

In the second embodiment as explained above, the image deletion flag, to specify whether the transmitted image file is to be deleted, is stored in the destination memory **111** in correspondence with each destination. The system control section **101** refers to the destination memory **111** when the document photographing mode is selected, and deletes the transmitted image file based on the image deletion flag corresponding to the selected destination. Therefore, deletion or non-deletion of the transmitted image can be selected depending on the destination, thus the usability of the digital camera for the operator can be improved.

Further, in the second embodiment, the system control section **101** determines whether the transmitted image file is to be deleted based on the image deletion flag corresponding to the destination stored in the destination memory **111**. However, whether or not the image file is deleted may be automatically determined according to the destination. When the destination is a FAX, for example, the FAX sends back a response message about successful reception. Therefore, there will occur no problem even if the image is deleted. Thus, the transmitted image file is deleted. When the destination is a computer, on the other hand, the computer does not send back a response message about successful reception. Therefore, if any image, which may not have been properly received by the computer, is deleted, there may come up a problem that the image is lost. Therefore, the transmitted image file is not deleted to be on the safe side.

A digital camera according to a third embodiment is explained below with reference to FIG. **11** and FIG. **12**. This digital camera of the third embodiment has the same configuration as that of the first embodiment. However, the digital camera (system control section **101**) of the third

embodiment has a photographing/transmission mode in which a photographed image is instantly transmitted to a specified destination.

When photographing an image in the document photographing mode and instantly transmitting the image to the outside, the user selects, by operating the operation section **109**, the photographing/transmission mode, and also selects the document photographing mode with the photographing mode key. The user also selects a regular document size (A size, letter, or legal size) of an image to be captured with the regular document size setting key, and further selects the destination.

As shown in FIG. **11**, the system control section **101** first identifies the current photographing mode (step S**500**). When the current mode is the normal photographing mode, the system control section **101** proceeds to step S**110**, and carries out normal photographing and recording.

On the other hand, when it is determined, at step S**500**, that the current mode is the document photographing mode, the system control section **101** monitors the information regarding the pressed keys from the hard key interface section **108**. When it is determined that the release button has been pressed (step S**501**), the system control section **101** displays the guidance frame on the LCD **105** as shown in FIG. **4** (step S**502**). The system control section **101** then starts picking up a document image and displays the preview of the image (the subject is displayed on the monitor) (step S**503**). The example of the display of the guidance frame is the same as that of the first embodiment (FIG. **4**).

The system control section **101** issues an instruction to detect an angle of photography to the image processing section **103**. In response to reception of the instruction, the image processing section **103** detects the angle of photography to the subject, and the system control section **101** reads the detected angle of photography (step S**504**). The system control section **101** then determines whether the angle of photography is vertical (step S**505**). The method of detecting the angle of photography is the same as that of the first embodiment (see FIG. **5**), therefore, explanation of the method is omitted.

On the other hand, at step S**505**, when it is determined that the angle of photography is not vertical, the system control section **101** proceeds to step S**506**, and determines whether the release button has been pressed. When the release button has not been pressed, the system control section **101** returns to step S**501**. When the release button has been pressed, on the other hand, the system control section **101** notifies the operator of, for example, the fact that the angle of photography is not vertical (e.g., using the guidance display), and detects again the angle of photography (step S**504**).

When it is determined, at step S**505**, that the angle of photography is vertical, the system control section **101** allows the image pickup section **102** to capture an image in the same manner as that in the case where the release button has been pressed in normal photographing mode (step S**507**). The system control section **101** then reads the lens-to-subject distance (the distance from the digital camera **100** to the document), detected during focusing at the time of photography, from the image processing section **103**. The system control section **101** further calculates the magnification at the time of photography (a focal length of a lens/a lens-to-subject distance) (step S**508**).

As shown in FIG. **12**, the system control section **101** the determines whether the image has been photographed in the document photographing mode (step S**511**). When the image has been photographed in any mode other than the document photographing mode, the system control section **101** proceeds to step S**514**, and the image data is transmitted as it is via the communication interface section **110** using the protocol corresponding to the destination.

At step S**511**, on the other hand, when it is determined that the image has been photographed in the document photographing mode, the system control section **101** determines whether the attribute of the destination is a facsimile (step S**512**). When the attribute of the destination is a facsimile, the system control section **101** proceeds to step S**519**, and performs clipping to the image. In this clipping, the area determined uniquely based on the frame type is clipped and processed.

The image processing section **103** then performs the processing for scaling to the image (step S**520**). For example, the image processing section **103** changes the size of the image to the closest possible size to the real size of the photographed document using the value of the magnification at the time of photography. More specifically, when a A4-size document is photographed, the image is scaled so that the image is transmitted as a A4 document. Similarly, when a A3-size document is photographed, the image is scaled so that the image is transmitted as a A3 document. In this case, the resolution of the image is also converted to the resolution defined in the facsimile communications.

Further, the image processing section **103** subjects the data to binarization (step S**521**). The processing for binarization can be performed by using the method disclosed, for example, in Japanese patent application laid open No. HEI 08-125870. The image processing section **103** then recompresses the binary-coded image data by the compression method used for facsimile communications (step S**522**). As the compression method, any method (MH, MR, or MMR), which is determined based on negotiation when communication is started, is used. The system control section **101** transmits the recompressed image data to the facsimile via the communication interface section **110** (step S**523**), and then the processing is completed.

At the step S**512**, on the other hand, when it is determined that the attribute of the destination is not the facsimile, the system control section **101** proceeds to step S**513**, and determines whether the attribute of the destination is an electronic mail. When the attribute of destination is the electronic mail, the image processing section **103** subjects the image data to clipping and binarization (steps S**515** and S**516**) in the same manner as that of facsimile communications. The image processing section **103** then converts the data to a text document based on character recognition (step S**517**).

The system control section **101** edits the converted text document appropriate as the contents of an electronic mail, sends the email via the communication interface section **110** (step S**518**), and then ends the process. At the step S**513**, when it is determined that the attribute of the destination is not an electronic mail, the image data is transmitted as it is by the protocol in accordance with the destination (step S**514**).

As explained above, in the third embodiment, the document photographing/transmission mode in which a photographed image is instantly transmitted is provided. Therefore, it is possible to transmit a photographed image at once to the desired destination, thus, the usability of the digital camera for the operator can be improved.

In this third embodiment, the destination memory **111** (see FIG. **8**) may be provided like in the second embodiment. Accordingly, the guidance frame may or may not be displayed depending on the destination based on the guidance-frame display information corresponding to the destination

in the destination memory **111**. In addition, display or non-display of the guidance frame may automatically be selected according to the attribute of destination.

Further, in this third embodiment, the destination memory **111** (see FIG. **8**) may be provided like the second embodiment. Accordingly, the transmitted image file may be deleted based on the image deletion flag corresponding to a destination in the destination memory **111**. In addition, the transmitted image file may automatically be deleted according to the attribute of destination.

It should be understood that this invention is not limited by the embodiments and the appended claims are to be construed as embodying all modifications and alternative constructions that may occur to one skilled in the art which fairly fall within the basic teaching herein set forth.

According to one aspect of this invention, the expansion unit expands compressed image data photographed in the document photographing mode and stored in the storage unit. The image processing unit then subjects the data to any image processing that a destination requires. Therefore, the image photographed in the document photographing mode can be converted to any format suitable for the destination, thus it is possible to make effective use of the photographed image.

According to another aspect of this invention, the image processing unit subjects the image data photographed in the document photographing mode to any image processing that a destination requires. Therefore, the image photographed in the document photographing mode can be converted to any format suitable for the destination, thus it is possible to make effective use of the photographed image.

According to still another aspect of this invention, the expansion unit expands compressed image data photographed in the document photographing mode and stored in the storage unit. The image processing unit then subjects the data to the processing such as clipping, conversion to a smaller number of gray levels in achromatic color, and resolution conversion, and further recompresses the processed data. Therefore, the image photographed in the document photographing mode can be converted to any format suitable for a destination (e.g., a facsimile), thus it is possible to make effective use of the photographed image.

According to still another aspect of this invention, the image processing unit subjects the image data photographed in the document photographing mode to the processing such as clipping, conversion to a smaller number of gray levels in achromatic color, and resolution conversion, and further performs compression to the processed data. Therefore, the image photographed in the document photographing mode can be converted to any format suitable for a destination (e.g., a facsimile), thus it is possible to make effective use of the photographed image.

According to still another aspect of this invention, the expansion unit expands the compressed image data photographed in the document photographing mode and stored in the storage unit. The image processing unit then subjects the image data to the processing such as clipping, and conversion to a smaller number of gray levels in achromatic color, and further performs data processing based on character recognition. Therefore, the image photographed in the document photographing mode can be converted to any format suitable for a destination (e.g., a facsimile), thus it is possible to make effective use of the photographed image.

According to still another aspect of this invention, the image processing unit subjects the image data photographed in the document photographing mode to the processing such as clipping, and conversion to a smaller number of gray levels in achromatic color, and further performs data processing based on character recognition. Therefore, the image photographed in the document photographing mode can be converted to any format (e.g., a text document) suitable for a destination, thus it is possible to make effective use of the photographed image.

Further, the data for photographing conditions is stored in the storage unit in correlation with the compressed image data. Whereas the image processing unit subjects the image data to image processing based on the data for photographing conditions. Therefore, in addition to the above explained effect due to the invention, it is possible to easily subject the data to any image processing that a destination requires by utilizing this data for photographing conditions.

Further, the data communication unit which performs data communications with the outside is provided. Therefore, in addition to the above explained effect due to the invention, it is possible to perform data communications with the outside.

Further, the names of destinations, telephone numbers or addresses, and an image deletion flag that specifies whether image data is to be deleted after its transmission are stored in the memory in correlation with one another. Whereas the deletion unit deletes the image data transmitted via the data communication unit based on the image deletion flag in the memory. Therefore, in addition to the effect due to the invention, the transmitted image may or may not be deleted depending on the destination, thus the usability of the digital camera for the operator can be improved.

Further, the deletion unit deletes the image data transmitted via the data communication unit depending on the destination. Therefore, in addition to the effect due to the invention, the transmitted image may or may not be deleted depending on the destination, thus the usability of the digital camera for the operator can be improved.

According to still another aspect of this invention, in the document photographing mode, the display unit displays the guidance to notify a user of photographing conditions of a document during displaying of the picture of the subject on the monitor before it is photographed. Therefore, the user can fix the location of the document, thus the usability of the digital camera for the operator can be improved.

Further, the guidance display is provided with a frame display with which the user can recognize the area of regular-size paper. Therefore, in addition to the effect due to the invention, the user can fix the location of the document based on the regular-size paper, thus the usability of the digital camera for the operator can further be improved.

According to still another aspect of this invention, the angle of photography detection unit that detects the angle of photography is provided. In the document photographing mode, photographing is started when the angle of photography is substantially vertical to a subject. Therefore, the document can be photographed at the correct angle, thus the usability of the digital camera for the operator can be improved.

Further, the angle of photography detection unit recognizes the shape of the photographed subject and detects the angle of photography. Therefore, in addition to the effect due to the invention, it is possible to detect the correct angle of photography no matter how the document to be photographed is placed. Thus, it is possible to detect the angle of photography with a simple and low-cost configuration.

Further, the names of destinations, telephone numbers or addresses, and frame display information that specifies whether the guidance is to be displayed on photographing are stored in the memory in correlation with one another.

Whereas, the display control unit provides controls for displaying or not displaying the guidance based on the frame display information in the memory. Therefore, in addition to the effect due to the invention, it is possible to select between display and non-display of the guidance depending on the destination. Thus the usability of the digital camera for the operator can be improved.

Further, the display control unit provides controls for displaying or not displaying the guidance onto the display unit depending on a destination. Therefore, in addition to the effect due to the invention, it is possible to select between display and non-display of the guidance depending on the destination. Thus the usability of the digital camera for the operator can be improved.

Further, the operator can freely add or change the contents of the memory. Therefore, in addition to the effect due to the invention, the usability of the digital camera for the operator can further be improved.

According to still another aspect of this invention, there are provided the steps of monitoring a subject on the display unit in response to instructions for monitoring, displaying guidance on the display unit when the monitoring is performed, capturing an image and compressing the image data in response to instructions for photographing, storing the compressed image data in a storage unit, reading the compressed image data stored in the storage unit and expanding the data in response to instructions for transmission, subjecting the expanded image data to any image processing that a destination requires, and transmitting the image data, that has been subjected to image processing, to the destination. Therefore, the image can be converted to any format suitable for the destination, thus it is possible to make effective use of the photographed image.

According to still another aspect of this invention, there are provided the steps of monitoring a subject on the display unit in response to instructions for monitoring, displaying guidance on the display unit when the monitoring is performed, capturing an image in response to instructions for photographing, subjecting the data of the captured image to any image processing that a destination requires, and transmitting the image data, that has been subjected to image processing, to the destination. Therefore, the image can be converted to any format suitable for the destination and immediately be transmitted, thus it is possible to make effective use of the photographed image.

The present document incorporated by reference the entire contents of Japanese priority documents, HEI 11-090224 filed in Japan on Mar. 30, 1999 and 2000-12217 filed in Japan on Jan. 20, 2000.

Although the invention has been described with respect to a specific embodiment for a complete and clear disclosure, the appended claims are not to be thus limited but are to be construed as embodying all modifications and alternative constructions that may occur to one skilled in the art which fairly fall within the basic teaching herein set forth.

What is claimed is:

1. A digital camera having a normal photographing mode and a document photographing mode, said digital camera comprising:

an image pickup unit which captures an image of a subject and converts the image to image data;

an angle of photography detection unit which detects an angle of photography with respect to a surface of a document as the subject in the document photographing mode and prevents capturing the image until a suitable angle of photography is detected in order to minimize distortions in the image captured of the document;

a compression unit which compresses the image data and generates a compressed image data;

a storage unit which stores the compressed image data;

an expansion unit which expands the compressed image data;

a selection unit with which any of the normal photographing mode and the document photographing mode can be selected, and with which a destination to receive the image data can be selected; and

an image processing unit which subjects the image data to image processing depending on the selected photographing mode,

wherein said expansion unit expands the compressed image data acquired in the document photographing mode and stored in said storage unit, and then said image processing unit subjects this data to an image processing that a selected destination requires, prior to providing the image data to the destination.

2. The digital camera according to claim **1**, wherein, in the document photographing mode, data related to the conditions during photography are stored in said storage unit in correlation with the compressed image data, and said image processing unit subjects the image data to image processing based on the data related to the conditions during photography.

3. The digital camera according to claim **1** further comprising a data communication unit which performs data communications with the outside.

4. The digital camera according to claim **3** further comprising:

a memory which stores the names of destinations, telephone numbers or addresses, and an image deletion flag that specifies whether the image data is to be deleted after its transmission in correlation with one another; and

a deletion unit which deletes the image data after the image data has been transmitted by said data communication unit based on the image deletion flag in said memory.

5. The digital camera according to claim **3** further comprising a deletion unit which deletes the image data after the image data has been transmitted by said data communication unit depending on the selected destination.

6. The digital camera according to claim **4**, wherein an operator can freely add or change the contents of said memory.

7. A digital camera having a normal photographing mode and a document photographing mode, said digital camera comprising:

an image pickup unit which captures an image of a subject and converts the image to image data;

an angle of photography detection unit which detects an angle of photography with respect to a surface of a document as the subject in the document photographing mode and prevents capturing the image until a suitable angle of photography is detected in order to minimize distortions in the image captured of the document;

a selection unit with which any of the normal photographing mode and the document photographing mode can be selected, and with which a destination to receive the image data can be selected;

an image processing unit which subjects the image data acquired in the document photographing mode to an

image processing that a selected destination requires, prior to providing the image data to the destination.

8. The digital camera according to claim **7** further comprising a data communication unit which performs data communications with the outside.

9. The digital camera according to claim **8** further comprising:

a memory which stores the names of destinations, telephone numbers or addresses, and an image deletion flag that specifies whether the image data is to be deleted after its transmission in correlation with one another; and

a deletion unit which deletes the image data after the image data has been transmitted by said data communication unit based on the image deletion flag in said memory.

10. The digital camera according to claim **8** further comprising a deletion unit which deletes the image data after the image data has been transmitted by said data communication unit depending on the selected destination.

11. The digital camera according to claim **9**, wherein an operator can freely add or change the contents of said memory.

12. A digital camera having a normal photographing mode and a document photographing mode, said digital camera comprising:

an image pickup unit which captures an image of a subject and converts the image to image data;

an angle of photography detection unit which detects an angle of photography with respect to a surface of a document as the subject in the document photographing mode and prevents capturing the image until a suitable angle of photography is detected in order to minimize distortions in the image captured of the document;

a compression unit which compresses the image data and generates a compressed image data;

a storage unit which stores the compressed image data;

an expansion unit which expands the compressed image data;

a selection unit with which any of the normal photographing mode and the document photographing mode can be selected, and with which a destination to receive the image data can be selected; and

an image processing unit which subjects the expanded image data to image processing depending on the selected photographing mode,

wherein, based on a selected destination, said expansion unit expands the compressed image data acquired in the document photographing mode and stored in said storage unit, and then said image processing unit subjects the data to the processing for clipping, conversion to a smaller number of gray levels in achromatic color, and resolution conversion, and once more compresses the data, prior to providing the image data to the destination.

13. The digital camera according to claim **12**, wherein, in the document photographing mode, data related to the conditions during photography are stored in said storage unit in correlation with the compressed image data, and said image processing unit subjects the image data to image processing based on the data related to the conditions during photography.

14. The digital camera according to claim **12** further comprising a data communication unit which performs data communications with the outside.

15. The digital camera according to claim **14** further comprising:

a memory which stores the names of destinations, telephone numbers or addresses, and an image deletion flag that specifies whether the image data is to be deleted after its transmission in correlation with one another; and

a deletion unit which deletes the image data after the image data has been transmitted by said data communication unit based on the image deletion flag in said memory.

16. The digital camera according to claim **14** further comprising a deletion unit which deletes the image data after the image data has been transmitted by said data communication unit depending on the selected destination.

17. The digital camera according to claim **15** wherein an operator can freely add or change the contents of said memory.

18. A digital camera having a normal photographing mode and a document photographing mode, said digital camera comprising:

an image pickup unit which captures an image of a subject and converts the image to image data;

an angle of photography detection unit which detects an angle of photography with respect to a surface of a document as the subject in the document photographing mode and prevents capturing the image until a suitable angle of photography is detected in order to minimize distortions in the image captured of the document;

a selection unit with which any of the normal photographing mode and the document photographing mode can be selected, and with which a destination to receive the image data can be selected; and

an image processing unit which, based on the selected destination, subjects the image data acquired in the document photographing mode to the processing for clipping, conversion to a smaller number of gray levels in achromatic color, and resolution conversion, and once more compresses the data, prior to providing the image data to the destination.

19. The digital camera according to claim **18** further comprising a data communication unit which performs data communications with the outside.

20. The digital camera according to claim **19** further comprising:

a memory which stores the names of destinations, telephone numbers or addresses, and an image deletion flag that specifies whether the image data is to be deleted after its transmission in correlation with one another; and

a deletion unit which deletes the image data after the image data has been transmitted by said data communication unit based on the image deletion flag in said memory.

21. The digital camera according to claim **19** further comprising a deletion unit which deletes the image data after the image data has been transmitted by said data communication unit depending on the selected destination.

22. The digital camera according to claim **20**, wherein an operator can freely add or change the contents of said memory.

23. A digital camera having a normal photographing mode and a document photographing mode, said digital camera comprising:

an image pickup unit which captures an image of a subject and converts the image to image data;

an angle of photography detection unit which detects an angle of photography with respect to a surface of a document as the subject in the document photographing mode and prevents capturing the image until a suitable angle of photography is detected in order to minimize distortions in the image captured of the document;

a compression unit which compresses the image data and generates a compressed image data a storage unit which stores the compressed image data;

an expansion unit which expands the compressed image data;

a selection unit with which any of the normal photographing mode and the document photographing mode can be selected, and with which a destination to receive the image data can be selected; and

an image processing unit which subjects the image data to image processing depending on the selected photographing mode,

wherein, based on the selected destination, said expansion unit expands the compressed image data acquired in the document photographing mode and stored in said storage unit, and then said image processing unit subjects this data to the processing for clipping, conversion to a smaller number of gray levels in achromatic color, and once more compresses the data, prior to providing the image data to the destination.

24. The digital camera according to claim **23**, wherein, in the document photographing mode, data related to the conditions during photography are stored in said storage unit in correlation with the compressed image data, and said image processing unit subjects the image data to image processing based on the data related to the conditions during photography.

25. The digital camera according to claim **23** further comprising a data communication unit which performs data communications with the outside.

26. The digital camera according to claim **25** further comprising:

a memory which stores the names of destinations, telephone numbers or addresses, and an image deletion flag that specifies whether the image data is to be deleted after its transmission in correlation with one another; and

a deletion unit which deletes the image data after the image data has been transmitted by said data communication unit based on the image deletion flag in said memory.

27. The digital camera according to claim **25** further comprising a deletion unit which deletes the image data after the image data has been transmitted by said data communication unit depending on the selected destination.

28. The digital camera according to claim **26**, wherein an operator can freely add or change the contents of said memory.

29. A digital camera having a normal photographing mode and a document photographing mode, said digital camera comprising:

an image pickup unit which captures an image of a subject and converts the image to image data;

an angle of photography detection unit which detects an angle of photography with respect to a surface of a document as the subject in the document photographing mode and prevents capturing the image until a suitable angle of photography is detected in order to minimize distortions in the image captured of the document;

a selection unit with which any of the normal photographing mode and the document photographing mode can be selected, and with which a destination to receive the image data can be selected; and

an image processing unit which, based on the selected destination, subjects the image data acquired in the document photographing mode to the processing for clipping, conversion to a smaller number of gray levels in achromatic color, and character recognition, prior to providing the image data to the destination.

30. The digital camera according to claim **29** further comprising a data communication unit which performs data communications with the outside.

31. The digital camera according to claim **30** further comprising:

a memory which stores the names of destinations, telephone numbers or addresses, and an image deletion flag that specifies whether the image data is to be deleted after its transmission in correlation with one another; and

a deletion unit which deletes the image data after the image data has been transmitted by said data communication unit based on the image deletion flag in said memory.

32. The digital camera according to claim **30** further comprising a deletion unit which deletes the image data after the image data has been transmitted by said data communication unit depending on a destination.

33. The digital camera according to claim **31**, wherein an operator can freely add or change the contents of said memory.

34. A digital camera having a normal photographing mode and a document photographing mode, said digital camera comprising:

an image pickup unit which captures an image of a subject and converts the image to image data;

an angle of photography detection unit which detects an angle of photography with respect to a surface of a document as the subject in the document photographing mode and prevents capturing the image until a suitable angle of photography is detected in order to minimize distortions in the image captured of the document;

a compression unit which compresses the image data and generates a compressed image data;

a storage unit which stores the compressed image data;

a selection unit with which any of the normal photographing mode and the document photographing mode can be selected, and with which a destination to receive the image data can be selected;

a display unit which displays the image of the subject on a monitor before the image is photographed; and

an image processing unit which subjects the image data to image processing depending on the selected photography mode and to image processing that a selected destination requires, prior to providing the image data to the destination;

wherein, in the document photographing mode, said display unit displays guidance to notify a user of the conditions during photography when the image of the subject is being displayed on the monitor.

35. The digital camera according to claim **34**, wherein the guidance display is provided with a frame display with which the user recognizes the area of regular-size paper.

36. The digital camera according to claim **34** further comprising:

a memory which stores the names of destinations, telephone numbers or addresses, and frame display information that specifies whether the guidance is to be displayed on photographing in correlation with one another,

wherein said display unit displays or does not display the guidance based on the frame display information stored in said memory.

37. The digital camera according to claim **34**, wherein said display unit displays or does not display the guidance depending on the selected destination.

38. The digital camera according to claim **36**, wherein an operator can freely add or change the contents of said memory.

39. A digital camera having a normal photographing mode and a document photographing mode, said digital camera comprising:

an image pickup unit which captures an image of a subject and converts the image to image data;

an angle of photography detection unit which detects an angle of photography with respect to a surface of a document as the subject in the document photographing mode and prevents capturing the image until a suitable angle of photography is detected in order to minimize distortions in the image captured of the document;

a selection unit with which any of the normal photographing mode and the document photographing mode can be selected, and with which a destination to receive the image data can be selected;

a display unit which displays the image of the subject on a monitor before the image is photographed; and

an image processing unit which subjects the image data to image processing depending on the selected photography mode and to image processing that a selected destination requires, prior to providing the image data to the destination;

wherein, in the document photographing mode, said display unit displays guidance to notify a user of the conditions during photography when the image of the subject is being displayed on the monitor.

40. The digital camera according to claim **39**, wherein the guidance display is provided with a frame display with which the user recognizes the area of regular-size paper.

41. The digital camera according to claim **39** further comprising:

a memory which stores the names of destinations, telephone numbers or addresses, and frame display information that specifies whether the guidance is to be displayed on photographing in correlation with one another,

wherein said display unit displays or does not display the guidance based on the frame display information stored in said memory.

42. The digital camera according to claim **39**, wherein said display unit displays or does not display the guidance depending on a destination.

43. The digital camera according to claim **41**, wherein an operator can freely add or change the contents of said memory.

44. A digital camera having a normal photographing mode and a document photographing mode, said digital camera comprising:

an image pickup unit which captures an image of a subject and converts the image to image data;

a compression unit which compresses the image data and generates a compressed image data;

a storage unit which stores the compressed image data;

a selection unit with which any of the normal photographing mode and the document photographing mode can be selected, and with which a destination to receive the image data can be selected; and

an angle of photography detection unit which detects an angle of photography with respect to a surface of the subject,

wherein, in the document photographing mode, photography is started only when the angle of photography is substantially vertical in order to minimize distortions in the image captured of the subject.

45. The digital camera according to claim **44**, wherein said angle of photography detection unit detects the angle of photography from the shape of the photographed subject.

46. A digital camera having a normal photographing mode and a document photographing mode, said digital camera comprising:

an image pickup unit which captures an image of a subject and converts the image to image data;

a selection unit with which any of the normal photographing mode and the document photographing mode can be selected, and with which a destination to receive the image data can be selected;

an angle of photography detection unit which detects an angle of photography with respect to the surface of a subject; and

an image processing unit which subjects the image data to image processing depending on the selected photography mode and to image processing that a selected destination requires, prior to providing the image data to the destination;

wherein, in the document photographing mode, photography is started only when the angle of photography is substantially vertical in order to minimize distortions in the image captured of the subject.

47. The digital camera according to claim **46**, wherein said angle of photography detection unit detects the angle of photography from the shape of the photographed subject.

48. A document photographing and transmitting method of a digital camera, said method comprising:

monitoring a subject on a display unit in response to instructions for monitoring;

displaying guidance on said display unit when the monitoring is performed;

capturing an image, converting the image to image data, and compressing the image data in response to instructions for photographing;

detecting an angle of photography before capturing the image and permitting image capture of a document only if the angle of photography has a predetermined value in order to minimize distortions in the image captured of the document;

storing the compressed image data in a storage unit;

selecting a destination to receive the image data;

reading the compressed image data stored in the storage unit and expanding the data in response to instructions for transmission;

subjecting the expanded image data to an image processing that the selected destination requires, prior to providing the image data to the destination; and

transmitting the image data, that has been subjected to image processing, to the selected destination.

49. A document photographing and transmitting method of a digital camera, said method comprising:

monitoring a subject on a display unit in response to instructions for monitoring;

displaying guidance on said display unit when the monitoring is performed;

capturing an image and converting the image to image data in response to instructions for photographing;

detecting an angle of photography before capturing the image and permitting image capture of a document only if the angle of photography has a predetermined value in order to minimize distortions in the image captured of the document;

selecting a destination to receive the image data;

subjecting the image data to an image processing that the selected destination requires, prior to providing the image data to the destination; and

transmitting the image data, that has been subjected to image processing, to the selected destination.

50. A digital camera according to claim **1**, wherein said image processing unit recognizes a shape of said document to calculate a current angle of photography.

51. A digital camera according to claim **7**, wherein said image processing unit recognizes a shape of said document to calculate a current angle of photography.

52. A digital camera according to claim **12**, wherein said image processing unit recognizes a shape of said document to calculate a current angle of photography.

53. A document photographing and transmitting method according to claim **48**, wherein in said detecting an angle of photography, a shape of said document is recognized and a current angle of photography is detected based on the shape of said document.

54. A digital camera according to claim **1**, wherein a user arranges the digital camera such that the angle of photography is substantially perpendicular with respect to the surface of the document, in order to obtain the suitable angle of photography in the document photography mode.

55. A digital camera according to claim **7**, wherein a user arranges the digital camera such that the angle of photography is substantially perpendicular with respect to the surface of the document, in order to obtain the suitable angle of photography in the document photography mode.

56. A digital camera according to claim **12**, wherein a user arranges the digital camera such that the angle of photography is substantially perpendicular with respect to the surface of the document, in order to obtain the suitable angle of photography in the document photography mode.

57. A document photographing and transmitting method according to claim **48**, said method further comprising:

arranging the digital camera by a user such that the angle of photography is substantially perpendicular with respect to a surface of the document.

58. A digital camera according to claim **54**, wherein the image processing unit does not correct distortions related to the angle of photography of the image of the subject.

59. A digital camera according to claim **55**, wherein the image processing unit does not correct distortions related to the angle of photography of the image of the subject.

60. A digital camera according to claim **56**, wherein the image processing unit does not correct distortions related to the angle of photography of the image of the subject.

61. A document photographing and transmitting method according to claim **57**, wherein said subjecting the image processing does not correct the distortions related to the angle of photography of the image.

* * * * *