UNITED STATES PATENT AND TRADEMARK OFFICE

_____

BEFORE THE PATENT TRIAL AND APPEAL BOARD

_____

DECLARATION OF DR. ANTHONY ACAMPORA

In Support of Inter Partes Review
of U.S. Patent No. 10,334,499

Table of Contents

I. Introduction 1

A. Engagement 1

B. Qualifications 2

II. Materials Considered 8

III. Relevant Legal Principles 10

A. Person of Ordinary Skill in the Art 10

B. Claim Construction Standard 11

C. Anticipation and Obviousness Law 12

IV. Technology Background: Distributed Antenna Systems 16

V. Overview of the '499 Patent 21

A. The '499 Specification 21

B. The '499 Claims 23

C. The '499 Prosecution History 40

VI. Summary of the Asserted Prior Art 42

A. Primary References 42

1. "Wu": U.S. Patent Application Pub. No. 2010/0128676.....42

2. "Hettstedt": U.S. Patent Pub. No. 2008/0119198.....46

B. Secondary References 48

1. "Sabat '426": U.S. Patent App. Pub. No. 2009/0180426A1 48

2. "Sabat '552": U.S. Patent No. 6,963,552.....49

3. OBSAI: Reference Point 3 Specification Version 3.1.....49

VII. Ground 1: Wu anticipates claims 1-5, 8-11, 13-16, 18-19.....64

A. Independent Claim 1 64

1. Element 1A: "A system for transporting wireless communications, comprising:" 67

2. Element 1B: "a baseband unit".....68

3. Element 1C: "a plurality of signal sources, including at least a first signal source and a second signal source" 71

4. Element 1D: "a plurality of remote units, including at least a first remote unit and a second remote unit" 72

5. Element 1E: "wherein the baseband unit comprises a plurality of interfaces to communicatively couple the baseband unit to the plurality of signal sources" 73

6. Element 1F: "wherein the baseband unit is configured to receive a plurality of radio resources from the first signal source and the second signal source" 75

7. Element 1G: "wherein the baseband unit is configured to send a digital representation of a first set of radio resources to the first remote unit at a first point in time, the first set of radio resources for transmission at an antenna of the first remote unit" 76

8. Element 1H: "wherein the baseband unit is configured to send a digital representation of a second set of radio resources to the first remote unit at a second point in time, the second set of radio resources for transmission at the antenna of the first remote unit;" 78

9. Element 1I: "wherein a number of radio resources in the first set of radio resources is different from a number of radio resources in the second set of radio resources" 79

10. Element 1J: "wherein the baseband unit is configured to receive digital signals from each of the plurality of remote units." ..79

B. Independent Claim 8 81

C. Independent Claim 14 84

D. Dependent Claims 85

1. Claims 2, 9, 19: 85

2. Claims 3, 10, and 15: 99

3. Claims 4, 11, 16 and 13, 18: 101

4. Claim 5: 103

VIII. Ground 2: Wu alone or combined with Sabat '426 renders obvious claims 1-5, 8-11, 13-16, 18-19. 104

A. Baseband "unit" 104
B. Claims 4, 11, 16 and 13, 18 106
IX. Ground 3: Wu and Sabat '552 render claims 6-7, 12 and 17 obvious 108
A. Claims 6, 12, 17: 108
B. Claim 7: 112
X. Ground 4: The claims are obvious in further view of OBSAI 113
XI. Ground 5: Hettstedt anticipates claims 1-5, 8-11, 13-16, 18-19 114
A. Independent Claim 1 114
1. Element 1A 114
2. Element 1B 116
3. Element 1C 120
4. Element 1D 122
5. Element 1E 123
6. Element 1F 127
7. Element 1G 130
8. Element 1H 144
9. Element 1I 150
10. Element 1J 152
B. Independent Claim 8 154
1. Preamble (Element 8A) 154
2. Body of the Claim (Elements 8B-8G) 155
C. Independent Claim 14 157
1. Preamble (Element 14A) 157
2. Body of the Claim (Elements 14A-14E) 161
D. Dependent Claims 162
1. Claims 2, 9, 19 162
2. Claims 3, 10, and 15 164
3. Claims 4, 11, and 16: 168
4. Claim 5: 173

5. Claims 13 and 18 174

XII. Ground 6: Hettstedt plus Wu renders obvious claims 1-5, 8-11, 13-16, 18-19 181

A. Independent Claims 1, 8, 14 181

B. Dependent Claims 4, 11, 16 190

C. Dependent Claim 5 192

D. Dependent Claims 13 and 18 194

E. Dependent Claims 2-3, 9-10, 19 196

XIII. Ground 7: Hettstedt plus Sabat '552 renders obvious claims 6-7, 12, 17 196

Claims Listing Appendix A1

I, Anthony Acampora, Ph.D., declare as follows.

I. Introduction

A. Engagement

1. I have been retained by CommScope Technologies LLC, ("CommScope") to provide expert opinions in connection with a petition for inter partes review before the United States Patent and Trademark Office. This declaration involves my expert opinions and expert knowledge related to U.S. Patent No. 10,334,499 ("the '499 Patent"), titled "Distributed Antenna System" and its field of endeavor.

2. I have been asked to provide my independent technical review, analysis, insights, and opinions regarding the '499 Patent and the references that form the basis for the grounds for anticipation and obviousness set forth in the Petition for Inter Partes Review of the '499 Patent. The statements made herein are based on my own knowledge and opinions.

3. To summarize the opinions stated herein, it is my opinion that the claims of the '499 patent are invalid as obvious based on the following grounds:

	Basis for Invalidity	Applicable Claims
Ground 1	Wu anticipates these claims.	1-5, 8-11, 13-16, 18-19
Ground 2	Wu alone or plus Sabat '426 makes obvious these claims.	1-5, 8-11, 13-16, 18-19

Ground 3	Wu plus Sabat '552 makes obvious these claims.	6-7, 12, 17
Ground 4	Any of grounds 1-3 in further view of the OBSAI standard	1-19
Ground 5	Hettstedt anticipates these claims.	1-5, 8-11, 13-16, 18-19
Ground 6	Hettstedt plus Wu makes obvious these claims.	1-5, 8-11, 13-16, 18-19
Ground 7	Hettstedt plus Sabat '552 makes obvious these claims.	6-7, 12, 17

B. Qualifications

4. I received my Bachelor of Science, Master of Science, and Doctor of Philosophy degrees, all in Electrical Engineering, from the Polytechnic Institute of Brooklyn in 1968, 1970, and 1973, respectively. Both my Master's thesis and my Ph.D. dissertation involved theoretical aspects of electromagnetic wave propagation in plasma and gaseous media. From June 1968 through September 1988, I was employed at AT&T Bell Laboratories in various engineering, research, and managerial positions, all in the general area of telecommunications.

5. My initial work at Bell Laboratories (1968-1974) involved high power radar design and development, and signal design and processing for extraction of pertinent information from radar target returns, both focused on anti-ballistic missile defense applications. A modern radar system operates by transmitting carefully designed radio signals toward a target, and processing the reflected radio signals arriving back at the radar, to determine target location, velocity, and key

features. For ballistic missile defense applications, it is also important to distinguish real warheads from decoys.

6. My next assignment at Bell Laboratories (1974-1981) was in the Radio Research Laboratory, an organization responsible for basic research, where I was involved in new discovery and proposals involving novel approaches for communication satellite systems. Communication satellites are radio systems, often world-wide in scope, intended to enable wireless communications among terrestrial users from a platform of one or more Earth-orbiting satellites. My contributions to the communication satellite state-of-the-art included (1) strategies to efficiently encode and recover digital information sent to and from the satellites via high capacity radio beams; (2) novel systems and on-board satellite switching approaches that use multiple radio beams (so-called spot beams), each focused on a small portion of Earth, to vastly increase the capacity of a communication satellite by enabling the radio spectrum to be re-used among the spot beams; (3) strategies to acquire and maintain synchronization of radio signals sent to and from a satellite; and (4) a novel approach to overcome the effects of rain-induced attenuation of the radio beams that dynamically assigns available radio resources to those spots on Earth where rain attenuation is instantaneously most severe.

7. I was promoted to Supervisor of the Data Theory Group at Bell Laboratories in 1981, with responsibility for exploratory development of local area

data networks. These are packet-switching networks intended to enable very high speed computer, voice, and video communications via on-demand capture of a shared transmission channel. Several new approaches were suggested and studied.

8. In 1984, I was promoted to Head of the Network Systems Research Department (one of several departments within the Radio Research Laboratory, later to become the Communications Systems Research Laboratory, at Bell Laboratories) with responsibility for new architectures for packet switching and multiwavelength optical networks, wireless networks for broadband local access, and integrated voice/data wireless networks. Contributions included (1) a system architecture for using a raster of focused radio beams to deliver broadband service to a large number of buildings from a central location within a city; (2) a novel packet switching architecture for Internet-like wide area packet networks; and (3) a wide area multimedia networking strategy to enable access to the enormous information-bearing capacity potential of optical fiber cabling.

9. I was promoted to Director of the Transmission Technology Laboratory in 1987, a group of approximately 80 people with broad charter for exploratory development of (1) transmission and switching systems for next-generation Internet-like packet-based networks and (2) applications for digital signal processing in telecommunications.

10. I left AT&T Bell Laboratories in September 1988 to become Professor of Electrical Engineering and Director of the Center for Telecommunications Research at Columbia University. Here, my responsibilities were three-fold: (1) education of students in the field of telecommunications, (2) pursuit of a program of independent research in the area of telecommunications, and (3) management of a National Science Foundation Engineering Research Center devoted to many aspects of telecommunications and founded for the express purpose of improving American economic competitiveness through research, education, and transfer of relevant technical findings from academia to the telecommunications industry. Research programs at the Center for Telecommunications Research were focused on multiwavelength fiber optical networks, wireless communications, image and video communications, network management and control, and underlying photonic and electronic devices and materials. Contributions included (1) laboratory implementation and feasibility demonstration of the world's first multiwavelength packet switched optical network; (2) new approaches for randomly accessing a shared radio channel; (3) strategies for enabling rapid handoff among radio cells in a high capacity cellular network; (4) a rigorous understanding of multiwavelength optical network capabilities and limitations; and (5) algorithms for the efficient resource management and control of packet based multimedia networks.

11. In August 1995, I left Columbia University to become Professor of Electrical and Computer Engineering and Director of the Center for Wireless Communications at the University of California, San Diego (UCSD). Again, my responsibilities were threefold: (1) education of students in the field of wireless communications, (2) pursuit of a program of independent research in the area of wireless communications, and (3) management of an industrially funded research center devoted exclusively to wireless communications. Contributions included (1) strategies for allowing the use of so-called "smart" antennas in cellular-based packet radio networks; (2) a proposal for a new city-wide network based on a wireless mesh-based approach using either focused wireless beams of light or focused radio beams, intended to deliver broadband services to buildings and/or to connect wireless radio cells with the world-wide fiber-optic backbone network; and (3) mobility management strategies for high speed packet-based wireless networks. The second of these contributions has served as the technical foundation for at least two new venture-backed telecommunications equipment companies, one of which I co-founded.

12. In December 1999, I resigned as Director of the Center for Wireless Communications to pursue full-time research and education as a Professor of Electrical and Computer Engineering at UCSD, and on January 1, 2008, I became

Professor of Electrical and Computer Engineering, Emeritus, Recalled to Research, maintaining an active research program.

13. At UCSD, I have taught courses on (1) probability, (2) random processes, and (3) wireless networks. My current research is focused on (1) broadband wireless networks for local access to homes, schools, and businesses; (2) wireless spaces to enable ubiquitous voice, data, and video wireless communications within buildings, and (3) so-called ad-hoc (self-organizing) networks of wireless sensor nodes for business and homeland security applications.

14. Over the course of my career, I have published (individually or with collaborators) over 170 original papers in scholarly journals and professional conference proceedings, and I am the named inventor or co-inventor on 40 U.S. patents.

15. I wrote one of the world's first textbooks devoted to broadband telecommunications, entitled An Introduction to Broadband Networks. I have lectured extensively on telecommunications in general and wireless communications in particular, and I have regularly attended, and continue to attend, numerous world-wide professional conferences. I have chaired several major telecommunications conferences, and I have chaired numerous professional conference technical sessions. I read the technical literature extensively, and subscribe to several leading journals in the field of telecommunications in general

and wireless communications in particular. Over the years, I have delivered many 3 to 5 day intensive short courses on telecommunications and wireless communications to professional audiences of practicing engineers and others. In 1988, I was elected to the grade of Fellow of the Institute of Electrical and Electronics Engineers, cited for contributions to high capacity digital satellite systems and broadband local communication networks.

16. I am being compensated for my time at the rate of $725 per hour for time spent on this matter. I have no interest in the outcome of this proceeding.

II. Materials Considered

17. My technical review, analysis, insights, and opinions are based on my experience and other qualifications discussed above, as well as my study of relevant materials.

18. I have reviewed and am familiar with the '499 patent specification, claims, and prosecution history. I have been asked to assume for the purpose of this analysis that the priority date of the '499 patent is February 7, 2011, which is the date of Provisional Application No. 61/439,940.

19. I have reviewed and am familiar with each exhibit cited herein. I confirm that to the best of my knowledge the accompanying exhibits are true and accurate copies of what they purport to be, and that an expert in the field would

reasonably rely on them to formulate opinions such as those set forth in this declaration.

Exhibit No.	Exhibit Description
1001	U.S. Patent No. 10,334,499
1002	Prosecution History of U.S. Patent No. 10,334,499
1003	(Present) Declaration of Dr. Anthony Acampora
1004	*Curriculum Vitae* of Dr. Anthony Acampora
1005	U.S. Patent Application Publication No. 2010/0128676 A1 to Wu ("Wu")
1006	U.S. Patent Application Publication No. 2008/0119198 A1 to Hettstedt ("Hettstedt")
1007	Common Public Radio Interface (CPRI) Specification version 4.0 (2008-06-30)
1008	OBSAI "Reference Point 3 Specification Version 3.1" (November 13, 2006)
1009	OBSAI "BTS System Reference Document Version 2.0" (April 27, 2006)
1010	U.S. Patent App. Pub. No. 2009/0180426 Al to Sabat et al. ("Sabat '426")
1011	U.S. Patent No. 6,963,552 B2 to Sabat et al. ("Sabat '552")
1012	U.S. Patent No. 10,080,178 ("the '178 patent")
1013	IPR2020-01473 Institution Decision ('178 patent IPR)
1014	IPR2020-01473 Judgment ('178 patent IPR)
1015	IPR2020-01473 Petition ('178 patent IPR)
1016	U.S. Patent No. 9,531,473 ("the '473 patent")
1017	IPR2018-00571 Final Written Decision ('473 patent IPR)
1018	Declaration of Dr. Peter Kenington
1020	Patent Owner's Preliminary Infringement Contentions
1021	Provisional Patent App. No. 61/439,940
1022	U.S. Patent Application Pub. No. 200/60094470 ("Wake")
1024	Preliminary infringement contentions by Patent Owner (Dali) in Civil Action No. 6:22-CV-00104-ADA (W.D. Tex.)
1026	U.S. Patent No. 7,286,507 ("Oh")
1027	Patent Owner's preliminary response in IPR2020-01466
1028	Claim construction order from
1029	Patent Owner's Preliminary response in IPR2020-01430
1030	U.S. Patent Number 6,785,558 ("Stratford")
1031	U.S. Patent Number 8,737,454 ("Wala")
1032	U.S. Patent Number 8,346,091 ("Kummetz")

1033	U.S. Patent Publication No. 2010/0296816 ("Larsen").
1034	U.S. Patent Number 7,848,747 ("Wala-747")
1035	U.S. Patent Number 8,204,544 ("Beaudin")
1036	U.S. Patent Application Publication No. 2005/0157675 ("Feder")
1037	File History of Patent No. 10,080,178 File History
1042	U.S. Patent Application Publication No. 2007/0177552 A1

III. Relevant Legal Principles

A. Person of Ordinary Skill in the Art

20. I have been informed that a person of ordinary skill in the art ("POSITA") is a person who is presumed to have complete knowledge of the relevant prior art and who would think along the lines of conventional wisdom in that art. The person of ordinary skill in the art has ordinary creativity and does not have extraordinary skill, e.g., is not an expert. I have been informed that factors to consider in determining the level of ordinary skill in the art include the educational level of workers in the field, the types of problems addressed in the art, prior-art solutions to such problems, how quickly innovations are made, and the complexity of the technology.

21. The '499 patent relates to distributed antenna systems in wireless communication systems. *See* EX-1001 ('499 Patent) Title; Abstract; 1:21-23. In wireless communications, a distributed antenna system is used by a wireless service provider to distribute communication signals to or from mobile devices such as cell phones into coverage areas that are difficult to reach using

conventional base station antennas. For example, conventional base stations often have difficulty sending wireless signals into buildings. In view of the factors mentioned above and the discussion of the technical background herein, it is my opinion that a person of ordinary skill in the art of the '499 patent would have a Bachelor's Degree in Electrical Engineering or equivalent field of study, with 2-3 years of work experience in the field of wireless communications.

22. Throughout my declaration, even if I discuss my analysis in the present tense, I am always making my determinations based on what a POSITA would have known at the time of the invention.

B. Claim Construction Standard

23. I have been instructed by counsel on the law regarding claim construction and patent claims, and understand that a patent may include two types of claims—independent claims and dependent claims. An independent claim stands alone and includes only the features it recites. A dependent claim can depend from an independent claim or another dependent claim. I understand that a dependent claim includes all the features that it recites in addition to all the features recited in the claim from which it depends.

24. In an inter partes review proceeding such as this, I understand the claim of a patent shall be construed using the same claim construction standard that would be used to construe the claim in a civil action. I understand this includes

construing the claim in accordance with the ordinary and customary meaning of such claim as understood by one of ordinary skill in the art and the prosecution history pertaining to the patent. Any prior claim construction determination concerning a term of the claim in a civil action, or a proceeding before the International Trade Commission, that is timely made of record in the inter partes review proceeding will be considered by the PTAB. For completeness, I understand this standard is different from the prior "broadest reasonable interpretation" standard that was used in certain earlier inter partes review proceedings.

25. I understand an appropriate dictionary definition may provide evidence explaining the ordinary and customary meaning as would be understood by a person of ordinary skill in the art.

26. I understand that if there are specific statements in the specification that define the invention with respect to a term, those statements are strong evidence of a definition for the term.

C. Anticipation and Obviousness Law

27. In this declaration I have been instructed by counsel on the law regarding anticipation and obviousness. I understand that a claim is invalid and unpatentable if it is anticipated or obvious. My opinions here relate to both anticipation and obviousness as detailed below.

28. I understand that anticipation of a claim requires that every element of a claim is expressly or inherently disclosed in a single prior art reference. I understand that an anticipating reference need not use the exact terms of the claims, but must describe the patented subject matter with sufficient clarity and detail to establish that the claimed subject matter existed in the prior art and that such existence would be recognized by persons of ordinary skill in the field of the purported invention. I also understand that an anticipating reference must enable one of ordinary skill in the art to reduce the purported invention to practice without undue experimentation.

29. I understand that a patent claim is also invalid if the claims would have been obvious to a POSITA at the time of the invention. I understand that the obviousness inquiry should not be done in hindsight but rather from the perspective of a POSITA as of the time of the invention.

30. I understand that to obtain a patent, the claims must have been, as of the time of the invention, nonobvious in view of the prior art. I understand that an obviousness analysis involves comparing a claim to the prior art to determine whether the claimed invention would have been obvious to a POSITA at the time of the invention in view of the prior art and in light of the general knowledge in the art as a whole. I also understand that obviousness is ultimately a legal conclusion based on underlying facts of four general types, all of which must be considered:

(1) the scope and content of the prior art;

(2) the level of ordinary skill in the art;

(3) the differences between the claimed invention and the prior art; and

(4) any objective indicia of non-obviousness.

31. I understand that a claim is obvious when the differences between the subject matter sought to be patented and the prior art are such that the subject matter as a whole would have been obvious to a POSITA at the time of the invention.

32. I understand that certain objective indicia can be important evidence regarding whether a patent is obvious. Such indicia include: industry acceptance; commercial success of products covered by the patent claims; long-felt need for the invention; failed attempts by others to make the invention; copying of the invention by others in the field; unexpected results achieved by the invention as compared to the closest prior art; praise of the invention by the infringer or others in the field; taking of licenses under the patent by others; expressions of surprise by experts and those skilled in the art at making the invention; and the patentee proceeded contrary to the accepted wisdom of the prior art. I understand that such evidence must have a nexus, or causal relationship to the elements of the claim. I

am unaware of any such objective considerations having a nexus to the claims at issue in this proceeding.

33. I understand that obviousness can be established by combining multiple prior art references to meet each and every claim element, or by modifying a single prior art reference. I also understand that to support a combination of multiple prior art references or a modification of a single reference, there must be a rationale explaining why a skilled artisan would combine or modify the references in the manner claimed and how the proposed combination or modification meets each and every claim element. But I also understand that a proposed combination or modification of references can be susceptible to hindsight bias. When it appears hindsight bias is being used, I understand the modification or combination is not considered obvious.

34. I understand that exemplary rationales that may support a conclusion of obviousness include: combining or modifying prior art elements according to known methods to yield predictable results; simple substitutions of one known element for another to obtain predictable results; using a known technique to improve similar devices in the same way; applying a known technique to a known device ready for improvement to yield predicable results; choosing from a finite number of identified, predicable solutions, with a reasonable expectation of success; known work in one field of endeavor may prompt variations of it for use

in either the same field or a different one based on design incentives or other market forces if the variations are predicable to one of ordinary skill in the art; and some teaching, suggestion, or motivation in the prior art that would have led one of ordinary skill to modify the prior art reference or to combine prior art teachings to arrive at the claimed invention.

35. I understand that teaching away, e.g., discouragement from making the proposed modification, is strong evidence that the references are not combinable. I also understand that a disclosure of more than one alternative does not necessarily constitute a teaching away.

36. I understand that the combination does not need to result in the most desirable embodiment, but if the proposed combination does not have a reasonable expectation of success at the time of the invention, a POSITA would not have had an adequate teaching, suggestion, or motivation to combine the references.

37. I understand that the test for obviousness is not whether the features of a secondary reference may be bodily incorporated or physically combined into the structure of the primary reference, but whether the claimed invention is rendered obvious by the teachings of the references as a whole.

IV. Technology Background: Distributed Antenna Systems

38. Distributed antenna systems are typically used to extend or improve wireless communications coverage in areas that are difficult for signals from

traditional communications towers and antennas to reach. For example, signals from distant cell towers may not penetrate inside buildings or into tunnels or may not reach other blind spots blocked or covered by geographic features such as hills, buildings, or valleys. Distributed antenna systems are deployed inside these blind spots. Distributed antenna systems typically receive communication signals from a base station, transport those signals using cables to a collection of smaller antennas that have been distributed inside the building or targeted coverage area, and rebroadcast the wireless signals into the targeted area to wireless units such as mobile phones. The systems also transport communication signals in the opposite direction. That is, the collection of smaller antennas receives wireless communications from, for example, mobile phones within the targeted coverage area and transport those signals over cabling back to the base station. *See, e.g.*, EX-1010 (U.S. Patent Application Pub. No. 2009/0180426 A1) ("Sabat"). Sabat discloses:

> …Distributed Antenna Systems are used to provide wireless communications coverage where it is impractical to install a conventional base station. An example is in-building coverage where low cost radiating antennas are desired and base stations represent either too large or too expensive a solution. Distributed Antenna Systems allow a donor base station to be located outside the desired coverage area and its RF signals are distributed to multiple antennas using either electrical or optical means. A means to distribute the base station's signals to more than one antenna is termed simulcast. In the direction toward the wireless user, i.e., downlink/forward path, the signal is replicated for each remote location. On the return direction,

> i.e., uplink/reverse path, the signals from multiple remote locations are summed to create a single composite signal for the base station.

EX-1010 ¶0005.

39. Distributed antenna systems were known in the art and had been deployed for years prior to the filing of the '499 patent. In the two drawings below, I have illustrated the basic building blocks of a distributed antenna system employing distributed remote antennas to expand the reach of a wireless communications network. The first drawing illustrates the general concept. The second drawing illustrates how such a system may be deployed within a building.

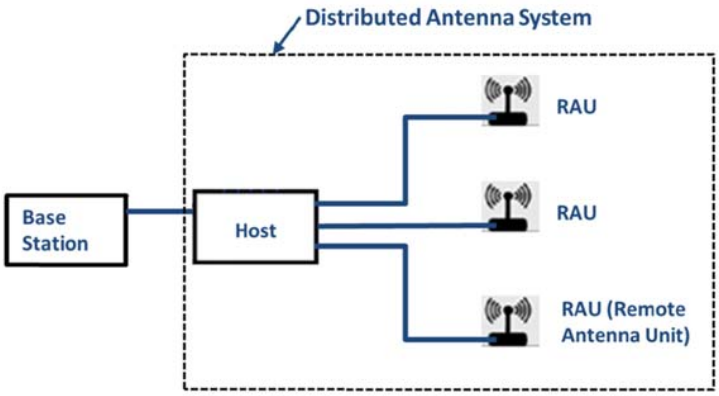

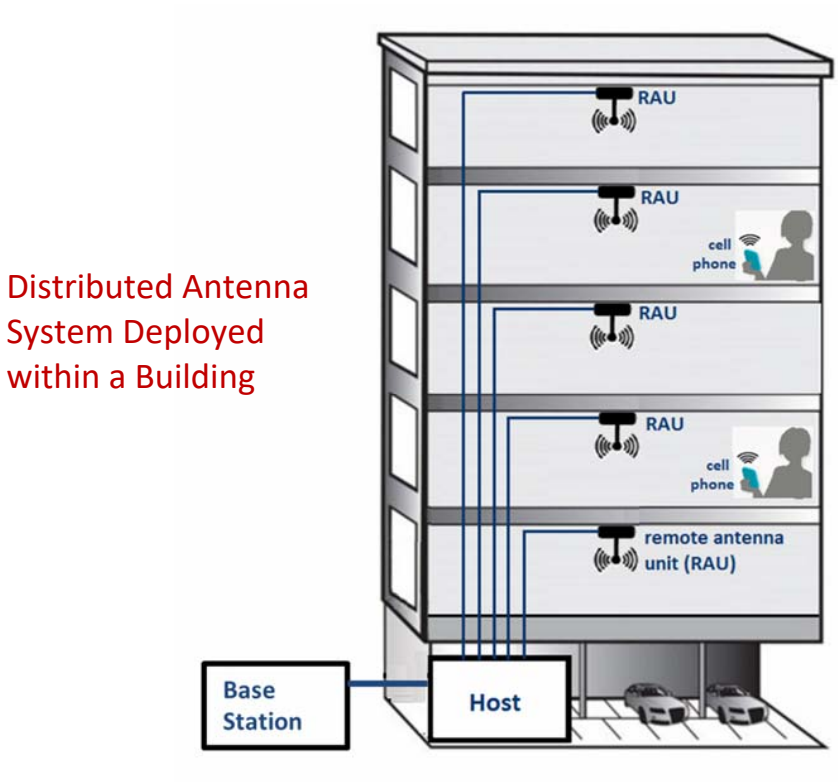

40. As indicated in the drawings, the main components of a distributed antenna system are the host or hub coupled by cabling to multiple remote antenna units that are remote from the host. The host, which is usually positioned in close proximity to the base station, receives signals from the base station, converts the signal to an appropriate form for distribution over cabling, and then transmits the resulting signals to the remote antenna units that are scattered in the desired coverage area. The remote units convert and condition the signal to an appropriate form for wireless transmission and then radiate the signals wirelessly using antennas to wireless devices such as cell phones in the coverage area. In the reverse direction, the remote units receive wireless signals transmitted by cell

phones in their coverage areas, convert these into an appropriate form for transmission over cabling back to the host which then, for example, delivers a composite signal to the base station as if all the incoming signals had been received by a single antenna.

41. There were multiple approaches known in the art for building a distributed antenna system. As explained, for example, in the Sabat prior art reference (EX-1010), both analog and digital DAS systems were known, and the communication link between the host units and the remote units could be either an analog interface or a digital interface. *See, e.g.*, EX-1010 Figs. 1-2; ¶¶0006-0008, ¶0013. The cabling could be copper cabling (for shorter distances) or optical fiber cable (for longer distances). It was also known that in a DAS using digital distribution between the host and remote units, the interface between the base station and the host unit could be either analog or digital. Typically, where the host receives analog radio frequency ("RF") signals from the base station, the host will include analog to digital converters to sample the RF signals to convert them to digital for transmission to the remote units which will then reconvert the signals from digital to analog before wireless transmission. Similar steps are taken for signals traveling in the reverse direction from the cell phones. *See, e.g.*, EX-1010 ¶0013 ("A digital distribution network, illustrated in FIG. 2, adds the extra steps of

Analog-to-Digital and Digital-to-Analog conversions at both ends of the DAS network.”).

V. Overview of the ‘499 Patent

A. The ‘499 Specification

42. The '499 patent is titled “Distributed Antenna System” and relates to a Distributed Antenna System (DAS) in which the amount of “radio resources” assigned to a remote unit can be changed over time. EX-1001 4:10-31. The preferred embodiment of the ‘499 patent uses the conventional DAS elements of a central host unit (which the specification calls a “digital access unit” or “DAU”) and remote units (which the specification calls “digital remote units” or “DRUs”).

43. The digital access unit (DAU) connects to associated base stations. *Id.* at 4:40-44. The DAU of the distributed antenna system receives radio frequency (RF) signals from a base station. *Id.* at 4:41-44, 4:63-5:1. The signals are distributed digitally over optical fibers to multiple digital remote units (DRUs). *Id.* at 4:41-44, 5:4-9. Figure 1 is a block diagram showing the basic structure and an example of a downlink (base station→DRU) transport scenario:

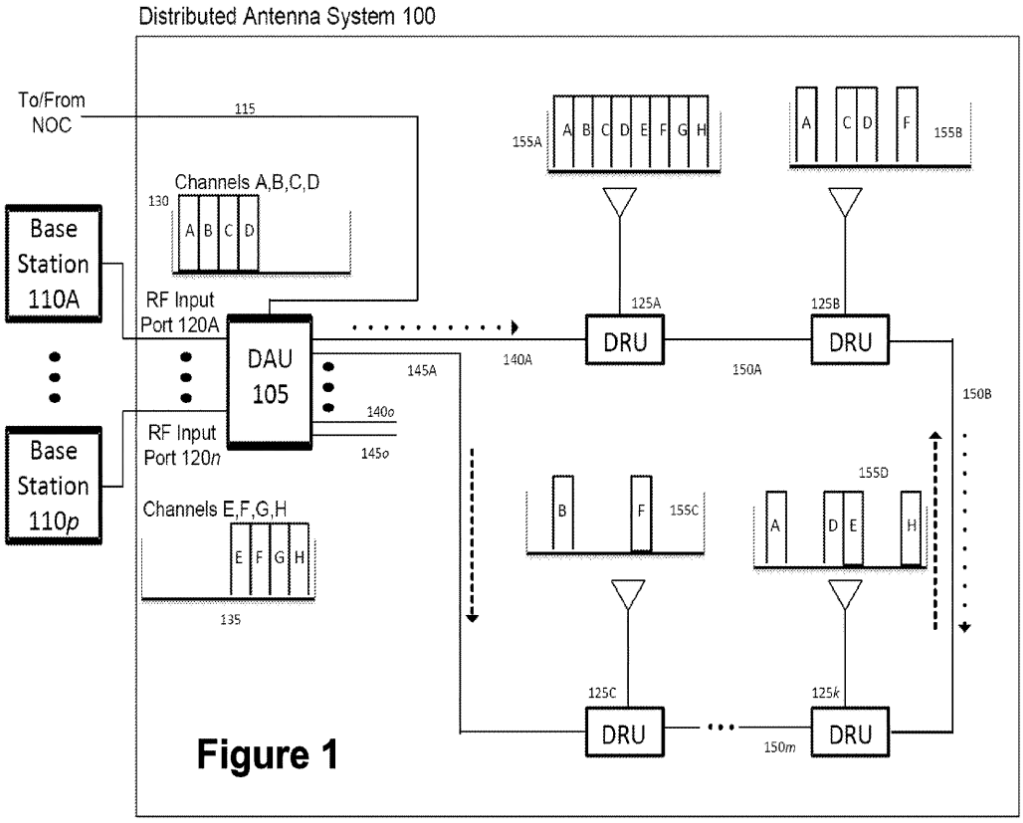

DAU 105 receives a downlink input signal, containing carriers A-D, from base station 110a. *Id.* at 5:62-66. DAU 105 receives a second downlink input signal, containing carriers E-H, from base station 110p. *Id.* at 5:66-6:2. The number of channels to be used at each DRU is assigned by the DAU and need not be equal, adjacent or sequential, but instead will typically be any configuration that optimizes network utilization. *Id.* at 5:28-31.

44. Generally, software settings within a DRU are configured either manually or automatically to determine which of the carriers received at the DRU are present in the downlink output signal at the antenna port of the DRU. *Id.* at

6:21-27. The DAU communicates with a software module in the DRU to enable or disable the transmission of specific radio resources by the DRU. *Id.* at 12:17-37.

B. The '499 Claims

45. The claims use different terminology than the specification. The claims recite: a "baseband unit" and "signal source." Neither appears in the specification. The "baseband unit" appears to refer to the digital access unit (DAU) in the specification and "signal source" to the base station in the specification.

46. There are 3 independent claims (1, 8, 14). They recite similar limitations but are written as a system (claim 1), component of a system (claim 8), and method (claim 14). The Claims Appendix lists the text of each of the claims and labels each element (1A, 1B, 1C, etc.).

47. Below is a chart comparing the independent claims. I included some underlining merely for context to aid in comparison.

Claim 1	Claim 8	Claim 14
1. A system for transporting wireless communications, comprising:	8. A baseband controller for use in the transport of wireless communications, comprising:	14. A method for providing digital signals in a Distributed Antenna System (DAS), comprising:
a baseband unit;		
a plurality of signal sources, including at least a first signal source and a second signal source;		
a plurality of remote units, including at least a first remote unit and a second remote unit;		
wherein the baseband unit comprises a plurality of interfaces to communicatively couple the baseband unit to the plurality of signal sources;	a plurality of interfaces to communicatively couple a baseband unit to a plurality of signal sources, including at least a first signal source and a second signal source;	
	at least one interface to communicatively couple the baseband unit to a plurality of remote units, including at least a first remote unit;	
wherein the baseband unit is configured to receive a plurality of radio resources from the first signal source and the second signal source;	wherein the baseband unit is configured to receive a plurality of radio resources from the first signal source and the second signal source;	receiving at a baseband unit, from a plurality of signal sources including at least a first signal source and a second

		signal source, a plurality of radio resources;
wherein the baseband unit is configured to send a digital representation of a first set of radio resources to the first remote unit at a first point in time, the first set of radio resources for transmission at an antenna of the first remote unit;	wherein the baseband unit is configured to send digital representations of a first set of radio resources to the first remote unit at a first point in time, the first set of radio resources for transmission at an antenna of the first remote unit;	transmitting from the baseband unit, at a first point in time, a digital representation of a first set of radio resources to a first remote unit, the first set of radio resources for transmission at an antenna of the first remote unit;
wherein the baseband unit is configured to send a digital representation of a second set of radio resources to the first remote unit at a second point in time, the second set of radio resources for transmission at the antenna of the first remote unit;	wherein the baseband unit is configured to send digital representations of a second set of radio resources to the first remote unit at a second point in time, the second set of radio resources for transmission at the antenna of the first remote unit; and	transmitting from the baseband unit, at a second point in time, a digital representation of a second set of radio resources to the first remote unit, the second set of radio resources for transmission at the antenna of the first remote unit;
wherein a number of radio resources in the first set of radio resources is different from a number of radio resources in the second set of radio resources; and	wherein a number of radio resources in the first set of radio resources is different from a number of radio resources in the second set of radio resources.	wherein a number of radio resources in the first set of radio resources is different from a number of radio resources in the second set of radio resources.

wherein the baseband unit is configured to receive digital signals from each of the plurality of remote units.		

48. Below is a chart showing the overlapping dependent claims.

Dependent claims from Claim 1	**Dependent claims from Claim 8**	**Dependent claims from Claim 14**
2. The system of claim 1 wherein the baseband unit is <u>configured to packetize</u> each digital representation of a radio resource.	9. The baseband controller of claim 8 wherein the baseband unit is <u>configured to packetize</u> each digital representation of a radio resource.	19. The method of claim 14 further comprising <u>packetizing</u>, at the baseband unit, at least a subset of the plurality of radio resources.
3. The system of claim 1 wherein the digital representation of the first set of radio resources <u>includes destination information identifying the first remote unit</u> and the digital representation of the second set of radio resources includes destination information identifying the first remote unit.	10. The baseband controller of claim 8 wherein the digital representation of the first set of radio resources <u>includes destination information identifying the first remote unit</u> and the digital representation of the second set of radio resources includes destination information identifying the first remote unit.	15. The method of claim 14 wherein the digital representation of the first set of radio resources <u>includes destination information identifying the first remote unit</u> and the digital representation of the second set of radio resources includes destination information identifying the second remote unit.
4. The system of claim 1 wherein the first set of radio resources is a subset of the plurality of radio resources and <u>includes at least some</u>	11. The baseband controller of claim 8 wherein the first set of radio resources is a subset of the plurality of radio resources and	16. The method of claim 14 wherein the first set of radio resources is a subset of the plurality of radio resources and <u>includes at least some</u>

radio resources from the first signal source and at least some radio resources from the second signal source.	includes at least some radio resources from the first signal source and at least some radio resources from the second signal source.	radio resources from the first signal source and at least some radio resources from the second signal source.
5. The system of claim 1 wherein the baseband unit and at least one of the plurality of signal sources are part of a baseband controller.		
6. The system of claim 1 wherein the baseband unit further comprises at least one interface to communicatively couple the baseband unit to one or more additional baseband units.	12. The baseband controller of claim 8 wherein the baseband unit further comprises at least one interface to communicatively couple the baseband unit to one or more additional baseband units.	17. The method of claim 14 further comprising receiving at the baseband unit, from at least one additional baseband unit, a second plurality of radio resources.
7. The system of claim 6 wherein the one or more additional baseband units includes a plurality of additional baseband units, and the baseband unit is connected to at least a first one of the plurality of additional baseband units through a direct connection and at least a second one of the plurality of additional baseband units through an indirect connection.		

	13. The baseband controller of claim 8 wherein the plurality of radio resources include a first composite signal from the first signal source and a second composite signal from the second signal source, and the baseband unit is configured to form the digital representation of the first set of radio resources from a first subset of the first composite signal and a second subset of the second composite signal.	18. The method of claim 14 wherein the plurality of radio resources include a first composite signal from the first signal source and a second composite signal from the second signal source, the method further comprising forming, at the baseband unit, the digital representation of the first set of radio resources from a first subset of the first composite signal and a second subset of the second composite signal.

49. The claims of the '499 patent overlap with and are similar to the claims of U.S. Patent the 10,080,178 patent (EX-1012), which the PTAB has already found to be invalid. *See* EX-1013 (IPR Institution); EX-1014 (Judgment).

50. Claim 1 is nearly identical to now-cancelled claim 10 of the '178 patent other than terminology changes (e.g., changing host unit to baseband unit). Both claims recite the same functionality about sending a "first" and "second" set of channels or radio resources at different times where the number of radio resources or channels is "different.":

‘499 patent (EX-1001)	‘178 patent (EX-1012)
1. A system for transporting wireless communications, comprising:	10. A system for transporting wireless communications, comprising:
a baseband unit;	a host unit;
a plurality of signal sources, including at least a first signal source and a second signal source;	
a plurality of remote units, including at least a first remote unit and a second remote unit;	a plurality of remote units, including at least a first remote unit and a second remote unit;
wherein the baseband unit comprises a plurality of interfaces to communicatively couple the baseband unit to the plurality of signal sources;	wherein the host unit comprises at least one interface to communicatively couple the host unit to at least one signal source;
wherein the baseband unit is configured to receive a plurality of radio resources from the first signal source and the second signal source;	wherein the host unit is configured to receive a plurality of downlink channel signals from the at least one signal source; wherein the host unit is configured to send digital representations of the plurality of downlink channel signals to the plurality of remote units;
wherein the baseband unit is configured to send a digital representation of a first set of radio resources to the first remote unit at a first point in time, the first set of radio resources for transmission at an antenna of the first remote unit;	wherein the host unit is configurable to send digital representations of a first set of downlink channel signals to the first remote unit at a first point in time, the first set of downlink channel signals for transmission at an antenna of the first remote unit;
wherein the baseband unit is configured to send a digital	wherein the host unit is configurable to send digital representations of a second

representation of a second set of radio resources to the first remote unit at a second point in time, the second set of radio resources for transmission at the antenna of the first remote unit;	set of downlink channel signals to the first remote unit at a second point in time, the second set of downlink channel signals for transmission at the antenna of the first remote unit;
wherein a number of radio resources in the first set of radio resources is different from a number of radio resources in the second set of radio resources; and	wherein a number of downlink channel signals in the first set of downlink channel signals is different from a number of downlink channel signals in the second set of downlink channel signals; and
wherein the baseband unit is configured to receive digital signals from each of the plurality of remote units.	wherein the host unit is configured to receive digital signals from each of the plurality of remote units.

51. As pointed out by the examiner of the '499 patent, Claim 1 of the '499 patent is not patentably distinct from canceled claim 10 of the '178 patent. Patent Owner made the following changes:

(i) replaced the term "host unit" with "baseband unit"

(ii) replaced the term "downlink channel signals" with "radio resources"

(iii) required interfacing with plural signal sources instead of one signal source.

52. As to (i), the '499 patent does not teach there is any patentable distinction between the baseband unit and previously recited host unit. Rather, both host unit and baseband unit appear to be different names for the same structure in the specification (digital access unit). Further, the claims recite the

same limitations for both (e.g., they receive signals and send the signals in "sets" to remote units).

53. As to (ii), the '499 patent specification does not teach this is a patentable distinction between "radio resources" and the previously recited "downlink channel signals." Rather, it teaches that the preferred embodiment of a radio resource *is* a downlink channel signal. EX-1001 at 4:27-39. Further, the claims recite the same limitations for both (they are received from the signal source and sent in subsets).

54. As (iii), the '499 patent specification does not teach this is a patentable distinction. Claim 10 of the '178 patent already recites "at least one signal source," which would include a "plurality of signal sources." EX-1012 at claim 10. Moreover, the '178 patent recites this same limitation in a now-cancelled dependent claim. Now-cancelled dependent claim 29 recited both a "plurality of signal sources" and "a plurality of interfaces to communicatively couple the host unit to a plurality of signal sources." EX-1012 at claim 29. Compare the plurality of signal source language in the two patent claims:

‘499 patent (EX-1001)	‘178 patent (EX-1012)
1. A system for transporting wireless communications, comprising… a plurality of signal sources, including at least a first signal source and a second signal source… wherein the baseband unit comprises a plurality of interfaces to communicatively couple the baseband unit to the plurality of signal sources…	29. The host unit of claim 26 wherein the at least one interface to communicatively couple the host unit to the at least one signal source includes a plurality of interfaces to communicatively couple the host unit to a plurality of signal sources.

In the ‘178 IPR, the PTAB found Wu discloses this limitation and entered adverse judgment against the claims with that concept. EX-1013 at 36-38; EX-1014 at 3.

55. The other two independent claims in the ‘499 patent equally overlap with now-cancelled claims of the ‘178 patent: ‘499 claims 8 and 14 correspond to ‘178 claims 1 and 15.

56. Here is chart comparing ‘499 claim 8 and ‘178 claim 1:

‘499 patent (EX-1001)	‘178 patent (EX-1012)
8. A baseband controller for use in the transport of wireless communications, comprising: a plurality of interfaces to communicatively couple a baseband unit to a plurality of signal sources, including at least a first signal source and a second signal source; at least one interface to communicatively couple the baseband unit to a plurality of remote units,	1. A host unit for use in the transport of wireless communications, comprising: at least one interface to communicatively couple the host unit to at least one signal source; at least one interface to communicatively couple the host unit to a plurality of remote units, including

including at least a first remote unit;	at least a first remote unit;
wherein the baseband unit is configured to receive a plurality of radio resources from the first signal source and the second signal source;	wherein the host unit is configured to receive a plurality of downlink channel signals from the at least one signal source; wherein the host unit is configured to send digital representations of the plurality of downlink channel signals to the plurality of remote units;
wherein the baseband unit is configured to send digital representations of a first set of radio resources to the first remote unit at a first point in time, the first set of radio resources for transmission at an antenna of the first remote unit;	wherein the host unit is configurable to send digital representations of a first set of downlink channel signals to the first remote unit at a first point in time, the first set of downlink channel signals for transmission at an antenna of the first remote unit;
wherein the baseband unit is configured to send digital representations of a second set of radio resources to the first remote unit at a second point in time, the second set of radio resources for transmission at the antenna of the first remote unit; and	wherein the host unit is configurable to send digital representations of a second set of downlink channel signals to the first remote unit at a second point in time, the second set of downlink channel signals for transmission at the antenna of the first remote unit; and
wherein a number of radio resources in the first set of radio resources is different from a number of radio resources in the second set of radio resources.	wherein a number of downlink channel signals in the first set of downlink channel signals is different from a number of downlink channel signals in the second set of downlink channel signals.

57. Here is chart comparing '499 claim 14 and '178 claim 15:

'499 patent (EX-1001)	'178 patent (EX-1012)
14. A method for providing digital signals in a Distributed Antenna System (DAS), comprising:	15. A method for providing digital signals in a Distributed Antenna System (DAS), comprising:
receiving at a baseband unit, from a plurality of signal sources including at least a first signal source and a second signal source, a plurality of radio resources;	
transmitting from the baseband unit, at a first point in time, a digital representation of a first set of radio resources to a first remote unit, the first set of radio resources for transmission at an antenna of the first remote unit;	transmitting from a host unit, at a first point in time, digital representations of a first set of downlink channel signals to a first remote unit, the first set of downlink channel signals for transmission at an antenna of the first remote unit;
transmitting from the baseband unit, at a second point in time, a digital representation of a second set of radio resources to the first remote unit, the second set of radio resources for transmission at the antenna of the first remote unit;	transmitting from the host unit, at a second point in time, digital representations of a second set of downlink channel signals to the first remote unit, the second set of downlink channel signals for transmission at the antenna of the first remote unit;
wherein a number of radio resources in the first set of radio resources is different from a number of radio resources in the second set of radio resources.	wherein a number of downlink channel signals in the first set of downlink channel signals is different from a number of downlink channel signals in the second set of downlink channel signals.

58. The '499 dependent claims also overlap with now-cancelled claims of the '178 patent. The '499 dependent claims primarily (a) repeat limitations from now-cancelled dependent claims of the '178 or (b) moved limitations from the now-cancelled independent claims of the '178 patent into the '499 dependent claims and changed the terminology. Here are charts showing the overlap:

'499 patent claims 2, 9, and 19

'499 patent (EX-1001)	'178 patent (EX-1012)
2. The system of claim 1 wherein the baseband unit is configured to packetize each digital representation of a radio resource.	11. The system of claim 10, wherein the host unit is configured to packetize each digital representation of a downlink channel signal.
9. The baseband controller of claim 8 wherein the baseband unit is configured to packetize each digital representation of a radio resource.	8. The host unit of claim 1, wherein the host unit is configured to packetize each digital representation of a downlink channel signal.
19. The method of claim 14 further comprising packetizing, at the baseband unit, at least a subset of the plurality of radio resources.	19. The method of claim 15, wherein the downlink channel signals are packetized.

‘499 patent claims 3, 10, 15

‘499 patent (EX-1001)	‘178 patent (EX-1012)
3. The system of claim 1 wherein the digital representation of the first set of radio resources includes destination information identifying the first remote unit and the digital representation of the second set of radio resources includes destination information identifying the first remote unit. 10. The baseband controller of claim 8 wherein the digital representation of the first set of radio resources includes destination information identifying the first remote unit and the digital representation of the second set of radio resources includes destination information identifying the first remote unit. 15. The method of claim 14 wherein the digital representation of the first set of radio resources includes destination information identifying the first remote unit and the digital representation of the second set of radio resources includes destination information identifying the second remote unit.	21. A host unit for use in the transport of wireless communications, comprising: [..] wherein the digital representation of the first portion includes destination information identifying the first remote unit and the digital representation of the second portion includes destination information identifying the second remote unit, the first portion being different than the second portion [..] 23. The host unit of claim 21 wherein the destination information identifying the first remote unit is provided in a header of the digital representation of the first portion, and the destination information identifying the second remote unit is provided in a header of the digital representation of the second portion. 30. The host unit of claim 26 wherein the digital representation of the first portion includes destination information identifying the first remote unit and the digital representation of the second portion includes destination information identifying the second remote unit.

‘499 patent claims 6, 12, and 17

‘499 patent (EX-1001)	‘178 patent (EX-1012)
6. The system of claim 1 wherein the baseband unit further comprises at least one interface to communicatively couple the baseband unit to one or more additional baseband units. 12. The baseband controller of claim 8 wherein the baseband unit further comprises at least one interface to communicatively couple the baseband unit to one or more additional baseband units. 17. The method of claim 14 further comprising receiving at the baseband unit, from at least one additional baseband unit, a second plurality of radio resources.	26. A host unit for use in the transport of wireless communications, comprising: […] at least one interface to communicatively couple the host unit to one or more additional host units; wherein the host unit is configured to send a digital representation of any carrier of any downlink signal it receives to the one or more additional host units; […] 28. The host unit of claim 26 wherein the one or more additional host units includes a plurality of additional host units, and the host unit is connected to at least one of the plurality of additional host units through a direct connection and at least one of the plurality of additional host units through an indirect connection.

‘499 patent claim 7

‘499 patent (EX-1001)	‘178 patent (EX-1012)
7. The system of claim 6 wherein the one or more additional baseband units includes a plurality of additional baseband units, and the baseband unit is connected to at least a first one of the plurality of additional baseband units through a direct connection and at least a second one of the plurality of additional baseband units through an indirect connection.	28. The host unit of claim 26 wherein the one or more additional host units includes a plurality of additional host units, and the host unit is connected to at least one of the plurality of additional host units through a direct connection and at least one of the plurality of additional host units through an indirect connection.

‘499 patent claim 13 and 18

‘499 patent (EX-1001)	‘178 patent (EX-1012)
13. The baseband controller of claim 8 wherein the plurality of radio resources include a first composite signal from the first signal source and a second composite signal from the second signal source, and the baseband unit is configured to form the digital representation of the first set of radio resources from a first subset of the first composite signal and a second subset of the second composite signal. 18. The method of claim 14 wherein the plurality of radio resources include a first composite signal from the first signal source and a second composite signal from the second signal source, the method further comprising forming, at the baseband unit, the digital representation of the first set of radio resources from a first subset of the first composite signal and a second subset of the second composite signal.	21. A host unit for use in the transport of wireless communications, comprising: […] wherein the host unit is configured to receive a plurality of downlink signals from the at least one signal source, each downlink signal of the plurality of downlink signals comprising a plurality of carriers; 26. A host unit for use in the transport of wireless communications, comprising: […] wherein the host unit is configured to receive a plurality of downlink signals from the at least one signal source, each downlink signal of the plurality of downlink signals comprising a plurality of carriers

59. Here are summary charts for the overlap of the claims:

Independent claims	
‘499 patent	**‘178 patent**
1	10
8	1
14	15

Dependent claims	
'499 Patent	**'178 Patent**
2, 9, 19	8, 11, 19, 22
3, 10, 15	21, 23, 30
6, 12, 17	26, 28
7	28
13, 18	21, 26

C. The '499 Prosecution History

60. Before the first office action, Patent Owner cancelled the original claims and filed new claims 10-29. EX-1002 at A97-104. These new claims switched to the terminology (e.g., "baseband unit" or "baseband controller" instead of a host unit) not recited in the original claims or specification.

61. In the first office action, the examiner rejected all the independent claims based on double patenting. EX-1002 at A121-A126. The examiner explained that application claim 10 was simply using "different wordings" to claim "similar elements" to claim 10 of Patent Owner's related '178 patent. *Id*. at A125. The examiner identified, for example, that Patent Owner changed the initial claim element from "a host unit" ('178 patent) to "baseband unit" (instant patent), but then preceded to recite the similar claim elements. *Id.* The examiner explained that the "same rationale" applied to other claims. *Id.* Patent Owner then terminally disclaimed the '499 patent to the '178 patent to "overcome the rejections." Id. *Id.* at A176, A163-164.

Based on the terminal disclaimer, the examiner allowed the claims. EX-1002 at A198-A199. The Notice of Allowance identified two references (Sulzberger and Boldi). *Id.* With no discussion of any other references, the examiner extrapolated that none of the art taught the following elements about a "first" and "second" set of radio resources where the "number" of radio resources in the sets is "different":

> However, in consideration of the claim amendments/remarks and the terminal disclaimer filed April 17, 2019, and further search, no prior art reference or a combination of prior art references disclose or suggest the combination of limitations specified in the independent claims including:
>
> "wherein the baseband unit is configured to send a digital representation of a second set of radio resources to the first remote unit at a second point in time, the second set of radio resources for transmission at the antenna of the first remote unit;" and "wherein a number of radio resources in the first set of radio resources is different from a number of radio resources in the second set of radio resources," in claim 10.

Id.

VI. Summary of the Asserted Prior Art

A. Primary References

1. "Wu": U.S. Patent Application Pub. No. 2010/0128676

62. Wu (EX-1005) was filed Nov. 11, 2009. Wu describes carrier transport systems for use by wireless operators to transport signals from base stations into wireless coverage areas. EX-1005 ¶¶0003-0004. Wu notes that wireless service providers utilize various bands of frequencies. *Id.* ¶0003. Each service provider uses one or more carrier channels within their frequency bands to carry voice or other data. *Id.*

63. Wu discloses that known systems utilize a terminal that digitizes entire frequency bands from base stations and that then transmit the digitized signals over fiber links to remote transceiver units (RTUs) in a coverage area. *Id.* ¶¶0004-05. Wu explains that such systems lack "fine grained control" over carrier channels and lack the ability to allocate carrier channels from one cell region to another in response to various events or conditions. *Id.*

64. Wu, therefore, discloses an improved system that allows fine-grained control over carrier channels from a single band or multiple bands by splitting carrier channels from their bands and routing channels "individually, collectively as shown, or in arbitrary groups" to RTUs as desired using a matrix switch according to a routing policy, where the routing policy can be updated or

reconfigured as desired. *Id.* ¶0049; *see also id.* ¶¶0009, 0011; 0038-39, 0047. Wu discloses that "more channels" can be allocated when needed to increase the bandwidth available in a particular region. *Id.* ¶0046; ¶¶0039-45.

65. Figure 1 of Wu shows its carrier transport system:

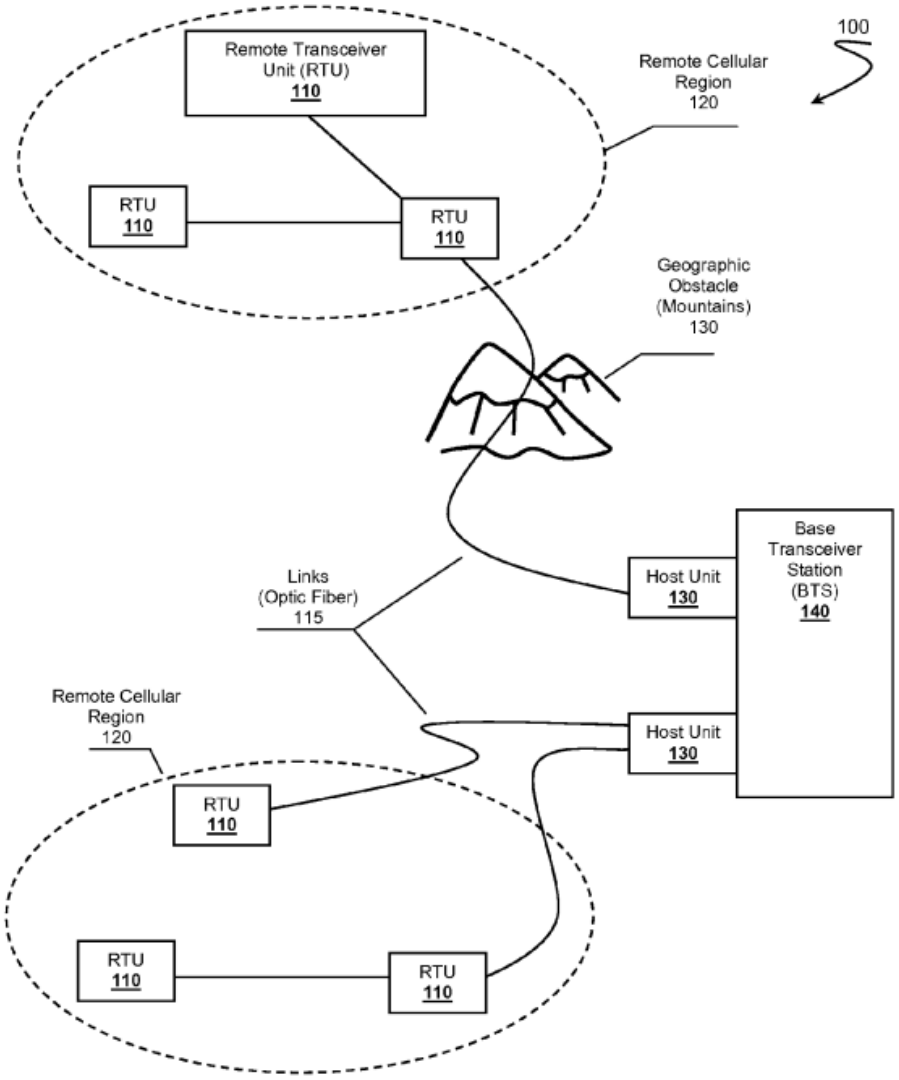

Figure 1

EX-1005 Fig. 1.

66. Figure 2 of Wu, shows the matrix switch 250 that, in combination with units 230, can route different groups of channels to different remote transceiver units 410. *Id.* ¶¶0038-40.

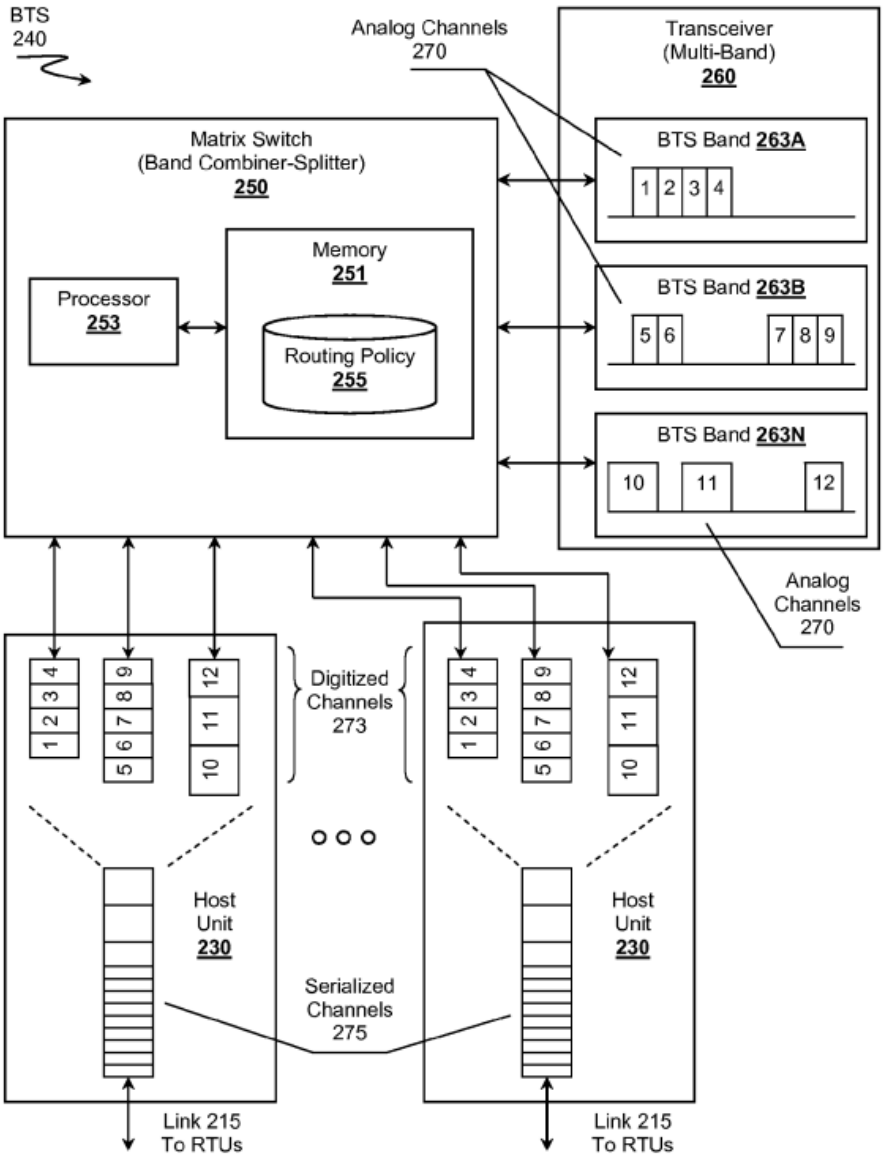

Figure 2

EX-1005 Fig. 2. Figure 4 shows the units 430 can be co-located within a single unit and can be coupled to RTUs in "cascade" (i.e. daisy-chain) configurations, simulcast configurations, or unicast configuration.

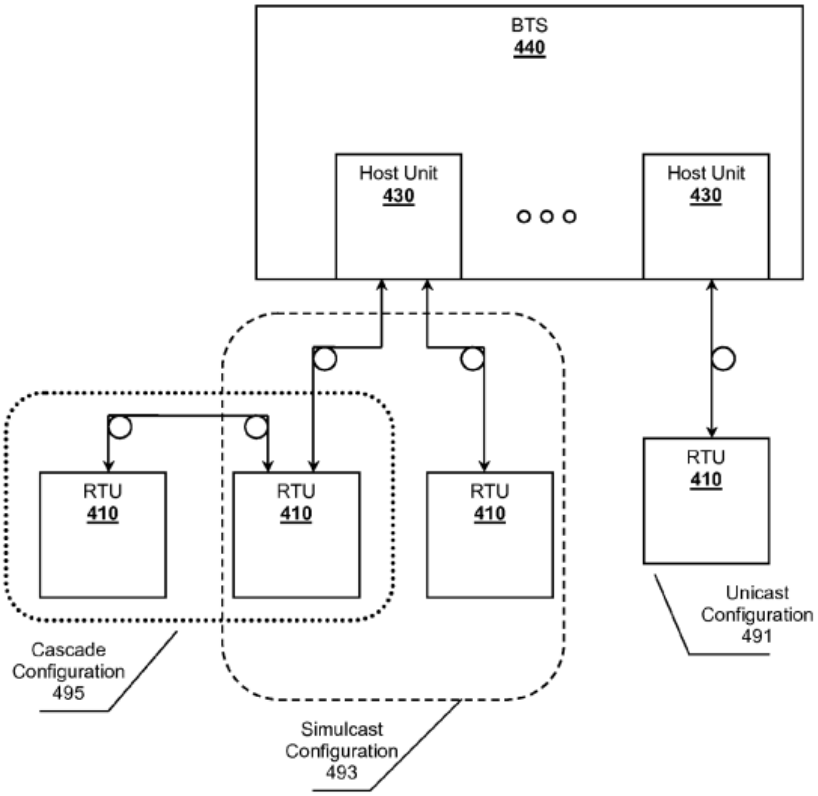

Figure 4

EX-1005 at Fig. 4.

2. "Hettstedt": U.S. Patent Pub. No. 2008/0119198

58. "Hettstedt" (EX-1006) published May 22, 2008. Hettstedt discloses a "method and a system for wireless cellular indoor communications with improved cell and load balancing management." EX-1006 ¶0008.

67. Hettstedt achieves this by adding a "cell management unit" (CMU) that can de-activate, shift, and activate carriers within the system of distributed radio heads (thus changing the number of carriers at the various radio heads). *Id.* ¶0029, ¶¶0043-0044. Figure 3 shows the CMU and other components:

Figure 3

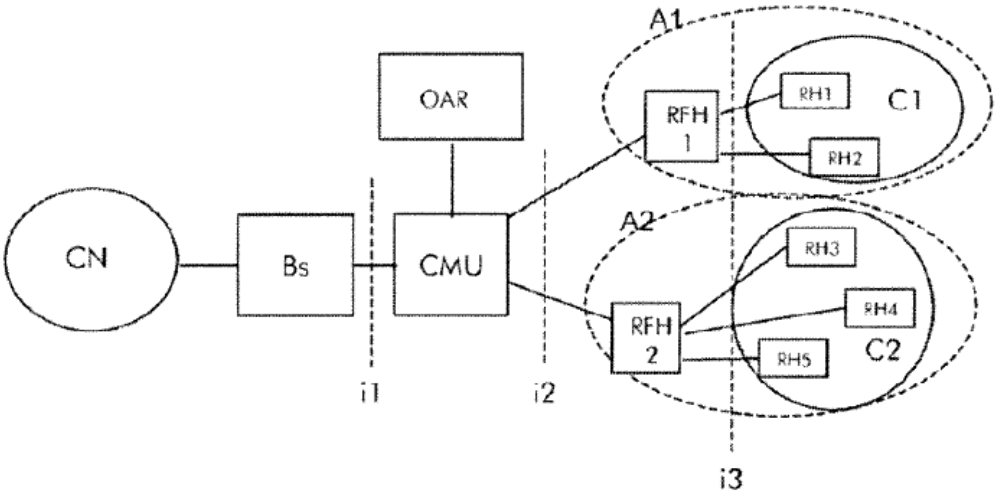

EX-1005 Fig. 3. "Bs" is the base station; "RH1-RH5" are radio heads. *Id.* ¶0039. Circles A1-A2 are "indoor location area[s]" (e.g., buildings) where the radio heads are distributed. *Id.* ¶0051; ¶0002. i1-i3 are digital interfaces. *Id.* ¶0040.

68. The CMU distributes a set of carriers to each radio head. Figure 5 shows an example:

Figure 5

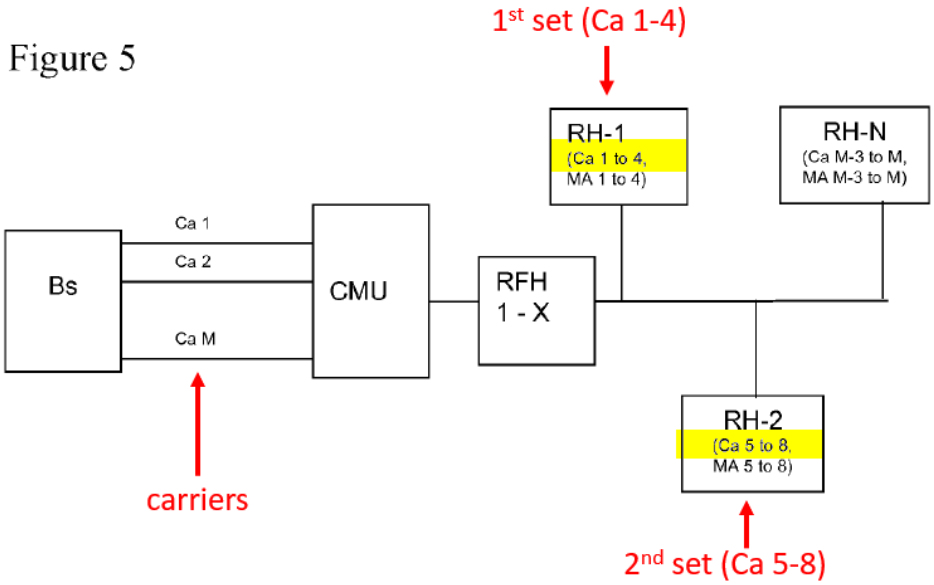

Id. The CMU uses addressing to distribute the carriers. *Id.* ¶0028. Figure 5 shows the CMU distributing (a) carriers 1-4 to RH-1 using MAC addresses 1-4 ("MA 1 to 4") and (b) carriers 5-8 are distributed to RH-2 using MAC addresses 5-8. EX-1005 ¶0053.

69. The CMU changes the sets of carriers during load balancing. *Id.* ¶0042, ¶0044. The CMU does this "through the shifting of un-used carriers from radio heads inside areas of low traffic load to radio heads inside areas of high traffic load." *Id.* ¶0044. The CMU de-activates the un-used carriers at the radio heads with low load (thus reducing the number of carriers in their sets) and activates the shifted carriers at the radio head with high load (thus increasing the

number of carriers in their sets). *Id.* ¶0044, ¶0029. Thus, "capacity can follow moving users in complex buildings, such as airports, stations, etc., with dynamic distribution of hot-spots." EX-1005 ¶0029.

70. The CMU works with any "number of base stations." *Id.* ¶0027. Figure 6, for example, shows eight base stations (BS1-BS8):

Figure 6

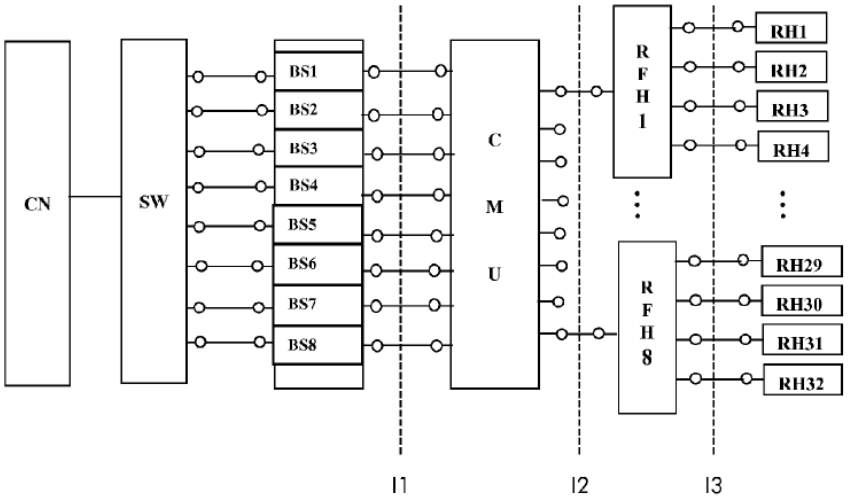

Id. Fig. 6; ¶0054. Each base station provides carriers to the CMU for distribution. *Id.* ¶0054.

B. Secondary References

1. "Sabat '426": U.S. Patent App. Pub. No. 2009/0180426A1

71. The Sabat '426 reference (EX-1010) published on July 16, 2009. Sabat '426 disclosed a distributed antenna system in which the hub included both a

matrix switch and digital (CPRI) interface to remote units. EX-1010 Figs. 3-6, ¶¶0046-0050, ¶0032, ¶¶0036-0038. Sabat '426 taught that this was particularly appropriate when the distributed antenna system is coupled to a digital base station. EX-1010 ¶0014.

2. Sabat '552: U.S. Patent No. 6,963,552

72. Sabat '552 (EX-1011) published November 8, 2005. Sabat '552 discloses a DAS in which the central hub is coupled to multiple other hubs so that base stations (signal sources) coupled at one hub can have their signals communicated to and through remote units that are coupled to any of the other hubs. EX-1011 Fig. 1, 6:55-59.

3. OBSAI: Reference Point 3 Specification Version 3.1

73. The Wu reference teaches to use one of either the OBSAI or the CPRI standard protocols for communicating over the optical links to its RTUs. *See, e.g.*, EX-1005 ¶0031 ("In a preferred embodiment, the communication links 115 between BTS 140 and remote units 110 employ one or more standards to exchange digitized signals. Suitable standards include those based on …the Open Base Station Architecture Initiative (OBSAI; http://www.obsai.org)"). The Open Base Station Architecture Initiative (OBSAI) was an initiative organized in 2002 by a collection of base station manufacturing companies to create and publish open standards defining interfaces to be used within base station equipment to allow

equipment from different manufacturers to interface with each other and drive down costs. *See, e.g.*, EX-1009 at 16. A series of specification documents were published defining the OBSAI protocols that were agreed upon by the OBSAI members. For example, Exhibit 1008 (OBSAI "Reference Point 3 Specification Version 3.1") and Exhibit 1009 (OBSAI "BTS System Reference Document Version 2.0") were published by the OBSAI group as a result of these efforts.

74. As explained in the declaration by Dr. Peter Kenington (Ex. 1018), these two OBSAI specification documents (Ex. 1008 and 1009) were published and made available to the public at least by December of 2006. EX-1018 at ¶¶3-13; *see also* EX-1008 at 12 (released November 13, 2006); *see also* EX-1009 13-14 (released April 27, 2006).

75. The OBSAI organization published a series of specifications that described an open, standardized protocol for communicating between components in a wireless communication system. The RP3 interface specification (EX-1008) specifically defined a protocol for communicating digital baseband representations of base station signals between a baseband module and a remote radio module. EX-1008. "Reference Point 3" or "RP3" is the name given by OBSAI to the interface between the baseband module and the RF module. EX-1008 at 14:2-3. Exhibit 1009 is a related publication by OBSAI that provides context for where the RP3 interface (defined in EX-1008) is found within a reference system

architecture. It includes illustrations and descriptions showing where the RP3 interface is located relative to other reference point interfaces (RP1, RP2) and functional blocks defined by the OBSAI standard publications. EX-1009 17 (Fig. 3.2-1); EX-1018 ¶5.

76. As shown in Figure 3.2-1 of EX-1009 (reproduced below), the OBSAI technical specifications (such as EX-1008) were described for use within in the context of a reference system architecture that defined a series of functional blocks (transport block, baseband block, RF block, Remote RF block…) as well as the communication interfaces between the blocks which were labeled "Reference Points (RP1, RP2, RP3, RP3-01….).

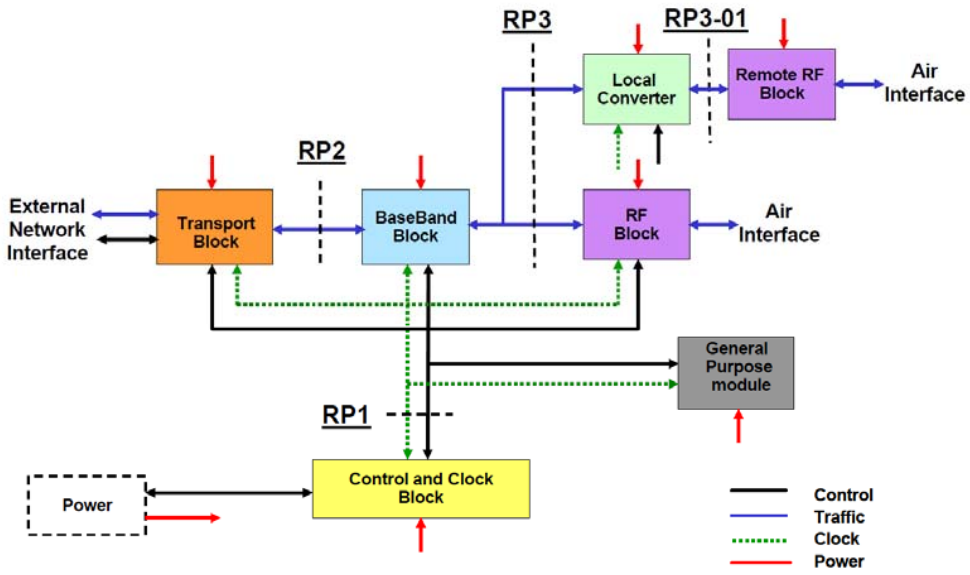

Figure 3.2-1 BTS Reference Architecture

EX-1009 17.

77. The Baseband Block consists of one or more modules that perform baseband processing for the desired air interfaces. EX-1009 25-26.

78. The RF block includes one or more RF modules that perform D/A & A/D conversion, up/down conversion, carrier selection and other functions as listed in EX-1009 43-44.

79. The RTUs in Wu correspond to the RF blocks in the OBSAI standard. The protocol for communicating with the RF blocks in the OBSAI standard is labeled the "RP3" interface. One special case of the RP3 interface is the RP3-01 protocol which is used when the RF block is located remote from the Baseband block. EX-1008 77. Therefore, by suggesting the use of the OBSAI protocol as an option for the communication interface between the remote RTUs and units 230, one of skill in the art would have understood Wu was referring to the RP3 and specifically the RP3-01 interface in the OBSAI standard.

80. The OBSAI standard for the RP3 interface relies on a defined data structure called a "message." The message is always 19 bytes in length, and its first 13 bits always contain the node and sub-node address used for routing the message. *See* EX-1008 42. The Message structure is shown below in Figure 25 taken from page 42 of the RP3 OBSAI standard (EX-1008):

The address field is divided into two sub-addresses, the node address and the sub-node address as illustrated in Figure 25.

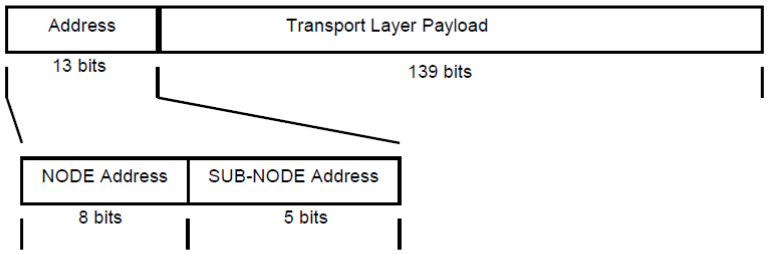

Figure 25: Address sub-fields.

81. In addition, to support Ethernet data between the Baseband block and the RRUs, the OBSAI standard communication protocol includes assignment of MAC addresses to each RRU so that 802.3 Ethernet messages (MAC frames) can be carried over the RP3 interface (MAC frame being sliced into portions that fit into RP3 messages). EX-1008 84-86 ("Ethernet MAC frames are mapped into RP3 messages and transferred over the RP3-01 protocol. …A MAC frame consists of …the addresses of the frame's source and destination… Each MAC frame is sliced into consecutive RP3 messages…"); EX-1009 53-57 ("MAC address assignments"). The MAC addresses are used to address a specific RRU when more than one RRU is coupled to the Baseband block.

82. Exhibit 1008 is the document of the OBSAI standards that defines Reference Point 3 (and RP3-01) protocols. As shown above in Figure 3.2-1, Reference Point 3 (and RP3-01) define the protocols for interfacing with the RF blocks. EX-1009 17.

83. Figure 49 of Ex. 1008 shows an example architecture for a BTS having a BaseBand Block that communicates with multiple remote RF units (RRUs) in chain, ring and tree-and-branch topologies, using the RP3-01 protocol.

6.1 Architecture

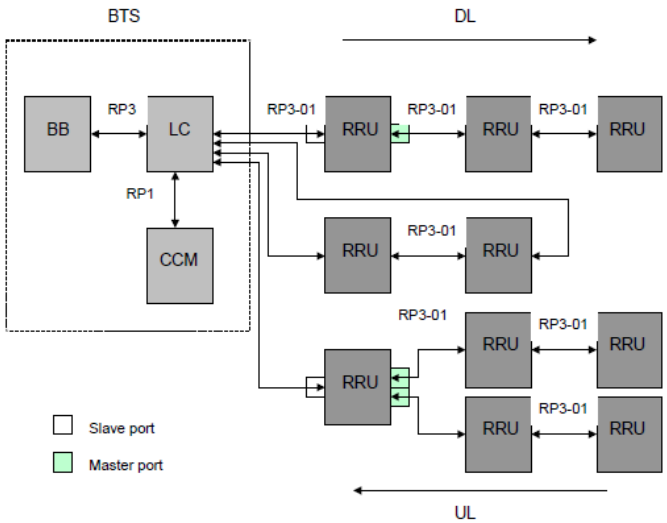

Figure 49: RP3-01 example architecture. Base station with remote RF units (RRUs). RRUs in chain, ring, and tree-and-branch topologies. Examples of RP3-01 master and slave ports of RRUs are also shown.

EX-1008 77 (Figure 49).

84. Page 24 of Ex. 1008 (excerpt shown below) describes the protocol stack of the OBSAI RP3 (and RP3-01) interface:

4 Protocol Stack

The RP3 bus interface is a high-capacity, point-to-point serial interface bus for uplink and downlink telecom (user) data transfer and related control. The physical implementation of the bus is based on differential signalling technology. The protocol stack is based on a packet concept using a layered protocol with fixed length messages.

The bus protocol can be considered as a four-layer protocol consisting of

- **Application layer**, providing the mapping of different types of packets to the payload.
- **Transport layer**, responsible for the end-to-end delivery of the messages, which is simply routing of messages.
- **Data link layer,** responsible for framing of messages and message (link) synchronization
- **Physical layer**, responsible for coding, serialization, and transmission of data

This is illustrated below in Figure 9.

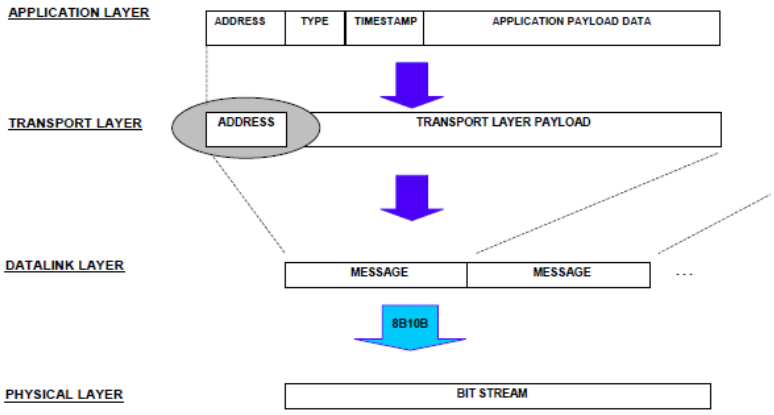

Figure 9: Layered structure of the bus protocol.

As expressly stated here in the OBSAI standard, the RP3 interface protocol stack "is based on a packet concept" in which the application layer creates different types of packets each of which includes an address in the header. EX-1008 24; *see also* Figure 9. Each packet is called a message. Multiple messages are serialized for transport over the physical layer.

85. Page 26 of the RP3 specification (EX-1008, p. 26)(shown below) shows in more detail the message (packet) format which includes a header having

an Address field, a Type field, and time-stamp field, and a payload field. This message format is used to communicate over the RP3 and RP3-01 interface.

4.2.1 Message Overview

A fixed message format is used for all data that is transferred over the RP3 or RP3-01 (see Section 6) bus. Figure 11 shows the message structure including partitioning of the message into bytes. Each byte of a message is first 8b10b encoded as shown in the figure and then transmitted to a link. 8b10b encoding is part of Physical layer functionality. The leftmost byte of the address field is first transmitted to the link while the rightmost byte of payload is last sent to the link. If data from other busses is transferred over the RP3 or RP3-01, it must be realigned such that MSB is transmitted first as defined in Figure 11.

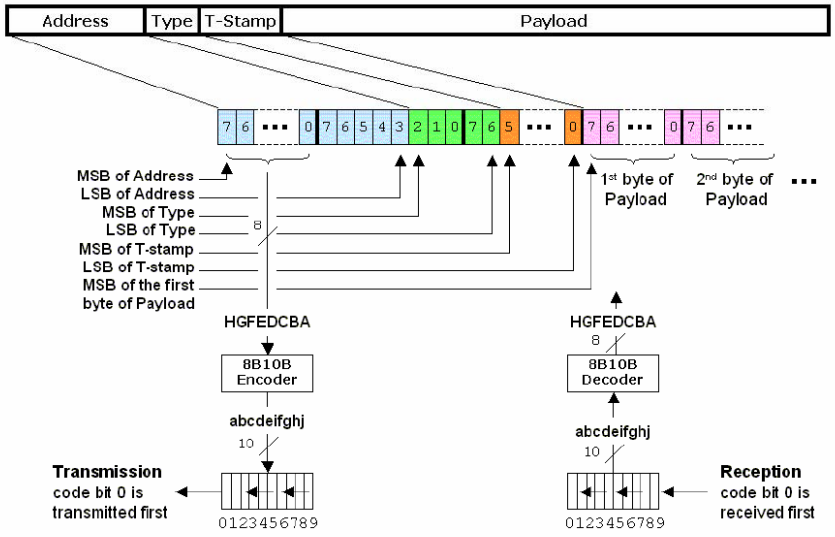

Figure 11: Message format of RP3 protocol stack.

86. "The address field is used to route the data to its destination point." EX-1008 39:12-15:

The address field, which is used to route the data to its destination point, occupies the first 13 bits of the message. The remaining part of the message, including type, timestamp, and payload, is passed transparently by the Transport Layer.

87. "The address controls the routing of each message" and can specify not only individual nodes but also individual sub-nodes within a node. EX-1008

42 ("4.3.2 Message Format – Address Field"). Therefore, the address field uniquely identifies not only a corresponding RRU, but the sub-node portion of the address can identify a particular module within any given RRU.

88. The messages defined by the RP3 protocol include payload data as complex baseband (I&Q) carrier sample data to remote the RRUs. *See, e.g.*, EX-1008 55 ("The WCDMA downlink data stream has a chip rate of 3.84 Mcps with **an I&Q data** format each of 16 bits giving 4 bytes per chip. This allows 4 consecutive chips of a single WCDMA signal (antenna-carrier) to be mapped into the payload…"); *see also* 59-60 ("[For 802.16,] **each I&Q sample** consists of four bytes which allows four consecutive **I&Q samples** of a single 802.16 signal (antenna-carrier) to be mapped into the payload…")(emphasis added). Again, as noted above, each message includes a header and payload fields. The header of each packet includes address information as shown on Figure 9 and 11 above that identifies the destination node for the message. The payload field will include digital samples of an antenna-carrier signal in baseband (I&Q) format.

89. The RP3-01 protocol is an extension of the RP3 interface that is designed for data transfer between a BTS and one or more remote RF blocks or "RRUs". The RP3-01 protocol combines the RP3 protocol with a physical layer suitable for long distances. *See* EX-1008 79:

8 **6.2.2 RP3-01 - Transfer of RP1 Data Over RP3**

9 RP3-01 is an extension of the RP3 protocol specifically designed for
10 data transfer between a BTS and one or more remote RF units. RP3-01
11 is equivalent to the RP3 protocol except for the fact that different
12 physical layer technologies, suitable for supporting data transmission
13 over long distances, are applied. In order to minimize the number of
14 connections to RRUs, RP1 data is mapped into RP3 messages. RP1
15 data includes Ethernet and frame clock bursts.

90. The RP3-01 protocol uses the same RP3 messages of the RP3 protocol, but also defines protocols for transmitting additional RP1 control information (such as frame clock bursts and Ethernet) over the RP3 link using the RP3 message format. *Id*.

91. In addition, the RP3-01 protocol communicates MAC frames conforming to the Ethernet protocol specified by 802.3-2002, where the MAC frames are carried by RP3 messages between RP3-01 nodes. For chain, ring or tree-and-branch topologies, an Ethernet switch within each RRU decides whether the MAC frame is consumed in that RRU or whether it will be forwarded to the next node. *See, e.g.*, EX-1008, p. 84 (shown below):

6.2.4 Ethernet Transmission

Between any two RP3-01 nodes, whether in a BTS or an remote RF unit, a point-to-point Ethernet transfer is applied, as shown in Figure 55. Thus, only a single logical connection is allocated for Ethernet MAC messages between RP3-01 nodes. Where chain, ring, or tree-and-branch topologies are used for a number of remote RF units, the Ethernet switch in each RRU shall decide whether the MAC frame is consumed in that RRU or whether it will be forwarded to the next node.

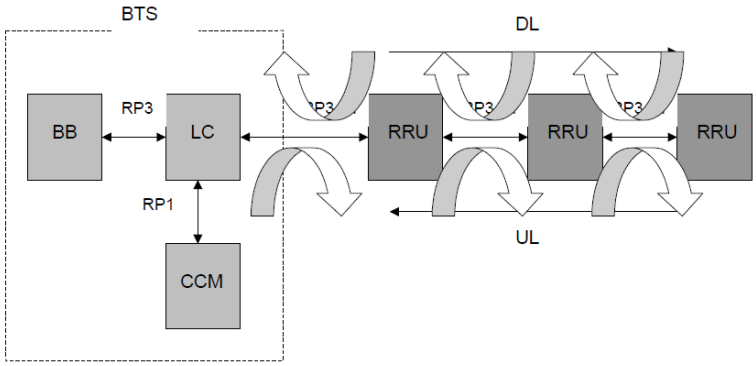

Figure 55: Ethernet frame transfer over RP3-01 network is done as a point-to-point transfer between a pair of nodes.

 Copyright 2006, OBSAI. All Rights Reserved.

92. Each MAC frame includes the address of the frame's source and destination in addition to the payload data and other fields. *See, e.g.*, EX-1008 85 (reproduced below). Each MAC frame is sliced into consecutive RP3 messages. That is, because a MAC frame requires more bits to transmit than a single RP3 message can carry, the MAC frame is divided up and carried over multiple RP3 messages being transported to the RRUs.

Ethernet MAC frames are mapped into RP3 messages and transferred over the RP3-01 protocol. At the input, there exist MAC frames as specified by 802.3-2002 [10]. A MAC frame consists of preamble, start frame delimiter, the addresses of the frame's source and destination, a length or type field, MAC client data, a field that contains padding if required, a frame check sequence, and an extension field, if required. Each MAC frame is sliced into consecutive RP3 messages and the time stamp field defines the beginning and end of each MAC frame, as indicated in Table 23.

93. As indicated in the paragraph quoted above, the MAC frame structure used for communication within the RP3-01 protocol is taken directly from well-known standard 802.3-2002, published March of 2002. The 802.3-2002 standard defines a MAC frame to include both a destination and a source address. The following is page 39 from 802.3-2002 standard showing the MAC frame structure includes both a source and a destination address:

3. Media access control frame structure

3.1 Overview

This clause defines in detail the frame structure for data communication systems using the CSMA/CD MAC. It defines the syntax and semantics of the various components of the MAC frame.

Two frame formats are specified in this clause:

a) A basic MAC frame format, and
b) An extension of the basic MAC frame format for Tagged MAC frames, i.e., frames that carry QTag Prefixes.

3.1.1 MAC frame format

Figure 3–1 shows the nine fields of a frame: the preamble, Start Frame Delimiter (SFD), the addresses of the frame's source and destination, a length or type field to indicate the length or protocol type of the following field that contains the MAC Client data, a field that contains padding if required, the frame check sequence field containing a cyclic redundancy check value to detect errors in a received frame, and an extension field if required (for 1000 Mb/s half duplex operation only). Of these nine fields, all are of fixed size except for the data, pad, and extension fields, which may contain an integer number of octets between the minimum and maximum values that are determined by the specific implementation of the CSMA/CD MAC. See 4.4 for particular implementations.

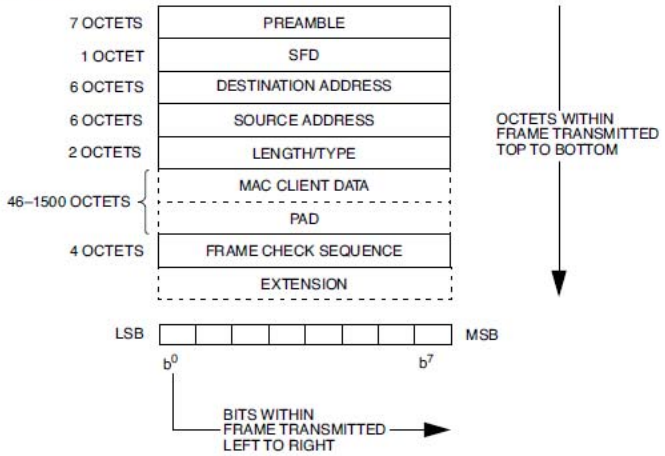

Figure 3–1—MAC frame format

The minimum and maximum frame size limits in 4.4 refer to that portion of the frame from the destination address field through the frame check sequence field, inclusive.

Relative to Figure 3–1, the octets of a frame are transmitted from top to bottom, and the bits of each octet are transmitted from left to right.

Copyright © 2002 IEEE. All rights reserved.

94. Page 40 of the 802.3-2002 standard (shown below) explains the source and destination address fields of the MAC frame.

3.2 Elements of the MAC frame

3.2.1 Preamble field

The preamble field is a 7-octet field that is used to allow the PLS circuitry to reach its steady-state synchronization with the received frame's timing (see 4.2.5).

3.2.2 Start Frame Delimiter (SFD) field

The SFD field is the sequence 10101011. It immediately follows the preamble pattern and indicates the start of a frame.

3.2.3 Address fields

Each MAC frame shall contain two address fields: the Destination Address field and the Source Address field, in that order. The Destination Address field shall specify the destination addressee(s) for which the frame is intended. The Source Address field shall identify the station from which the frame was initiated. The representation of each address field shall be as follows (see Figure 3–2):

a) Each address field shall be 48 bits in length. While IEEE 802® specifies the use of either 16- or 48-bit addresses, no conformant implementation of IEEE 802.3® uses 16-bit addresses. The use of 16-bit addresses is specifically excluded by this standard.
b) The first bit (LSB) shall be used in the Destination Address field as an address type designation bit to identify the Destination Address either as an individual or as a group address. If this bit is 0, it shall indicate that the address field contains an individual address. If this bit is 1, it shall indicate that the address field contains a group address that identifies none, one or more, or all of the stations connected to the LAN. In the Source Address field, the first bit is reserved and set to 0.
c) The second bit shall be used to distinguish between locally or globally administered addresses. For globally administered (or U, universal) addresses, the bit is set to 0. If an address is to be assigned locally, this bit shall be set to 1. Note that for the broadcast address, this bit is also a 1.
d) Each octet of each address field shall be transmitted least significant bit first.

I/G = 0 INDIVIDUAL ADDRESS
I/G = 1 GROUP ADDRESS
U/L = 0 GLOBALLY ADMINISTERED ADDRESS
U/L = 1 LOCALLY ADMINISTERED ADDRESS

Figure 3–2—Address field format

3.2.3.1 Address designation

A MAC sublayer address is one of two types:

a) *Individual Address*. The address associated with a particular station on the network.
b) *Group Address*. A multidestination address, associated with one or more stations on a given network. There are two kinds of multicast address:
   1) *Multicast-Group Address*. An address associated by higher-level convention with a group of logically related stations.

 Copyright © 2002 IEEE. All rights reserved.

95. When used to transport Ethernet data, the RP3-01 protocol includes two layers of addressing: address in the header of each RP3 message, as well as MAC addresses in the header of each MAC frame.

96. The Transport Layer of each node includes a message router that includes a routing table, used to route each message based on the address included in the message header. *See* Ex. 1008 40 reproduced below:

Figure 23 illustrates Transport layer with a common message router for all received messages. External interfaces of Transport layer are shown including ports between Application and Transport layers as well as between Transport and Data link/Physical layers. All messages between protocol layers are transferred over these ports.

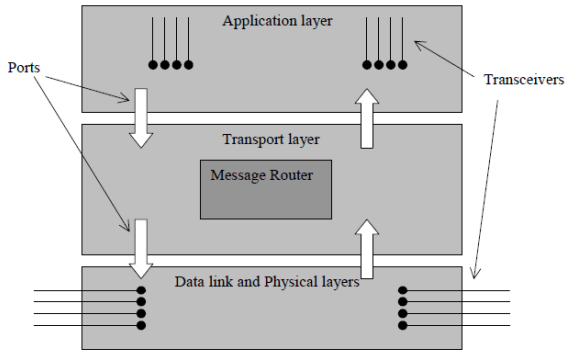

Figure 23: Transport layer with a common message router for all received messages.

When a bus node receives a message from another node, the message is first received by a transceiver at Physical and Data link layers. Then the message is sent to Transport layer, which determines the output transceiver with the help of a routing table. Assuming that transceiver at the Data link/Physical layer is targeted, the message is forwarded back to Data link layer for transmission to the next node. If the payload of the message is processed in the bus node, Transport layer will forward the message to Application layer based on the address of the message. Application layer may send the message back to the bus after processing.

97. Therefore, it is my opinion that the OBSAI standard shown in EX-1008 defines a protocol that creates packets for communication of baseband

representations of carriers over a network between a local baseband module and a remote RF module (remote radio unit RRU). EX-1008 24 ("The protocol stack is based on a packet concept…"); p. 24 Figure 9 (showing "Address" included in each packet by Application layer and used by transport layer to route messages), pp. 42-43 ("4.3.2 Message Format – Address Field"), pp. 43-44 "4.3.3 Message Router"); p. 48 ("The application layer is also responsible for insertion of the message header: address, type, and timestamp fields."), pp. 77-93 (Section 6 RP3-01 Interface for Remote RF Unit); pp. 77-78 (Figures 49 and 50); EX-1009 at p. 53 ("Addressing Principles"). The addresses of the RP3 messages identify a specific RRU and even specific modules / sub-nodes within an RRU. EX-1008 p. 42.

98. In my opinion, by its disclosure of using the OBSAI standard protocol for communicating between host units 230 and RTUs, Wu discloses that its host units 230 packetize digital baseband representations of downlink channel signals for transport over fibers to RTUs, and the packets will include destination information in the packets (destination node and sub-node addresses within RP3 messages) that will identify and route the signals to their destination RTU.

VII. Ground 1: Wu anticipates claims 1-5, 8-11, 13-16, 18-19

A. Independent Claim 1

99. Wu anticipates or renders obvious claim 1. Figs. 1, 2, and 4 of Wu are reproduced below (with annotations).

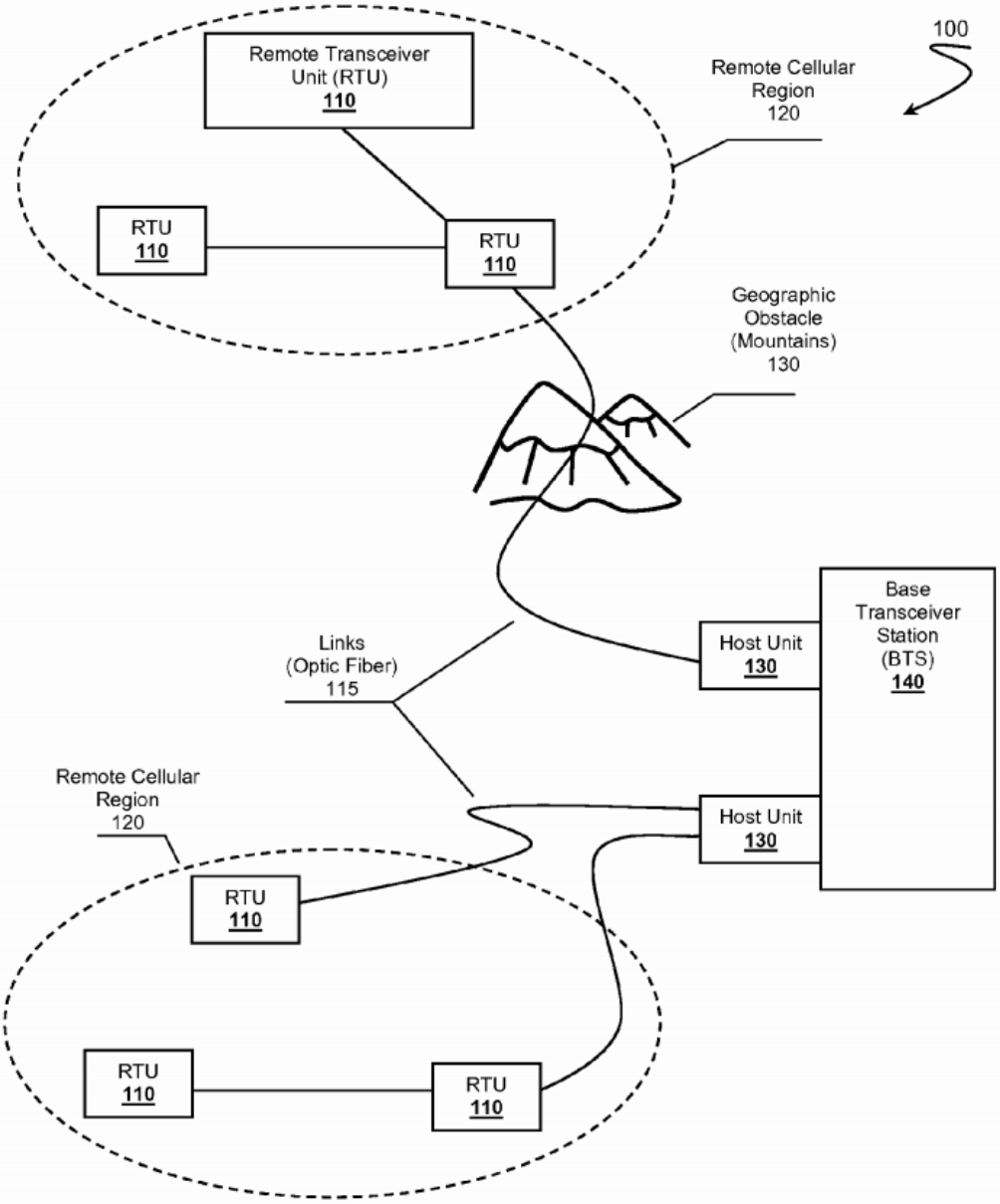
100
Remote Transceiver Unit (RTU) 110
Remote Cellular Region 120
RTU 110
RTU 110
Geographic Obstacle (Mountains) 130
Base Transceiver Station (BTS) 140
Host Unit 130
Links (Optic Fiber) 115
Remote Cellular Region 120
Host Unit 130
RTU 110
RTU 110
RTU 110

Figure 1

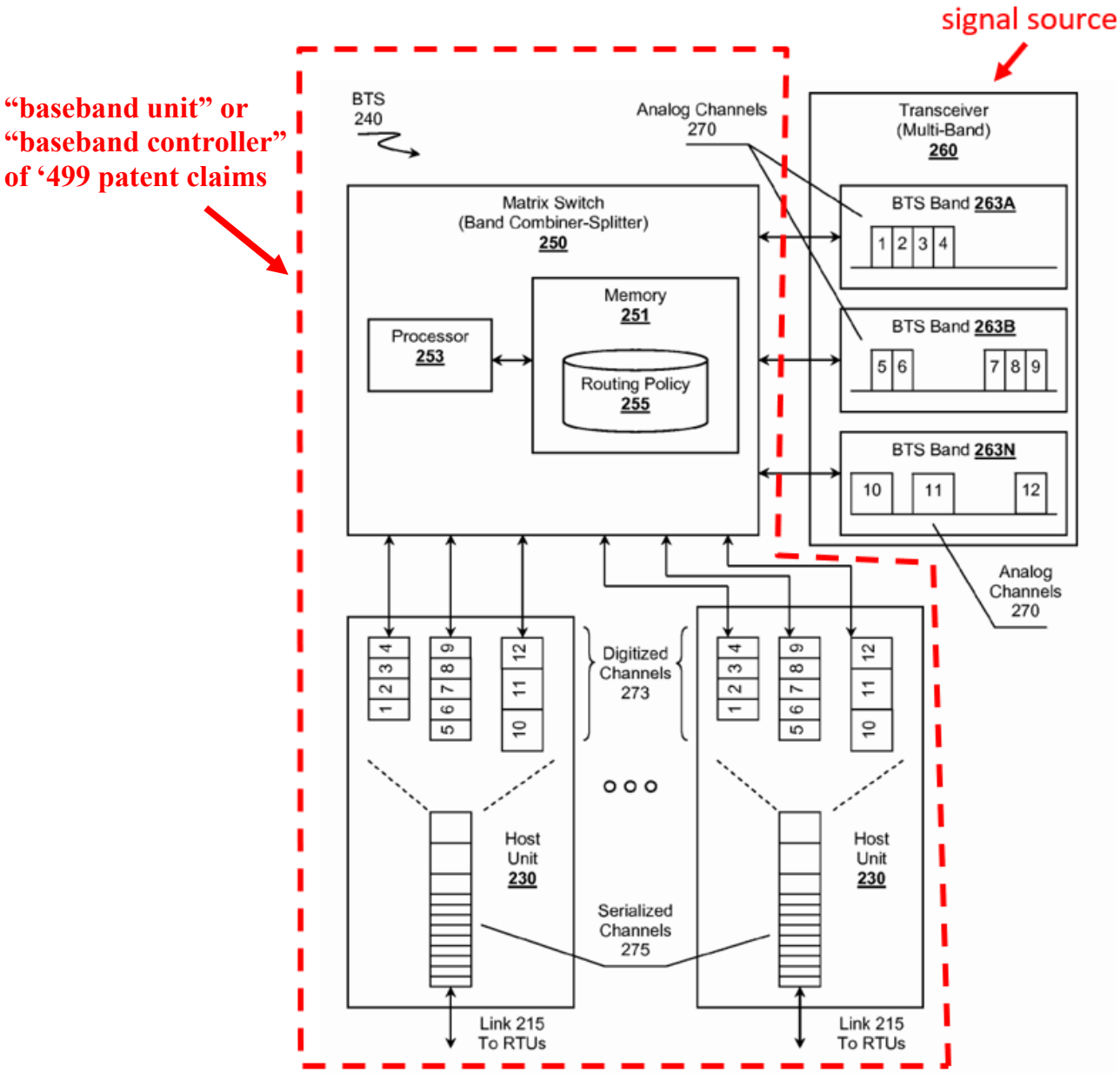
signal source
"baseband unit" or
"baseband controller"
of '499 patent claims
BTS
240
Analog Channels
270
Transceiver
(Multi-Band)
260
Matrix Switch
(Band Combiner-Splitter)
250
BTS Band 263A
1 2 3 4
Memory
251
Processor
253
Routing Policy
255
BTS Band 263B
5 6 7 8 9
BTS Band 263N
10 11 12
Analog
Channels
270
Digitized
Channels
273
Host
Unit
230
Serialized
Channels
275
Link 215
To RTUs

Figure 2

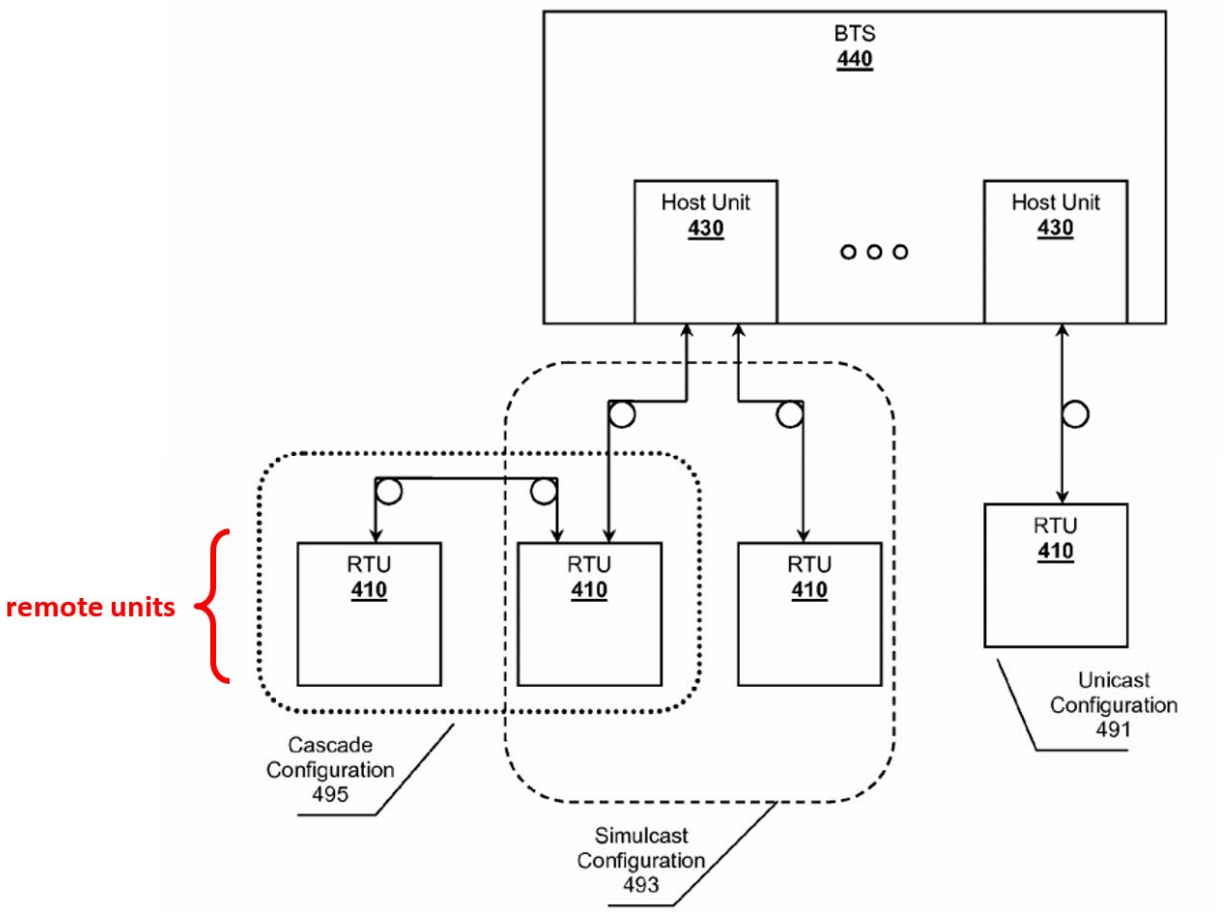

100. Wu discloses that the matrix switch (part of the central node) can be coupled to multiple transceivers. EX-1005 ¶0034 ("more than one multi-band transceiver").

1. Element 1A: "A system for transporting wireless communications, comprising:"

101. 38. Wu discloses a system for transporting wireless communications, for example, where it describes that "[t]he field of the invention is wireless carrier channel technologies." EX-1005 ¶0002. Wu explains that the industry has provided various cell networks to provide coverage for their services.

Id. at ¶0004. Wu describes "known carrier transport systems" (*id*. at ¶0005), and to introduce his improved system notes that "[a] better carrier channel transport system would allow a fine grained control over carrier channels from a single band or multiple bands…." *Id*. at ¶0009. The systems disclosed in Wu transport wireless communications, because they are received or transmitted ultimately via a wireless channel between antennas and mobile transceivers. For example, there is a wireless channel between the RTUs in remote coverage areas and mobile phones located within the coverage areas. Wu's systems are, therefore, systems for transporting wireless communications.

2. Element 1B: "a baseband unit"

102. The combination of the matrix switch 250 and units 130, 230 in Wu make up the baseband unit of Claim 1. The combination of the switch 250 and units 230 make up a system that manages, sends, and receives baseband communications to and from the plurality of RTUs on behalf of the operator's signal source (transceiver 260 of the BTS). Units 130 are shown to be co-located at the BTS in Figure 4 of Wu (and also in Figure 1). In Figure 2 of Wu, we see that a matrix switch is included in the system between units 230 (which are the same units 110 from Figure 1) and the BTS transceiver.

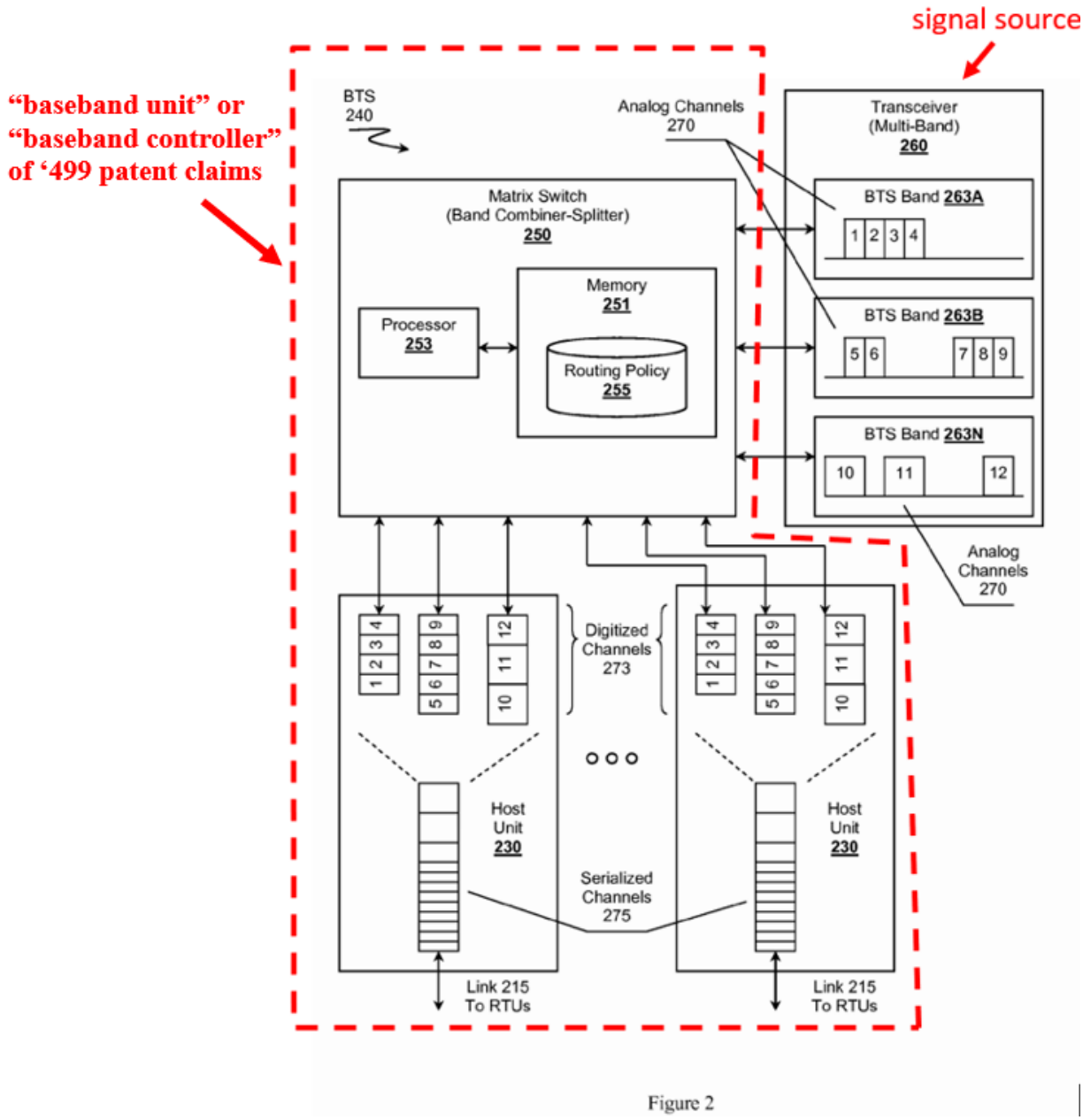

Figure 2

103. In Wu, the host units 130, 230 communicate with the remote RTUs using either OBSAI or CPRI standardized protocols, both of which transport signals as digital baseband signals. EX-1005 ¶¶0031, 0049-0050; EX-1008 55 ("I&Q data format …to be mapped into the payload…"), 59-60 ("each I&Q sample"); *see also* my discussion of OBSAI in section VII.B.3. above. Wu's host

units (230) are illustrated and described as including downconverters and analog to digital converters (ADCs) for converting incoming analog downlink RF signals into digital baseband data (I&Q samples) for transport to RTUs. EX-1005 Fig. 6-2, ¶¶0049, 0054-0055.

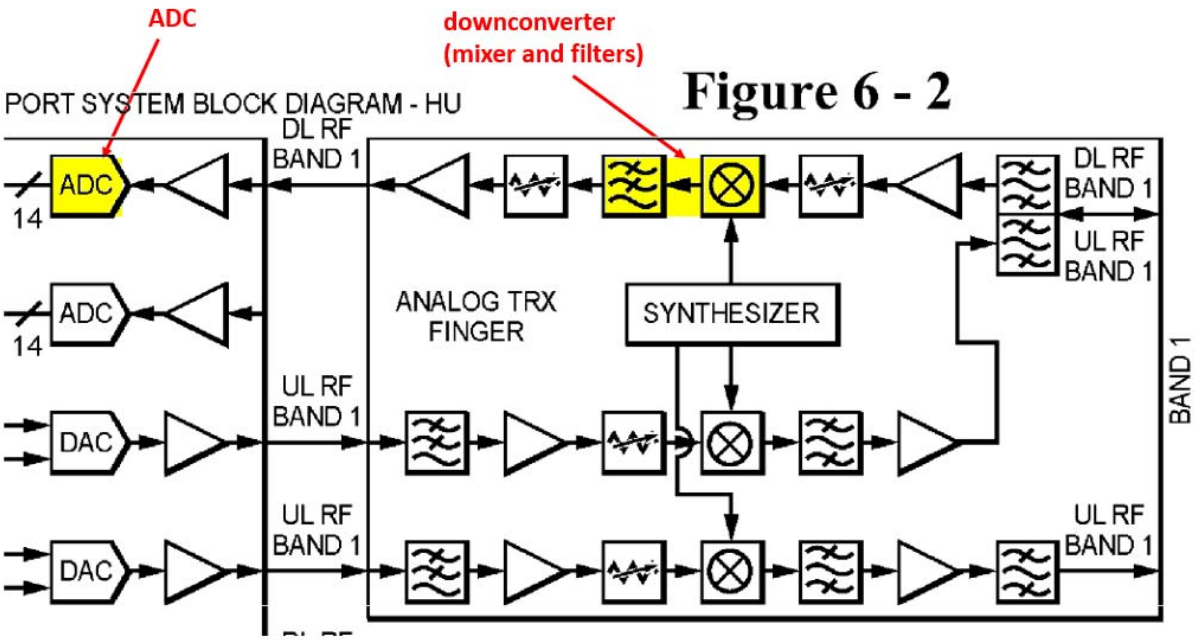

EX-1005 Fig. 6.2.

104. A *baseband* signal is sometimes used to refer to a signal with its frequency centered at or near zero. For example, it can be used to refer to a signal in a base station after it has been down-converted from its original RF frequency or prior to being translated to its intended RF frequency. Translating or shifting an RF signal to baseband results in a pair of signal streams (an I-stream and a Q stream) that together preserve how the original RF signal was modulated. A baseband signal can be analog or digital. When in digital form, the I and Q signals

are expressed as samples of the I and Q streams (sometimes referred to as I&Q samples or I&Q data). Both OBSAI and CPRI communicate signals in digital baseband form (as I&Q samples). The I&Q samples or IQ data referred to by OBSAI and CPRI are examples of digital baseband signals. The baseband signals represent and preserve the amplitude and phase modulation characteristics of the RF signals to be used according to the chosen air-interface scheme to communicate over the air.

105. Units 130 are shown to be co-located at the BTS in FIG. 4 of Wu (and also in Figure 1). Figure 2 shows a matrix switch is included in the system between units 230 (which are the same units 130 from Figure 1) and the BTS transceiver 260. Likewise, Figure 2, shows multiple components of a BTS. When reading the '499 claims on the Wu system, the matrix switch is included in the claimed baseband unit, while the multiband transceiver corresponds to a signal source. The transceiver is the portion of the base transceiver station (base station) that converts or modulates and demodulates user data into symbols based on the chosen air interface scheme (FDMA, CDMA, OFDM, TDMA etc…).

3. Element 1C: "a plurality of signal sources, including at least a first signal source and a second signal source"

106. Figure 2 of Wu shows that matrix switch 250 communicates with a multi-band transceiver 260, which is a signal source. The multiband transceiver 260 delivers signals to the matrix switch representing multiple frequency bands

(each band including multiple carrier channels). EX-1005 ¶¶0034, 0035-39, Fig. 2. The communication between the transceiver 260 and the matrix switch is described, for example, in paragraph 0038:

> Received channels 1-12 from bands 263 are forwarded to matrix switch 250. Matrix switch 250 can operate as a combiner/splitter, preferably an analog combiner/splitter, where bands 263 can have their individual channels 1-12 split into individual channels or groups of channels (e.g., 1-4, 5-6, 7-9, etc.). In a preferred embodiment, matrix switch 250 routes analog channels 270 to an appropriate host unit 230 according to a policy 255 for distribution to remote regions or RTUs. Host units 230 further distribute the channels to RTUs over links 215. As referenced previously, matrix switch 250 can also receive channel signals from host units 230 and can combine the channels back into their proper form for transmission within bands 263 for transmission via multi-band transceiver 260.

EX-1005 ¶0038. Wu also discloses that the contemplated system can be coupled to "more than one of multi-band transceiver 260." EX-1005 ¶0034. Therefore, Wu discloses first and second signal sources as claimed.

4. Element 1D: "a plurality of remote units, including at least a first remote unit and a second remote unit"

107. The remote transceiver units (RTUs 110, 310, 410) in Wu are a plurality of remote units. *See, e.g.*, EX-1005 at Fig. 1, ¶0030, ¶0033, ¶0011. The RTUs in Wu are shown distributed in coverage areas remote from the BTS and units 130. *See, e.g.*, EX-1005 at Fig. 1; ¶0030 ("Host units 130 relay digitized signals between BTS 140 and remote transceiver units (RTUs) 110 within the remote cell regions 120 using the physical links 115, preferably fiber optic links.");

¶0033 ("In some embodiments, an RTU 110 is geographically separated from BTS 140 by at least 10 Km. It is also contemplated that a single host unit 130 associated with a BTS 140 could link to two or more RTUs 110 that are also geographically separated from each other by at least 10 Km. As used herein 'geographically separated' is used euphemistically to represent that two devices are separated by significant distance as opposed to be trivially local to each other.").

5. Element 1E: "wherein the baseband unit comprises a plurality of interfaces to communicatively couple the baseband unit to the plurality of signal sources"

108. Figures 2 and 5-2 of Wu illustrate that the matrix switch 250 includes multiple interfaces to the transceiver 260 which couple the matrix switch (part of the claimed *baseband unit*) to the transceiver (one of the claimed *signal sources*).

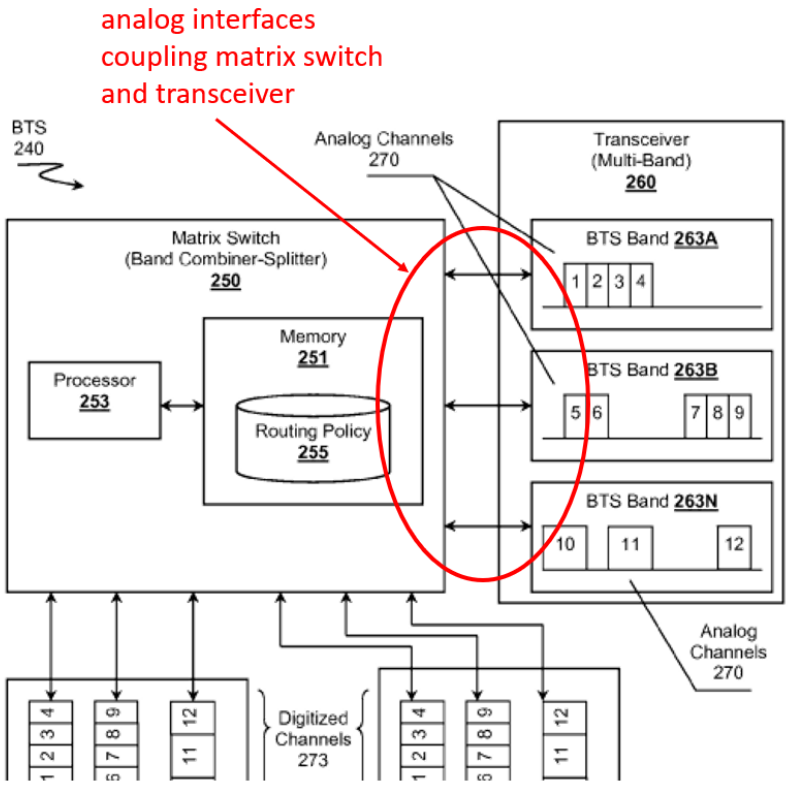

EX-1005 Fig. 2.

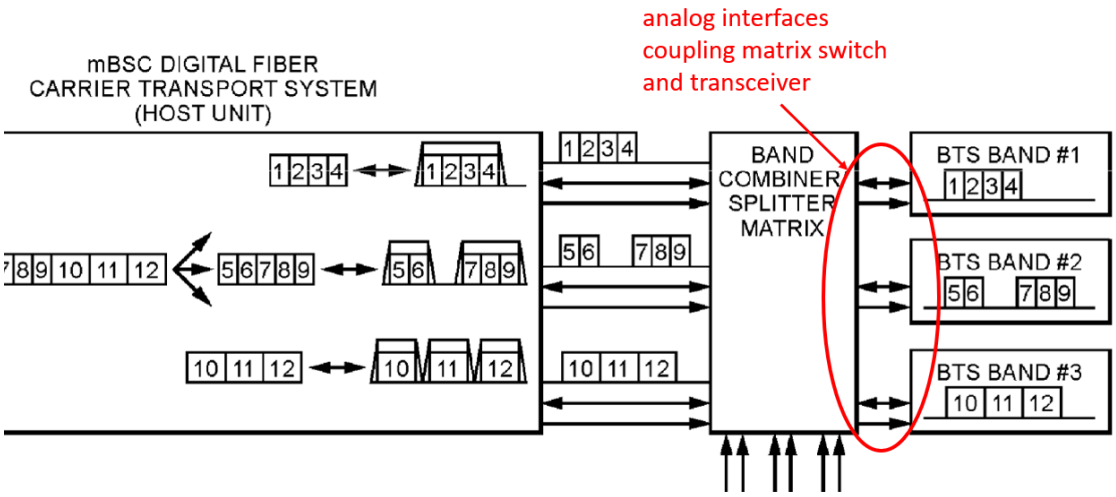

EX-1005 Fig. 5-2. The communication links shown, e.g., in Figures 2 and 5-2, between the matrix switch and the transceiver 260 inherently include an interface in the matrix switch (which considered part of the "baseband unit" of the '499

patent claims) for communicating over these lines to the multi-band transceiver. Further, where multiple transceivers 260 are included as taught in ¶0034, additional interfaces at the matrix switch would necessarily be provided. Wu describes that the interface between the matrix switch and transceivers is an analog interface. EX-1005 ¶0037 ("analog channels").

6. Element 1F: "wherein the baseband unit is configured to receive a plurality of radio resources from the first signal source and the second signal source"

109. The matrix switch 250 receives a plurality of downlink analog carrier channels in multiple bands from the multi-band transceivers 260. EX-1005 ¶0034-0039, Fig. 2. Per the '499 patent specification, analog carrier channels are examples of radio resources. *See, e.g.*, EX-1001 12:6-7 ("radio resources (such as RF carriers, CDMA codes or TDMA time slots)"). The downlink carrier channel signals, e.g., shown as channels 1-12 in Figure 2, are examples of radio resources received from a signal source. EX-1005 at Fig. 2, ¶0038. Wu also discloses that there can be multiple transceivers connected to the matrix switch. EX-1005 ¶0034 ("more than one of multi-band transceiver 260."). In that case, the matrix switch would receive analog channels (*radio resources*) from first and second signal sources.

110. The analog signals from a transceiver are "radio resources" because in these signals the user data or signal has been modulated by the transceiver onto

different timeslot and frequency resources in accordance with the desired RF air interface scheme (FDMA, TDMA, CDMA). The modulation process at the transceivers converts underlying user data into signals more appropriate for wireless transmission over radio waves. For any chosen air interface scheme there are a limited number of resources (i.e., frequency divisions (sometimes called channels or carriers), time divisions (called timeslots), and/or codes) that can carry modulated signals over the air. Later schemes typically pack a greater number of resources into the same amount of time and frequency spectrum. Ultimately, the modulated signals are transmitted wirelessly within the radio (RF) spectrum. But when originally created at the transceiver, the signals can be at lower frequencies such as at baseband, and only after the modulated signals are delivered to the remote antenna units are they translated (sometimes also called up-converted) to radio frequencies within licensed radio spectrum for broadcast over the air.

7. Element 1G: "wherein the baseband unit is configured to send a digital representation of a first set of radio resources to the first remote unit at a first point in time, the first set of radio resources for transmission at an antenna of the first remote unit"

111. Wu discloses that the combination of matrix switch 250 and units 230 send digital representations of the downlink channel signals (*radio resources*) individually or "in arbitrary groups" (which are sets) to RTUs. EX-1005 ¶¶0009, 0011, 0038-0039, 0047, 0049, Claim 16 ("a set of carriers"). Units 230 also

include analog-to-digital converters for creating digitized representations of the carrier signals for transport to the RTUs. *See, e.g.*, EX-1005 ¶¶0030, 0054, Fig. 6-2 ("ADC"). In addition, both OBSAI and CPRI are digital protocols used to send digital baseband representations of modulated cellular signals.

112. Wu also describes that from time to time the number of channels routed to an RTU may change by means of a routing policy that includes rules for reacting to events and conditions. EX-1005 ¶¶0038-47, ¶0039("…to ensure proper coverage given various conditions…[including] usage, load, weather, events…"); ¶0041("The rules of policy 255 can include one or more criterion representing a trigger…"). The triggered routing actions include, e.g., "to allocate more channels" to a region "to increase the bandwidth available." *Id.* ¶0046. The period of time prior to satisfying the triggering criterion is an example of "at a first point in time" as claimed.

113. Wu discloses that the RTUs provide "wireless coverage" to cellular regions or cell area. EX-1005 ¶¶0030, 0004. It is well understood that "wireless" communications are transmitted using an antenna, and that there are antennas associated with the RTUs for providing the wireless communications. One of skill in the art would understand that transceiver units providing wireless coverage in a cell area inherently include antennas that radiate and receive RF energy to provide the wireless coverage.

8. Element 1H: "wherein the baseband unit is configured to send a digital representation of a second set of radio resources to the first remote unit at a second point in time, the second set of radio resources for transmission at the antenna of the first remote unit;"

114. As explained above, Wu describes a routing policy that includes rules for reacting to events and conditions. EX-1005 ¶¶0038-0047. One of skill understands this to mean that from time to time the system can change which channels are routed to which RTUs for transmission over the RTU's antenna since the rules for routing are in reaction to events and conditions, i.e., events and conditions which can change with time. The triggered routing actions include, e.g., "to allocate more channels" to a region "to increase the bandwidth available." *Id.* ¶0046. The time after the matrix switch (part of the *baseband unit*) reacts to a triggering condition to allocate more channels to an RTU to increase the bandwidth available, is "a second point in time" as recited in this limitation.

115. As already noted above, Wu discloses that the RTUs provide "wireless coverage" to cellular regions or cell area. EX-1005 ¶¶0030, 0004. It is well understood that "wireless" communications are transmitted using an antenna, and that there are antennas associated with the RTUs for providing the wireless communications. One of skill in the art would understand that transceiver units providing wireless coverage in a cell area inherently include antennas that radiate and receive RF energy to provide the wireless coverage.

9. Element 1I: "wherein a number of radio resources in the first set of radio resources is different from a number of radio resources in the second set of radio resources"

116. Wu's routing policy can trigger the system "to allocate more channels" to a region "to increase the bandwidth available" in response to conditions. EX-1005 ¶0046. This means that the number of channel signals in the first set (prior to triggering event) is different (fewer) than the number of channel signals in the second set (after triggering event), satisfying this limitation.

10. Element 1J: "wherein the baseband unit is configured to receive digital signals from each of the plurality of remote units."

117. Wu discloses that the system is bi-directional, meaning the RTUs send digital representations of uplink signals over the fibers to the units 230. EX-1005 ¶¶0036, 0049. That is, Wu discloses that wireless transmissions received by the RTUs from wireless devices in the coverage areas are digitized by the RTUs and are sent back upstream over the fiber cabling to the units 230. See for example, paragraph 0036:

> The discussion regarding the routing of channels 1-12 from host units to RTUs is presented as channels flowing from transceiver 260, through host units 230, to RTUs. It should be noted that the disclosed <u>system is considered to be bi-directional where carrier channel signals can be received by host units 230 from RTUs</u>, then forwarded to multi-band transceiver 260 or a booster for transmission within bands 263.

EX-1005 ¶0036. See also, paragraph 0049:

> One should appreciate that host unit 230 can operate bi-directionally where it can received [sic] serialized channels 275 from an RTU, de-serialize the channels back into digitized channel 273, restore analog channels 270, and send the signals of the channels back to switch 250 within their proper channels 270. It should be appreciate [sic] that digitizing or serializing carrier channels is considered to include digitizing or serializing data carried by the channels as desired.

Id. ¶0049.

118. Wu discloses that the remote units (RTUs) include analog to digital converters so that the RTUs can digitize signals for digital transport back upstream to the units 230. *See, e.g., id*. at Fig. 7-2 (showing schematic of an RTU including multiple "ADC" elements); ¶0056 ("FIG. 7 is a composite image of Figs. 7-1, and 7-2 and provides a possible schematic of an RTU having similar structure of the host unit of FIG. 6 and that mirrors a host unit's functionality."). The functionality of the unit 230 in the downlink that is mirrored by the RTU in the uplink includes creating a digital representation of the signal. *See id*. at ¶0049:

> In a preferred embodiment, the host units 230 are configured to optimally digitize desirable channels as opposed to a complete band. For example with respect to illustrated band 263B, a host unit can digitize, using an Analog to Digital Convert (ADC), a portion of band 263B that is less than the full width of the band represented by the underline and that only corresponds to an envelope around one or more carrier channels (e.g., an envelope around channels 5 and 6 and/or an envelope around channels 7-9). Additionally, host unit 230 preferably filters out unused white space within bands 263 to reduce bandwidth utilization on links 215 between host units 230 and RTUs. Host units 230 preferably serialize digitized channels 273 and sends the digitized data over communications links to one or more RTUs.

119. Therefore, in Wu's system units 230 (which along with the matrix switch forms the baseband unit) are configured to receive digital signals from each of the plurality of remote units as recited in this claim.

B. Independent Claim 8

120. The language of claim 8 closely tracks the language of claim 1. Shown below is a side-by-side comparison of Claim 8 and Claim 1.

Claim 1	**Claim 8**
1. A system for transporting wireless communications, comprising:	8. A baseband controller for use in the transport of wireless communications, comprising:
a baseband unit;	
a plurality of signal sources, including at least a first signal source and a second signal source;	
a plurality of remote units, including at least a first remote unit and a second remote unit;	
wherein the baseband unit comprises <u>a plurality of interfaces</u> to communicatively couple the baseband unit to the plurality of signal sources;	<u>a plurality of interfaces</u> to communicatively couple a baseband unit to a plurality of signal sources, including at least a first signal source and a second signal source;
	at least one interface to communicatively couple the baseband unit to a plurality of remote units, including at least a first remote unit;

wherein the baseband unit is configured to receive a plurality of radio resources from the first signal source and the second signal source; wherein the baseband unit is configured to send a digital representation of a first set of radio resources to the first remote unit at a first point in time, the first set of radio resources for transmission at an antenna of the first remote unit; wherein the baseband unit is configured to send a digital representation of a second set of radio resources to the first remote unit at a second point in time, the second set of radio resources for transmission at the antenna of the first remote unit; wherein a number of radio resources in the first set of radio resources is different from a number of radio resources in the second set of radio resources; and wherein the baseband unit is configured to receive digital signals from each of the plurality of remote units.	wherein the baseband unit is configured to receive a plurality of radio resources from the first signal source and the second signal source; wherein the baseband unit is configured to send digital representations of a first set of radio resources to the first remote unit at a first point in time, the first set of radio resources for transmission at an antenna of the first remote unit; wherein the baseband unit is configured to send digital representations of a second set of radio resources to the first remote unit at a second point in time, the second set of radio resources for transmission at the antenna of the first remote unit; and wherein a number of radio resources in the first set of radio resources is different from a number of radio resources in the second set of radio resources.

121. The preamble of claim 8 (Element 8A) recites "a baseband controller" rather than simply a "system" as recited in claim 1. There is no distinction in the

patent specification between a "baseband controller" and a "baseband unit."[1] The specification never uses the term "baseband controller", nor does the body of claim 8 ever refer back to the "baseband controller." Instead, the body of claim 8, like claim 1, almost immediately introduces a "baseband unit" and all subsequent limitations of claim 8 modify the baseband unit.

122. To the extent the preamble of claim 8 adds any limitation beyond a "baseband unit," then Wu discloses a baseband controller, because Wu discloses that the matrix switch (part of the *baseband unit* as discussed above) using its routing policy "controls" where the digital baseband representations of the carrier channels are distributed and used in the system. *See, e.g.*, EX-1005 ¶¶0009 ("fine grained ***control*** over carrier channels"); 0039-0040.

123. Element 8B is taught by Wu for the same reasons as Element 1E.

124. Element 8C ("at least one interface to communicatively couple the baseband unit to a plurality of remote units, including at least a first remote unit; ") is taught by Wu where it teaches the host units 230 (part of the claimed "*baseband unit*") each include a digital optical cable interface for communicating with RTUs

[1] Both the "baseband unit" and the "baseband controller" of the claims appear to be referring to the same component in the '499 patent, specifically the digital access unit (DAU). As mentioned above, neither "baseband unit" nor "baseband controller" is used in the specification.

(the claimed "remote units") using the standardized OBSAI or CPRI interface protocols. EX-1005 ¶¶0031, 0049-0050, Figs. 1, 2, 4, 5.

125. Element 8D is taught by Wu for the same reasons as Element 1F.

126. Element 8E is taught by Wu for the same reasons as Element 1G.

127. Element 8F is taught by Wu for the same reasons as Element 1H.

128. Element 8G is taught by Wu for the same reasons as Element 1I.

129. Claim 8, therefore, is unpatentable for the same reasons that claim 1 is unpatentable.

C. Independent Claim 14

130. The limitations of Claim 14 track similar language found in claims 1 and 8 except Claim 14 is written as a method claim. Using Wu's systems would result in performing the method of claim 14. Claim 14 does not include any limitation that is not already present in claims 1 and 8. Therefore, Claim 14 is unpatentable for the same reasons as claims 1 and 8.

131. To the extent the preamble of claim 14 (Element 14A) recites a limitation ("A method for providing digital signals in a Distributed Antenna System (DAS)" Wu discloses this. Wu's system provides digital signals in a DAS. Wu's system is a DAS because it includes a central unit (Wu's matrix switch/host units) that transport base station signals (from Wu's multi-band transceiver) to a plurality of remote antenna units (Wu's RTUs) distributed within a desired

coverage area to extend the RF coverage of the base station into the coverage area. In addition, the host units in Wu include analog to digital converters "ADCs" that convert carrier channels to digital baseband signals for distribution to the RTUs of Wu's system.

132. Element 14B is taught by Wu for the same reasons as Element 1F.

133. Element 14C is taught by Wu for the same reasons as Element 1G.

134. Element 14D is taught by Wu for the same reasons as Element 1H.

135. Element 14E is taught by Wu for the same reasons as Element 1I.

D. Dependent Claims

1. Claims 2, 9, 19:

"wherein the baseband unit is configured to packetize each digital representation of a radio resource"

"packetizing, at the baseband unit, at least a subset of the plurality of radio resources"

136. Wu discloses these limitations by teaching that the host units 230 and the RTUs communicate the digitized downlink carrier channel signals using either of the protocols provided in the OBSAI standard or the CPRI standard. *See* EX-1005 ¶¶0031 ("Suitable standards include…CPRI….OBSAI…"), 0049, 0050. Both of these standards teach packetizing digital baseband representations of radio resources.

137. The OBSAI protocol packetizes digital baseband representations of radio resources between a local baseband module and a remote RF module (remote

radio unit RRU). The interface between the baseband module and the RF module is called the RP3 interface, and when the RF module is remote from the baseband module it is further called an RP3-01 interface. As discussed above in my introduction to the OBSAI standard, the RP3 (and RP3-01) interface expressly relies on packetizing. *See, e.g.*, EX-1008 at 24 ("The [RP3] protocol stack is based on a packet concept…"), Figure 9. The RP3 interface relies on a defined data structure called a "message." Each message is an example of a packet. The message is always 19 bytes in length, and its first 13 bits always contain the node and sub-node address used for routing the message. *See* EX-1008 at 42-44; 48 ("The application layer is also responsible for insertion of the message header: address, type, and timestamp fields."); 77-78 (Figures 49 and 50); EX-1009 at 53 ("Addressing Principles"). The Message structure is shown below in Figure 25 taken from page 42 of the RP3 OBSAI standard (EX-1008):

The address field is divided into two sub-addresses, the node address and the sub-node address as illustrated in Figure 25.

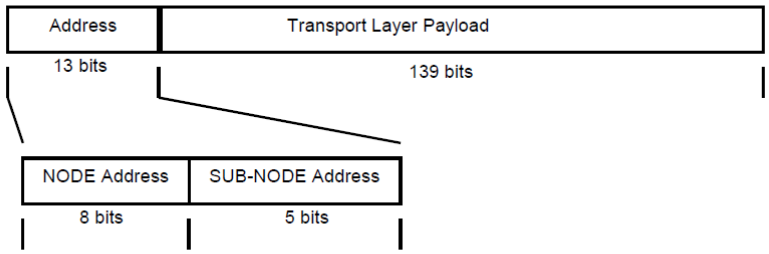

Figure 25: Address sub-fields.

138. Page 26 of the RP3 specification (EX-1008)(shown below) shows in more detail the message (packet) format which includes a header having an

Address field, a Type field, and time-stamp field, and a payload field. This message format is used to communicate over the RP3 and RP3-01 interface.

4.2.1 Message Overview

A fixed message format is used for all data that is transferred over the RP3 or RP3-01 (see Section 6) bus. Figure 11 shows the message structure including partitioning of the message into bytes. Each byte of a message is first 8b10b encoded as shown in the figure and then transmitted to a link. 8b10b encoding is part of Physical layer functionality. The leftmost byte of the address field is first transmitted to the link while the rightmost byte of payload is last sent to the link. If data from other busses is transferred over the RP3 or RP3-01, it must be realigned such that MSB is transmitted first as defined in Figure 11.

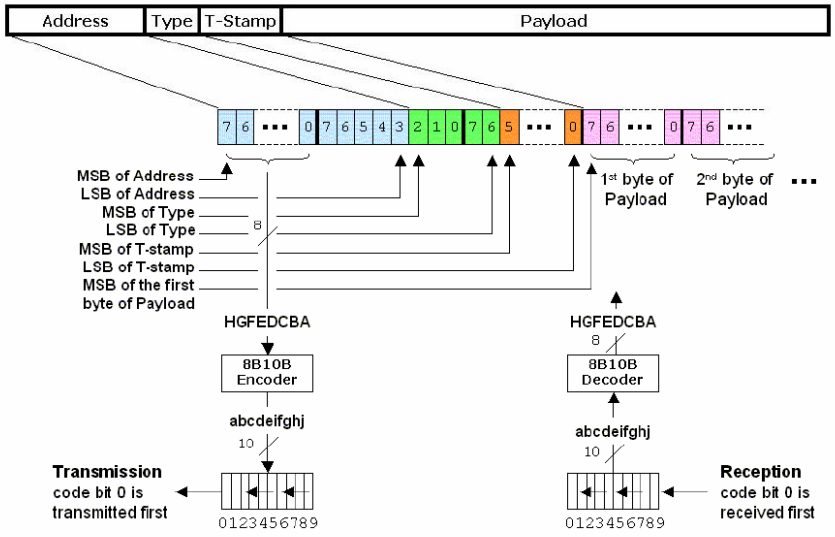

Figure 11: Message format of RP3 protocol stack.

139. "The address field is used to route the data to its destination point." EX-1008 at 39:12-15:

The address field, which is used to route the data to its destination point, occupies the first 13 bits of the message. The remaining part of the message, including type, timestamp, and payload, is passed transparently by the Transport Layer.

140. "The address controls the routing of each message" and can specify not only individual nodes but also individual sub-nodes within a node. EX-1008 at

42 ("4.3.2 Message Format – Address Field"). Therefore, the address field uniquely identifies not only a corresponding RRU, but the sub-node portion of the address can identify a particular module within any given RRU. As used in Wu, the address would identify a specific RTU and could even identify the particular sub-node within the RTU intended to receive the message (packet).

141. The messages defined by the RP3 protocol include payload data as complex baseband (I&Q) carrier samples. *See, e.g.*, EX-1008 55 ("The WCDMA downlink data stream has a chip rate of 3.84 Mcps with **an I&Q data** format each of 16 bits giving 4 bytes per chip. This allows 4 consecutive chips of a single WCDMA signal (antenna-carrier) to be mapped into the payload…"); *see also* 59-60 ("[For 802.16,] **each I&Q sample** consists of four bytes which allows four consecutive **I&Q samples** of a single 802.16 signal (antenna-carrier) to be mapped into the payload…") (emphasis added). Again, as noted above, each message includes a header and payload fields. The header of each packet includes address information as shown on Figure 9 and 11 above that identifies the destination node for the message. The payload field will include digital samples of an antenna-carrier signal in baseband (I&Q) format.

142. The RP3-01 protocol is an extension of the RP3 interface that is designed for data transfer between a BTS and one or more remote RF blocks or

"RRUs". The RP3-01 protocol combines the RP3 protocol with a physical layer suitable for long distances. *See* EX-1008 79:

> **6.2.2 RP3-01 - Transfer of RP1 Data Over RP3**
>
> RP3-01 is an extension of the RP3 protocol specifically designed for data transfer between a BTS and one or more remote RF units. RP3-01 is equivalent to the RP3 protocol except for the fact that different physical layer technologies, suitable for supporting data transmission over long distances, are applied. In order to minimize the number of connections to RRUs, RP1 data is mapped into RP3 messages. RP1 data includes Ethernet and frame clock bursts.

143. The RP3-01 protocol uses the same RP3 messages of the RP3 protocol, but also defines protocols for transmitting additional RP1 control information (such as frame clock bursts and Ethernet) over the RP3 link using the RP3 message format. *Id*.

144. Therefore, by teaching to use the OBSAI protocol for communications to the RTUs, Wu taught the limitation of claims 2, 9 and 15.

<u>CPRI</u>

145. In addition and in the alternative, use of the CPRI protocol results in packetizing the digital representations of the downlink carrier signals.

146. The CPRI standard defines a protocol for transporting a mobile network operators' digitized radio carrier signals between different portions of radio base station equipment. The protocol defines how to map and frame the digitized radio carrier signals as baseband (IQ) data for transport over a CPRI link.

The specification also teaches (but does not require) that address information can be used to employ CPRI links in networking topologies.

147. The Common Public Radio Interface (CPRI) Specification version 4.0 (2008-06-30) is Exhibit 1007. CPRI defines a public standard protocol for base station equipment sub-components to digitally interface or communicate with each other. *See, e.g.*, EX-1007 at 4 ("Introduction"); *id*. at 6 ("This specification defines the protocols for…"). The standard divides the base station functions into two halves or components which are labeled Radio Equipment Control (REC) components and Radio Equipment (RE) components. EX-1007 at 4 ("Introduction"). The REC and RE are also called nodes in the CPRI standard. *Id*. at 6. By standardizing how these two halves of a base station communicate, different manufacturers can independently develop separate components that use the CPRI protocols. *See id*. at 4 ("Motivation for CPRI").

148. The CPRI standard recognizes that this division of the base station functions and the defined protocol for communicating between them permits the RE subcomponent to be located remotely from the REC subcomponent. *See, e.g.*, EX-1007 at 9 ("2.2 System Architecture. Radio base stations should provide deployment flexibility for the mobile network operators, i.e., in addition to a concentrated radio base station, more flexible radio base station system architectures involving <u>remote</u> radio equipment shall be supported.") (emphasis

added); *id*. at 4 ("The physical layer (layer 1) supports…an optical interface (e.g. for radio base stations with remote radio equipment).") (emphasis added).

149. The CPRI standard describes the functional split between the REC component and the RE component:

> The REC contains the radio functions of the digital baseband domain, whereas the RE contains the analogue radio frequency functions. The functional split between both parts is done in such a way that a generic interface based on In-Phase and Quadrature (IQ) data can be defined.

EX-1007 at 9.

150. The CPRI interface is intended to transport mobile network operators' signals for supporting their wireless communication services. *See, e.g.*, EX-1007 at 9 ("mobile network operators"). The CPRI standard refers to payload data as the user plane data or digitized radio which takes the form of digital baseband (IQ) samples. EX-1007 at 6. Several IQ data flows are sent via one physical CPRI link. The IQ data is not the ultimate user's data, but rather signals modulated with the user's data according to the chosen air interface standard. "Each IQ data flow reflects the data of one antenna for one frequency carrier, the so-called antenna-carrier (AxC).)". EX-1007 at 6. An "antenna-carrier (AxC)" is defined as:

> One antenna-carrier is the amount of digital baseband (IQ) U-plane data necessary for either reception or transmission of only one carrier at one independent antenna element.

EX-1007 at 7. Each CPRI link can multiplex multiple baseband (IQ) data flows over the link, where each data flow represents the data of one antenna for one carrier. *See* EX-1007 at 6 ("User Plane Data:…").

151. The CPRI standard defines the rules for mapping and framing baseband (IQ) data samples into a defined frame structure. *See, e.g.*, EX-1007 at 32 ("4.2.7.2 Mapping of IQ-data"); *id.* at 33 ("Mapping of IQ Samples within one AxC Container. An AxC Container is a sub-part of the IQ data block of a basic frame."). The framing structure is defined and discussed at length in section 4.2.7 of the CPRI standard. EX-1007 at 29-49 ("4.2.7 Frame Structure"). In summary, the CPRI 10ms frame is divided into 150 hyperframes; each hyperframe includes 256 basic frames; each basic frame includes 1 control word and 15 data words. *See, e.g.*, EX-1007 p. 41 (Figure 14):

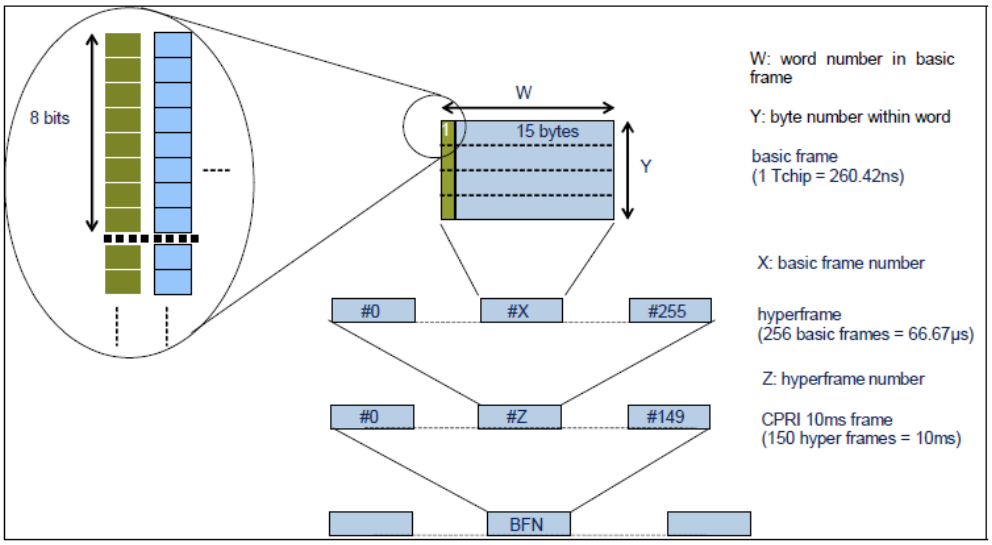

Figure 14: Illustration of the frame hierarchy and notation indices

One basic frame is illustrated in the CPRI standard at Figure 7:

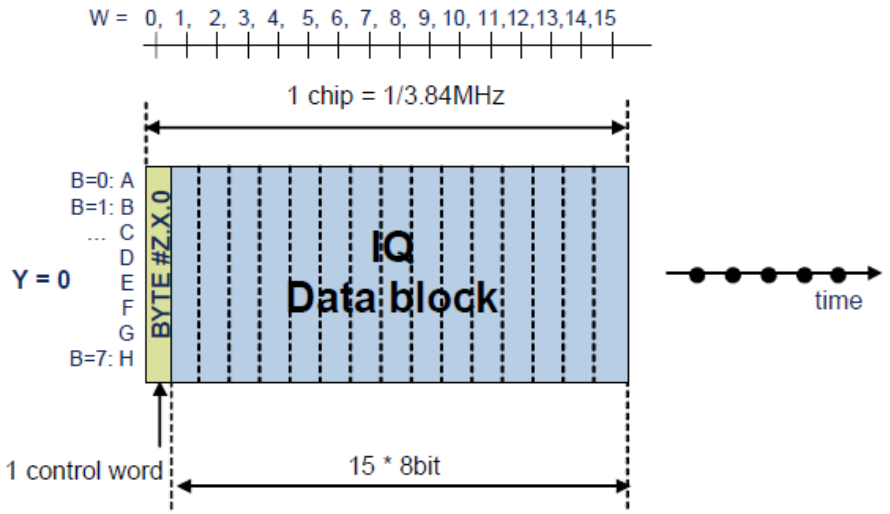

Figure 7: Basic frame structure for 614.4 Mbit/s CPRI line bit rate

EX-1007 at 30. Figure 16 shows how 256 basic frames are arranged to form a hyperframe:

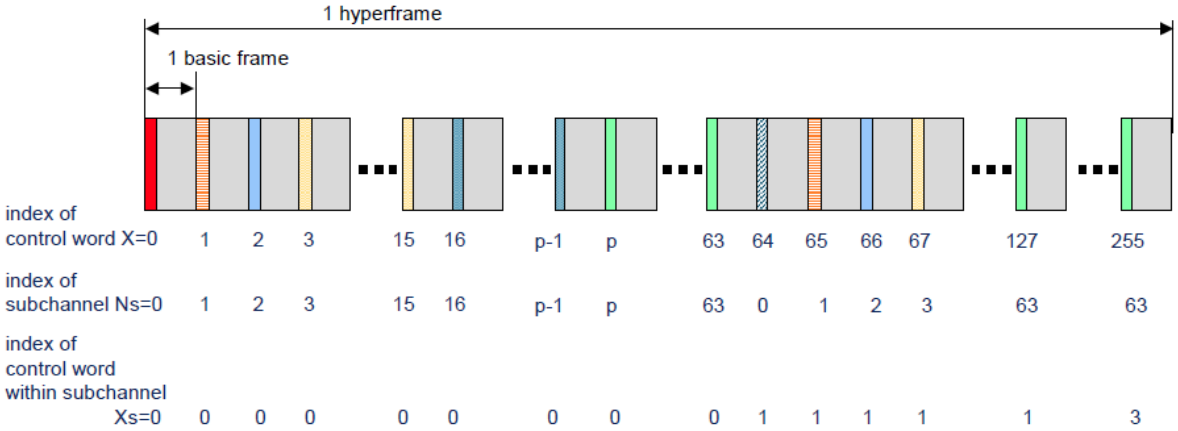

Figure 16: Illustration of control words and subchannels within one hyperframe

EX-1007 42. Note that the hyperframe shown in Figure 16 defines fields for control words (each control word having a different color) while the remainder of the frames (shown in grey) contain baseband (IQ) data fields. The size of the

words in each basic frame depends on the line bit rate chosen for implementation. EX-1007 30-32. Figure 16 of the CPRI standard illustrates how one hyperframe is constructed of 256 basic frames where each basic frame begins with a control word. Figure 15 describes the contents/uses for each of the color coded control words shown in Figure 16. EX-1007 42.

152. The framing protocol allows multiple antenna-carriers (AxC) to be time division multiplexed in one CPRI link by defining how different positions in the basic frame can be occupied by different baseband (IQ) data of different antenna-carriers. *See, e.g.*, EX-1007 at 34 (Figure 13):

Figure 13 illustrates these mapping rules for both mapping options.

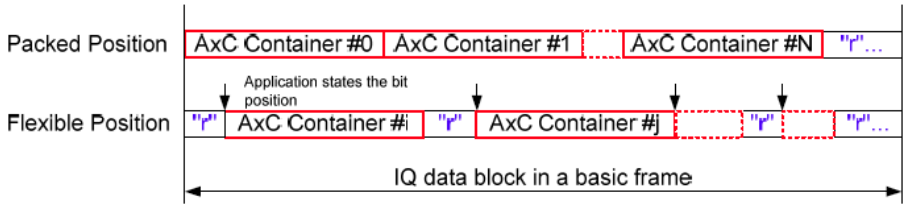

Figure 13: Example of **AxC Container** mapping in the IQ data block

153. The basic frames, hyperframes, and 10ms frames of the CPRI standard are each examples of units of data and the use of the CPRI communication protocol is an example of creating units of data to be sent over a network. In my opinion, therefore, the CPRI communication protocol is an example of packetizing digital representations of radio resources.

154. The CPRI standard recognized that the CPRI protocol links can be used in multiple configurations including different networking topologies. *See* EX-1007 at 9 ("The common public radio interface may also be used as a link between two nodes in system architectures supporting networking."); *see also* 10-12:

> 2.3 Reference Configurations
> …Furthermore, three basic networking topologies may be used for the interconnection of REs:
> - Chain topology, an example is shown in Figure 5A
> - Tree topology, an example is shown in Figure 5B
> - Ring topology, an example is shown in Figure 5C

The CPRI standard illustrates various topologies that can be achieved using the CPRI standard in Figures 5, 5A, 5B, 5C (star, chain , tree, ring) (EX-1007 11-12):

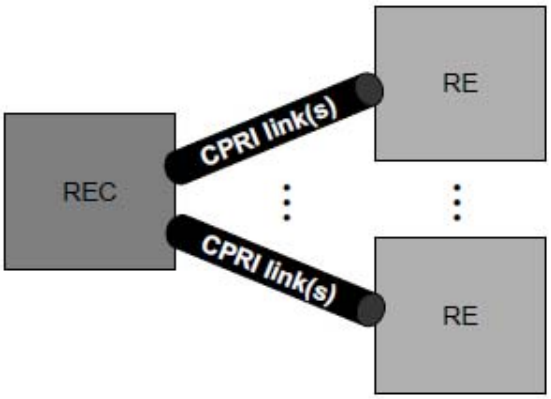

Figure 5: Multiple point-to-point links between one REC and several REs (star topology)

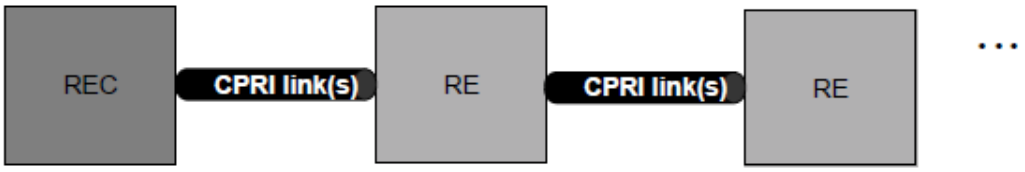

Figure 5A: Chain topology

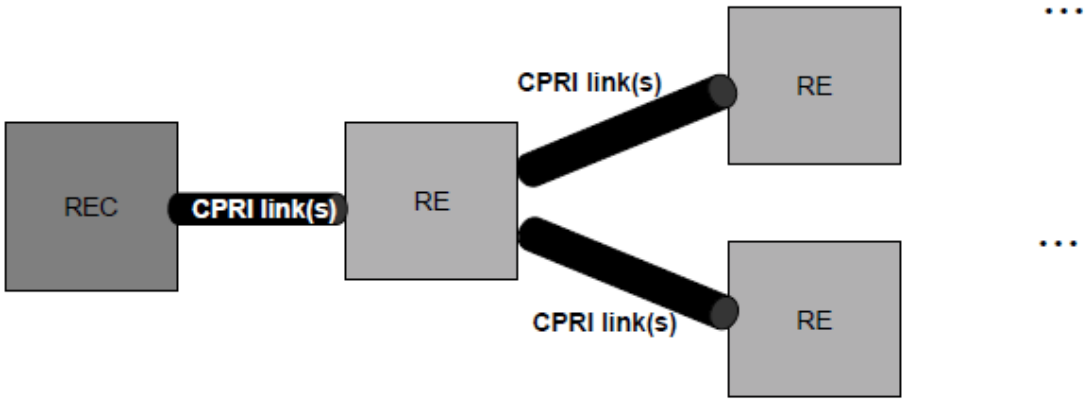

Figure 5B: Tree topology

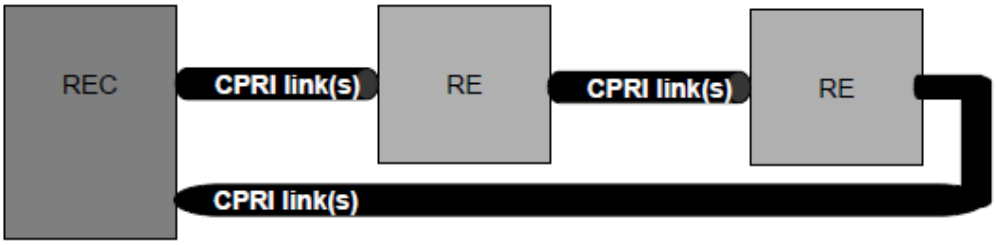

Figure 5C: Ring topology

The CPRI standard discusses using CPRI links for networking at section 6.3 "Networking (Informative)". EX-1007 83-85. Note that because this portion of the CPRI publication is marked as "Informative," it is not required but is supplied

to give "examples of the network capabilities of an REC and RE." EX-1007 83. In this section on networking, CPRI teaches that address information can be used in combination with address tables to enable an RE in a networked topology (such as tree or ring) to switch the signals it receives between multiple different output ports (i.e., the "general solution" applicable to "chain, tree or ring" topologies). *See, e.g.*, EX-1007 83:

> 6.3.1 Concepts
>
> …In the following subchapters, the RE functionality is divided into a "simple solution" aiming at using a simplified networking functionality in a chain topology as seen in figure 5A and a more "general solution" aiming at a chain, tree or ring topology as defined in chapter 2.1..
>
> An RE supporting the general solution is characterized by that it may have several slave ports and several master ports.
>
> An RE supporting the simple solution is characterized by that it only has one slave port and one master port which are both using the same line bit rate.

EX-1007 84 (emphasis added):

> 6.3.2. …SAP_{CM} logical connections received on CPRI slave port(s) are switched to CPRI master ports(s). The application layer defines **the address table used for switching**. It is managed in the REC that has full knowledge of the topology and **all addresses to all RE's**. **The HDLC or Ethernet address can be used** to define a table that maps a CPRI port to an address.
> …
> 6.3.3. …SAP_{IQ} logial connections received on CPRI slave port(s) are switched to CPRI master port(s). **An address table** managed by the application layer defines how SAP_{IQ} logical connections shall be switched from one port to another.

155. Therefore, the CPRI standard taught the use of address information, such as Ethernet addresses, to allow its REs and RECs to route different logical connections to different outputs for networking topologies. The CPRI standard teaches that the addresses would be used in combination with address tables to control the switching inputs to outputs in the REs.

156. CPRI communications are "packetized" because the CPRI standard defines a specific protocol for mapping and framing the IQ payload data into defined units of data (CPRI frames) for transmission over the CPRI link. The CPRI frames define an amount of data, and groups that data within specific locations (time slots) within the frames for sending over a CPRI link. Therefore, in my opinion, disclosure of the use of CPRI for a communication link, is a disclosure of packetizing. The basic frames, hyperframes, and 10ms frames of the CPRI standard are each examples of units of data. They are well-defined in length and content by the CPRI standard. Because Wu's system is partitioning and organizing the various flows of digital IQ samples into the CPRI framing format for transmission to the RTUs, it is creating units of data to be sent over a network, and, therefore the host unit of Wu is "packetizing" the digital representations as this term is used in the claims of the '499 patent.

157. Even if a narrower construction of "packetizing" is adopted—which requires some destination information to be included with the packet—as discussed

above the CPRI protocol discloses the use of destination addresses for more complex networked topologies. EX-1007 84 (6.3.2. and 6.3.3)("address table used for switching…addresses to all REs").

158. Claims 2, 9 and 15 are anticipated by Wu because Wu teaches to use the OBSAI standard (or alternatively the CPRI standard) between units 130, 230 and the RTUs, both of which standards define protocols that packetize IQ (baseband) representations of radio resources for transmission to remote RF units from digital baseband units, and both further teach the use of addressing to route the packets to intended remote RF antenna devices.

2. Claims 3, 10, and 15:

"wherein the digital representation of the first set of radio resources includes destination information identifying the first remote unit and the digital representation of the second set of radio resources includes destination information identifying the first remote unit"

159. Wu discloses these limitations for the same reasons given above for Claims 2, 9, 19. That is, by teaching that units 230 and the RTUs communicate the digitized downlink channel signals using either the OBSAI or the CPRI standards, Wu teaches including destination information identifying the intended remote unit. As discussed above in the discussion of claims 2, 9 and 19, both protocols teach the use of using destination addresses within the packets of data to route signals to the correct node within the network. EX-1008 at 24 (showing "Address" included

in each packet by Application layer and used by transport layer to route messages), 42-44, 48 ("The application layer is also responsible for insertion of the message header: address, type, and timestamp fields."); 77-78 (Figs. 49, 50); EX-1009 at 53 ("Addressing Principles"); EX-1007 at 84 (6.3.2. and 6.3.3)("address table used for switching…addresses to all REs"). Each OBSAI or CPRI packet (including both the packets sent at the first point in time bearing the first set of carrier channels as well as the packets sent at the second point in time bearing the second, larger set of carrier channels) will include the OBSAI or CPRI destination address to route the signal to the desired RTU.

160. Claim 15 includes very similar language to claims 3 and 10. See the chart below comparing claim 3 and 15.

'499 Claim 3	'499 Claim 15
3. The system of claim 1 wherein the digital representation of the first set of radio resources includes destination information identifying the first remote unit and the digital representation of the second set of radio resources includes destination information identifying the **first** remote unit.	15. The method of claim 14 wherein the digital representation of the first set of radio resources includes destination information identifying the first remote unit and the digital representation of the second set of radio resources includes destination information identifying the **second** remote unit.

Claim 15, however, refers (apparently in error) to "the second remote unit" which lacks antecedent basis. Independent claim 14 does not introduce, mention, or refer

to a "second" remote unit. The patentee may have meant to recite "first" instead of "second" at the end of claim 15 to match the independent claim and dependent claims 3 and 10. If so, then claim 15 is invalid for the same reasons as claims 3 and 10 as discussed above. In the alternative, if the claim is construed to require a second remote unit, the claim would still be invalid. The addressing scheme taught by Wu (e.g., OBSAI's addressing) places an address in each message packet for the intended recipient. The messages for a first RTU will include the first RTU's address, and the messages for a second RTU will include the second RTU's address. Further, Wu teaches that the same set of carrier channels can be sent to multiple RTUs, which Wu describes as a "simulcast" configuration. EX-1005 ¶0012 ("RTUs can be configured into a simulcast configuration where a host unit distributes the same carrier channels to multiple RTUs."); ¶0051. Therefore, under either interpretation, it is my opinion that Claim 15 would be invalid.

3. Claims 4, 11, 16 and 13, 18:

"wherein the first set of radio resources is a subset of the plurality of radio resources and includes at least some radio resources from the first signal source and at least some radio resources from the second signal source"

"wherein the plurality of radio resources include a first composite signal from the first signal source and a second composite signal from the second signal source, and the baseband unit is configured to form the digital representation of the first set of

radio resources from a first subset of the first composite signal and a second subset of the second composite signal.

161. Wu teaches that the signals from the multiband transceiver are composite signals as each band includes multiple carrier channels. EX-1005 ¶0011 ("Preferred frequency bands comprises more than one carrier channel per band."); ¶0035. This can be seen, for example, in Figure 2:

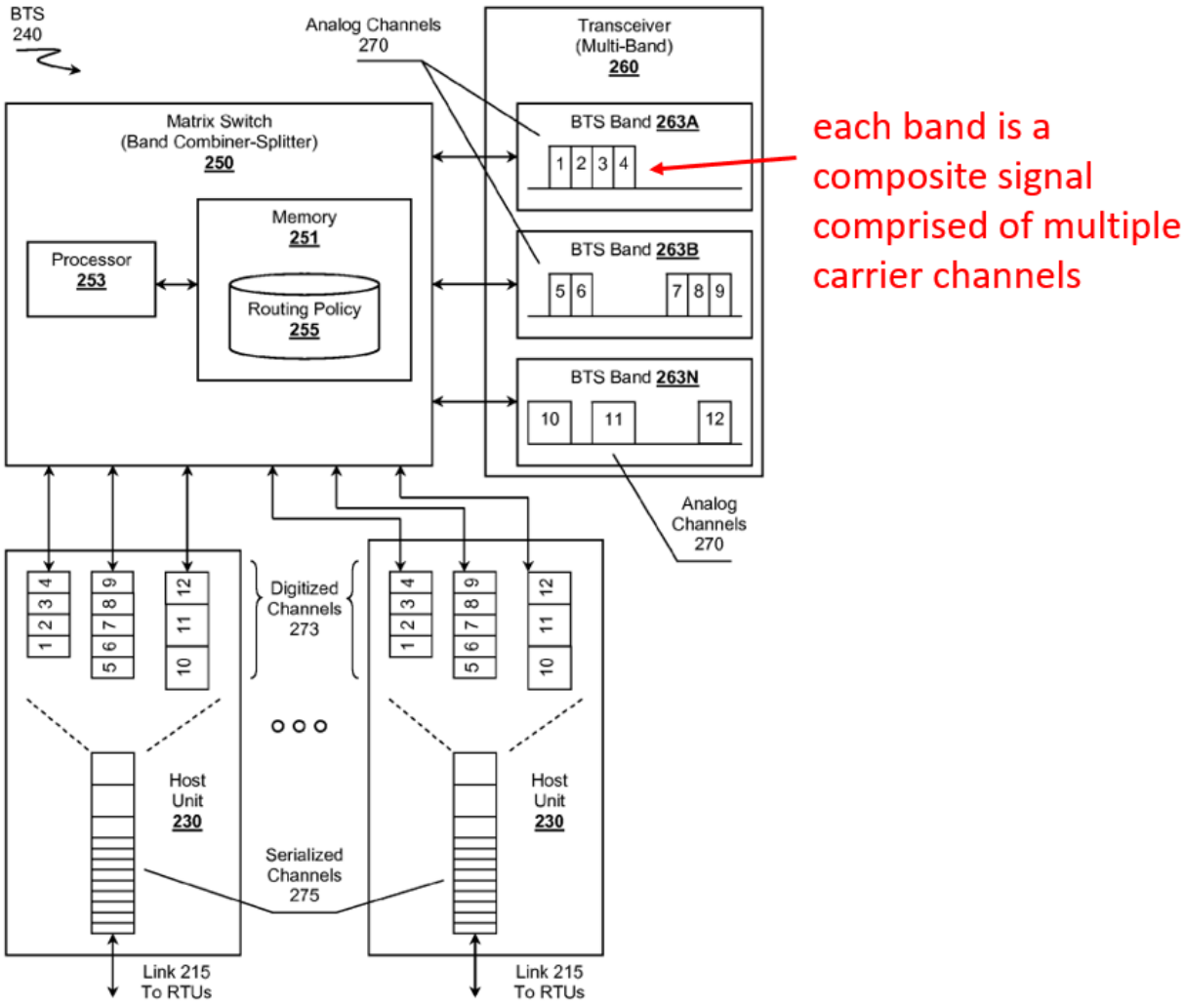

Figure 2

162. Wu teaches that the bands input to the matrix switch can come from multiple multi-band transceivers (i.e., multiple *signal sources*). EX-1005 ¶0034. Wu also teaches that the carrier channels received by the matrix switch "can be routed or allocated according to policy 255 individually, collectively as shown, *or in arbitrary groups*." EX-1005 ¶0049, ¶0047. Wu points out that this ability allows channels from different bands to be split from their bands and grouped together for routing with channels from different bands to an RTU. EX-1005 ¶0047. These teachings together, i.e., (i) that the multi-channel bands can be coming from multiple signal sources and (ii) that any individual carrier channel can be split and combined with channels from a different band, discloses to a POSITA that the radio resources sent to a remote unit can comprise some of the channels from multiple signal sources as recited in these claims.

4. Claim 5:

"wherein the baseband unit and at least one of the plurality of signal sources are part of a baseband controller."

163. Wu teaches this limitation by disclosing that the matrix switch and host units (together the *baseband unit*) can be located within the same structure as the multiband transceiver (a *signal source*). This is shown, for example, in Figs. 2 and 4 of Wu. Wu uses the term "BTS 240" to refer to all of the elements shown in Fig. 2. That same designation is provided in Fig. 4 for BTS 440, which also shows that the host units are integral to BTS 440.

164. In addition, as discussed above, the specification never uses the term "baseband controller" and never identifies any distinction between a baseband unit and a baseband controller. Nevertheless, to the extent that baseband "controller" adds any limitation beyond a baseband "unit" Wu discloses that limitation. As discussed above for claim 8, the entire goal of Wu is to enable the disclosed system (matrix switch and host units) to provide "fine grained control" over the distribution of carrier channels. EX-1005 ¶¶0009; 0039-0040. Wu's matrix switch and host units provide this control by implementing a "routing policy" that dictates where the carrier channels are distributed and used in the system.

VIII. Ground 2: Wu alone or combined with Sabat '426 renders obvious claims 1-5, 8-11, 13-16, 18-19.

A. Baseband "unit"

165. Patent Owner may argue Wu's matrix switch 250 and units 230 do not form a baseband "unit" because they are shown in Figure 2 in different "boxes." As a preliminary point, Figure 4, shows the host units 430 inside a single BTS unit and demonstrates that Wu understood the matrix switch 250 and units 230 could be part of the same unit. Figure 1 also suggests that the units 130 are physically attached to the BTS where the matrix switch is located as shown in Figure 2. Regardless, it would have been obvious based on Wu alone or in combination with Sabat '426 to place the functionality of both components (matrix switch and units 230) within a single housing or unit.

166. Combining the matrix switch and host units of Wu would be obvious based on Wu alone because placing them together would merely result in them both performing the same sequence of operations to produce the same predictable result as when separate. A POSITA would have been motivated to do so to reduce the system complexity, reduce installation costs by simplifying installation, and minimize errors in coupling separate components. A POSITA would have had a reasonable expectation of success because no new functionality is required, merely grouping Wu's disclosed components into a single unit or housing.

167. In addition, the art had already taught to combine into a single hub unit, both (a) a fully programmable electronic switch for dynamic capacity allocation to remote antenna units (like Wu's matrix switch) and (b) digital interfaces to the remote antenna units (like Wu's units 230). *See* EX-1010 ("Sabat '426") at Fig. 6, ¶¶0046-0047 (programmable switch in hub), ¶0031-0032 (hub incorporates interface for digital distribution to the digital remote radios), ¶0037 (digital interfaces to remote units).

168. It would have been obvious to apply this teaching from Sabat '426 to Wu's system for the same reasons given above. That is, a POSITA would have been motivated to use the Sabat '426 disclosure of combining into a single unit both the matrix switch and the digital transport components of Wu's DAS so as to reduce the system complexity, reduce installation costs by simplifying installation,

and also minimize errors in coupling separate components. Placing these components into one unit avoids the parts and labor cost associated with networking these components together during installation and also avoids the cost of potential human error when building out these networks. (i.e., to reduce the system complexity, reduce installation costs by simplifying installation, and minimize errors in coupling separate components).

B. Claims 4, 11, 16 and 13, 18

169. Patent Owner may attempt to argue that Wu does not expressly state that when the matrix switch receives bands from multiple transceivers (*signal sources*), the system can route some radio resources from two sources to an RTU as recited in these claims. I disagree, as set forth above, but even if not expressly disclosed by Wu, it would have been obvious based on Wu. Wu teaches the desirability of "fine grained control" over individual carriers to prevent "unnecessary congestion" on transport links in the system (e.g., links between RTUs and the host units). EX-1005 ¶0005. The system disclosed in Wu addressed this by incorporating the matrix switch that can split out only the desired channels from different bands which can then be combined and routed as an arbitrary group to an RTU. This issue and solution applies equally whether the signals are received from one or multiple transceivers and would have motivated a POSITA to

combine only the desired channels from multiple bands for routing to an RTU even when those desired channels are received from two different transceivers.

170. An additional motivation would have been to allow multiple base stations or even multiple operators to share components of the system (such as RTUs) and thereby reduce costs. It was well-known in the background art that it was advantageous to share infrastructure equipment. EX-1032 at 1:52-57 ("In order to reduce the costs associated with the development of their communication systems, multiple service providers often locate their base stations 24 at the same geographical point. The providers can then share such items as 55 antennas, antenna towers, primary power drops, land costs, and regulatory costs."); EX-1033 ¶0004 ("In addition, as wireless access infrastructures of different service providers tend to overlap more and more within smaller spaces, the ability to share common infrastructure offers cost and operational benefits to network owners and operators."), EX-1033 ¶0010 ("A more versatile DAS architecture is needed to address these and other challenges of configuring and deploying wireless access infrastructures. Accordingly, various embodiments of the present invention provide a flexible DAS that can…enable different service providers to share a common wireless access infrastructure").

IX. Ground 3: Wu and Sabat '552 render claims 6-7, 12 and 17 obvious

A. Claims 6, 12, 17:

"wherein the baseband unit further comprises at least one interface to communicatively couple the baseband unit to one or more additional baseband units."

"receiving at the baseband unit, from at least one additional baseband unit, a second plurality of radio resources."

171. Wu does not disclose that the matrix switch/unit 230 (a *baseband unit*) could be coupled to another matrix switch/unit 230 (*additional baseband unit*). In the same art, however, U.S. Patent No. 6,963,552 ("Sabat '552")(EX-1011) disclosed that central hubs (35) in a digital wireless RF distribution system can be coupled to other hubs through digital cross connects 37 so that a base station connected at one hub site can have its signal digitized and transmitted to any of the remote units coupled to any of the other hubs in the system. EX-1011 Fig. 1 (below, highlighted), Fig. 3; 6:55-61 ("as shown in FIG. 1, a base station 20 located at any hub site 30 can transmit its associated signal to any RAN Unit 50 using a digital cross-connect 37 connected between Hubs 35"). Figure 1 of Sabat '552, shows hub 35 at left can route radio resource signals from its base stations 20 not only to its own remote RAN sites but also to the RAN sites of two additional hubs by virtue of being communicatively coupled to the additional hubs via digital cross-connection.

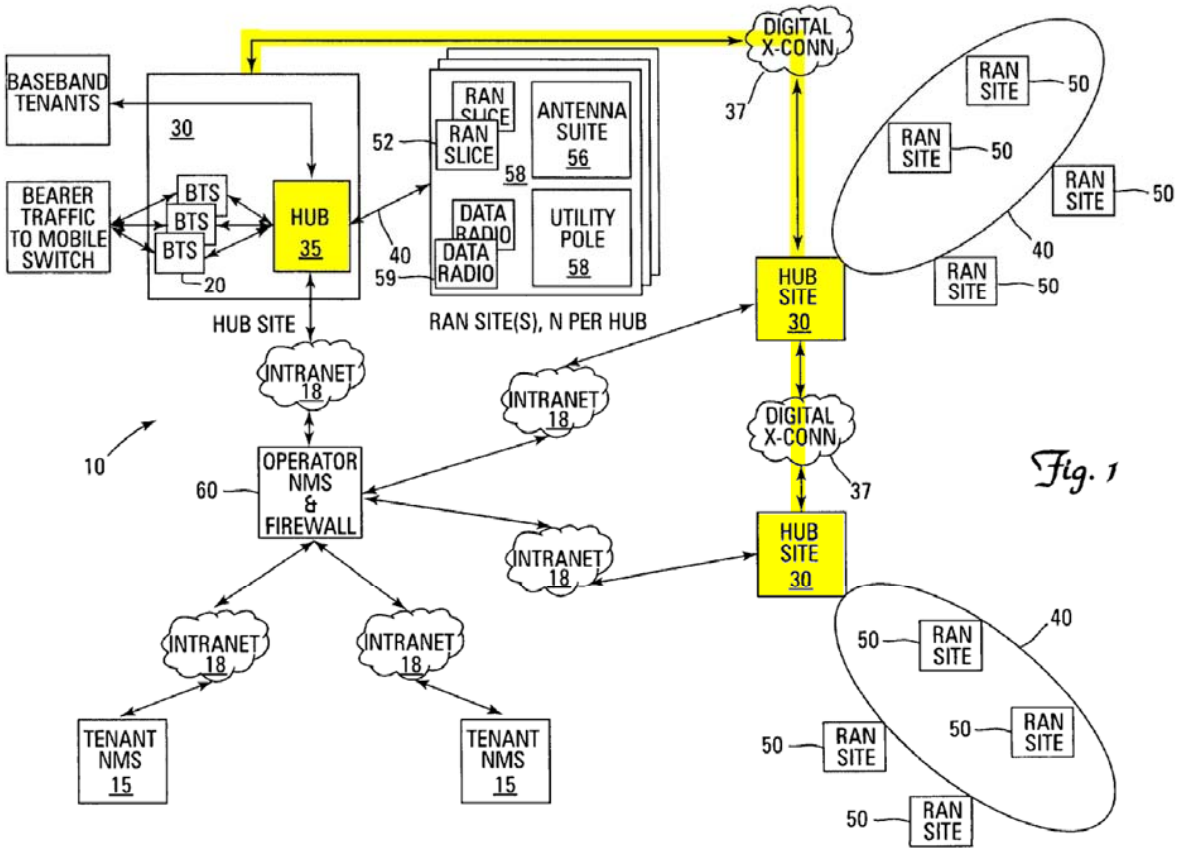

Fig. 1

172. I note that although the arrow head of the cross-connect cable shown in Fig. 1 of Sabat '552 by terminating at the "hub site" leaves ambiguous whether the cross-connect couples the base stations 20 or the hubs 35 at different hub sites, the text of Sabat '552 clarifies that it is the hubs themselves that are coupled via the digital cross-connect. Ex. 1011 at 6:58-59 ("…a digital cross-connect 37 connected between Hubs 35").

173. Sabat '552 identifies advantages resulting from interconnecting multiple hubs 35 which would have motivated an artisan to modify Wu's teaching to couple a first matrix switch/unit 230 with a second matrix switch/unit 230.

Sabat '552 teaches that interconnecting the hubs 35 enables a base station (20) located at one hub site (30) to transmit its associated signal to "any" RAN Unit 50, meaning not only any remote antenna unit directly connected to its hub 35, but also to any remote unit site coupled indirectly through another hub 35, which avoids the cost of building additional base stations and distribution networks. Sabat '552 also teaches that its design enables the system including the RAN units to be easily shared among service providers, reducing costs. EX-1011 2:48-58; 3:65-4:5.

174. Therefore, it would have been obvious to couple Wu's matrix switch/unit 230 with another matrix switch/unit 230 to allow signals input to the first matrix switch to be communicated to RTUs that connect with a different matrix switch to equipment costs and to share infrastructure among service providers. A POSITA would have had a reasonable expectation of success because the element merely requires duplicating an already disclosed structure (the matrix switch/host unit) and providing a cabled interface between them. The '499 patent does not disclose any unique or unconventional structures for connecting the DAUs (*baseband units*) but merely teaches the connection is achieved using a fiber optic cable. EX-1001 9:44-45 ("DAU 400 and DAU 405 are daisy-chained through the fiber optic cable 440."). Making fiber optic cable connections between components was well known. EX-1005, Fig. 6-1 ("E/O O/ optical converter" and fiber links), ¶0004 ("fiber optic links"), ¶0030. A POSITA would, therefore, have

a reasonable expectation of success duplicating the matrix switch/host unit (*baseband unit*) and making a fiber optic cable connection between the two.

175. My opinion is corroborated by the background prior art in the intrinsic record. EX-1001 page 2 ("citing US Patent App. Pub. No. 2007/0177552 A1). U.S. Patent Application Publication No. 2007/0177552A1 specifically disclosed that baseband units or (BBUs) in a wireless communication system can be coupled via interfaces to allow a second BBU to communicate its carrier frequencies to the remote radio units that are coupled to a first BBU. EX-1042 Fig. 8(c), 8(d), ¶¶0119-0122. This is shown, for example, in Fig. 8(c):

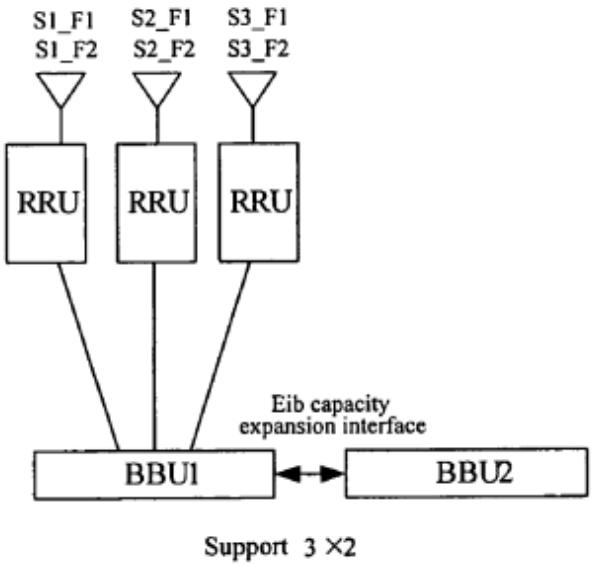

Fig.8(c)

Therefore, it was not a new idea to communicate carriers from one BBU to another to reach the other BBU's RRUs. As this reference points out, this feature can

assist in capacity expansion as well as providing backup reliability against failures. Id.

B. Claim 7:

> "**The system of claim 6 wherein the one or more additional baseband units includes a plurality of additional baseband units, and the baseband unit is connected to at least a first one of the plurality of additional baseband units through a direct connection and at least a second one of the plurality of additional baseband units through an indirect connection**."

176. The combination of Wu and Sabat '552 renders claim 7 obvious for the reasons given above regarding claim 6 and because the arrangement disclosed by Sabat '552 includes hubs that are connected to other hubs directly and to other hubs indirectly. This is seen in Fig. 1:

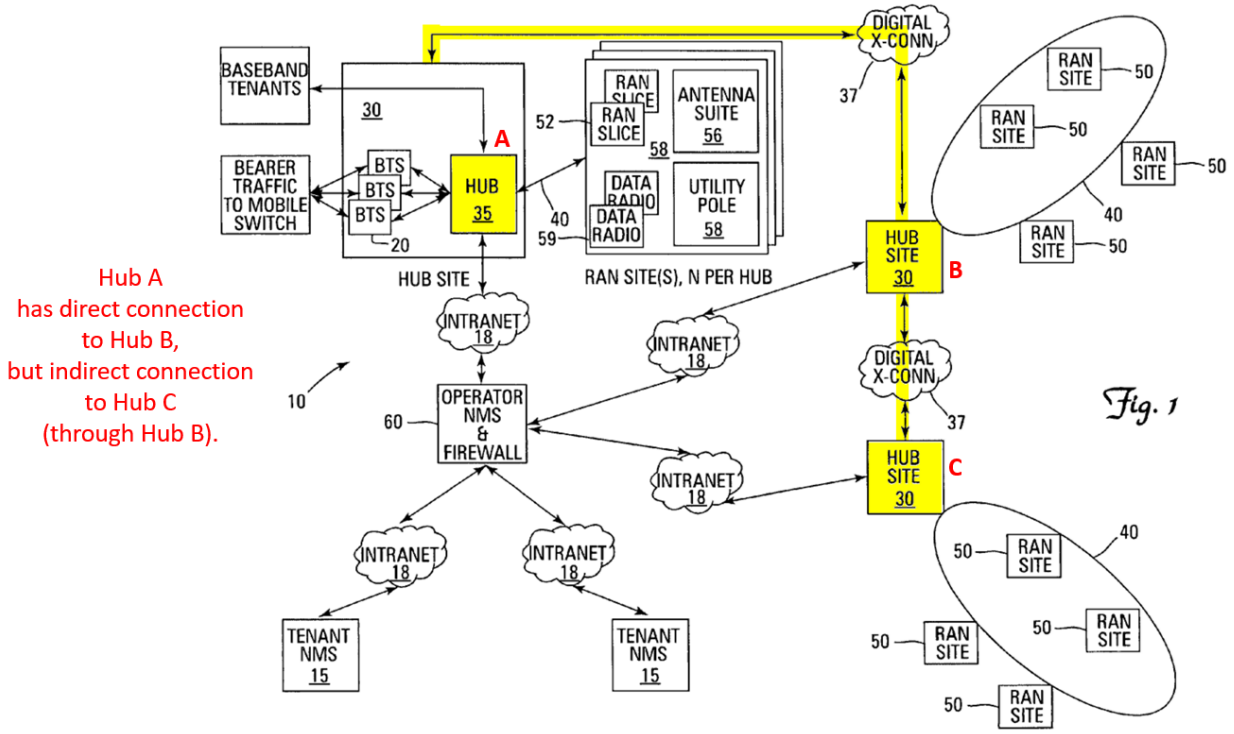

EX-1011 Fig. 1. The hub (A) at upper left in Fig. 1 has a direct connection to the upper hub at right (B), and it also has an indirect connection (i.e., via hub B) to the lower hub at right (C). EX-1011 6:55-61. A POSITA would be motivated to make this combination and have a reasonable expectation of success for the same reasons given above for claim 6.

X. Ground 4: The claims are obvious in further view of the OBSAI standard

177. All claims recite a "baseband" unit. Dependent claims 2, 9, and 19 recite "packetizing" the digital representations. Dependent claims 3, 10, and 15 recite including destination information with the digital representations. The above analysis in Grounds 1-3, finds these limitations to be taught by Wu because, for example, Wu expressly teaches to use the OBSAI standard protocol to communicate which inherently relies on packetizing (OBSAI "messages") baseband signals (I&Q samples) and which include destination addresses. Wu does not regurgitate details of the OBSAI standard. If for that reason it is argued that these claims are not anticipated by Wu, these claims are obvious for the reasons given in Grounds 1-3 in further light of the OBSAI standard (EX-1008). It would have been obvious to make the combination of Wu plus the OBSAI standard because Wu expressly teaches to use the OBSAI standard and because using a standard protocol can save time and expense of development, eliminates risk from the development process, permits the use of off-the-shelf components, and allows

communication with 3rd party equipment. EX-1005 at ¶0031, ¶¶0049-50. Further, a POSITA would have a reasonable expectation of success because the OBSAI protocol was a standardized protocol already accepted within the communications industry.

XI. Ground 5: Hettstedt anticipates claims 1-5, 8-11, 13-16, 18-19

178. The Hettstedt references anticipates claims 1-5, 8-11, 13-16, 18-19, which covers each of the independent claims and a number of the dependent claims. Hettstedt discloses each and every element of these claims.

A. Independent Claim 1

179. Hettstedt discloses each and every element of Claim 1. Therefore, Hettstedt anticipates Claim 1.

1. Element 1A

"A system for transporting wireless communications, comprising…"

180. Hettstedt discloses a "system for *wireless* cellular indoor *communications*." EX-1006 ¶0008 ("The object of the present invention is to provide a method and a system for wireless cellular indoor communications with improved cell and load balancing management."); *see also* EX-1006 ¶¶0040-0041, ¶0050. Hettstedt's title expressly refers to this: "METHOD AND SYSTEM FOR WIRELESS CELLULAR INDOOR COMMUNICATIONS." *Id.* at Title.

Hettstedt illustrates its system for transporting wireless communications in its figures. *See* EX-1006 at Figs. 2-6.

181. In the downlink, Hettstedt's system transports wireless communications to users in the coverages areas with the various indoor locations areas. These indoor locations areas (A1 and A2) shown, for example, in Figure 3:

Figure 3

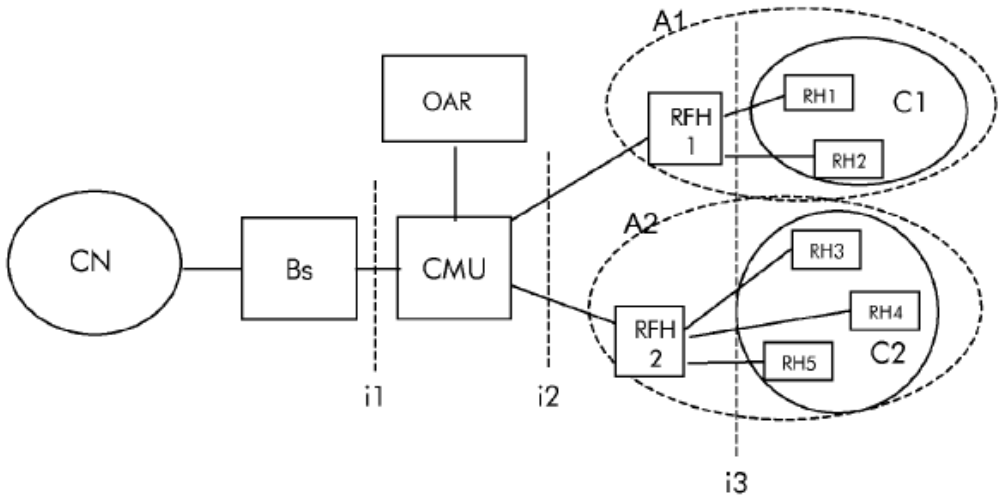

The radio heads (RH) radiate communications to the end-user devices at RF, which is a wireless. EX-1006 ¶0040. Hettstedt provides further detail at ¶0040 and ¶0050:

> [0040] In the downlink direction, communications core network signals intended for the mobile station inside the indoor environment, e.g. a building or a tunnel, are received by the base station Bs. Said signals are then passed in digital form through a first connection interface i1, e.g. an electrical or optical connection using Ethernet protocol or of other standards (e.g. OBSAI or CPRI), to the cell

> management unit CMU. The cell management unit CMU performs data packaging in downlink and forwards said digital packets through a second digital connection interface i2, e.g. an electrical or optical connection using Ethernet protocol, to the RF Hubs RFH1 and RFH2, which in turn pass the packets through a third connection interface i3, e.g. an electrical or optical connection using Ethernet protocol, to the remote radio heads RH1 to RH5.
>
> ***
>
> [0050] The remote radio heads RH1 to RH5 are RF air interfaces to users providing a digital interface to the network. They are part of the BTS according to standards, such as OBSAI or CPRI. The remote radio heads are equipped to transmit four carriers over the full RF bandwidth of each service but channel-selective at least in uplink.

Id.

182. In the uplink, Hettstedt's system transports wireless communications from users in the coverages areas back to the base station(s) (Bs) and core network (CN). EX-1006 ¶0041. Hettstedt provides further detail at ¶0041:

> [0041] Similarly, in the uplink direction, radio signals Ws transmitted by the mobile stations located in the indoor environment are received by the remote radio heads RH1 to RH5 and sent to the core network CN with data packaging in the RF Hubs.

Id. "Radio signals" are wireless signals. Hettstedt abbreviates these signals as "Ws," and the background explains this refers "wireless signals." EX-1006 ¶0004 "…wireless signal Ws").

183. Therefore, to the extent the preamble is a limitation, Hettstedt discloses it.

2. Element 1B

"a baseband unit"

184. Hettstedt's cell management unit (CMU) is *"a baseband unit*."

185. The CMU (cell management *unit*) operates by distributing "*base-band*." EX-1006 ¶0030 ("information is distributed in digital *base-band*").

186. In the downlink direction, the CMU receives signals over the i1 interface using, for example, the CPRI protocol. The CPRI standard explains that the CPRI is for the transport of "digital *baseband* signals":

> 4.1. Protocol Overview
>
> CPRI defines the layer 1 and layer 2 protocols for the transfer of user plane, C&M as well as synchronization information between REC and RE as well as between two REs[7]. The interface supports the following types of information flows:
>
> - IQ Data: User plane information in the form of in-phase and quadrature modulation data (digital baseband signals).
>
> ***
>
> **Antenna-carrier (AxC):**
>
> One antenna-carrier is the amount of digital baseband (IQ) U-plane data necessary for either reception or transmission of only one carrier at one independent antenna element.

EX-1007 at 7, 26. The prior art recognizes that CPRI refers to baseband signals. EX-1022 ¶0009 ("*Baseband digital signals* could for example be those relating to the open base station initiatives (*CPRI* and OBSAI), where the base stations are split into baseband digital and radio parts and interconnected using digital links"). The CMU then packages and forwards these signals over the i2 interface to the radio heads (RHs) as "digital *base-band*." EX-1006 ¶0030, ¶0040. Thus, the CMU is operating at baseband and manipulating baseband signal in that it is packaging the baseband signals, addressing the baseband signals, and forwarding

the baseband signals. In the uplink direction, the CMU performs the reverse sequence. *Id.* ¶0041.

187. To summarize, the CMU is a unit that, (1) receives baseband signals, (2) transmits baseband signals, (3) operates on baseband signals (e.g., by "packaging," "un-packaging," and "addressing" them and making the "the frequency allocation"). *Id.* ¶0028.

188. Here is annotation summarizing this:

Figure 3

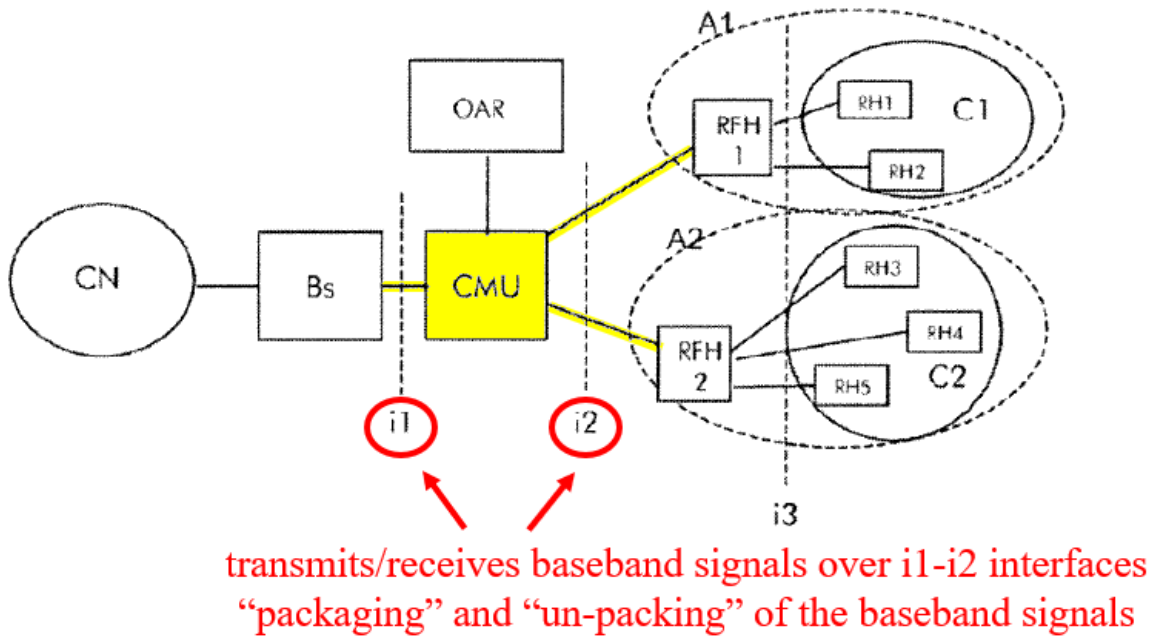

EX-1006 at Fig. 3.

189. I note that the CMU also meets the claim construction for "baseband unit" advanced by Patent Owner in district court. I understand that Patent Owner

advanced this construction: "a unit that manages baseband communications between an operator network and one or more radio remote units." EX-1020 at 10.

190. Hettstedt teaches the CMU is a *unit* that *manages* the communications that are *baseband*. EX-1006 ¶¶0028-0030 ("The cell management *unit* provides data *management* ….information is distributed in digital *base-band*"). More specifically, the CMU manages the communications between the (a) core network with operator's base station (*operator network*) and (b) remote radio heads (*remote units*):

Figure 3

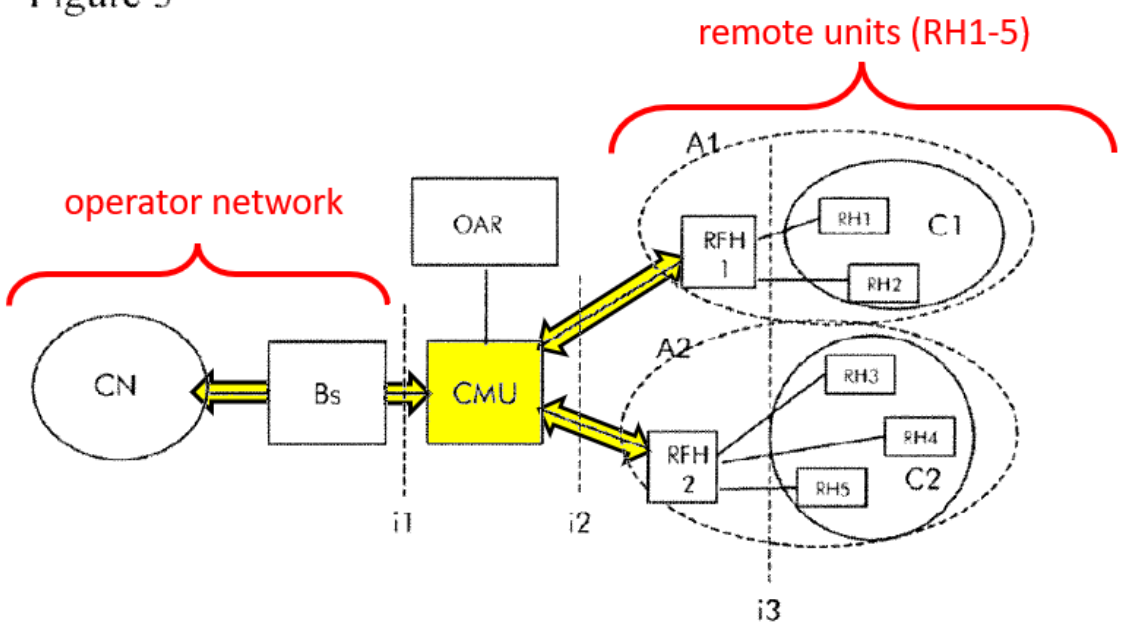

EX-1005 at Fig. 3, ¶¶0040-0041; ¶¶0043-0045, ¶0053 (explaining manages the carriers). As part of this managing, the CMU manages the base station carriers amongst the radio heads (by allocating, packaging, tuning, mapping, addressing,

shifting, de-activating, and activating). *Id.* ¶0050 ("Since frequency allocation of each carrier can be tuned remotely by the cell management unit CMU…"), ¶0028 ("Since the cell management unit performs the frequency allocation of the remote radio heads…"), ¶¶0043-0045 ("The CMU preferably comprises… mapping means from carriers or time, frequency or time-frequency allocations to individual radio heads), ¶¶0043-0044 ("The CMU preferably comprises… de-activation of un-used carriers per radio head … shifting carriers from radio heads, … activation of the shifted carriers"), ¶0028 ("The cell management unit provides data management in terms of packaging and addressing to the radio heads in downlink and un-packaging and addressing to the base stations in uplink.")

3. Element 1C

"a plurality of signal sources, including at least a first signal source and a second signal source,"

191. Hettstedt discloses a plurality of base stations (BSs), which satisfies this limitation. Figure 6 shows this:

Figure 6

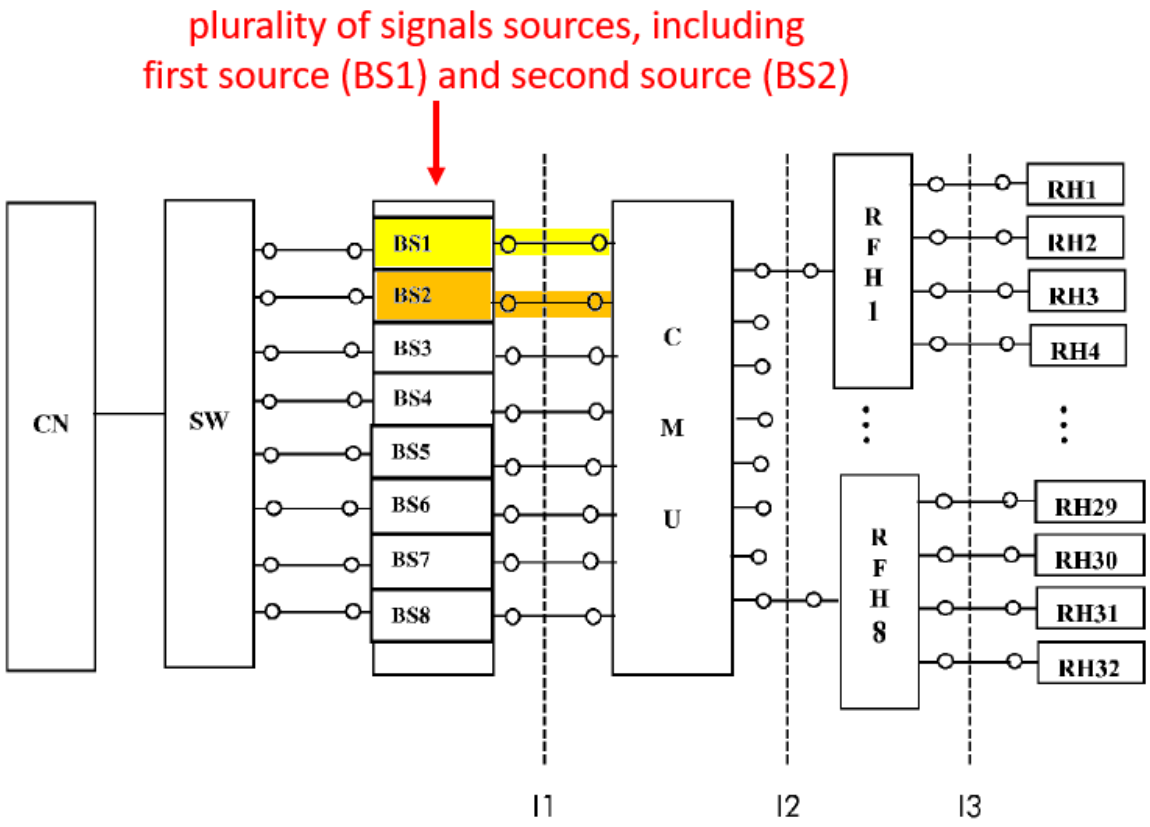

EX-1006 at Fig. 6, ¶0054 ("CMU operates on *eight base stations BS1 to BS8*."). The base stations are the "source" of the carriers. EX-1006 ¶0054 ("Each base station can provide four carriers…."), ¶0053 ("base station Bs provides the M carriers"). Hettstedt broadly teaches that that the CMU can communicate with any "number" of base stations, not just one. *Id.* ¶0027 ("cell management unit is the interface between *a number of base stations*").

192. I note that Hettstedt's disclosure closely parallels the disclosure in the '499 patent for this limitation. In the '499 patent, the disclosed plurality of signal

source for the preferred embodiment is a plurality of base stations (110A-P).

Figure 1 shows this:

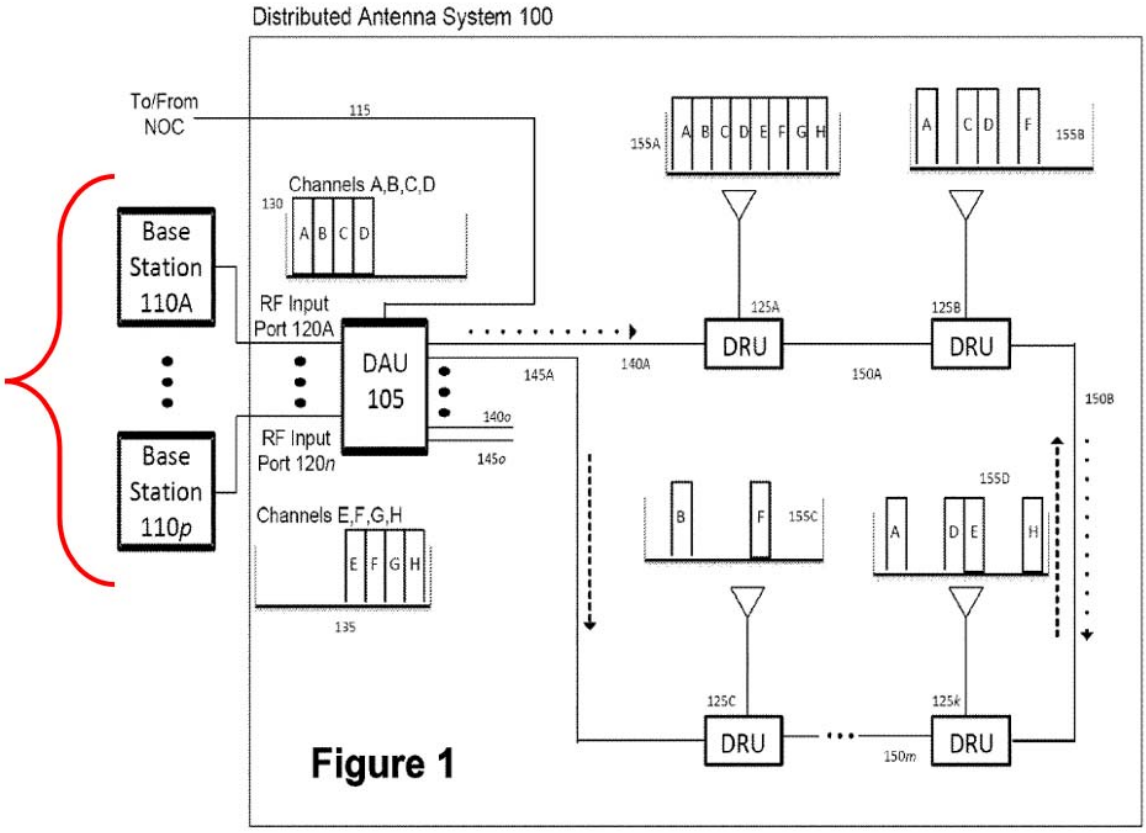

EX-1001 at Fig. 1.

4. Element 1D

"a plurality of remote units, including at least a first remote unit and a second remote unit;"

193. Hettstedt discloses a plurality of remote radio heads (RHs), which satisfies this limitation. EX-1006 ¶0039 ("remote radio heads RH1 to RH5"), ¶0050, ¶0029, Figs. 3-6. Figure 6 shows this:

Figure 6

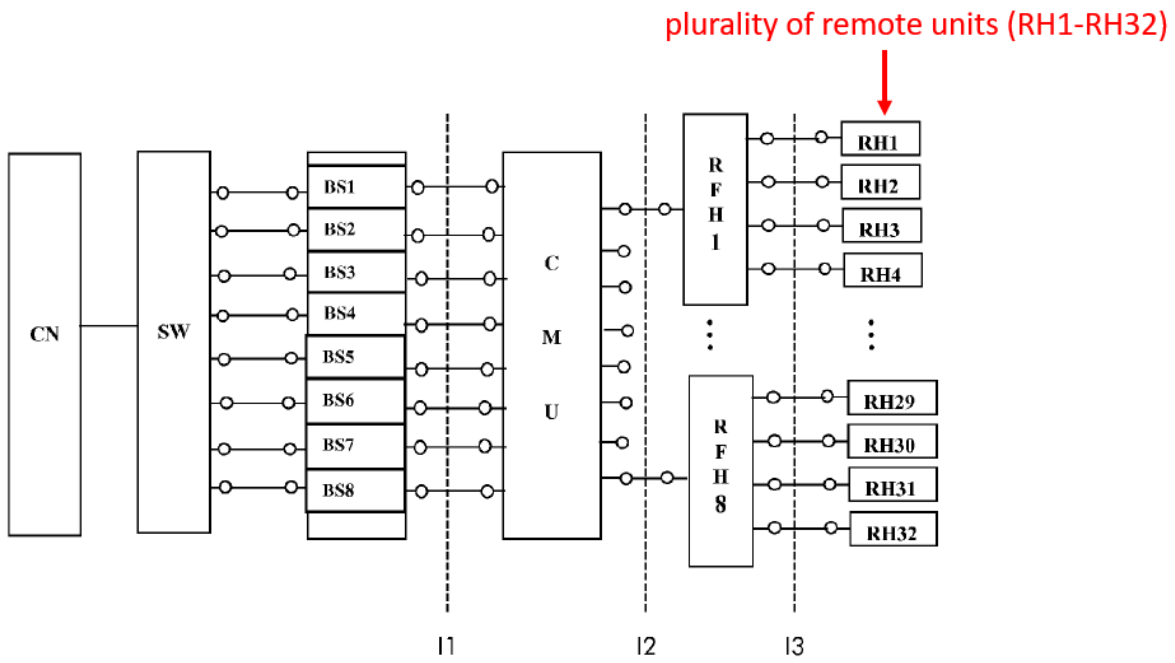

EX-1006 at Fig. 5, ¶0053. As shown, this plurality includes a first remote unit (e.g., RH1) and second remote unit (e.g., RH2). Hettstedt's other figures (e.g., Figs. 3-5) further illustrates a plurality of remote units.

5. Element 1E

"wherein the baseband unit comprises a plurality of interfaces to communicatively couple the baseband unit to the plurality of signal sources."

194. Hettstedt disclose that the CMU (the *baseband unit*) has interfaces to each of the plural base stations (the *plurality of signal sources*), which satisfies this limitation.

195. First, Figure 6 is informative. Figure 6 shows CMU (the *baseband unit*) has a separate connection to each of plural base stations (the *plurality of signal sources*):

Figure 6

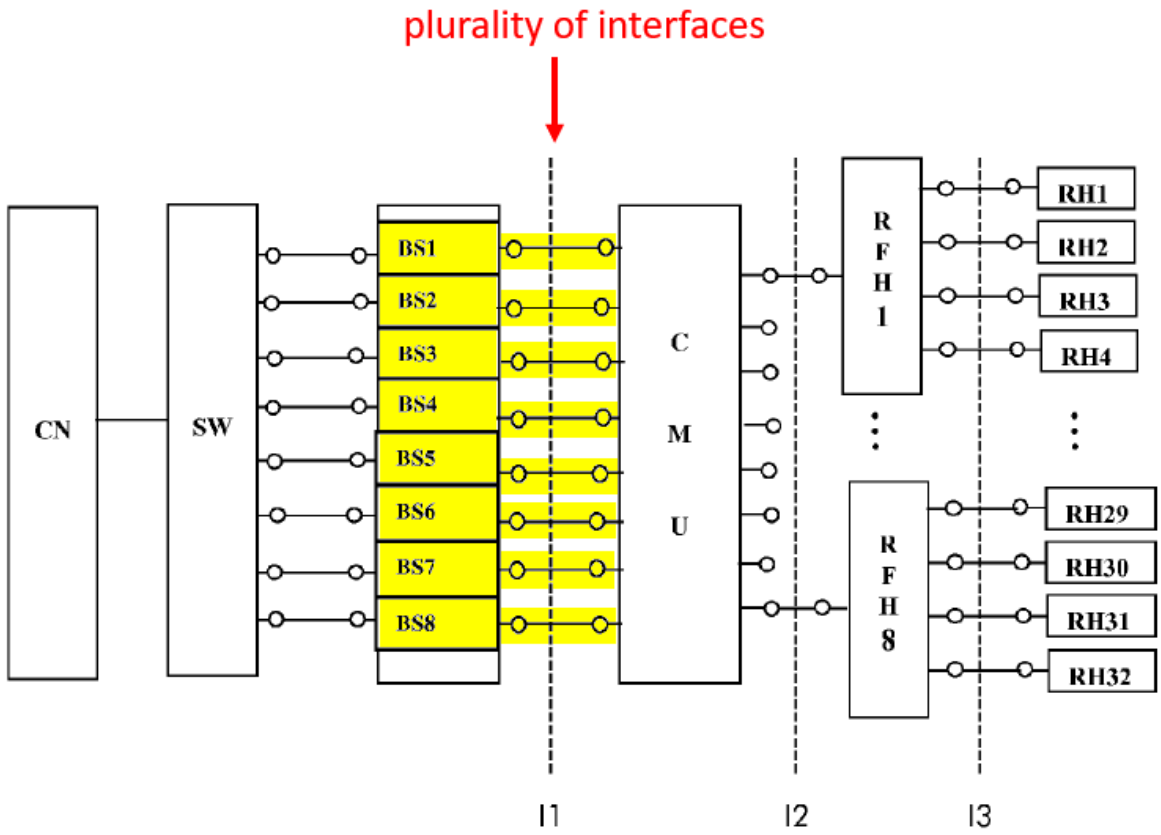

Each line (o----o) represents a digital line with a connector, i.e., a total of eight lines with connectors. EX-1006 ¶0045 ("connectors of the respective digital lines"), ¶0040 ("connection interface i1, e.g. an electrical or optical connection"). In other words, there are eight interfaces. Note that each connector line corresponds to dashed line "i1." Hettstedt expressly teaches that "i1" refers to an "interface." EX-1006 ¶0040 ("connection <u>interface</u> i1, e.g. an electrical or optical connection").

Thus, Hettstedt expressly teaches that each of the i1 connections is an interface, and Figure 6 shows there are eight such connections, i.e., eight interfaces corresponding to the claimed plurality of interfaces.[2]

196. Second, Hettstedt gives examples for the interfaces. Specifically, Hettstedt teaches that the i1 interfaces can use (1) Ethernet, (2) CPRI, or (3) OBSAI:

> In the downlink direction, communications core network signals intended for the mobile station inside the indoor environment, e.g. a building or a tunnel, are received by the base station Bs. Said signals are then passed in digital form through a first connection interface i1, e.g. an electrical or optical connection using Ethernet protocol or of other standards (e.g. OBSAI or CPRI), to the cell management unit CMU.

EX-1006 ¶0040 (emphasis added). As applied to Figure 6, for example, the eight i1 connections could be (a) eight connections each using the Ethernet protocol, (b) eight connections each using CPRI standard, (c) eight connections each using the OBSAI standard. Each of these is an example of the CMU having plurality of interfaces to communicatively couple the CMU to the plurality of signal sources.

[2] More generally, Hettstedt teaches that the CMU is the "interface between a number of base stations and the Ethernet connection." EX-1006 ¶0027. A POSITA understand the CMU has a corresponding interface for each of the "number" of base stations. Furthermore, because the base stations can cover "different services of different operators," a POSITA understands are multiple different connectors/interfaces. EX-1006 ¶0054.

Using the Ethernet protocol and CPRI and OBSAI standards, requires corresponding Ethernet interfaces, CPRI interfaces, and OBSAI interfaces.

197. By its very name, for example, CPRI expressly refers to an "interface": "Common Public Radio Interface (CPRI)." To explain further, each CPRI link involves a physical link with ports:

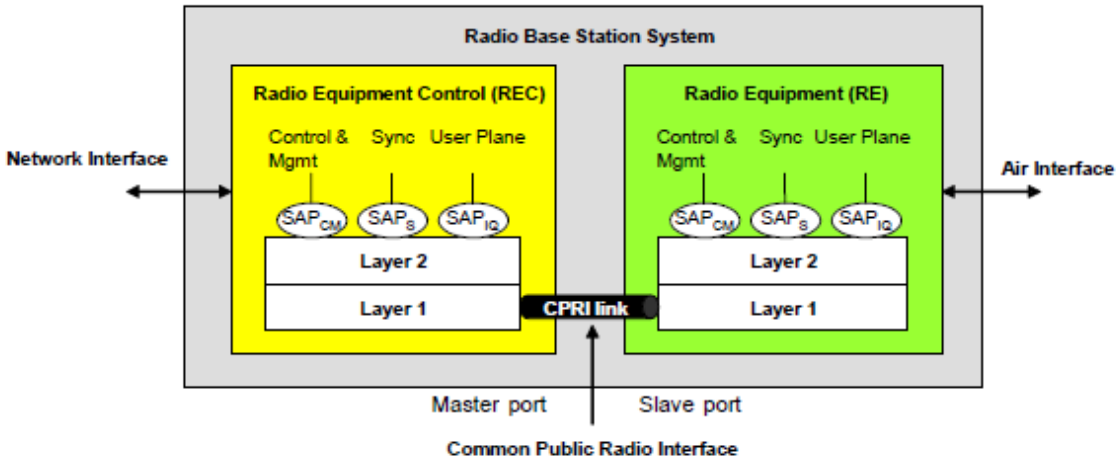

Figure 2: Basic System Architecture and Common Public Radio Interface Definition

EX-1007 at 10, 12. CPRI then provides detailed specification for the physical and data link layer of this interface. EX-1007 at 26-70. CPRI explains that these may involve optical cabling and connectors or electrical cabling and connectors. EX-1007 at 28-29. As applied to Hettstedt's Figure 6, there would be eight CPRI physical links (e.g., optical or electrical cables) with the corresponding ports (e.g., optical connectors or electrical connectors).

6. Element 1F

"wherein the baseband unit is configured to receive a plurality of radio resources from the first signal source and the second signal source"

198. Hettstedt's CMU receives a plurality of "carriers" from each of the base stations, which satisfies this limitation.

199. Figure 5 below, for example, shows that the CMU performs "carrier distribution." Ex. 1006, ¶0053. The CMU receives "M" carriers from the base station. *Id.* ¶0053 ("The base station Bs provides the M carriers Ca1 to CaM to the cell management unit CMU which in turn distributes…"). The "carriers" in Hettstedt are "radio resources." They are the resources used by Hettstedt radio heads. *Id.* ¶0050 ("The remote radio heads are equipped to transmit four carriers…") Figure 5, for example, shows this:

Figure 5

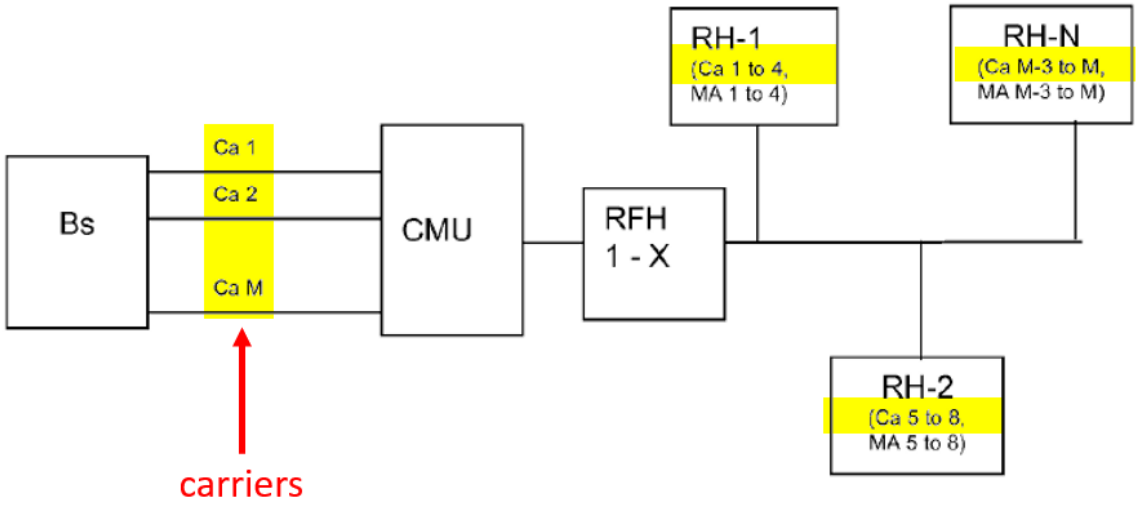

Id. Fig. 5. In other words, the carriers are the resources ultimately used by the radio heads to transmit information-bearing signals to the end user mobile devices. Modulation of the amplitude, phase, and frequency characteristics of the carriers allows the carriers to carry payload information (such as voice or data communications). The exact type of modulation used depends on the air interface protocol chosen for the system and is performed by the base station. The mobile devices can be, for example, "mobile phones" or "handheld computers." *Id*. ¶0004.

200. Figure 6 provides another example of the CMU receiving carriers from the base stations and distributing them. Specifically, the CMU receives 4 carriers from each of 8 base stations for a total of 32 carriers. *Id*. ¶0054 ("In the example of the figure the cell management unit CMU operates on eight base stations BS1 to BS8 … Each base station can provide four carriers at individual services."); *see also* Fig. 6.

201. I note that Hettstedt's disclosure closely parallels the disclosure in the '499 patent for this limitation. In the '499 patent, that DAU (*baseband unit*) receives "carriers" from a "base station." EX-1001 at 5:53-6:2. The '499 patent

teaches that RF "carriers" are "radio resources." EX-1001 at 12:6-7 ("radio resources (such as RF carriers…").[3]

202. If Patent Owner argues that receiving "radio resources" is not satisfied by merely receiving payload data, then that does not distinguish the '499 patent from Hettstedt. Hettstedt's carriers received from the base station are not merely underlying payload data. Hettstedt teaches that the carriers come from a "conventional" base station. Ex. 1006, ¶0042. A conventional base station does not provide merely payload data; rather, it modulates data onto carriers by manipulating the phase, amplitude, and frequency characteristics of the carrier in response to the data as defined by the chosen air interface protocol for the system (GSM, CDMA, LTE). It is the base station that applies the air interface protocol to impregnate carriers with the underlying payload data using the process of modulation. The modulated carrier signals can be expressed in real form or

[3] Hettstedt teaches the carriers may be received in digital form using CPRI. Ex. 1006 ¶40. Patent Owner has alleged digital CPRI signals are radio resources. Ex. 1024, Ex. B at 5-6 (PDF pages 29-30) ("The Verizon / CommScope Accused Instrumentalities satisfy this claim element. CommScope's ION-E/ERA platform includes a baseband unit that is configured to receive a plurality of radio resources from the first signal source and the second signal source. For example, CommScope's ION-E/ERA platform includes a Central Area Node ("CAN") 'located at the campus or building head-end. It digitizes baseband RF signals, combines signals from different operators and distributes them throughout a building or campus.'" *See, e.g.*, *Id*. For example, CommScope's ION-E/ERA platform includes a 'CPRI digital donor (CDD)' that 'receives CPRI digital signals from compatible operator baseband units (BBU)' *See, e.g.*, DALIVZN- 000429."

complex form. When expressed in complex form, the modulated carrier signal includes paired I and Q streams and is sometimes referred to as a baseband signal. Further, as explained in the prior paragraph, the modulation of the signals provided by the base station will be used and can be seen in the actual transmission from the remote unit (and are not merely the payload data prior to modulation).

7. Element 1G

"wherein the baseband unit is configured to send a digital representation of a first set of radio resources to the first remote unit at a first point in time, the first set of radio resources for transmission at an antenna of the first remote unit "

203. Hettstedt's discloses each part of this limitation. As an overview, Hettstedt's CMU is configured to package sets of carriers (*radio resources*) in digital form (a *digital representation*") into "digital packets" and send them to the radio heads (*remote units*), which satisfies this limitation. EX-1006 ¶0040 ("cell management unit CMU performs data packaging in downlink and forwards said digital packets through a second digital connection interface…"), Figs. 3-6. Here is a more detailed analysis.

204. *First*, Hettstedt teaches that the CMU allocates each radio head (including the recited *first remote unit*) a set of the carriers (the recited *radio resource*). Recall that CMU receives a set of "M" total carriers (e.g., 32 total carriers in Figure 6). EX-1006 ¶¶0053-0054. Each radio head is equipped, for example, to transmit four carriers. *Id.* ¶0050 ("remote radio heads are equipped to

transmit four carriers over the full RF bandwidth…"). The CMU perform the allocation of which carriers each radio head will transmit. *Id*. ¶0028 ("Since the cell management unit performs the frequency allocation of the remote radio heads, cell management for different services and operators can be achieved."). The CMU comprises the functionality to de-active, activate, and shift the individual carriers for each radio head. *Id*. ¶¶0043-0044. ("The CMU preferably comprises the following functionality… *de-activation* of un-used carriers per radio head on an individual basis…*shifting* carriers from radio heads, where these carriers are not used for radio heads with high load on their active carriers…*activation* of the shifted carriers at locations (radio heads) of high loading."). In this way, for example, the CMU can tune the allocations of carriers for each radio head, e.g., by de-activating, activating, and shifting the individual carriers. *Id*. ¶0050 ("Since frequency allocation of each carrier can be tuned remotely by the cell management unit CMU, the remote radio heads RH1 to RH5 can represent an individual cell and/or can be part of a greater cell.") The CMU "comprises" the "mapping" functionality to map the carriers "to individual radio heads, as identified e.g. through their MAC addresses or the connectors of the respective digital lines to which the radio heads are connected." *Id*. ¶0045.

205. Figure 5, for example, shows the CMU sending each radio head its own set of four carriers at a first point in time:

Figure 5

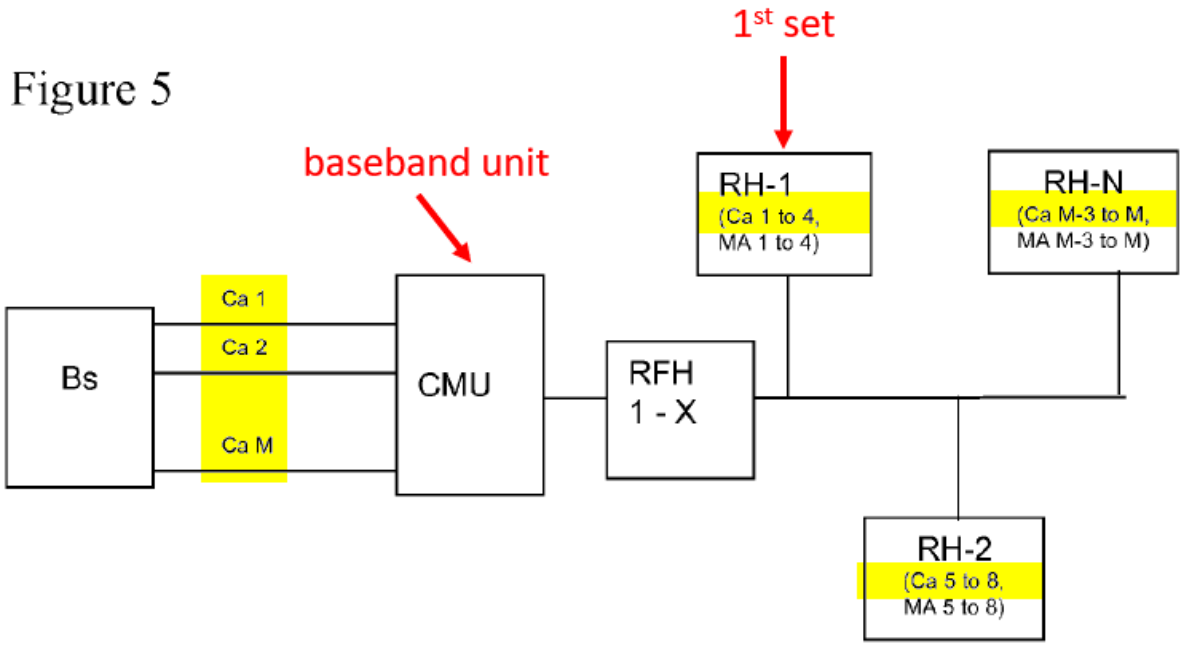

EX-1006 ¶0053 ("FIG. 5 shows an example of carrier distribution according to the wireless cellular indoor communications method of the invention considering four carriers per remote radio head RH-1 to RH-N."). Carriers 1-4 are distributed to RH-1 using MAC addresses 1-4 ("MA 1 to 4"). EX-1006 ¶0053. Carriers 5-8 are distributed to RH-2 using MAC addresses 5-8. *Id.* Any of these radio head is an example of the recited *first remote unit*. The corresponding set of carriers at that radio head (e.g., Ca1-4 at RH1) is an example of the recited *first set of radio resources*.

206. *Second*, Hettstedt teaches multiple components and functionality for configuring the CMU to send the sets of carriers to the remote units (e.g., the recited *first set* at *a first point in time*). Hettstedt teaches that the CMU "comprises" the following components and functionality:

- The "mapping" functionality to map carriers "to individual radio heads, as identified e.g. through their MAC addresses or the connectors of the respective digital lines to which the radio heads are connected" (¶0045)
- The "packaging and addressing" functoriality to package and address the "to the radio heads in downlink" (¶0028).
- An "intelligent switching unit for data distribution and cell organization configurable in size and functionality according to system dimensions" (¶0042)
- A "complex matrix function to combine different base stations with a number of RF hubs" (¶0042)

EX-1006. To unpack this, the CMU is configured to map the correct carriers to the correct radio heads according to the mapping data. EX-1005 ¶0045. The CMU is further configured to send the carriers to the correct radio head by packaging and addressing the carriers into digital packets (e.g., Ethernet packets) and using the intelligent switching unit to distribute the packets. EX-1005 ¶0028, ¶0042, ¶0053. The CMU is further configured to send the digital packets with the carriers to the radio heads via the remote hubs. EX-1005 ¶0040. After packaging and addressing the digital packets, the CMU "forwards" (i.e., sends) the packets to the hubs, which forward them to the correct radio heads. EX-1005 ¶0040 ("The cell management unit CMU performs data packaging in downlink and forwards said digital packets through a second digital connection interface i2, e.g. an electrical or optical connection using Ethernet protocol, to the RF Hubs RFH1 and RFH2, which in turn pass the packets through a third connection interface i3, e.g. an electrical or optical connection using Ethernet protocol, to the remote radio heads RH1 to

RH5.”). Figures 3 and 5, for example, show that the CMU is situation to send the packets to the radio heads via the remote hubs:

Figure 3

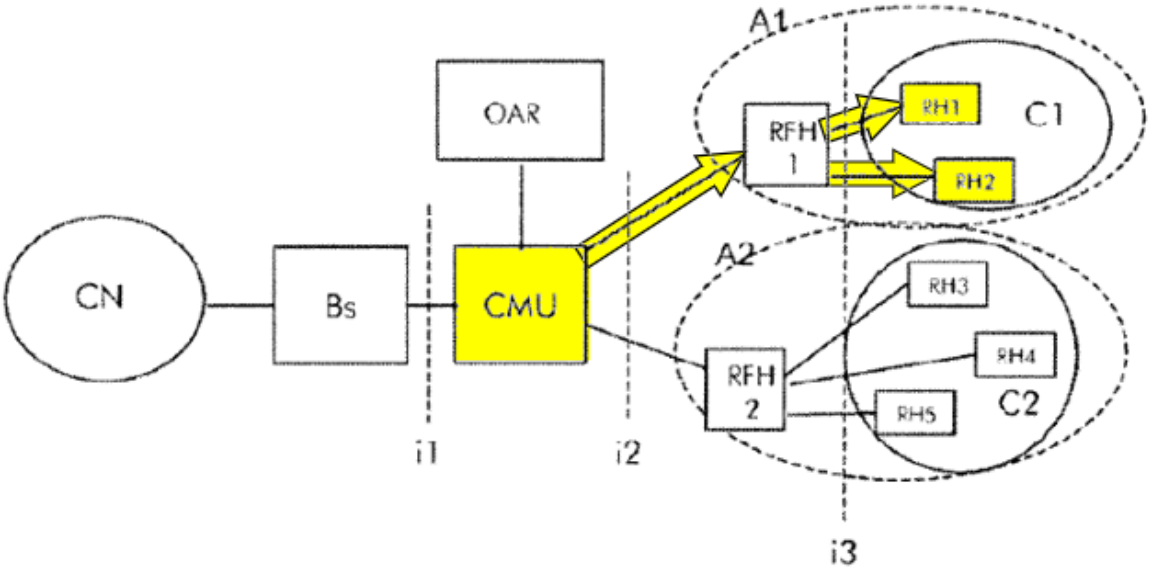

Figure 5

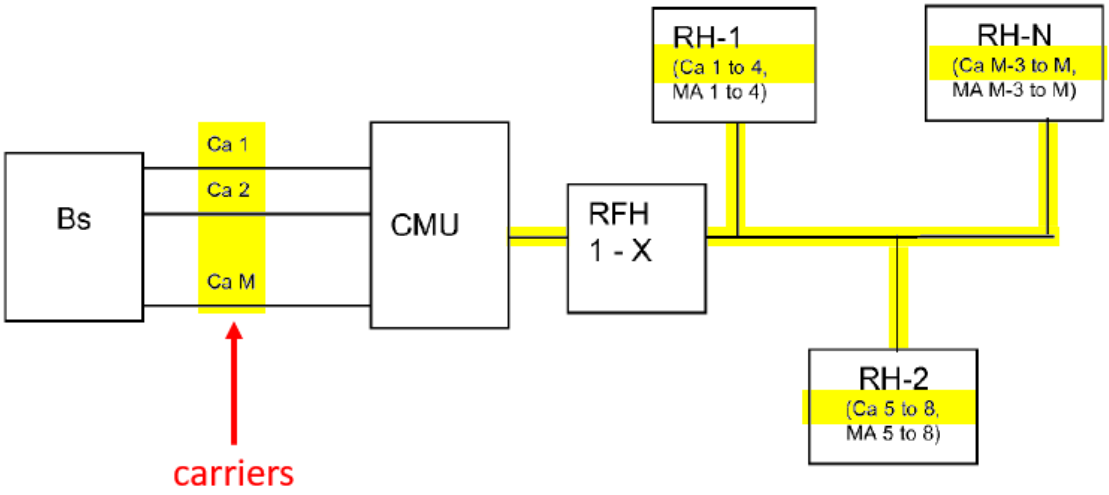

EX-1006 at Figs. 3, 5; *see also* Fig. 6. Using the intelligent switch unit, the CMU can forward the digital packets to the correct RF hub and the RF hub can use the addresses within the packets to forward the digital packets to the correct radio head. EX-1006 ¶0004. In sum, after the CMU performs the allocation of the carriers, it is now "configured" to *send a digital representation of a first set of radio resources to the first remote unit at a first point in time*.

207. I note that Hettstedt's components (e.g., an intelligent switching unit) and functionality (e.g., mapping) are well-known to POSITAs, and a POSITA knows how to implement these. As the background art explains, for example, mapping functionality includes a "data table" that maps the radio resource (e.g., Hettstedt's carriers) to the remote unit by an address (e.g., by Hettstedt's MAC addresses). EX-1026 at 8:48-60. Here is an illustration of such of mapping functionality from the background art:

DAS MAPPING DATA	
RAN COVERAGE SEGMENT(S)	DAS ANTENNA UNIT IP ADDRESS(ES)
A	xxx.xxx.xxx.1, xxx.xxx.xxx.2, xxx.xxx.xxx.3, xxx.xxx.xxx.6
B	xxx.xxx.xxx.5
C	xxx.xxx.xxx.4

FIG. 2

EX-1026 at Fig. 2. As the background art explains, for example, an intelligent switching unit includes, for example, a "programmable electronic switch." EX-1010 ¶0047. Such switches "allows any combination of inputs to be connected to any combination of outputs so that base stations can be connected to antennas in a very flexible manner." EX-1022 ¶0002. Hettstedt's mapping data and intelligent switching unit work together. As explained in the background art, for example, routing information (e.g., Hettstedt's mapping data) can be used to program (e.g., configure) a switch (e.g., Hettstedt's intelligent switching unit) how to route radio resources. *See* EX-1005 ¶0040 ("Policy 255 is considered to include programmatic instructions stored on a computer readable memory 251 that can be executed within processor 253 that configures switch 250 to properly route the channels.").

208. *Third*, Hettstedt's CMU send each radio head its sets of carriers via "digital packets" containing the carriers (radio resources) in "digital form," which is an example of sending *a digital representation of a first set of radio resources*. EX-1006 ¶0040, ¶0028, ¶0053. Hettstedt's receives the carriers from the base station in "digital form." EX-1006 ¶0040. Hettstedt's CMU then packages and address them into "digital packets" and forwards the packets (i.e., sends the packets) over the i2 "digital connection interface." *Id.* Hettstedt's teaches a specific example of a digital packet (an Ethernet packet) and the digital interface (an interface for the Ethernet protocol). EX-1006 ¶0053, ¶0040. Here is summary annotation:

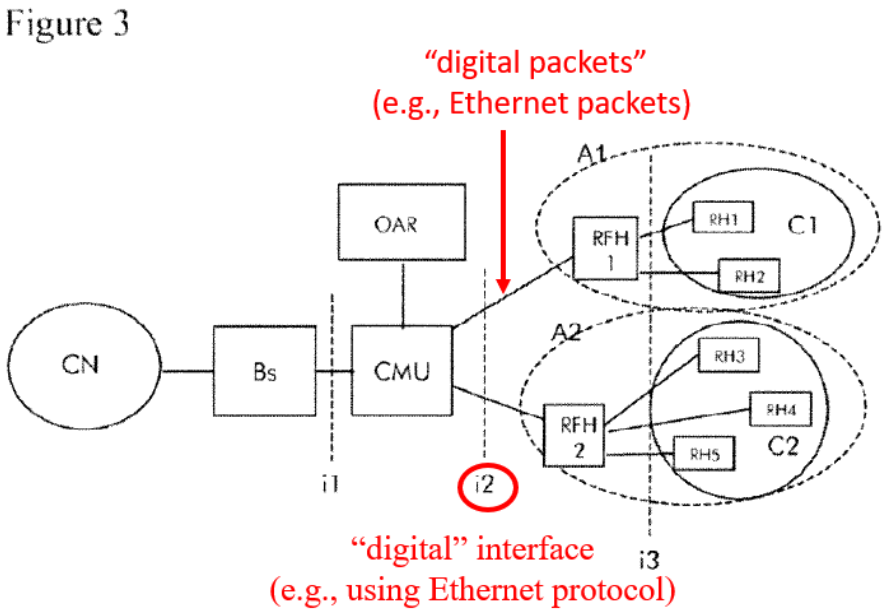

EX-1006 at Fig. 3; *see also* Figs. 5-6.

209. *Fourth*, the sets of carriers are "*for transmission at an antenna of the first remote unit.*" Hettstedt teaches that the remote radio heads are the "RF air interfaces to users" (¶0050) and are "equipped to transmit four carriers over the full RF bandwidth" (¶0050) and receive "radio signals Ws transmitted by the mobile stations" (¶0041).[4] In other words, Hettstedt's remote radio heads transmit and receive the carriers over the air (i.e., wirelessly) using radio frequencies signals (i.e., RF signals) to the user's mobile stations (e.g., cell phones). A POSITA understands that this inherently involves an antenna; thus, a POSITA understands that the carriers are transmitted at an antenna of the first remote unit. The antenna is the structure that radiates the carriers over the air. Because the remote radio heads are the "air interface" that transmit/receive wireless radio signals, a POSITA understands that the radio heads must use an antenna.

210. The background art corroborates that antennas are the structure to wirelessly transmit signals to mobile users (as taught by Hettstedt). EX-1022 ¶¶0019-0020 ("In the case of wireless links, connection to the antennas is made using remote units 10. The antennas transmit and receive signals to and from mobile units or devices such as, without limitation, cellular telephone and PDAs….For example, in the case of wireless links, a remote unit 10 functions to

[4] Hettstedt gives the specific example that the mobile stations are "mobile phones." EX-1006 ¶0004 ("mobile stations Ms, e.g. mobile phones").

convert the transmitted signal to the appropriate form (frequency, power, etc.) for radiation from the antenna 6 to mobile unit 50."); EX-1030 at 17:49-54 ("Downlink data is received from the NAN, extracted from the internal protocol format, then converted to an analog 50 signal, up-converted in frequency, and finally amplified and transmitted out the antennas. In the uplink direction, signals are received from the mobiles via the antennas, then down-converted, digitized, formatted into the internal protocol…"); EX-1031 at 3:2-5 ("The remote units function to transmit/receive transmissions from the host unit and transmit/receive wireless signals over accompanying antenna to mobile costumers."); EX-1036 ¶0018 ("As described more fully below, the signals are then processed, converted to RF format and played out to the power amplifier and broadcast over the air via the antenna(s) to a recipient end mobile user.")

211. The background art further corroborates that radio heads uses antenna. EX-1035 at 8:59-61 (describing for the radio head: "The resulting output signal is transmitted over antenna 206 to the mobile terminal. Antenna 206 also receives signals sent to the agile radio head 12 from the mobile terminal."); EX-1036 ¶0018 ("Each RRH 211-216 has, illustratively, network interface equipment, timing and frequency synchronization equipment, signal processing elements, a power amplifier and one or more antennas.").

212. One particaulr relevant example is background reference U.S. Patent Publication No. 2005/0157675 (Feder, EX-1036). Hettstedt specifically identifies this reference in its own background. EX-1006 ¶0006 ("Another known indoor communications system providing wireless cellular service is shown in FIG. 2….An example of such system is disclosed in Patent Application US 2005/0157675 A1."). This background reference specifically teaches that (a) radio heads have antennas and (b) antennas are the structure to wirelessly transmit signals to mobile users (as taught by Hettstedt). EX-1036 ¶0018 ("Each RRH 211-216 has, illustratively, network interface equipment, timing and frequency synchronization equipment, signal processing elements, a power amplifier <u>and one or more antennas</u>.…As described more fully below, the signals are then processed, converted to RF format and played out to the power amplifier and <u>broadcast over the air via the antenna(s) to a recipient end mobile user</u>.") Hettstedt shows (a) the background reference with radio heads Figure 2 and (b) Hettstedt system with radio heads in Figure 3. Hettstedt identically illustrates the radio heads as boxes "RH." *Compare* EX-1006 at Fig. 2 *with* Fig. 3. The background reference explains that the boxes representing the radio heads (211-216) further each comprises an antenna (217):

FIG. 2

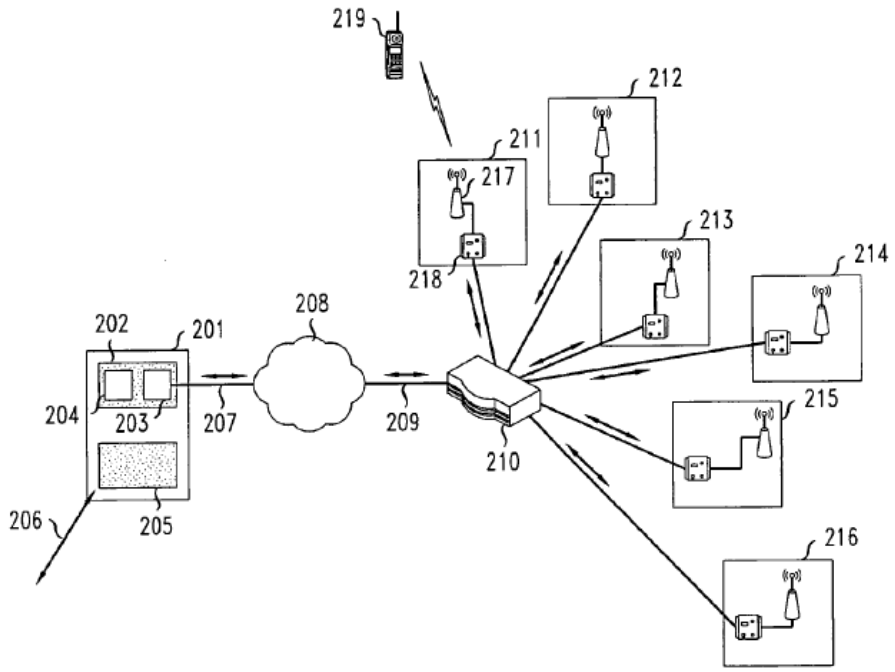

EX-1036 Fig 2, ¶¶0017-0018 ("remote radio heads (RRHs), such as RRHs 211, 212, 213, 214, 215 and 216… Each RRH 211-216 has, illustratively, … one or more antennas. …the signals are then processed, converted to RF format and played out to the power amplifier and broadcast over the air via the antenna(s) to a recipient end mobile user.").

213. The provisional patent application for the '499 patent also corroborates that radio heads uses antenna. The provisional patent application the explains that the "RRU concept" (remote radio head unit) involves, for example, multiple "antennas":

FIELD OF THE INVENTION

10 The present invention generally relates to wireless communication systems using power amplifiers and remote radio head units (RRU or RRH). More specifically, the present invention relates to RRU which are part of a distributed base station in which all radio-related functions are contained in a small single unit that can be deployed in a location remote from the main unit.

***

The RRU concept is a fundamental part of a state-of-the-art base station architecture. 2G/3G/4G base stations are typically connected to RRUs over optical fibers. Either CPRI, OBSAI or IR Interfaces may be used to carry data to the RRH to cover a three-sector cell. The RRU incorporates a large number of digital interfacing and processing functions. Traditionally, a multi-channel RRU means that multiple antennas are used, typically with two power amplifiers for two distinct bands. A duplexer is used to combine the two power amplifier outputs. Switches

EX-1021 at A458-459.

214. I further note that Patent Owner has acknowledged that Hettstedt discloses a "DAS," which concedes that Hettstedt systems is for transmission at an antenna because DAS stands for "distributed antenna system." EX-1027 at 10 ("To effectuate load balancing at the headend of the DAS, *i.e.*, the CMU, referring to FIG. 5 (reproduced below), *Hettstedt* teaches that the CMU distributes carriers, *e.g.*, four carriers per remote radio head RH-1 to RH-N using their MAC addresses.").

215. I further note that the '499 patent teaches that the recited remote units is used "interchangeably" with a "Remote Radio Head Unit"—i.e., the same type of remote unit as Hettstedt. EX1001 at 4:44-47.

216. Finally, I note that Hettstedt meets the construction proposed by Patent Owner in a prior IPR. In a prior IPR, Patent Owner proposed the following construction:

Term	Patent Owner's Construction
baseband unit is configured to send a digital representation of a [first/second] set of radio resources	baseband unit allocates radio resources for communication of digital baseband data

First, as explained above, the CMU (the *baseband unit*) "allocates" the carriers (radio resources) as recited in Patent Owner's proposed construction. Hettstedt expressly teaches that the CMU performs the "allocation." EX-1006 ¶0028. ("Since the cell management unit performs the frequency *allocation* of the remote radio heads, cell management for different services and operators can be achieved."). Hettstedt gives a specific example of the CMU allocating the carriers in Figure 5. EX-1006 Fig. 5, ¶0053. Hettstedt further teaches that the CMU allocates the carriers by (a) "mapping" the carriers "to individual radio heads" (¶0045), (b) "packaging and addressing" the carrier "to the radio heads" (¶0028, ¶0053), (c) performing the "load balancing," including the de-activation, shifting and activation the carriers at and between the radio heads (¶¶0043-0044). Second, Hettstedt carriers (the *radio resources*) are "for communication of digital baseband

data" as recited in Patent Owner's proposed construction. As explained above, Hettstedt expressly teaches that "information is distributed in digital base-band" in its system. *Id.* ¶0030. Hettstedt gives a specific example where the CMU allocates carriers for communication of digital baseband data. Specifically, Hettstedt teaches that the base stations provide the carriers to the CMU using the CPRI protocol. *Id.* ¶0040. As explained above, the CPRI protocol provides "digital baseband signals" carrying "digital baseband (IQ) U-plan data" (that has been modulated). EX-1007 at 7, 26. As already explained, the CMU then allocates, packages, addresses, and distributes these carriers with digital baseband data to the radio heads. EX-1006 ¶0028, ¶0040, ¶0053.

8. Element 1H

"wherein the baseband unit is configured to send a digital representation of a second set of radio resources to the first remote unit at a second point in time, the second set of radio resources for transmission at the antenna of the first remote unit"

217. Hettstedt teaches this limitation for the same reason as the prior limitation plus Hettstedt teaching that the CMU is configured to perform (1) de-activation or (2) activation carriers at each radio head as part of load balancing. EX-1006 ¶¶0043-0045, ¶¶0028-0029.

218. The CMU performs "load balancing" by "adaptive cell **re**configuration." EX-1006 ¶0044. Specifically, the CMU comprises the means for (1) "de-activation" of un-used carriers, (2) "shifting" these carriers "from radio

where these carriers are not used for radio heads with high load on their active carriers," and (3) "activation of the shifted carriers" at radio heads of "high loading." EX-1006 ¶0044, ¶0029. The actions of de-activating, shifting, and activating carrier changes the set of carriers at the radio heads (and result in the recited *"second set"*).

219. I will use the example in Fig. 5 to illustrate the point. Figure 5 illustrates one exemplary configuration, which can be reconfigured. As shown above, the starting configuration at RH-1 can be considered the "first set"

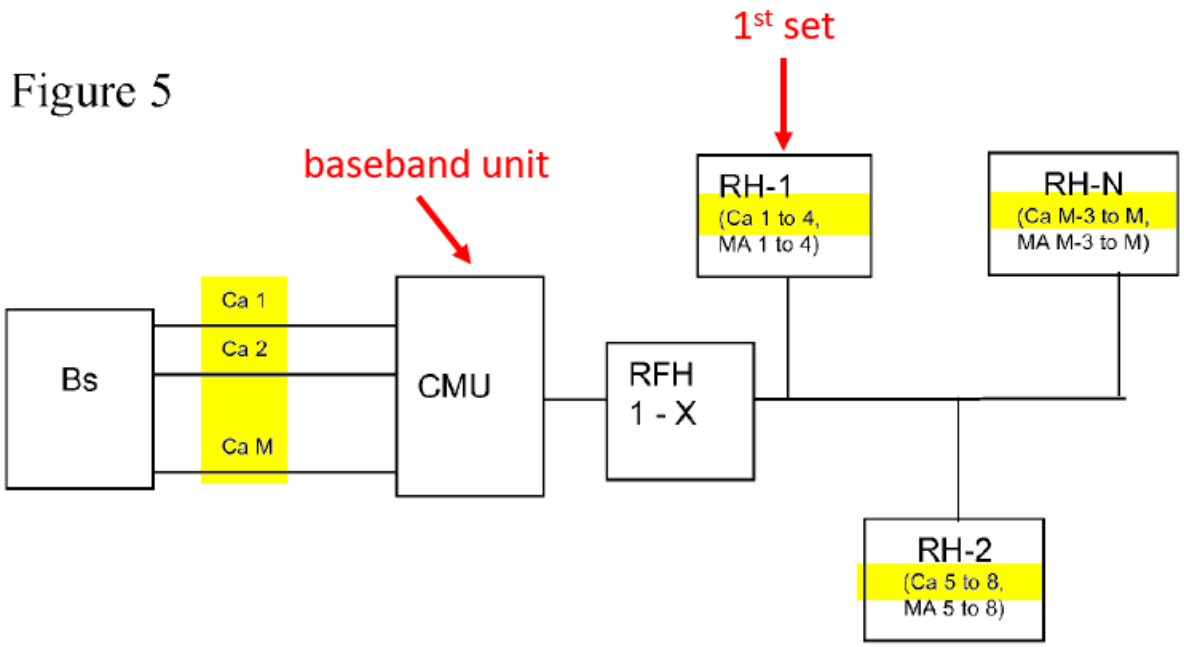

Now apply Hettstedt's teachings about load balancing. When the load is low on a carrier at RH-1, Hettstedt teaches to de-activate the carrier (e.g., carrier 4), which results in a *second set* (Carriers 1-3 compared to the first set of Carriers 1-4). EX-1006 ¶0029, ¶0044.

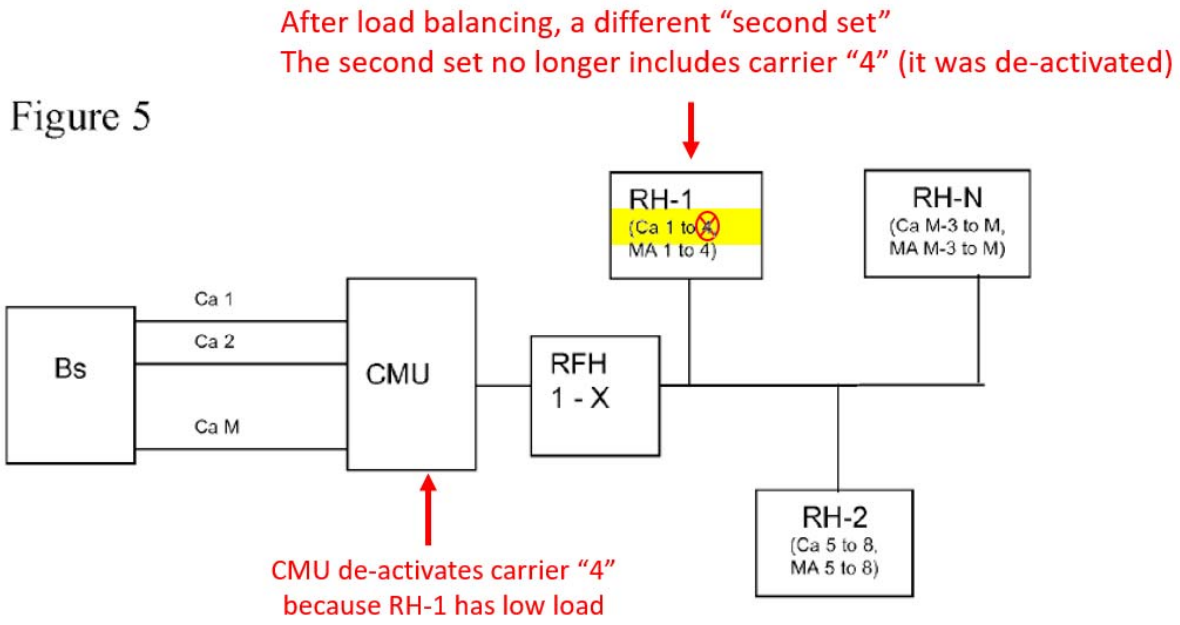

When the load is high on a carrier at RH-1, Hettstedt teaches to de-activate a carrier at a different low traffic RRH (e.g., Carrier 5 at RRH2) and shift that carrier to RRH1 and activate it, which results in a *second set* (Carriers 1-5 compared to the first set of Carriers 1-4). *Id.*

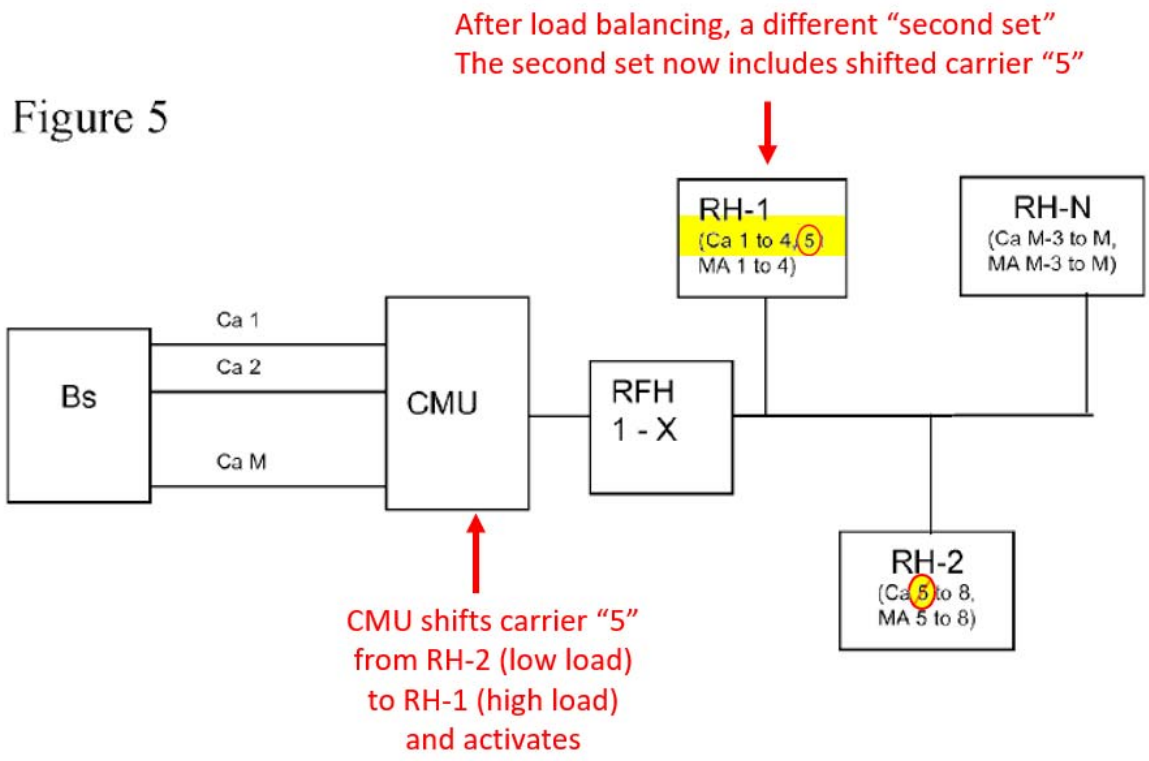

EX-1006 at Fig. 5 (annotated).

220. To be clear, the fact that each radio head has four carriers active in the first set is merely an "example." EX-1006 ¶0053. As the load balancing continues, the RH-1 could equally have only 2 carriers active in the first set, e.g., because of two prior de-activations such as where the prior load balanacing involved de-activating carrier 4 and then further de-activating carrier 3. Thus, the CMU would only send RH-1 a first set comprising two carriers (carriers 1 and 2). At a subsquent point in time as the load balancing continues, the CMU could de-activate another carrier (e.g., carrier 2) because RH-1 continues to be a low load radio head. Now, the CMU would only send RH-1 a second set comprising one

carriers (carrier 1). Or, the CMU could activate another carrier (e.g., carrier 3) because RH-1 is now a high load radio head. Now, the CMU would send RH-1 a second set comprising three carriers (carrier 1, 2, 3).

221. In each of these examples, as the load balanacing process continues over time, CMU sends the remote unit a different first and second set of radio resoruces. The "point in time" *before each instance of load balancing* at a radio head can be considered the recited "first" point in time, and the "point in time" *after each instance of load balancing* at the same radio head can be considered the recited "second" point in time. Corresponingly, the sets of carriers at that radio head before and after the load balancing can be considered the recited "first" and "second" set of radio resources.

222. After the load balancing (and the de-activating, shifting, and activating of the carriers), the CMU is now configured to send the second set of carriers to the radio head. As explained in the prior limitation, Hettstedt teaches multiple components and functionality for configuring the CMU to send the recited first and second set. I incorporate my earlier analysis. In brief, as explained in the prior limitation, Hettstedt teaches that the CMU "comprises" the following components and functionality for configuring the CMU to send the recited first and second set:

- The "mapping" functionality to map carriers "to individual radio heads, as identified e.g. through their MAC addresses or the connectors of the respective digital lines to which the radio heads are connected" (¶0045)
- An "intelligent switching unit for data distribution and cell organization configurable in size and functionality according to system dimensions" (¶0042)
- The "packaging and addressing" functoriality to package and address the "to the radio heads in downlink" ((¶0028).
- A "complex matrix function to combine different base stations with a number of RF hubs" (¶0042)

EX-1006.

223. Hettstedt's second sets of carriers are "for transmission at an antenna of the first remote unit" for the same reasons identified in the prior limitation.

224. Finally, again, I note that Hettstedt's disclosure closely parallels the '499 patent. The '499 patent teaches to changes the assignment of radio resources (the *sets*) in response to the load. EX-1001 at 12:50-64. Similarity, Hettstedt teaches to identify the "load" on "each carrier on each of the radio heads" and then perform "load balancing" by shifting carriers. EX-1006 ¶0044. I further note that Hettstedt and '499 teach the same example of when this load balancing is necessary: when users gather in one place inside a building (forming a hot-spot). *Compare* EX1001 at 6:27-30 ("A possible application for DRU125A is a cafeteria in an enterprise building during the lunch hour where a large number of wireless subscribers are gathered.") *with* EX-1006 ¶0029 ("In this way, capacity can follow

moving users in complex buildings, such as airports, stations, etc., with dynamic distribution of hot-spots.”).

9. Element 1I

“wherein a number of radio resources in the first set of radio resources is different from a number of radio resources in the second set of radio resources”

225. As explained in the prior limitation, CMU can (1) de-activate a carrier (*radio resource*) at a radio head when its load is low or (2) activate another carrier (*radio resource*) at the radio head with its load is high, which discloses this limitation.

226. When a carrier is de-activated or activated at a radio head, the “number” of radio carriers in the set before the change (the *first set*) becomes different form the number in the set after the change (the *second set*)—deactivating reduces the number and activating increase the number.

227. I will use the example in Fig. 5 again. The “first set” at RH-1 before any load balancing has four carriers (1-4). EX-1006 ¶0053. When the load is low on a carrier at RRH1, Hettstedt teaches to de-activate the carrier (e.g., carrier 4). The first set before the change had four total carriers (1-4) and the second set after the change had three total carriers (1-3):

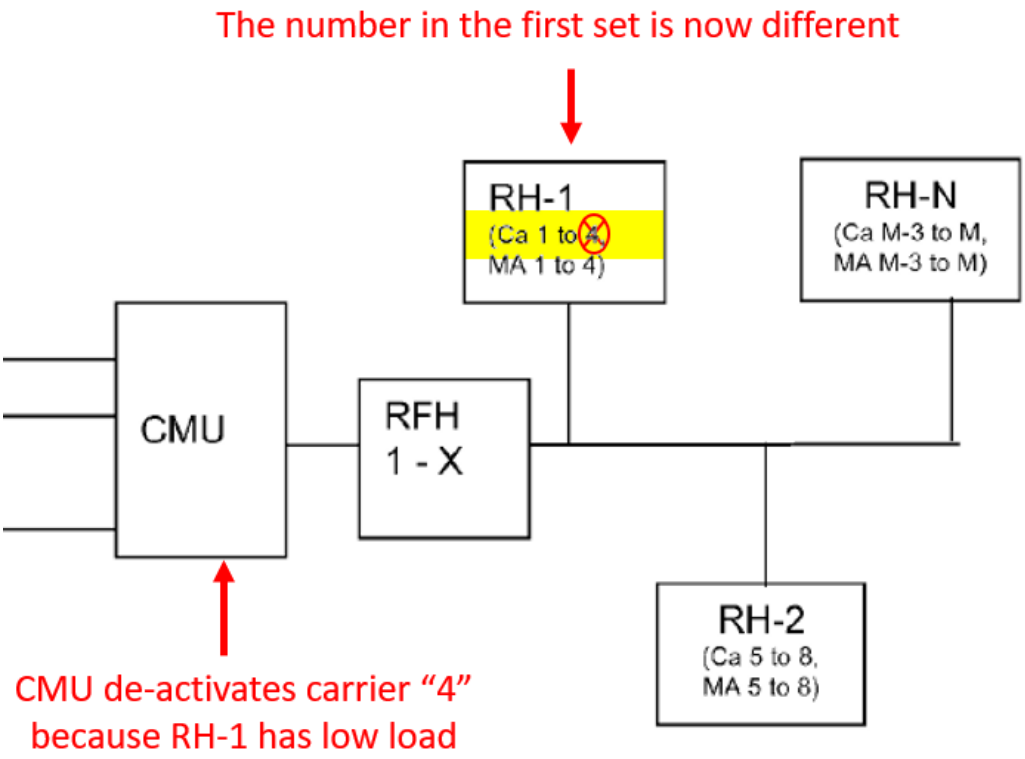

EX-1006 at Fig. 6 (annotated).

228. As mentioned above, the fact that each radio heads has four carriers active is merely an "example." EX-1006 ¶0053. The RH-1 could equally have only 2 carriers active (because of prior de-activations), and the CMU could (a) change the total number of carriers at RH-1 to 1 (by de-activiting another carrier) or (b) change the total number of carriers at RH-1 to 3 (by an activating another carrier). In all these examples, the number of carriers before the change (the *first set*) is different from the number of carriers after the change (the *second set*).

10. Element 1J

"wherein the baseband unit is configured to receive digital signals from each of the plurality of remote units."

229. Hettstedt's systems also operates in the "uplink" direction. EX-1006 ¶0041. Annotated Figure 3 below shows the uplink direction, which is from the radio heads back to the CMU. In the uplink direction, the CMU (the *baseband unit*) receives signals from each the radio heads and transports them back to the core network. EX-1006 ¶¶0041. Annotated Figure 3 shows this:

Figure 3

"In the uplink direction, radio signals …are received by the remote radio heads RH1 to RH5 and sent to the core network CN"

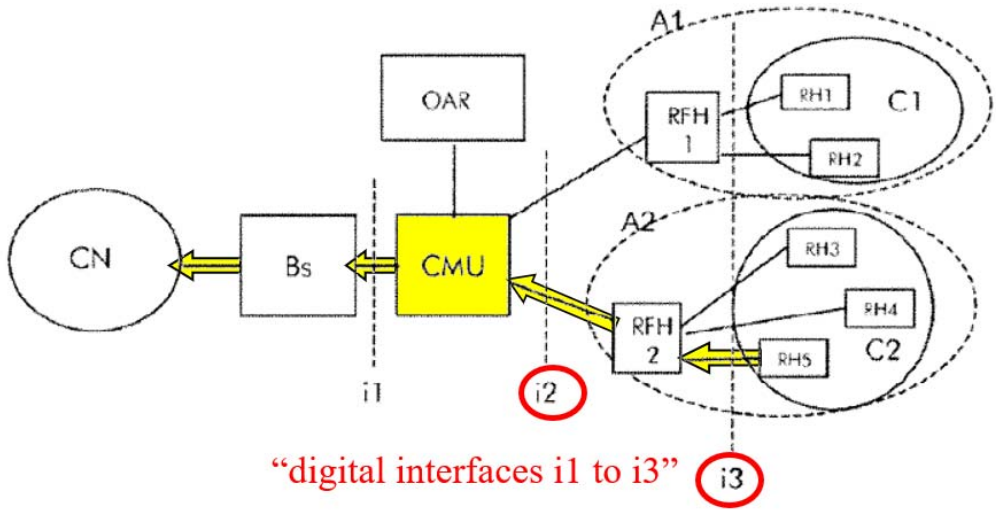

"digital interfaces i1 to i3"

EX-1006 Fig. 3.

230. The communication interfaces between the CMU and radio heads (i2 and i3) are digital; therefore, the CMU receives digital signals. EX-1006 ¶0039 ("*digital* interfaces i1 to i3"). More specifically, the CMU is configured to receive

over the i2 interface digital packets containing radio signals received by the radio heads from the user devices. *Compare* EX-1006 ¶0041 (explaining the uplink direction operates "Similarly" to the downlink) *with* ¶0040 (explaining "*digital* packets" are communicated over the interfaces in the downlink) and ¶0039 (explaining the interfaces are "*digital*"). The *digital* packets containing radio signals received by the radio heads from the user devices are examples of the recited "*digital signals.*" Because Hettstedt's system uses digital interfaces for the transport between the RRHs and the CMU (interfaces i2 and i3) and digital packets, a POSITA understands that the radio signals received by the radio heads from the user devices are digitized prior to transport over the digital interfaces and prior to the CMU receiving them. The radio signals must be digitized prior to transport over the digital interfaces and prior to being packetized into digital packets.

231. The CMU is configured to perform reciprocal actions in the downlink and uplink. EX-1006 ¶0028 ("The cell management unit provides data management in terms of packaging and addressing to the radio heads in downlink and un-packaging and addressing to the base stations in uplink"). As applied to this limitation, the CMU receives digital packets, unpackages the digital packets, and addresses the contents of the packets to the correct base stations. *Id.*

B. Independent Claim 8

232. Claim 8 recites elements 8A-8G. Element 8A is the preamble. Elements 8B-8G are the body of the claim. I will discuss the (a) the preamble (8A) and then (b) the body of the claim (8B-8G). The language of claim 8 closely tracks the language of claim 1, but with a different preamble. Hettstedt discloses each and every element of Claim 8. Therefore, Hettstedt anticipates Claim 8.

1. Preamble (Element 8A)

233. The preamble (Element 8A) recites: "8. A *baseband controller* for use in the transport of wireless communications." I note that the body of the claim, however, never refers to a "baseband controller." Instead, it changes to the term "a baseband unit" as in claim 1. My analysis above shows that Hettstedt discloses a baseband unit.

234. If the preamble is a limitation, Hettstedt discloses it. Hettstedt's cell management unit (CMU) is "a baseband controller."

235. First, as already explained, the CMU operates at *baseband* (e.g., receiving, packaging, addressing, and outputting baseband signals).

236. Second, the CMU performs "*controller*" functions. It *controls* the traffic in the cells and distribution of carriers to the radio heads. EX-1006 ¶0029 ("Due to a traffic activity *control*…"), ¶0050 ("…allocation of each carrier can be tuned remotely by the cell management unit CMU"); ¶0028 ("…cell management

unit performs the frequency allocation of the remote radio heads"). It also "comprises" the functionality to manage numerous different operations (load balancing, activation, de-activation, mapping, alignment, synchronization). *Id.* ¶0043-0048 ("The CMU preferably comprises the following functionality…").

237. Third, I note that '499 patent does not disclose explain the different between a baseband controller and baseband unit. If the claim requires a difference, (a) the *portion of the CMU* that performs the functions corresponding to the limitations in the body of the claim can be considered the *baseband unit* and (b) the *entire CMU* that can be considered the *baseband controller* as it comprises both the recited baseband unit and additional functionality (e.g., alignment, synchronization).

238. Four, as already explained above when analyzing the preamble of claim 1, the CMU is "*for use in the transport of wireless communications.*"

2. Body of the Claim (Elements 8B-8G)

239. Hettstedt discloses each and every element in the body of claim 8. As already mentioned, all these elements overlap with the elements of claim 1, except element 8C.

240. Element 8B is taught by Hettstedt for the same reasons as Element 1E.

241. Element 8C is not claim in Claim 1. Element 8C recites: "*at least one interface to communicatively couple the baseband unit to a plurality of remote*

units, including at least a first remote unit." Hettstedt discloses this added element. Specifically, Hettstedt teaches that the CMU comprises "interface i2" to indirectly couple the CMU (the *baseband unit*) to multiple remote radio heads (*plurality of remote units)*, which discloses this. EX-1006 ¶0040 ("second digital connection interface i2, e.g. an electrical or optical connection using Ethernet protocol"), ¶0039. Figure 3 is exemplary:

Figure 3

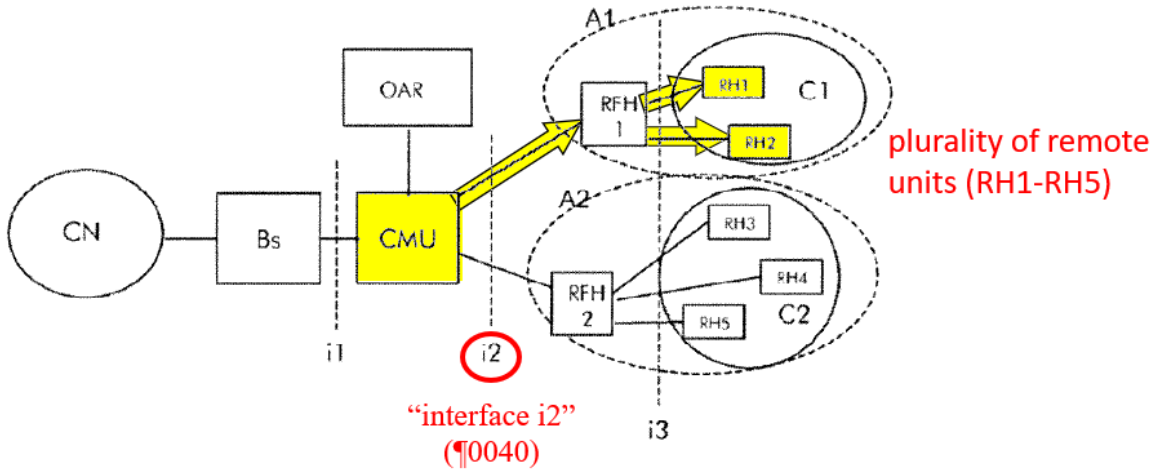

EX-1006 Fig. 3; *see also* Figs. 4-6.

242. Element 8D is taught by Hettstedt for the same reasons as Element 1F.

243. Element 8E is taught by Hettstedt for the same reasons as Element 1G.

244. Element 8F is taught by Hettstedt for the same reasons as Element 1H.

245. Element 8G is taught by Hettstedt for the same reasons as Element 1I.

246. Therefore, Hettstedt discloses every element of claim 8 and anticipates claim 8.

C. Independent Claim 14

247. Claim 14 recites elements 14A-14E. Element 14A is the preamble. Elements 14B-14E are the body of the claim. I will discuss the (a) the preamble (14A) and (b) then the body of the claim (14B-14E). The language of claim 14 closely tracks the language of claims 1 and 8, except in the form of a method. Hettstedt discloses each and every element of Claim 8. Therefore, Hettstedt anticipates Claim 8.

1. Preamble (Element 14A)

248. The preamble (Element 14A) recites: "A method for providing digital signals in a Distributed Antenna System (DAS)." The body, however, never refers to the preamble (either to the term "digital signals," "Distributed Antenna System," or "DAS").

249. If the preamble is a limitation, Hettstedt discloses it.

250. First, Hettstedt's discloses a "method.' EX-1006 ¶0008 ("The object of the present invention is to provide a <u>method</u> and a system for wireless cellular indoor communications with improved cell and load balancing management." (emphasis added)), ¶¶0016-0025. Hettstedt's Title expressly refers to a method:

"METHOD AND SYSTEM FOR WIRELESS CELLULAR INDOOR COMMUNICATIONS." *Id.* at Title. Using Hettstedt's system described above for claim 1, results in performing the methods recited in claim 14.

251. Second, Hettstedt's method provides "digital packets," which are *"digital signals." Id.* ¶0040 ("Said signals are then passed in digital form…digital packets"); *see also* ¶0041. As explained in claim 1, for example, Hettstedt's CMU sends digital packets to the radio heads in the downlink and receives digital packets back from the radio heads in the uplink.

252. Third, Hettstedt's method provides these digital signals in a Distributed Antenna System (DAS). I note that Patent Owner admitted Hettstedt's system discloses a DAS in a prior IPR. EX-1027 at 10 ("To effectuate load balancing at the headend of the DAS, *i.e.*, the CMU, referring to FIG. 5 (reproduced below), *Hettstedt* teaches that the CMU distributes carriers…"). The '499 patent does not expressly define a DAS. The background art explains that a "DAS" functions to "extend the RF coverage of one or more BTSs into a desired area, such as a building or office campus for instance." EX-1026 at 1:64-2:17 ("To provide flexibility in the design of mobile telephone networks, 'distributed antenna systems,' also known as remote antenna systems, have been developed. Generally speaking, a distributed antenna system (DAS) functions to extend the RF coverage of one or more BTSs into a desired area, such as a building or office campus for

instance."). This is consistent with the exemplary "distributed antenna system" (100) disclosed in the '499 specification:

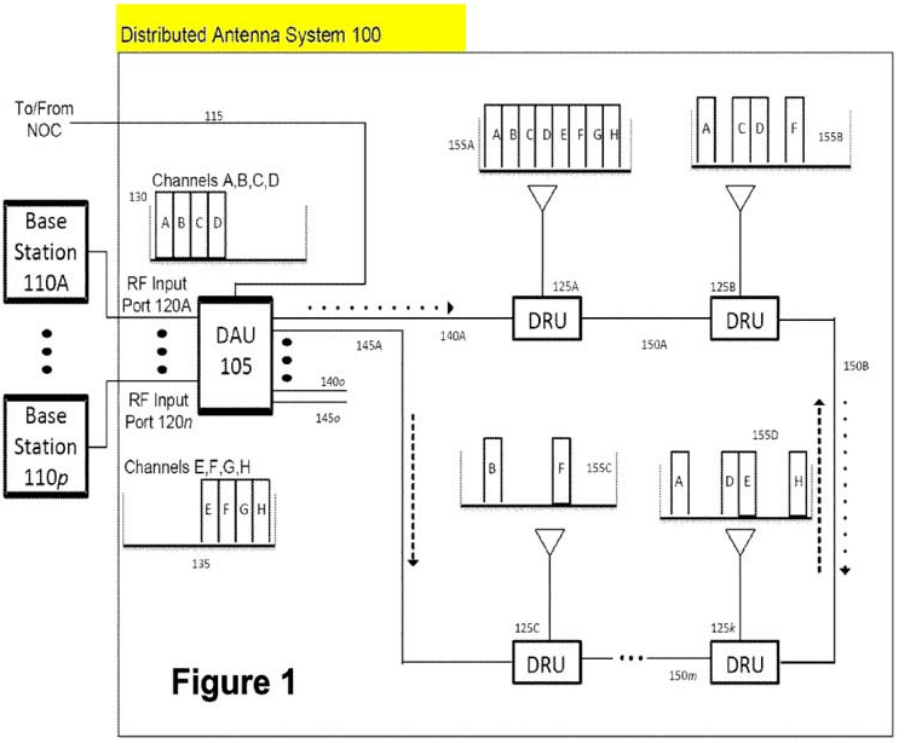

As shown, Box 100 connects to base stations and the specification explains the main unit (DAU) and remote units (DRUs) extend the coverage of the basesttation into areas within buildings, e.g., at the cafeteria, by radiating RF signals to the user devices. EX1001 at 4:63-5:52, 6:27-30. Likewise, Hettstedt's systems extends the extend the RF coverage of one or more BTSs into a desired area such as buildings. Hettstedt's (a) main unit (CMU) connects to "a number base stations" (¶0027), (b) the CMU communicates the base stations signals to the distributed remote radio

heads (¶0040),[5] and (c) the distributed remote radio heads radiate RF signals to the user devices (¶0050) within, e.g., buildings (¶0029). EX-1006 ¶0027 ("The cell management unit is the interface between a number of base stations…"); ¶¶0040-0041 ("CMU…forwards said digital packets …to the RF Hubs RFH1 and RFH2, which in turn pass the packets …to the remote radio heads RH1 to RH5….[s]imilarly, in the uplink direction, radio signals Ws transmitted by the mobile stations located in the indoor environment are received by the remote radio heads RH1 to RH5 and sent to the core network CN"), ¶0050 ("The remote radio heads RH1 to RH5 are <u>RF air interfaces to users</u> providing a digital interface to the network."), ¶0029 ("In this way, capacity can follow moving users in complex buildings, such as airports, stations, etc., with dynamic distribution of hot-spots.") Here is an annotation showing Hettstedt's DAS:

[5] The '499 patent notes that a "Remote Radio Heads Unit" (like Hettstedt) may be used interchangeably with a digital remote unit (the preferred embodiment) because of the "similarity."

Figure 3

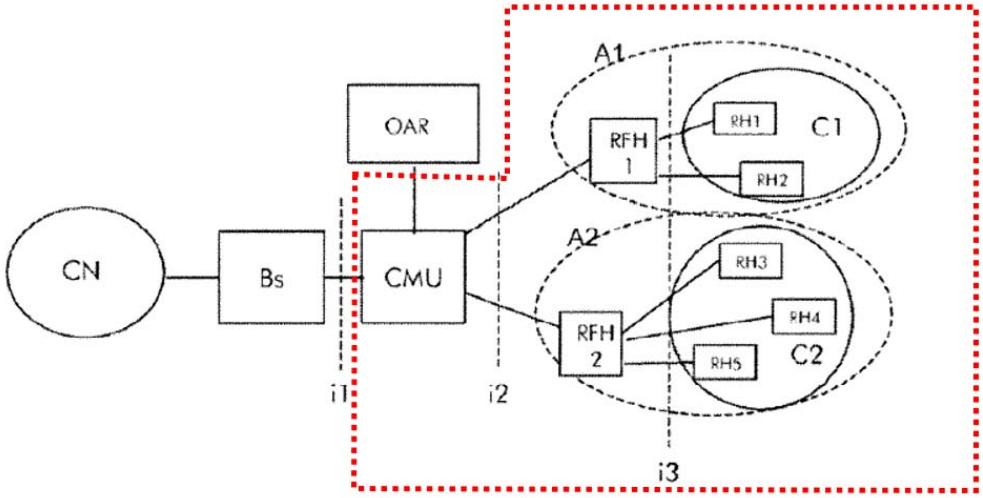

EX-1005 ¶¶0039-0041.

2. Body of the Claim (Elements 14A-14E)

253. Hettstedt discloses each and every element in the body of claim 14. As already mentioned, all these elements overlap with the elements of claim 1 and 8, except they are written in the form of a method.

254. Element 14B is taught for the same reasons as Element 1F.

255. Element 14C is taught for the same reasons as Element 1G.

256. Element 14D is taught for the same reasons as Element 1H.

257. Element 14E is taught for the same reasons as Element 1I.

258. Therefore, Hettstedt discloses every element of claim 14 and anticipates claim 14.

D. Dependent Claims

259. Hettstedt discloses each and every element of the following dependent claims (and their parent claims). Therefore, Hettstedt anticipates these dependent claims.

1. Claims 2, 9, 19[6]

"2. The system of claim 1 wherein the baseband unit is configured to <u>packetize</u> each digital representation of a radio resource."

"9. The baseband controller of claim 8 wherein the baseband unit is configured to <u>packetize</u> each digital representation of a radio resource."

"19. The method of claim 14 further comprising <u>packetizing</u>, at the baseband unit, at least a subset of the plurality of radio resources."

260. Hettstedt teaches that the CMU (the *baseband unit*) packages the carriers (the *radio resources*) into "digital packets", which discloses these claims. EX-1006 ¶0040, ¶0053.

261. More specifically, Hettstedt teaches that the CMU (the *baseband unit*) performs the actions of "packaging and addressing" the carriers into the "digital packets" *Id.* ¶0028, ¶0040. The actions of "packaging and addressing" the carriers

[6] Claim 2 is representative of claims 9, 19; they are invalid for the same reasons. The same is true for each of the following sections listing multiple dependent claims.

into "digital packets" are examples of *packetizing*, i.e., forming packets. *Id.* ¶0028, ¶0040.

262. The "digital" packets contain the carriers in "digital form," which is an example of packetizing a *"digital representation of a radio resource."* EX-1006 ¶0040. The CMU does this packetizing for each carrier it receives from the base stations. EX-1006 ¶0053.

263. Hettstedt teaches a specific example of the digital packets: "Ethernet packets." EX-1006 ¶0053. Hettstedt illustrates an example of each of radio resources (e.g., carriers 1-M) being distributed in digital Ethernet packets according to MAC addresses:

Figure 5

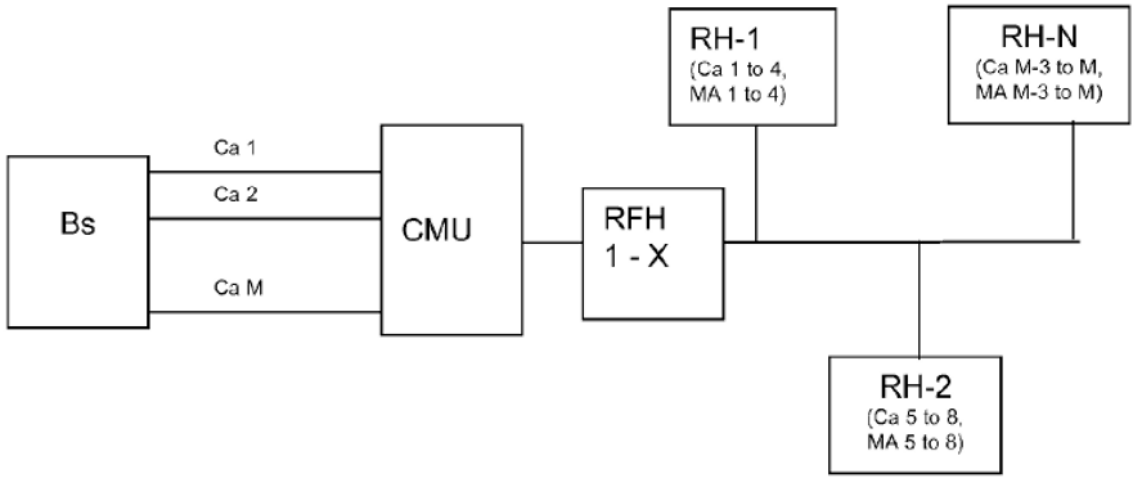

Id. at Fig. 5. Hettstedt explains: "FIG. 5 shows an example of carrier distribution according to the wireless cellular indoor communications method of the invention

considering four carriers per remote radio head RH-1 to RH-N. The base station Bs provides the M carriers Ca1 to CaM to the cell management unit CMU which in turn distributes it between the at least one RF Hub RFH 1 to X of the next stage. The one or more RF Hubs distribute carriers 1 to 4 to a first remote radio head RH-1 according to medium access control (MAC) addresses MA1 to MA4 in the Ethernet packets, carriers 5 to 8 to a second remote radio head RH-2 according to MAC addresses 5 to 8, and carriers M-3 to M to an N remote radio head RH-N according to MAC addresses M-3 to M, where M=Nx4." *Id*. ¶0053. This is an example of the CMU packetizing each digital representation of the radio resource by creating digital ethernet packets contain the M carriers in "digital form." EX-1006 ¶0040, ¶0053.

2. Claims 3, 10, and 15[7]

"3. The system of claim 1 wherein the digital representation of the first set of radio resources includes destination information identifying the first remote unit and the digital representation of the second set of radio resources includes destination information identifying the first remote unit."

"10. The baseband controller of claim 8 wherein the digital representation of the first set of radio resources includes destination

[7] See my earlier discussion of the lack of antecedent basis in this claim for "the second remote unit" in Claim 15. Resolving the lack of antecedent basis/meaning for "the second remote" is unnecessary: Hettstedt discloses it under any interpretation because it identifies each "individual RRH" (which covers both a first and second remote) "through their MAC addresses" (which covers both a first and second destination information) and places the addresses "in" the Ethernet packets and teaches a specific example. EX-1006 ¶0045, ¶0053, Fig. 5.

information identifying the first remote unit and the digital representation of the second set of radio resources includes destination information identifying the first remote unit."

"15. The method of claim 14 wherein the digital representation of the first set of radio resources includes destination information identifying the first remote unit and the digital representation of the second set of radio resources includes destination information identifying the second remote unit."

264. Hettstedt teaches that the digital packets sent by the CMU to the radio heads can be "Ethernet packets" that include "MAC addresses," which discloses these claims. EX-1006 ¶0053, ¶0028, ¶¶0043-0045.

265. First, Hettstedt's MAC addresses are *destination information*. They are the means through which the "individual radio heads" are "identified." EX-1006 ¶0045. The CMU maps which carriers go to which radio heads (the destinations) using the MAC addresses. *Id.* Figure 5 shows an example:

Figure 5

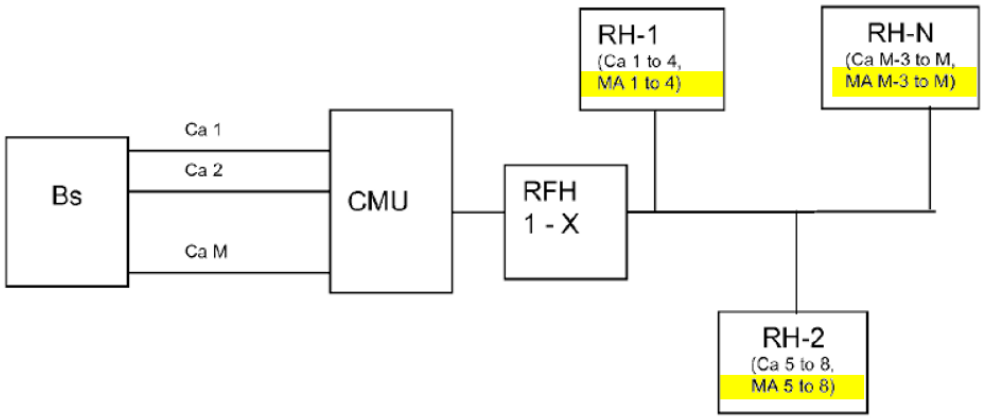

EX-1006. The "MA" designator refers to "MAC address." EX-1006 ¶0053. I note that Patent Owner has acknowledged that Ethernet packets have "destination

information." EX-1024 at 24 (PDF 48) ("*ethernet* and IP protocols *have destination information*.").

266. Second, Hettstedt explains that the MAC addresses are "in" the digital packets. EX-1006 ¶0053 ("The one or more RF Hubs distribute carriers 1 to 4 to a first remote radio head RH-1 according to medium access control (MAC) addresses MA1 to MA4 in the Ethernet packets, carriers 5 to 8 to a second remote radio head RH-2 according to MAC addresses 5 to 8, and carriers M-3 to M to an N remote radio head RH-N according to MAC addresses M-3 to M, where M=Nx4."). Therefore, Hettstedt discloses that its digital representations of the radio resources *"include"* the destination information.

267. A POISTA also knows that Hettstedt discloses the limitations because Hettstedt's Ethernet packets are sent using the standardized "Ethernet protocol." EX-1006 ¶0040 ("The cell management unit CMU performs data packaging in downlink and forwards said digital packets through a second digital connection interface i2, e.g. an electrical or optical connection using Ethernet protocol, to the RF Hubs RFH1 and RFH2, which in turn pass the packets through a third connection interface i3, e.g. an electrical or optical connection using Ethernet protocol, to the remote radio heads RH1 to RH5."). The Ethernet protocol is defined by the IEEE 802.3 standard. The 802.3 standard defines the format for Ethernet communications. Per the standard, for example, there is a basic frame

format for all MAC implementations. Per the defined frame format, Ethernet frame includes a "destination" field for the MAC address of the intended destination (i.e., the intended RH in Hettstedt). Hettstedt teaches to use this where it teaches that the CMU performs the "packaging and addressing to the radio heads in downlink." EX-1006 ¶0028, ¶0053.

268. As discussed above with respect to Ground 1, Claim 15 appears to refer in error to "the second remote unit" which lacks any antecedent basis. If this is construed as a reference to "the first remote unit," then Hettstedt anticipates for the same reasons it anticipates claims 3 and 10. Alternatively, if it is interpreted as requiring the digital representation of the second set be sent to a second remote unit, then Hettstedt discloses this as well. As discussed above with respect to claims 3 and 10, Hettstedt's use of Ethernet links to send digital representations of carriers to the radio heads, is a disclosure of using MAC addresses for delivering Ethernet packets to each remote radio head (including to a first and to a second remote unit). Further, Hettstedt discloses that the same radio resources can be delivered to multiple radio heads. EX-1006 ¶0052 ("remote radio heads can belong to the same cell area"); Fig. 4. Therefore, Hettstedt discloses the limitations of claim 15 no matter what interpretation is given to "the second remote unit."

3. Claims 4, 11, and 16:

"4. The system of claim 1 wherein the first set of radio resources is a subset of the plurality of radio resources and includes <u>at least some radio resources from the first signal source and at least some radio resources from the second signal source.</u>"

"11. The baseband controller of claim 8 wherein the first set of radio resources is a subset of the plurality of radio resources and includes <u>at least some radio resources from the first signal source and at least some radio resources from the second signal source</u>."

"16. The method of claim 14 wherein the first set of radio resources is a subset of the plurality of radio resources and includes <u>at least some radio resources from the first signal source and at least some radio resources from the second signal source</u>."

269. First, Hettstedt teaches that CMU has a "complex matrix function" to "combine different base stations." EX-1006 ¶0042. As already explained, a base station is a *"signal source."* Therefore, Hettstedt teaches the CMU can combine different signal sources (e.g., the *first and second signal source*).

270. Second, Hettstedt teaches that CMU has an "intelligent switching unit" for "data distribution and cell organization configurable in size and functionality according to system dimensions." EX-1006 ¶0042. The CMU also the functionality for "mapping" the carriers to individual radio heads. EX-1006 ¶¶0010-0012 ("the cell management unit comprising…means for mapping carriers, time, frequency or time-frequency allocations to individual radio heads"), ¶0045 ("mapping…through their MAC addresses or the connectors of the respective digital lines to which the radio heads are connected"). As explained below, a

POSITA knows what an intelligent switching unit and mapping functionality are (e.g., a programmable switch that may have any combination of the inputs mapped to any combination of the outputs using mapping data such as a data table). Therefore, using the complex matrix function in combination with the intelligent switching unit, mapping means, and addressing, the CMU can send a first set of radio resources wherein the first set of radio resources is a subset of the plurality of radio resources (e.g., the total number of carriers from all the base stations) and includes at least some radio resources from the first signal source (e.g., carriers from the first base station) and at least some radio resources from the second signal source (e.g., carriers from the second base station). After combining, the CMU distributes the digital packets with the base station carriers (e.g., the *first set of radio resources*) to the RH hubs, and the RF hubs distribute the digital packets to the radio heads. EX-1006 ¶0040 ("RF Hubs … pass the packets …to the remote radio heads), ¶0049 ("data distribution to the remote radio heads in downlink").

271. Consider the example in Figure 6 with eight base stations each providing four carriers, i.e., 32 carriers. Using the complex matrix function, intelligent switching unit, mapping means, and addressing, a POSITA understands that the CMU could send a first set of carriers wherein the first set of carriers is a subset of the plurality of 32 total carriers and includes (a) at least some carriers

from BS1 (e.g., two of its four carriers) and (b) at least some carriers from BS2 (e.g., two of its four carriers):

1st and 2nd base station (signal source)

Figure 6

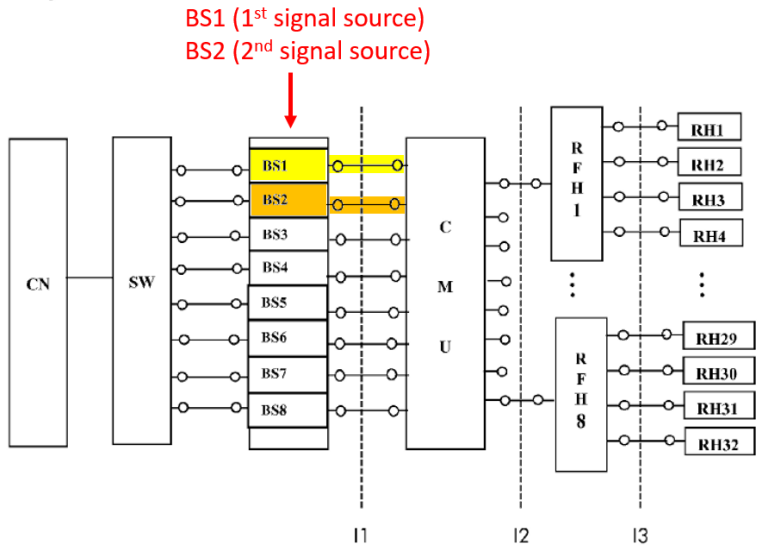

Carriers (radio resources) from base stations

Figure 6

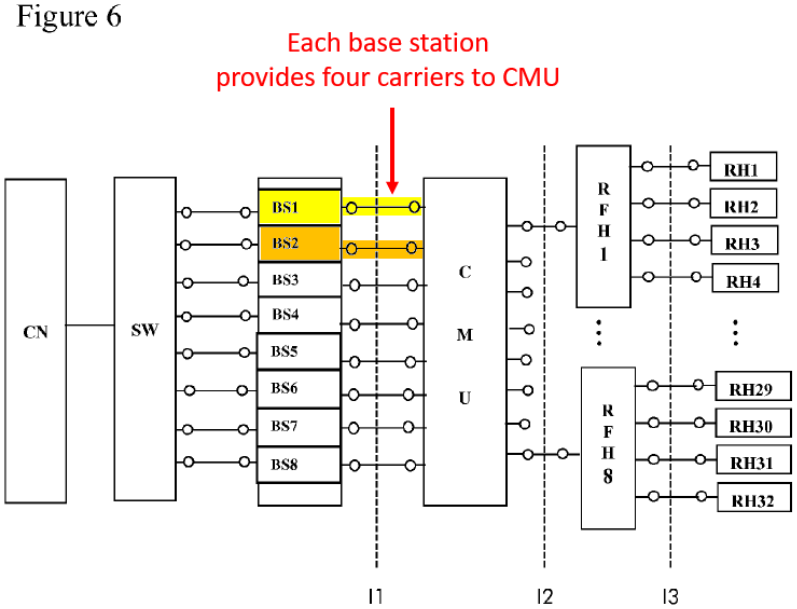

First set of carriers including carriers from 1st & 2nd base station

Figure 6

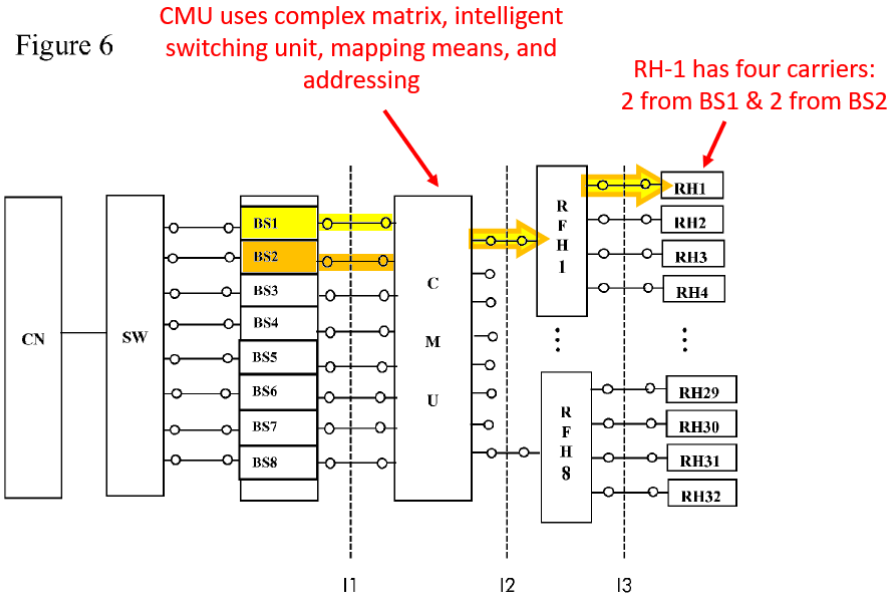

272. The prior art corroborates that such switch/matrix functionality allows a unit to send any combination of inputs (here the base stations' carriers). EX-1022 ¶0002 ("The switch matrix allows <u>any combination of inputs</u> to be connected to any combination of outputs so that base stations can be connected to antennas in a very flexible manner." (emphasis added)) The prior art also corroborates that such "mapping" functionality can be used to route signal from multiple different sources to the same remote unit. EX-1026 at 2:64-3:5, 9:31-43 ("Each RAN coverage segment…may be a cell or sector operating on a respective RF frequency channel or coverage areas produced by <u>respective base stations</u>.…just as <u>the mapping data</u> could correlate a given RAN coverage segment with multiple DAS unit IP addresses as shown in FIG. 2, the mapping data could correlate <u>a given</u>

DAS antenna unit IP address with multiple RAN coverage segments." (emphasis added)).

273. Consider also Hettstedt's broad, flexible disclosure. Hettstedt broadly teaches (a) the number of RF hubs can be one or more (¶0053), (b) each RF hub can be connected to one or more radio head (Abstract), and (c) each RH hub can be connected to radio heads that serve the same or different cells (¶0052). Within this broad disclosure, Hettstedt teaches multiple configurations where the first set of radio resources includes at least some radio resources from the first signal source and at least some radio resources from the second signal source.

274. As a first example, when the CMU combines different base stations with a first RH Hub that is connected to one radio head, the set of resources sent to that radio head (the first set) will have at least some resources from each base station.[8] As a second example, when the CMU combines different base stations with a first RH Hub that is connected to plural radio heads in the same cell, each of those radio heads will get the same set of carriers (the first set) because they are in the same cell and that set will have at least some resources from each base stations.

[8] There is still a plurality of remotes as recited in the independent claim because the CMU is connected to other remote units through other RF hubs. EX-1006 ¶0040 ("CMU…forwards said digital packets…to the RF Hubs RFH1 *and RFH2*, which in turn pass the packets…to the remote radio heads *RH1 to RH5*."), Figs. 3-6.

275. As a third example, when the CMU combines different base station signals and there is only one hub, the second example also applies—the set of resources the hub distributes to each of the radio heads will include the different base station signals.

4. Claim 5:

"5. The system of claim 1 wherein the baseband unit and at least one of the plurality of signal sources are part of a baseband controller."

276. Hettstedt teaches that CMU (the *baseband unit*) and base station (*signal source*) can be separated or merged. Compare Figure 3 and 4:

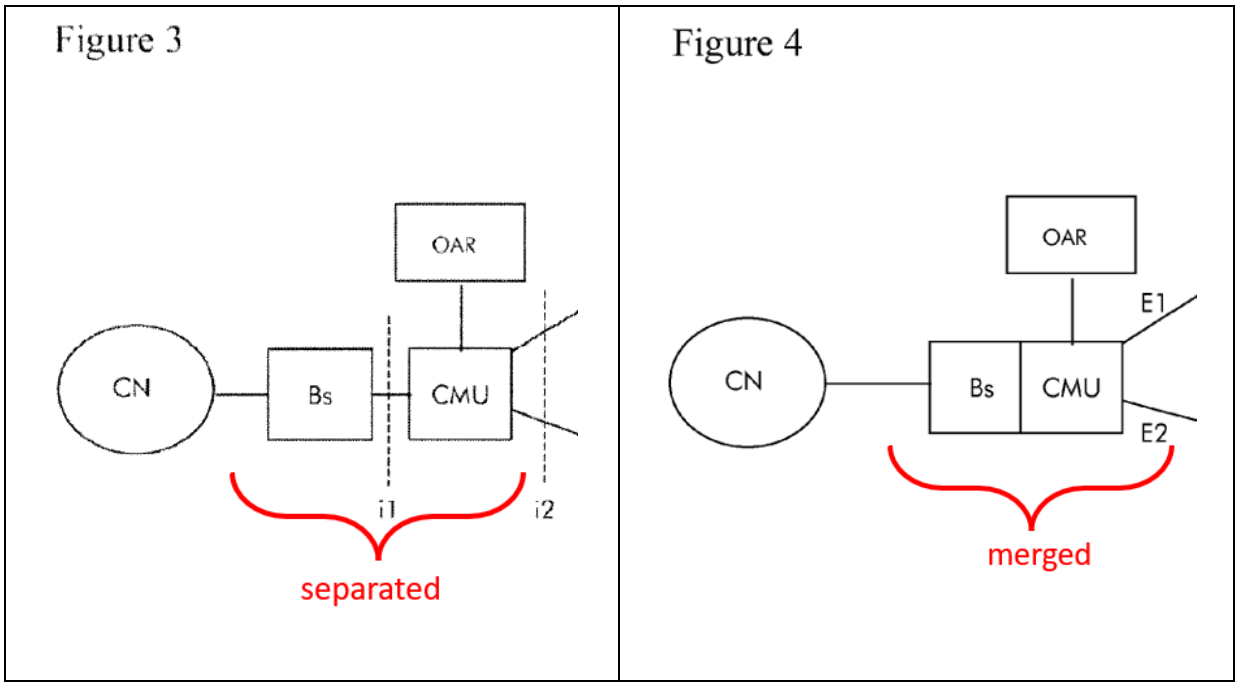

EX-1006. The merged combination is a baseband controller. (1) It performs *controller* functions as I discussed above for the preamble of Claim 8. (2) It

operates at *baseband* as I discussed above for the preamble of Claim 8. Therefore, when merged, the CMU and base station disclose this claim.

5. Claims 13 and 18

"13. The baseband controller of claim 8 wherein the plurality of radio resources include a first composite signal from the first signal source and a second composite signal from the second signal source, and the baseband unit is configured to form the digital representation of the first set of radio resources from a first subset of the first composite signal and a second subset of the second composite signal."

"18. The method of claim 14 wherein the plurality of radio resources include a first composite signal from the first signal source and a second composite signal from the second signal source, the method further comprising forming, at the baseband unit, the digital representation of the first set of radio resources from a first subset of the first composite signal and a second subset of the second composite signal."

277. Hettstedt teaches both parts of these claims.

First clause:

278. Hettstedt teaches the first clause in these claims about the radio resources including a first and second "composite signals" (i.e., "*wherein the plurality of radio resources include a first composite signal from the first signal source and a second composite signal from the second signal source"*).

279. The '499 patent specification explains that a "composite signal" can refer to, for example, when a base station has "more than one" carrier allocated to its channel. EX-1001 at 5:53-59. The disclosed example of a first and second composite signal from the first and second signal source is where the DAU receives (1) "carriers A-D" from a first base station and (2) "carriers E-H" from a

different base station—i.e., four carriers from each base stations. EX-1001 at 5:59-6:2.

280. Hettstedt discloses essentially this same examples. Hettstedt teaches: "*Each base station* can provide *four carriers* at individual services." EX-1005 ¶0054. Hettstedt gives the example of eight different base stations each providing four carriers for a total of 32 carriers. *Id.* Figure 6 of Hettstedt teaches each of base station provides its four carriers for its own link:

Figure 6

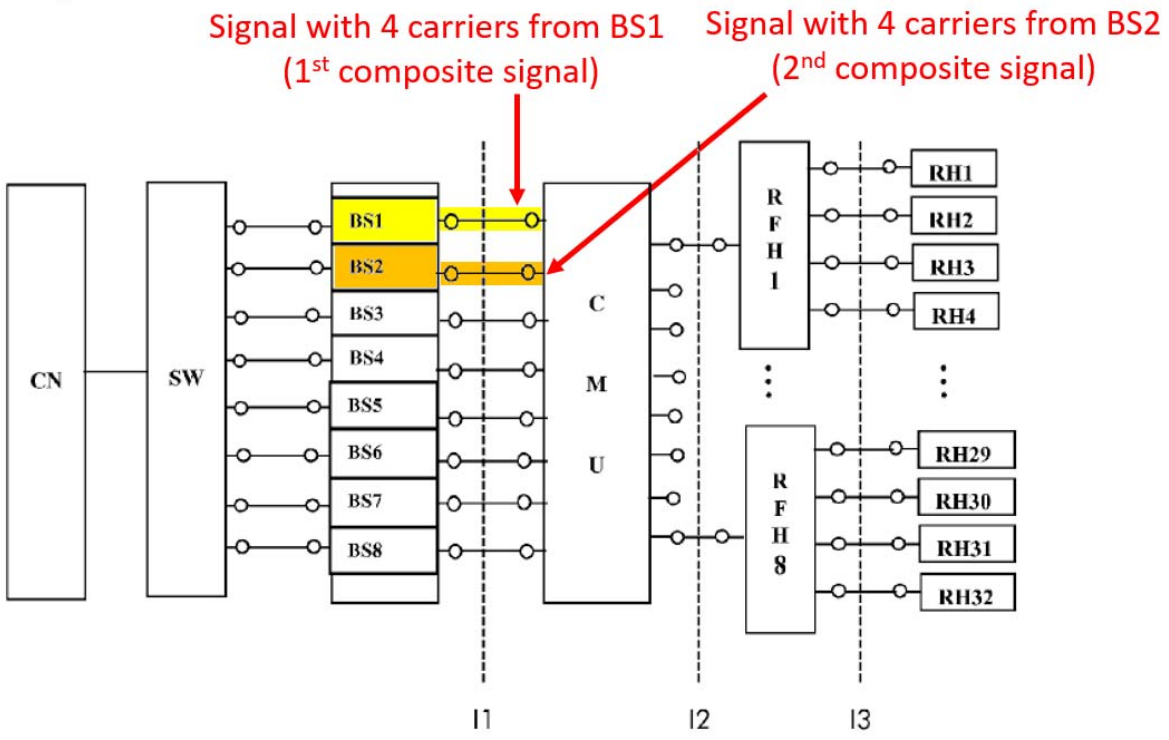

The signal traveling over each of these links is a composite signal in that each such signal comprises four carriers. EX-1005 ¶0054. As shown here, the plurality of carriers (the 32 total carriers) includes (a) the signal with 4 carriers from the BS1

(the *first composite signal from the first signal source*) and (b) the signal with 4 carriers from the BS2 (the *second composite signal from the second signal source*). Thus, Hettstedt teaches that the *plurality of radio resources* (e.g., the 32 carriers) include *a first composite signal from the first signal source* (the signal with four carriers from any of the eight base stations) and *a second composite signal from the second signal source* (the signal with four carriers form any of other of the eight base stations). EX-1006 at Fig. 6, ¶0054.

281. Hettstedt has a second teaching that further corroborates that CMU receives composite signals from the base stations. As shown above, the CMU receives the signals from the base stations over the "i1" interface. EX-1005 ¶0040, Fig. 6. Hettstedt teaches that the i1 interface may be CPRI. EX-1005 ¶0040. In other words, Hettstedt teaches that each of the links illustrated in Figure 6 may be CPRI link delivering four carriers:

Figure 6

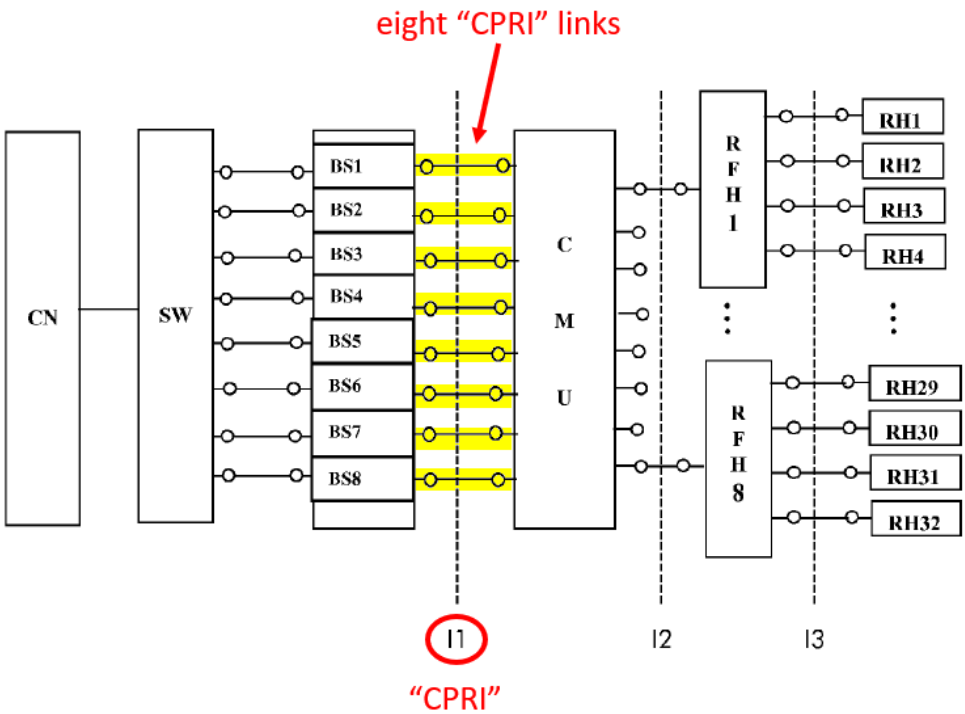

When there are multiple carriers, CPRI explains that the carriers are multiplexed together into a composite signal, i.e., that each of the CPRI links above is composite CPRI signals containing four carriers. The CPRI standard defines the format for CPRI signals. In each CPRI frame are sub-parts called "AxC Containers." Each of these containers contains the samples of "one" carrier (called an Antenna-carrier or AxC):

Antenna-carrier (AxC):

One antenna-carrier is the amount of digital baseband (IQ) U-plane data necessary for either reception or transmission of only one carrier at one independent antenna element.

Antenna-carrier (AxC) Group:

An **AxC Group** is an aggregation of N_A AxC with the same sample rate, the same sample width, the same destination SAP_{IQ}, and the same radio frame length. In case of N_A=1 an **AxC Group** is the same as an **AxC**.

AxC Container:

An **AxC Container** is a sub-part of the IQ-data block of one basic frame. For UTRA-FDD it contains the IQ samples of one AxC for the duration of one UMTS chip. For WiMAX it contains IQ sample bits of one AxC and sometimes also stuffing bits. For E-UTRA it contains one or more IQ samples for the duration of one UMTS chip or it contains IQ sample bits and sometimes also stuffing bits.

EX-1007 at 7. When there are multiple carriers, these containers (one for each carrier) are packaged together into the basic frames like this:

4.2.7.2.3. Mapping of **AxC Container** within one Basic Frame

The following mapping rules apply for both, uplink and downlink:

- Each **AxC Container** is sent as a block.
- Overlap of **AxC Containers** is not allowed.
- The position of each **AxC Container** in the IQ data block is decided by one of the following options:
  - Option 1 (packed position):

    Each **AxC Container** in a basic frame is sent consecutively (without any reserved bits in between) and in ascending order of AxC number.
  - Option 2 (flexible position) :

    For each **AxC Container**, the application shall decide at what address (W, B – for W>0) in the IQ data block the first bit of the **AxC Container** is positioned. The first bit of an **AxC Container** shall be positioned on an even bit position in the IQ data block (B shall be even).
- The bits not used by **AxC Containers** in the IQ data block in the basic frame shall be treated as reserved bits ("r").

Figure 13 illustrates these mapping rules for both mapping options.

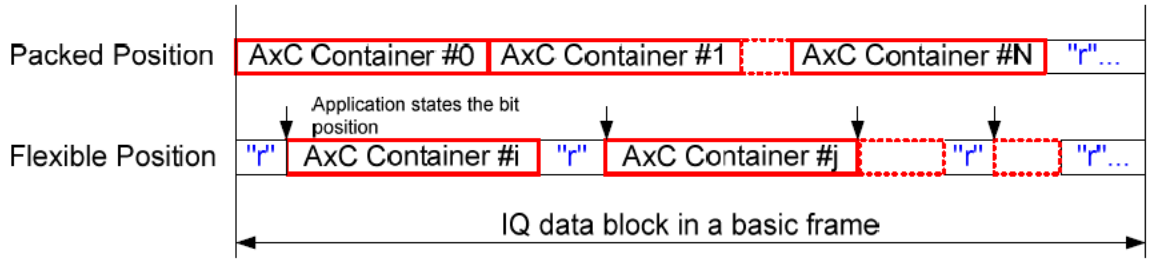

EX01007 at 34. This is an example of a *composite signal* composed of multiple carriers (one for each AxC Container). Applying this to Figure 6 in Hettstedt, the

CMU receives eight different composite CPRI signals (one from each base station) where each CPRI signal comprises four different AxC Containers packaged together (one for each carrier).

Second clause:

282. Hettstedt also teaches the second clause in these claims about forming the recited digital representation from both the first and second composite signal (i.e., "*the digital representation of the first set of radio resources from a first subset of the first composite signal and a second subset of the second composite signal*").

283. First, as already explained above for Claims 1 and 4, the CMU (the *baseband unit*) is configured to packetize the carriers in "digital form" into "digital" packets, contain which is an example of forming the digital representation of the first set of radio resources. EX-1006 ¶¶0039-0041, ¶0053, ¶0028.

284. Second, as explained above for claim 4, the CMU can combine the carriers from different base stations using the complex matrix function, intelligent switching unit, and addressing, i.e., when forming the packets the CMU can combine a first subset of the first composite signal (e.g., carriers from the first base station composite signal) and a second subset of the second composite signal (carriers from the second base station composite signal). When the CMU combines different base stations, that involves combining a *first subset of the first*

composite signal and a second subset of the second composite signal. What is being combined is the carriers (the *radio resources*) from the different base stations. EX-1006 ¶¶0053-0054. The carriers from the first base station are a *first subset of the first composite signal*. The carriers from the different base stations are a *second subset of the second composite signal*.

285. Consider again the example in Figure 6 with eight base stations each providing four carriers, i.e., 32 carriers. Using the complex matrix function, intelligent switching unit, mapping means, and addressing, a POSITA understands that the CMU could form the digital representation of the first set of carriers from (a) two of the four carriers from the first base station's signal (i.e., *a first subset of the first composite signal*) and (b) two of the four carriers from the second base station's signal (i.e., *a second subset of the second composite signal*):

Figure 6

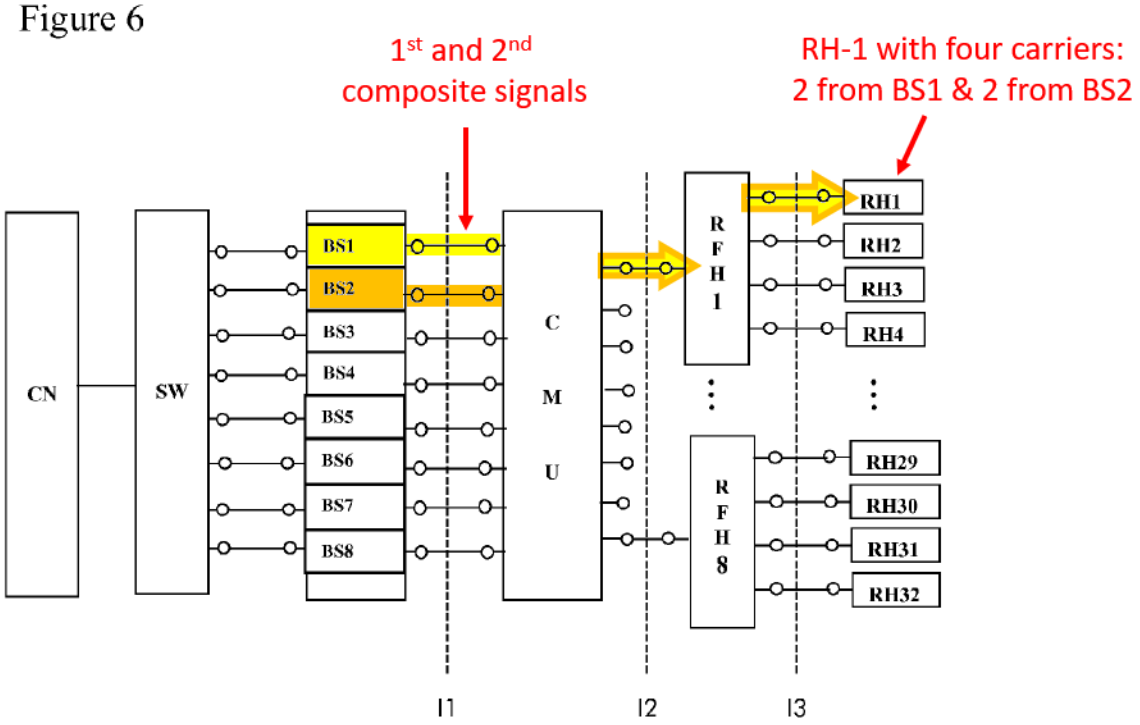

EX-1006 at Fig. 6, ¶0054.

XII. Ground 6: Hettstedt plus Wu renders obvious claims 1-5, 8-11, 13-16, 18-19

A. Independent Claims 1, 8, 14

286. First, as explained in Ground 5, Hettstedt discloses a *baseband unit* because it teaches the CMU receives, packages, and transmits baseband signals (thus, it operates at baseband).

287. If Petitioner argues the term "baseband unit" *further* requires the functionality to *convert* analog RF signals to baseband format, the combination of

Hettstedt and Wu renders that obvious. However, nothing in the plain language recites "convert."[9]

288. In the context of Hettstedt's preferred embodiment, the CMU does not include the initial circuitry to convert analog RF signals to baseband format because the CMU receives signals from a *digital* base station that already start in baseband format. EX1006 ¶¶0040, 0030. But digital base stations represent a newer type of base station. It was well-known there are non-digital base station that instead provide analog RF signals that require conversion for transport in digital systems like Hettstedt's. These are more conventional base stations. The Sabat reference provides an overview of the state of the art:

> [0008] As shown in FIGS. 1 and 2, the current DAS solutions use either analog, i.e., `RF over fiber`/`Analog DAS`, links or sampled digital, i.e., `digital DAS`, links and are based on an analog RF connection to the base station.
> [0014] There is now a new class of base stations with digital input and outputs that are meant to be used in conjunction with remote radio equipment to provide installation flexibility.

EX-1010 ¶0008, ¶0014 (emphasis added). Figures 1 and 2 illustrates the analog base stations providing "RF" signals:

[9] A district court has already rejected the requirement that a baseband unit convert signals to baseband format. EX-1028 at 10. Furthermore, such an argument would be inconsistent with Patent Owner prior position stated to the PTAB. EX1029 at 19 ("The proper construction of 'baseband unit' to a POSITA is 'a unit that manages baseband communications between an operator network and one or more digital remote units.'")

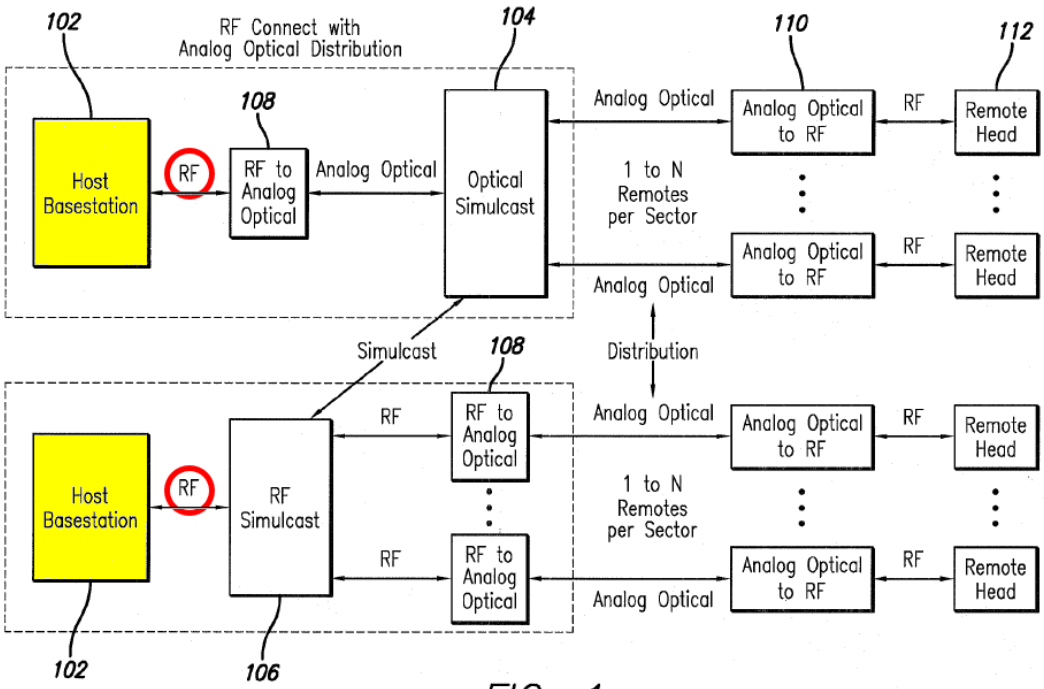

FIG. 1
PRIOR ART

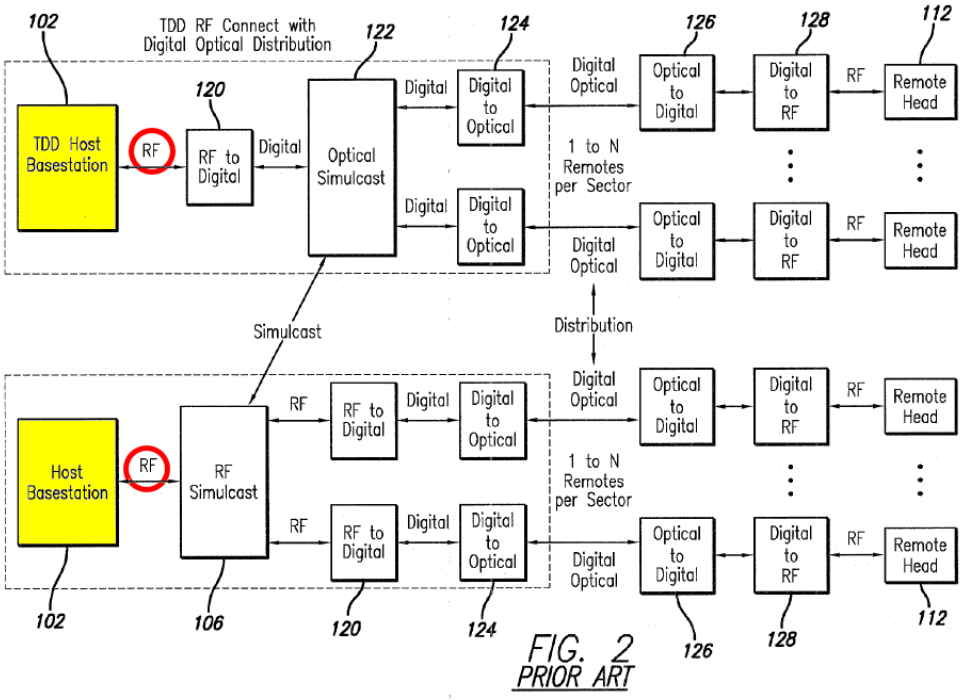

FIG. 2
PRIOR ART

Many other background references illustrate the other class of analog base stations that provides RF signals. EX-1030 at 6:48-51 ("The digital hub converts the uplink data back to analog RF signals which then get passed on to the appropriate base stations (BTS)."); EX-1022 ¶0009 ("In most cases, the signal that is distributed over the transmission links is likely to be analog (either direct radio carriers or frequency translated radio carriers)."); EX-1031 at 4:23-26 ("In one direction of communication, DART module 208 receives an incoming analog RF signal from base station 103…"); EX-1033 ¶0005 ("In what is referred to herein as the 'standard DAS architecture' (or just DAS for short) …. The DAS head end receives its input from one or more traditional BTSs. More specifically, the traditional BTS includes an RF modulation subsystem (RF module) that converts the input baseband signals from the network into passband signals on RF carriers.").

289. Wu teaches to include conversion circuit (downconverters and analog to digital converters) in the central unit when communicating with an analog RF base station to convert the analog RF base station signals to digital baseband format before distribution at baseband. EX-1005 at Fig. 6, ¶0049, ¶¶0054-0055; *see also* Ground 1, Element 1B (discussing Wu). A POSITA would have found it obvious to modify Hettstedt CMU to include conversion circuity.

290. *Motivation*. A POSITA would have been motivated to make this modification to make Hettstedt's system *compatible with conventional base stations (analog RF base station)*. Relatedly, a POSITA would have been motivated to make Hettstedt's system compatible to *(1) maximize deployment flexibility and (2) decrease cost*. Without this modification, Hettstedt's could only be narrowly deployed in buildings with digital base stations. With this modification, Hettstedt's system could be broadly deployed in building with either digital or analog base stations. The modification also saves cost. Without this modification, the installer would need to incur the cost of installing new digital base stations to replace the existing conventional analog RF base stations before Hettstedt's system can be deployed. With this modification, no such costs are necessary because the CMU would be compatible with existing analog RF base stations.

291. I note that maximizing deployment flexibility and decreasing costs were well-known motivations. Multiple references discuss the need to support both analog RF and digital baseband inputs. EX-1022 ¶0009 ("A typical deployment scenario for the present invention may include a mixture of analog, digitized radio and baseband digital links."); EX-1031 4:23-26, 8:64-67("In one direction of communication, DART module 208 receives an incoming analog RF signal from base station 103… Alternatively, any digital baseband protocol,

including standard and proprietary protocols, or any software defined radio interface could be used…."); EX-1032 at 11:10-15 ("In another embodiment of the Distributed Antenna System 220, one or more of the analog RF interfaces with the base station 24 may be replaced with interfaces that carry the uplink and downlink signals in a time division multiplexed frame digital format such as a Common Public Radio Interface (CPRI) or the Open Base Station Architecture Initiative (OBSAI) link."); EX-1033 ¶0010 ("A more versatile DAS architecture is needed to address these and other challenges of configuring and deploying wireless access infrastructures. Accordingly, various embodiments of the present invention provide a flexible DAS that can: support a wide and expandable array of transport technologies from the network side…"), ¶¶0005-0006. Multiple references discuss the need to reduce cost. EX-1032 at 1:52-53 ("In order to reduce the costs associated with the development of their communication systems…"); EX-1022 ¶0031("Features of the present invention include: the use of a switch matrix, which allows coverage and capacity to be allocated dynamically (thereby saving capital and operating costs compared to traditional DAS architectures)"); EX-1031 at 1:37-45 ("In addition to changes in technology, consumer demand for a particular service may change after a service is installed…these changes occur not infrequently, are costly and are often necessary to keep pace with competitors within the industry."); EX-1036 ¶0005-0007 ("While DAS systems are

advantageous in many aspects, they are limited in certain regards. … installation expense is relatively high.... As cellular usage increases there is a need to provide increased and cost effective capacity and coverage outdoors in dense urban areas, outdoor malls, or in business or academic campuses").

292. Hettstedt supports these motivations. Hettstedt teaches it is advantageous to provide a "cost-effective solution" where existing components are "re-used" (specifically, cabling). EX-1006 ¶0030. With this modification, Hettstedt's system, could re-use all the cabling between and CMU and radio heads and *additionally* re-use existing analog base stations instead of replacing them with digital base stations. Hettstedt also tries to achieve a "flexible" solution (¶0042). that provides "multi-functions for a broad scope of complex scenarios of operation, with multi-carrier, multi-service and multi-operator functions, and efficient data management" (¶0027). By this teaching, Hettstedt itself corroborates the known motivation to support deployment flexibility.

293. *Reasonable expectation of success*. A POSITA would have a reasonable expectation of success because this modification involves well-known standard components, e.g., an analog to digital converter (ADC) and downconverters.[10] ADCs and downconverters are off-the-shelf standard

[10] The background references identified above addressing analog RF base station thoroughly discuss ADCs. Down converters to shift analog signals to baseband are also well known, standard components. EX-1034 at 3:22-40.

components. This modification does not require changes to any of the CMU core management operations (e.g., assigning carriers) or how the CMU communicates with the radio heads. The background art evidences that ADC have been used in similar systems. EX-1026 at 5:10-14, 10:37-44 (disclosing a packet-based system using addressing and explain the use of converters within the main unit: "Further, a given physical-layer connection can be a combination of these or other types of links, and RF signals can be converted to and from other forms throughout each connection if desired…. Additional circuitry, while not shown, can be provided in DAS hub 26 between RAN interface 50 and packet-switched network interface 52, so as to facilitate communication of traffic between the two interfaces. Such additional circuitry could include, for instance, circuitry for converting between analog and digital signal forms, circuitry for converting between electrical and optical signal forms, or other circuitry now known or later developed.").

294. Second, as explained in Ground 5, Hettstedt teaches that the CMU comprises mapping functionality to map the carriers to the radio heads and functionality to activate/de-active the carriers as needs change over time. If Patent Owner disputes whether this is sufficient to disclose the limitations about the signal sets, Wu provides further disclosure. As already explained above, Wu teaches to use a routing policy that allows the radio resources to be arbitrary grouped into desired sets.

295. A POSITA would have found it obvious to combine Hettstedt with Wu's routing policy. Specifically, a POSITA would have found it obvious to implement Hettstedt's existing mapping functionality with Wu's routing policy. Hettstedt broadly teaches that any mapping "means" may be used (EX-1006 ¶0045), and Wu's routing policy is an example of means to map carriers to radio heads.

296. *Motivation*. A POSITA would have been motivated to make this modification to improves Hettstedt stated goals of (1) "flexible" management and (2) "efficient load balancing." EX-1006 ¶¶0042, 0026, 0044. This modification improves the flexibility of the how the CMU can manage the distribution of carriers because, as taught by Wu, it provides the ability to include rules/trigger to automatically respond as the circumstance changes (e.g., due to events or load) and provides "fine grained" control over the carriers. EX-1005 ¶0009, ¶0011, ¶¶0041-0047. Hettstedt itself recognizes an "automatic" system is desirable. EX-1006 ¶0028. Relatedly, this modification improves Hettstedt goal of efficient load balancing because, as taught by Wu, the routing policy can include triggers for automatic load balancing. EX-1005 ¶¶0044-0045.

297. *Reasonable expectation of success*. A POSITA would have a reasonable expectation of success because this modification involves standard components: a processor and memory. EX-1005 ¶0040. Wu's routing policy is

merely programmatic instructions stored in conventional memory that cause a conventional processor to configure the switch. EX-1005 ¶0040. Hettstedt already discloses an intelligent switch. EX-1006 ¶0042. A POSITA knows how program rules/triggers for a routing policy using well-known IF/THEN statements.

298. In summary, even if Hettstedt itself does not anticipate these claims, the combination of Hettstedt and Wu render these claims obvious.

B. Dependent Claims 4, 11, 16

299. These dependent claims recite a limitation about the subset sent to remote units including "at least some radio resources from the first signal source and at least some radio resources from the second signal source."

300. Hettstedt teaches to include a "complex matrix function to combine different base stations." EX-1006 ¶0042.

301. If this is insufficient, a POSITA would have found this limitation obvious in view of Wu. Wu teaches that the routing policy allow the radio resources to be routed "individually, collectively as shown, or in arbitrary groups"—arbitrary groups covers where the groups comprise some radio resources from the first and second signal source. EX-1005 ¶0049.

302. *Motivation & reasonable expectation of success*. A POSITA would have found it obvious to incorporate this teaching for the same reasons discussed for the independent claims, which identifies the motivation and reasonable

expectation of success for combining Wu's routing policy. Additionally, a POSITA would have been motivated to make this modification to enable base stations *to share radio heads* (by having the CMU send both their carriers to the same radio head), which *saves cost and avoid installing duplicate radio heads for each base station*. This motivation is particularly compelling where the same operator has multiple base stations. Hettstedt naturally implicates that scenario. Hettstedt gives the example of eight bastions, which naturally implicates the same operator having multiple base stations as there are not eight signigcant carriers in any one area in the United States. The significant carriers in any one area in the United States are, for example, AT&T, Verizon, T-Mobile, U.S. Cellular, and Dish.

303. It was well-known in the background art that it was advantageous to share infrastructure equipment. EX-1032 at 1:52-57 ("In order to reduce the costs associated with the development of their communication systems, multiple service providers often locate their base stations 24 at the same geographical point. The providers can then share such items as 55 antennas, antenna towers, primary power drops, land costs, and regulatory costs."); EX-1033 ¶0004 ("In addition, as wireless access infrastructures of different service providers tend to overlap more and more within smaller spaces, the ability to share common infrastructure offers cost and operational benefits to network owners and operators."), EX-1033

¶0010 ("A more versatile DAS architecture is needed to address these and other challenges of configuring and deploying wireless access infrastructures. Accordingly, various embodiments of the present invention provide a flexible DAS that can…enable different service providers to share a common wireless access infrastructure").

304. Hettstedt itself supports this modification. Hettstedt teaches that the CMU should provide for a "a *broad* scope of *complex* scenarios of operation" with "*multi*-carrier, *multi*-service and *multi*-operator function." EX-1006 ¶0027. A POSITA would recognize that such a broad scope covers allocating signals from multiple signals sources to the same radio head.

305. Therefore, the combination of Hettstedt and Wu render these claims obvious.

C. Dependent Claim 5

306. This claim recites: "wherein the baseband unit and at least one of the plurality of signal sources are part of a baseband controller." Hettstedt illustrates merging the CMU (baseband unit) and base station (signal source). Infra ¶276. If that is insufficient, Wu expressly teaches the baseband unit and signal source can be part of the same unit. *See* Ground 1 above. A POSITA would have found it obvious that Hettstedt CMU and base station can be part of the same unit.

307. *Motivation & reasonable expectation of success*. The petition already discusses the well-known motivations for placing components with the same unit. That same reasoning applies here. There is a reasonable expectation of success because placing existing components into a unit (e.g., a box) requires no inventive skill; the existing components can continue to perform the same functions in the same. The background art recognizes that base station components may be physically separate or collocated. EX-1007 at 9 ("Both parts may be physically separated (i.e., the RE may be close to the antenna, whereas the REC is located in a conveniently accessible site) or both may be co-located as in a conventional radio base station design."); EX-1005 ¶0034 ("For discussion purposes only BTS 240 can be considered to comprise multi-band transceiver 260 as illustrated. One should note that alternative configurations are possible while still falling within the scope of the inventive subject matter. For example, each BTS 240 can, itself, be transceiver 260 that is receptive to different bands, or could be remotely coupled to transceiver 260." (emphasis added)).

308. Therefore, the combination of Hettstedt and Wu render these claims obvious.

D. Dependent Claims 13 and 18

309. These dependent claims recite that (a) the signals sources providing a first and second "composite signals" and (b) the baseband unit forms the first set of radio resources from subsets from these composite signals.

310. As to part (b), this part is obvious for the same reasons discussed in Dependent Claims 4, 11, 16.

311. As to part (a), as already explained in Ground 5, Hettstedt teaches that the base stations (the *signal sources*) each provide four carriers, which can be combined. If this is not sufficient, a POSITA would have found these claims obvious in view of Wu. As already explained, Wu teaches base stations provide multiple carrier channels in the form of a composite signal and teaches these may be arbitrary grouped together. *See* Ground 1 above. A POSITA would have found it obvious that Hettstedt's base station similarly could provide their respective four carriers in the form of a composite signal (e.g., where the carriers are multiplex together).

312. *Motivation*. A POSITA would have been motivation to make this combination to reduce the numbers of cables/connectors needed for each base stations, which reduces costs and makes installation easier. When carriers are multiplexed together in a composite signal, the base station only requires one

cable/connection to deliver the carriers compared to a separate cable/connection for each carrier.

313. *Reasonable expectation of success*. A POSITA would have reasonable expectation of success because it was well-known how to combine carriers together for transport over a cable (e.g., multiplexing). *E.g.*, EX-1007 at 34 (explaining how CPRI multiplexes multiple AxC signals together); EX-1034 at 5:66-6:46 ("As such, the present invention enables users to transport different bandwidths efficiently on a plurality of wideband channels, instead of having to transport equal amounts of bandwidth inefficiently on those channels. Specifically, referring to this illustrative example, it may be assumed that four different bandwidths are to be transported by system 100 depicted in FIG. 1… The outputs from A/D devices 202a-202d are coupled to a mapper/framer device 206 and a serializer device (not shown), which multiplexes or combines the separate bandwidth segments (A, B, C, D) and constructs a suitable frame 208 including the bandwidth segments for transport."). Wu also teaches how separate the carriers: using a splitter. EX-1005 ¶0011. Wu does not teach there is anything difficult about implementing a splitter, which a person of skill would understand to be a frequency demultiplexer to separate radio channels. There are well-known techniques to split carriers.

314. Therefore, the combination of Hettstedt and Wu render these claims obvious.

E. Dependent Claims 2-3, 9-10, 15, 19

315. As show in Ground 5, Hettstedt discloses the limitations; no further combination is needed beyond the independent claims already discussed.

XIII. Ground 7: Hettstedt plus Sabat '552 renders obvious claims 6-7, 12, 17

Claims 6-7, 12, 17:

> "**wherein the baseband unit further comprises at least one interface to communicatively couple the baseband unit to one or more additional baseband units.**"
>
> **"receiving at the baseband unit, from at least one additional baseband unit, a second plurality of radio resources."**
>
> **"The system of claim 6 wherein the one or more additional baseband units includes a plurality of additional baseband units, and the baseband unit is connected to at least a first one of the plurality of additional baseband units through a direct connection and at least a second one of the plurality of additional baseband units through an indirect connection."**

316. For the same reasons, motivations, and expectation of success addressed above with respect to Ground 3, it would have been obvious to provide a cable interface from one of Hettstedt's CMUs to another CMU (both by direct connection and by indirect connection) as taught by Sabat '552 to enable different base stations coupled to different CMUs to deliver their radio resources to

additional radio heads, reducing the need to duplicate radio heads and cabling as well as reducing costs by sharing radio heads among different operators.

Executed on: July 19, 2022

Dr. Anthony Acampora

Claims Listing Appendix

U.S. Patent No. 10,334,499
Claims 1-19

Designation	Claim 1
Element 1A	1. A system for transporting wireless communications, comprising:
Element 1B	a baseband unit;
Element 1C	a plurality of signal sources, including at least a first signal source and a second signal source;
Element 1D	a plurality of remote units, including at least a first remote unit and a second remote unit;
Element 1E	wherein the baseband unit comprises a plurality of interfaces to communicatively couple the baseband unit to the plurality of signal sources;
Element 1F	wherein the baseband unit is configured to receive a plurality of radio resources from the first signal source and the second signal source;
Element 1G	wherein the baseband unit is configured to send a digital representation of a first set of radio resources to the first remote unit at a first point in time, the first set of radio resources for transmission at an antenna of the first remote unit;
Element 1H	wherein the baseband unit is configured to send a digital representation of a second set of radio resources to the first remote unit at a second point in time, the second set of radio resources for transmission at the antenna of the first remote unit;
Element 1I	wherein a number of radio resources in the first set of radio resources is different from a number of radio resources in the second set of radio resources;

A1

Element 1J	and wherein the baseband unit is configured to receive digital signals from each of the plurality of remote units.
Claim 2	2. The system of claim 1 wherein the baseband unit is configured to packetize each digital representation of a radio resource.
Claim 3	3. The system of claim 1 wherein the digital representation of the first set of radio resources includes destination information identifying the first remote unit and the digital representation of the second set of radio resources includes destination information identifying the first remote unit.
Claim 4	4. The system of claim 1 wherein the first set of radio resources is a subset of the plurality of radio resources and includes at least some radio resources from the first signal source and at least some radio resources from the second signal source.
Claim 5	5. The system of claim 1 wherein the baseband unit and at least one of the plurality of signal sources are part of a baseband controller.
Claim 6	6. The system of claim 1 wherein the baseband unit further comprises at least one interface to communicatively couple the baseband unit to one or more additional baseband units.
Claim 7	7. The system of claim 6 wherein the one or more additional baseband units includes a plurality of additional baseband units, and the baseband unit is connected to at least a first one of the plurality of additional baseband units through a direct connection and at least a second one of the plurality of additional baseband units through an indirect connection.

Designation	**Claim 8**
Element 8A	8. A baseband controller for use in the transport of wireless communications, comprising:
Element 8B	a plurality of interfaces to communicatively couple a baseband unit to a plurality of signal sources, including at least a first signal source and a second signal source;

Element 8C	at least one interface to communicatively couple the baseband unit to a plurality of remote units, including at least a first remote unit;
Element 8D	wherein the baseband unit is configured to receive a plurality of radio resources from the first signal source and the second signal source;
Element 8E	wherein the baseband unit is configured to send digital representations of a first set of radio resources to the first remote unit at a first point in time, the first set of radio resources for transmission at an antenna of the first remote unit;
Element 8F	wherein the baseband unit is configured to send digital representations of a second set of radio resources to the first remote unit at a second point in time, the second set of radio resources for transmission at the antenna of the first remote unit; and
Element 8G	wherein a number of radio resources in the first set of radio resources is different from a number of radio resources in the second set of radio resources.
Claim 9	9. The baseband controller of claim 8 wherein the baseband unit is configured to packetize each digital representation of a radio resource.
Claim 10	10. The baseband controller of claim 8 wherein the digital representation of the first set of radio resources includes destination information identifying the first remote unit and the digital representation of the second set of radio resources includes destination information identifying the first remote unit.
Claim 11	11. The baseband controller of claim 8 wherein the first set of radio resources is a subset of the plurality of radio resources and includes at least some radio resources from the first signal source and at least some radio resources from the second signal source.
Claim 12	12. The baseband controller of claim 8 wherein the baseband unit further comprises at least one interface to communicatively couple the baseband unit to one or more additional baseband units.

Claim 13	13. The baseband controller of claim 8 wherein the plurality of radio resources include a first composite signal from the first signal source and a second composite signal from the second signal source, and the baseband unit is configured to form the digital representation of the first set of radio resources from a first subset of the first composite signal and a second subset of the second composite signal.

Designation	**Claim 14**
Element 14A	14. A method for providing digital signals in a Distributed Antenna System (DAS), comprising:
Element 14B	receiving at a baseband unit, from a plurality of signal sources including at least a first signal source and a second signal source, a plurality of radio resources;
Element 14C	transmitting from the baseband unit, at a first point in time, a digital representation of a first set of radio resources to a first remote unit, the first set of radio resources for transmission at an antenna of the first remote unit;
Element 14D	transmitting from the baseband unit, at a second point in time, a digital representation of a second set of radio resources to the first remote unit, the second set of radio resources for transmission at the antenna of the first remote unit;
Element 14E	wherein a number of radio resources in the first set of radio resources is different from a number of radio resources in the second set of radio resources.
Claim 15	15. The method of claim 14 wherein the digital representation of the first set of radio resources includes destination information identifying the first remote unit and the digital representation of the second set of radio resources includes destination information identifying the second remote unit.
Claim 16	16. The method of claim 14 wherein the first set of radio resources is a subset of the plurality of radio resources and includes at least some

	radio resources from the first signal source and at least some radio resources from the second signal source.
Claim 17	17. The method of claim 14 further comprising receiving at the baseband unit, from at least one additional baseband unit, a second plurality of radio resources.
Claim 18	18. The method of claim 14 wherein the plurality of radio resources include a first composite signal from the first signal source and a second composite signal from the second signal source, the method further comprising forming, at the baseband unit, the digital representation of the first set of radio resources from a first subset of the first composite signal and a second subset of the second composite signal.
Claim 19	19. The method of claim 14 further comprising packetizing, at the baseband unit, at least a subset of the plurality of radio resources.