OBSAI

OPEN BASE STATION ARCHITECTURE INITIATIVE

OPEN BASE STATION ARCHITECTURE INITIATIVE

BTS SYSTEM REFERENCE DOCUMENT
Version 2.0

Copyright 2006, OBSAI, All Rights Reserved.
Confidential & Proprietary Information

FOREWORD

OBSAI description and specification documents are developed within the Technical Working Group of the Open Base Station Architecture Initiative Special Interest Group (OBSAI SIG). Members of the OBSAI TWG serve voluntarily and without compensation. The description and specifications developed within OBSAI represent a consensus of the broad expertise on the subject within the OBSAI SIG.

The OBSAI SIG uses the following terminology in the specifications:

- "shall" expresses a provision that is binding
- "should" and "may" expresses non-mandatory provisions
- "will" expresses a declaration of purpose on the part of the OBSAI SIG. It may be necessary to use "will" in cases where the simple future tense is required

Use of an OBSAI reference or specification document is wholly voluntary. The existence of an OBSAI Specification does not imply that there are no other ways to produce, test, measure, purchase, market, or provide other goods and services related to the scope of the OBSAI Specification. Furthermore, the viewpoint expressed at the time a specification is approved and issued is subject to change brought about through developments in the state of the art and comments received from users of the specification. Every OBSAI Specification is subjected to review in accordance with the Open Base Station Architecture Initiative Rules and Procedures.

Implementation of all or part of an OBSAI Specification may require licenses under third party intellectual property rights, including without limitation, patent rights (such a third party may or may not be an OBSAI Member). The Promoters of the OBSAI Specification are not responsible and shall not be held responsible in any manner for identifying or failing to identify any or all such third party intellectual property rights.

The information in this document is subject to change without notice and describes only the product defined in the introduction of this documentation. This document is intended for the use of OBSAI Member's customers only for the purposes of the agreement under which the document is submitted, and no part of it may be reproduced or transmitted in any form or means without the prior written permission of OBSAI Management Board. The document has been prepared for use by professional and properly trained personnel, and the customer assumes full responsibility when using it. OBSAI Management Board, Marketing Working Group and Technical Working Group welcome customer comments as part of the process of continuous development and improvement of the documentation.

Copyright 2006, OBSAI, All Rights Reserved.
Confidential & Proprietary Information

The information or statements given in this document concerning the suitability, capacity, or performance of the mentioned hardware or software products cannot be considered binding but shall be defined in the agreement made between OBSAI members. However, the OBSAI Management Board, Marketing Working Group or Technical Working Group have made all reasonable efforts to ensure that the instructions contained in the document are adequate and free of material errors and omissions.

OBSAI liability for any errors in the document is limited to the documentary correction of errors. OBSAI WILL NOT BE RESPONSIBLE IN ANY EVENT FOR ERRORS IN THIS DOCUMENT OR FOR ANY DAMAGES, INCIDENTAL OR CONSEQUENTIAL (INCLUDING MONETARY LOSSES), that might arise from the use of this document or the information in it.

This document and the product it describes are considered protected by copyright according to the applicable laws. OBSAI logo is a registered trademark of Open Base Station Architecture Initiative Special Interest Group. Other product names mentioned in this document may be trademarks of their respective companies, and they are mentioned for identification purposes only. Copyright © Open Base Station Architecture Initiative Special Interest Group. All rights reserved. Users are cautioned to check to determine that they have the latest edition of any OBSAI Specification.

Interpretations: Occasionally questions may arise regarding the meaning of portions of standards as they relate to specific applications. When the need for interpretations is brought to the attention of OBSAI, the OBSAI TWG will initiate action to prepare appropriate responses. Since OBSAI Specifications represent a consensus of OBSAI Member's interests, it is important to ensure that any interpretation has also received the concurrence of a balance of interests. For this reason OBSAI and the members of its Technical Working Groups are not able to provide an instant response to interpretation requests except in those cases where the matter has previously received formal consideration.

Comments on specifications and requests for interpretations should be addressed to:

Peter Kenington

Chairman, OBSAI Technical Working Group

Linear Communications Consultants Ltd.

Email: pbk@linearcomms.com

Copyright 2006, OBSAI, All Rights Reserved.
Confidential & Proprietary Information

Contents

1 Summary of changes 13
2 Scope 15
3 Reference Architecture 16
3.1 Open Architecture Objectives 16
3.2 Architecture Overview 16
3.3 Architecture Configurations 18
3.4 Block Functional Specifications 19
3.4.1 Transport Block (TB) 20
3.4.2 Control and Clock Block (CCB) 23
3.4.3 Baseband Block 25
3.4.4 RF Block 42
3.4.5 General Purpose Block 46
3.4.6 Power System Unit (PSU) Block 48
3.5 OAM&P Principles and Architecture 48
3.5.1 Overview of OAM&P support 49
3.5.2 OAM&P Implementation Concept 50
3.5.3 OAM&P BTS Information Model 52
3.6 Addressing Principles 53
3.6.1 MAC Address Assignment 53
3.6.2 IP Address Assignment 55
3.6.3 IPv6 Address Assignment 55
3.6.4 IPv4 Address Assignment 56
3.6.5 Addressing Of Software Resources 56
3.7 Synchronization 57
3.8 BTS Start-up and Hot Insertion/Removal Principles 58
3.8.1 Concepts and Definitions 59
3.8.2 Principles for DA-based Implementation 60
3.8.3 Principles for DA-less Implementation 62
3.9 Redundancy and Availability Criteria 66
3.9.1 N+1 Redundancy 66
3.9.2 RP1 and RP2 Ethernet Redundancy Principles 66

Copyright 2006, OBSAI, All Rights Reserved.
Confidential & Proprietary Information

3.10 Mechanical and Dimensioning Requirements....68
3.10.1 Overview....68
3.10.2 Sealed Module Common Features (Excluding RF Modules)....71
3.10.3 Unsealed Module Common Features....76
3.10.4 RF Module Common Features....80
3.10.5 Rear Transition Module....80
3.11 Backplane....80
3.11.1 Data Connections....81
3.11.2 Power Connections....82
3.12 Module Power Interface....84
3.12.1 Module Supply Voltage....84
3.12.2 Module Supply Protection....85
4 Glossary....86
4.1 Abbreviations....86
4.2 Definition of Terms....89
5 References....92
5.1 American National Standards Institute (ANSI)....92
5.2 TIA/EIA....92
5.3 Telcordia....93
5.4 Underwriters Laboratory (UL)....93
5.5 Government....93
5.6 ITU....93
5.7 IEEE....93
5.8 IETF....94
5.9 3rd Generation Partnership Project (3GPP)....94
5.10 Other....95
Appendix A. Design Recommendations....97
A.1. Environmental Conditions....97
A.1.1. Operating Temperature And Humidity....97
A.1.2. Storage Temperature And Humidity....97
A.1.3. Altitude Requirements....97
A.2. Design and Construction Criteria....98
A.2.1. Maintainability Criteria....98

Copyright 2006, OBSAI, All Rights Reserved.
Confidential & Proprietary Information

A.2.2. Safety and Fail-safe Operation 99
Appendix B. Specification for HARD-Metric Vertical Male Connector 100
B.1. Scope 100
B.2. General Description 100
B.3. Electrical Specification 101
B.4. Mechanical Specification 102
B.5. Environmental Requirement 102
B.5.1. Environment Specification For Operation 103
B.5.2. Environment Specification For Transportation 105
B.6. Coding 105
B.6.1. Coding 0 105
B.6.2. Coding 1 105
B.6.3. Coding 2 106
B.6.4. Coding 3 106
B.7. PCB Layout 107
B.8. Specification Drawings 108
B.8.1. Male Connector 108
B.8.2. Male Connector With Endwall 110
B.9. Male Connector With Guidance 111
B.9.1. Available Pin Type(s)/Length(s) 112
B.9.2. Coding Pin 113
B.9.3. Guide Pin 114
B.10. Reference Documents 115
Appendix C. Hard-Metric 2MM 6-Row Daughterboard Receptacle 116
C.1. Summary of changes 116
C.2. Scope 117
C.3. General Description 117
C.4. Electrical Specification 118
C.5. Mechanical Specification 118
C.6. Environmental Requirement 119
C.6.1. Environment specification for operation 120
C.6.2. Environment Specification For Transportation 122
C.7. Coding 122

Copyright 2006, OBSAI, All Rights Reserved.
Confidential & Proprietary Information

C.7.1. Coding 0 122
C.7.2. Coding 1 122
C.7.3. Coding 2 122
C.7.4. Coding 3 123
C.8. PCB Layout 123
C.9. Specification Drawings 126
C.9.1. Female PIHR Connector....126
C.9.2. Female PIHR Connector With Guidance 127
C.9.3. Female Press-fit Connector 128
C.9.4. Female Press-Fit Connector With Guidance 129
C.10. Reference Documents 130
Appendix D. HARD-Metric Right Angled Male Power Connector Specification 131
D.1. Summary of changes....131
D.2. Scope 131
D.3. General Description....132
D.4. Electrical Specification....132
D.5. Mechanical Specification 133
D.6. Environmental Requirement 133
D.6.1. Environment Specification For Operation 133
D.6.2. Environment Specification For Transportation....135
D.7. Pin Types and Contact Loading....136
D.7.1. Pin Types....136
D.7.2. Contact Loading....136
D.8. PCB Layout 138
D.9. Specification Drawings 139
D.9.1. Male Pressfit Connector 139
D.9.2. Male PIHR Connector....141
D.10. Reference Documents 143
Appendix E. HARD-Metric Straight Female Power Connector Specification144
E.1. Summary of changes....144
E.2. Scope 144
E.3. General Description....145
E.4. Electrical Specification....145

Copyright 2006, OBSAI, All Rights Reserved.
Confidential & Proprietary Information

E.5. Mechanical Specification 146
E.6. Environmental Requirement 146
E.6.1. Environment Specification For Operation 146
E.6.2. Environment Specification For Transportation 147
E.7. PCB Layout 149
E.8. Specification Drawings 150
E.9. Reference Documents 151

Copyright 2006, OBSAI, All Rights Reserved.
Confidential & Proprietary Information

List of Figures

Figure 3.2-1 BTS Reference Architecture....17
Figure 3.3-1 BTS Module Configuration Options....19
Figure 3.4-1 Example of Implementation of Module in Proprietary Block....47
Figure 3.5-1 Network Management Hierarchy....49
Figure 3.5-2 OAM&P BTS Internal Interface Architecture....51
Figure 3.5-3 OAM&P BTS Internal Interface Architecture for Indirect Interface....52
Figure 3.5-4 OBSAI Management Protocol Stack....53
Figure 3.6-1 IEEE 802 based global MAC address....54
Figure 3.6-2 MAC address based on HW position....54
Figure 3.6-3 IPv6 address interface ID....56
Figure 3.7-1 Synchronization Hierarchy....58
Figure 3.10-1 Sealed Module Perspective Views....70
Figure 3.10-2 Unsealed Module Perspective View....70
Figure 3.10-3 Module Depth Reference Dimension....71
Figure 3.10-4 Sealed Module Dimensions, Side View....72
Figure 3.10-5 Sealed Module Dimensions, Top View....73
Figure 3.10-6 Sealed Module Dimensions, Front View....74
Figure 3.10-7 Sealed Module Dimensions, Rear View....75
Figure 3.10-8 Unsealed Module Dimensions, Side View....77
Figure 3.10-9 Unsealed Module Dimensions, Top View....77
Figure 3.10-10 Unsealed Module Dimensions, Top Detail....77
Figure 3.10-11 Unsealed Module Dimensions, Front View....79
Figure 3.10-12 ESD Strip Schematic and Dimensions....80
Figure B-1 2mm Straight Male Connector 144 Pin with Guide and Coding Block100
Figure B-2. Male Connector With Guidance And Coding 1....105
Figure B-3. Male Connector With Guidance And Coding 2....106
Figure B-4. Male Connector With Guidance And Coding 3....106

Copyright 2006, OBSAI, All Rights Reserved.
Confidential & Proprietary Information

Figure B-5. Lay Out Drawing For 144 Pin Male Press-Fit Connector With Guidance 107

Figure B-6. Layout Drawing For 144 Pin Male Press-Fit Connector Without Guidance 107

Figure B-7. Male Connector 108

Figure B-8. Male Connector With Endwall.....110

Figure C-9. Male Connector With Guidance.....111

Figure B-10. Available Pin Length(S) 112

Figure B-11. Coding Pin 113

Figure B-12. Guide Pin.....114

Figure C-1. 2mm Right Angle Female, 144pin Version With Guide And Coding Block.....117

Figure C-2. Female Connector With Guidance And Coding 1 122

Figure C-3. Female Connector With Guidance And Coding 2 123

Figure C-4. Female Connector With Guidance And Coding 3 123

Figure C-5. Board Layout For 144 Pin Female Press-Fit Connector With Guidance 124

Figure C-6. Board Layout For 144 Pin Female Press-Fit Connector Without Guidance 124

Figure C-7. Layout Drawing For 144 Pin Female PIHR Connector With Guidance 125

Figure C-8. Board Layout For 144 Pin Female PIHR Connector Without Guidance 125

Figure C-9. Female PIHR Connector Without Guidance 126

Figure C-10. Female PIHR Connector With Guidance 127

Figure C-11. Female Press-Fit Connector Without Guidance 128

Figure C-12. Female Press-Fit Connector With Guidance 129

Figure D-1 Right Angle Male, 4-Pin.....132

Figure D-2. Pin Lengths For Male Connector 136

Figure D-3. OBSAI Sequenced Preferred.....136

Figure D-4. OBSAI Non-Sequenced Alternative.....137

Figure D-5. Board Layout For Male Connector Press-Fit / PIHR, 4-Pin.....138

Copyright 2006, OBSAI, All Rights Reserved.
Confidential & Proprietary Information

Figure D-6a. Male Connector Pressfit, 4-Pin 139
Figure D-6b. Male Connector Pressfit, 4-Pin 140
Figure D-6c. Male Connector Pressfit, 4-Pin 140
Figure D-7a. Male Connector PIHR, 4-Pin 141
Figure D-7b. Male Connector PIHR, 4-Pin 142
Figure D-7c. Male Connector PIHR, 4-Pin.....142
Figure E-1. Straight Female Connector, 4-Pin.....145
Figure E-2. Board Layout For Female Connector Press-Fit, 4-Pin 149
Figure E-3. Female Connector Press-Fit, 4-Pin.....150

Copyright 2006, OBSAI, All Rights Reserved.
Confidential & Proprietary Information

List of Tables

Table 3.3-1 Base Transceiver Station Configuration Options.....19

Table 3.4-2 WiMAX Profiles for Initial Certification .. **Error! Bookmark not defined.**

Table 3.4-3 WirelessMAN OFDM Symbol Parameters**Error! Bookmark not defined.**

Table 3.4-4 Mandatory Channel Coding.....38

Table 3.4-5 Data Rates Achieved at Various Bandwidths 39

Table 3.4-6 Summary of Radio Profile Characteristics for 3G Standards.....43

Table 3.11-1 Sequenced Connector Pin Characteristics For P1 83

Table 3.11-2 Sequenced Connector Pin Characteristics For P2 83

Table 3.11-3 Non-Sequenced Connector Pin Characteristics For P2.....83

Table 3.12-1 -48 VDC Supply Voltage Requirements 84

Table 3.12-2 +24 VDC Supply Voltage Requirements 85

Table 3.3-1 Base Transceiver Station Configuration Options.....19

Table 3.4-1 Mandatory Channel Coding.....38

Table 3.11-1 Sequenced Connector Pin Characteristics For P1 83

Table 3.11-2 Sequenced Connector Pin Characteristics For P2 83

Table 3.11-3 Non-Sequenced Connector Pin Characteristics For P2.....83

Table 3.12-1 -48 VDC Supply Voltage Requirements 84

Table 3.12-2 +24 VDC Supply Voltage Requirements 85

Copyright 2006, OBSAI, All Rights Reserved.
Confidential & Proprietary Information

1 Summary of changes

Version	Changed Item	Date
0.01	Document started	10/19/02
1.0	Document released to MB	10/17/03
1.1	Changes to mechanics & dimensioning	05/01/04
1.1	Inserted revised appendices B&C	5/10/04
1.1	Added configuration options	5/15/04
1.1	Added new architecture figure with RP4 and added RP4 description	5/15/04
1.1	Addressing principles added	5/20/04
1.1	Appendix D, E added	6/26/04
1.1	Replaced “shall” with “should” in Appendix A	7/8/04
1.1	Fixed formatting errors in Appendix D, E. Fixed dimensioning errors on p108/109. Removed highlight from text pp43, 44.	11/10/04
1.1	Moved text in Section 3.11 to 3.4.6, Power Interface	12/14/04
1.2	Changed references of PM to GPM. Changed section 3.4.6 to refer to system power only. Redrew figures in section 3.6.1.1 and 3.6.1.2. Added back (edited) section 3.11 about module power requirements.	1/16/05
1.2	Complete revision of 3.8: Start-up Principles	3/7/05
2.0	Added IEEE802.16 / WiMAX references to Sections 2.0, 3.2, 3.3	10/1/05
2.0	Added section 3.4.3.4 for IEEE802.16/WiMAX functional support	10/1/05
2.0	Removed references to RP4 as an OBSAI interface	12/20/05
2.0	Replace “Proprietary Module” with “General Purpose Module” in section 3.4.5	12/20/05
2.0	Changed references to Iub and Abis interfaces to “Network Interface” as appropriate	12/20/05

Copyright 2006, OBSAI, All Rights Reserved.
Confidential & Proprietary Information

Version	Changed Item	Date
2.0	Updated baseband and RF module descriptions in WiMAX section Approved by Management Board	27-Apr-06

Copyright 2006, OBSAI, All Rights Reserved.
Confidential & Proprietary Information

2 Scope

The OBSAI family of specifications provides the architecture, function descriptions and minimum requirements for integration of a set of common modules into a base transceiver station (BTS). As a minimum, the BTS will have the capability to be configured from a set of common modules in order to support one or more current or future wireless network access standards as described herein. The technical requirements contained in the OBSAI family of specifications form an interface specification to ensure compatibility and interoperability among and between the set of common modules. The requirements do not address the quality or reliability of service of the access standards, nor do they cover measurement procedures.

This document describes the following:

- Reference architecture and common functional blocks
- Functions performed by each module in the common set of modules
- Relationships between modules and functions
- Module form, fit and dimensioning
- Physical and logical interfaces between the modules for the transport of signaling and user data between modules
- System growth and expansion capabilities
- Supported network interfaces such as Iub for 3GPP and Abis interface for 3GPP2
- Supported external interfaces to User Equipment (UE).
- Configurability to support different access technologies such as GSM/EDGE, CDMA2000, WCDMA or IEEE802.16/WiMAX.
- Interchangeability criteria
- Redundancy provisions for different access technologies
- Operation, administration, management and provisioning (OAM&P) criteria
- Safety and fail-safe operation

This approach to writing the set of compatibility specifications is intended to provide the BTS integrator with sufficient flexibility to respond to differences in access technologies, configurations, reliability, capacity, etc. Furthermore, it defines the architecture with the flexibility to integrate future capabilities that cannot be defined at this time.

Copyright 2006, OBSAI, All Rights Reserved.
Confidential & Proprietary Information

3 Reference Architecture

3.1 Open Architecture Objectives

The general principles guiding the definition of the architecture and interfaces for the open base transceiver station (BTS) are the following:

- Define an open, standardized internal modular structure of wireless base stations.
- Define a set of standard BTS modules with specified form, fit and function such that BTS vendors can acquire and integrate modules from multiple vendors in an OEM fashion.
- Define open, standards-based digital interfaces between BTS modules based on a logical model of the entity controlled through the interfaces.
- Define open, standards-based interfaces to assure interoperability and compatibility between BTS modules.
- Define an open, standardized interface for exchange of clock and synchronization signals that meet the timing, frequency stability, phase noise and jitter constraints of supported air interfaces.
- Define a set of standard OAM&P principles for integration of multiple modules from multiple vendors into a functioning base station.
- Define the internal modular structure for the base station to allow scalability for small to large capacity configurations.
- Define the internal modular structure for the base station to support concurrent operation with different air interface standards.

3.2 Architecture Overview

Figure 3.2-1 shows the reference architecture for the OBSAI base transceiver station (BTS) reference architecture. The architecture elements consist of the following:

- Functional blocks consisting of the Transport Block, Control and Clock Block, Baseband Block and RF Block. A block represents a logical grouping of a set of functions and attributes. A block may consist of one or more modules, each of which represents a physical implementation of a subset of the block functions.

Copyright 2006, OBSAI, All Rights Reserved.
Confidential & Proprietary Information

- External network interface. Examples are: (Iub) to the Radio Network Controller (RNC) for 3GPP systems, (Abis) to the Base Station Controller (BSC) for 3GPP2 systems, R6 to ASN GW (centralized GW) or R3 to CSN (distributed GW) for 802.16/WiMAX system.
- External radio interface. Examples are Uu or Um to the User Equipment (UE) for 3GPP systems (i.e., GSM or WCDMA), Um for 3GPP2 systems (i.e., CDMA) or R1 for IEEE802.16/WiMAX.
- Internal interfaces between BTS functional blocks designated as Reference Point 1 (RP1), Reference Point 2 (RP2), Reference Point 3 (RP3). RP1 includes control data and clock signals to all blocks. RP2 provides transport for user data between Transport Block and Baseband Block. RP3 provides transport for air interface data between Baseband Block and RF Block. RP4 provides the DC power interface between the internal modules and DC power sources.

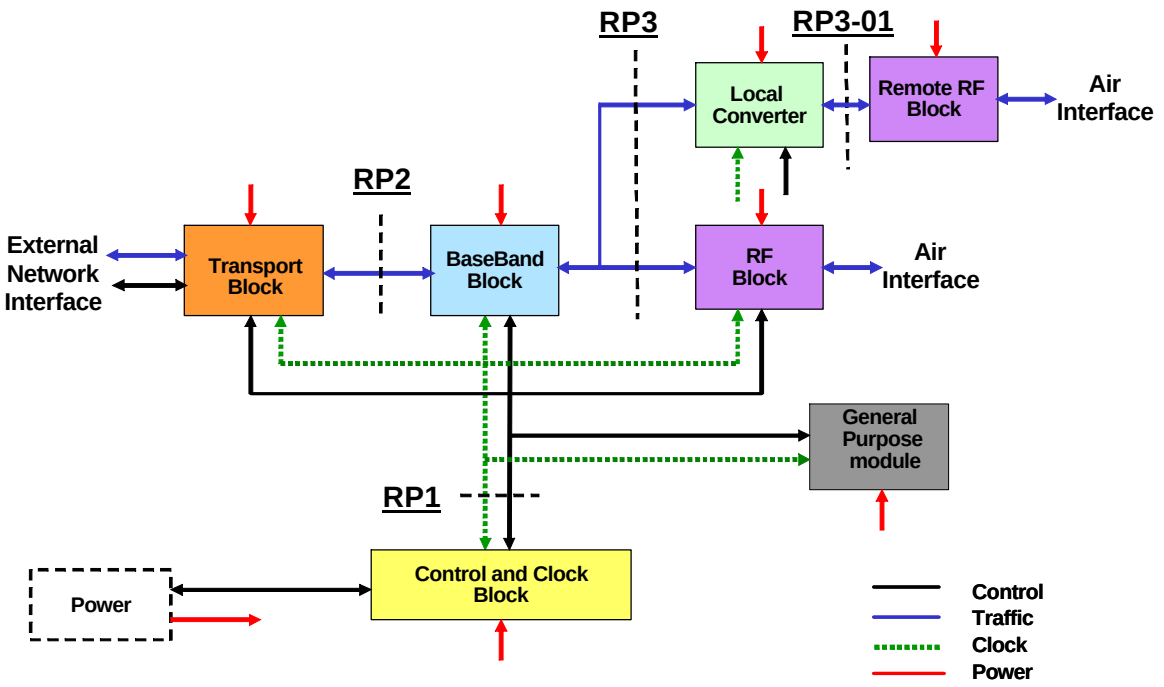

Figure 3.2-1 BTS Reference Architecture

External Network Interfaces. The external network interface to the RNC, BSC or ASN-GW provided by the Transport Block shall transport user data and control data over a suitable communications path such as T1, E1, DS3, OC1, OC3, Ethernet, or DSL. For 3GPP systems, the logical interface is designated by the Iub described in 3GPP Series 25.4xx specifications. GSM/EDGE specifications are given in Series 3GPP/04.xxx and 05.xxx for air interface and 08.xxx for transport

Copyright 2006, OBSAI, All Rights Reserved.
Confidential & Proprietary Information

interface. For 3GPP2 systems the logical interface is specified by the Abis interface in TIA/EIA IS-828-A specifications.

The external interface to the UE transports user data and signaling data over the air interface. For 3GPP systems, the logical interface to UE is specified by the Uu described in 3GPP Series 26.4xx specifications. For 3GPP2 systems the logical interface to UE is specified by the Um described in IS-2000 specifications. For IEEE802.16/WiMAX the interface to the Access Terminal is specified in the IEEE802.16 -2004 and IEEE802.16e specifications.

Block Structure. Each block in the reference architecture of Figure 3.2-1 represents a logical separation of BTS functions in protocol processing. A block may consist of one or more modules that execute a subset of block functions. A module represents a physical realization of block functions.

Reference Point Function Reference Point 1 (RP1) interchanges control, performance, status, alarm and provisioning data between the Control and Clock block and other BTS blocks with the protocol specified in the OBSAI RP1 Specification document. RP1 also defines an open, standardized interface for exchange of clock and synchronization signals that meet the timing, frequency stability, phase noise and jitter constraints of supported air interfaces. The interface employs a common clock rate for generation of system clock signals for all blocks and modules within each block.

Reference Point 2 (RP2) interchanges user data packets between the Transport Block and the Baseband Block with the protocol specified in the OBSAI RP2 Specification document.

Reference Point 3 (RP3) interchanges formatted air interface user and signaling data user between the Baseband Block and the RF Block with the protocol specified in the OBSAI Reference Point 3 Specification.

3.3 Architecture Configurations

Table 3.3-1 and Figure 3.3-1 illustrates different configurability options supportable for the reference point interfaces for GSM/EDGE, CDMA2000, WCDMA and IEEE802.16/WiMAX. Based on the configuration option ranges, the following maximum constrains apply: (a) 31 RP1 ports per TM; (b) 9 RP3 ports per BBM; (c) 12 RP3 ports per RFM. Not all possible combinations listed in Table 3.3-1 are allowable, however.

Copyright 2006, OBSAI, All Rights Reserved.
Confidential & Proprietary Information

Table 3.3-1 Base Transceiver Station Configuration Options

		GSM/EDGE	WCDMA	CDMA	WiMAX
Frequency band(s)		800,900,1800, 1900	1800,1900, 2100	800,1900, 2100	2.5, 3.5, 5.8 GHz
Number of carriers/sec		1…..16	1…4	1….15	1…15
Number of sectors		1-6	1-6	1-6	1-6
Transport Modules		1-2	1-2	1-2	1-2
Control & Clock Modules		1-2	1-2	1-2	1-2
Baseband Modules		1-12	1-6	1-12	1-12
RF Modules		1-9	1-9	1-9	1-9
Antennas /sector	Regular	2-4	2-4	2-4	2-4
	Smart Antenna	4-8	4-8	4-8	4-8

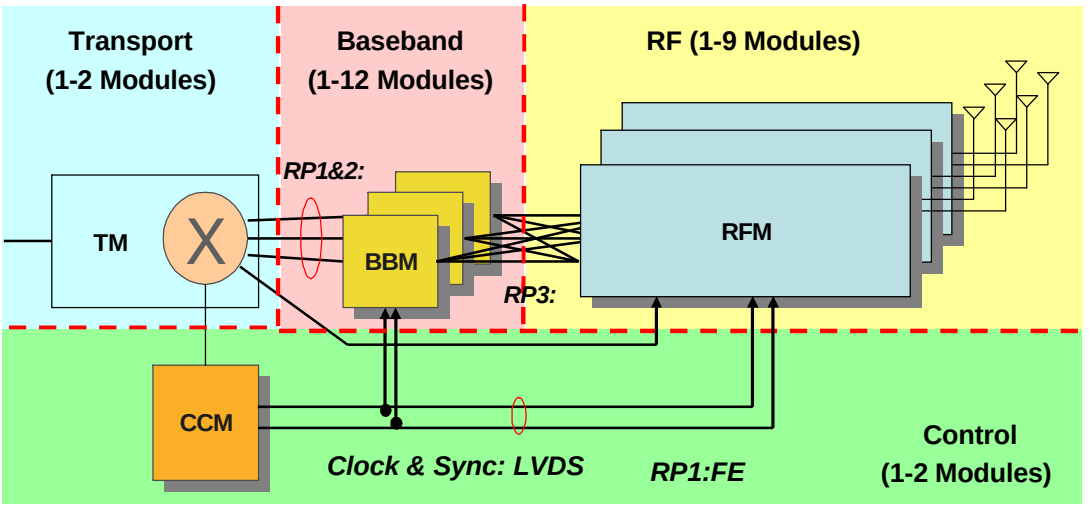

Figure 3.3-1 BTS Module Configuration Options

3.4 Block Functional Specifications

The OBSAI incorporates the following BTS functional blocks:

- Transport Block (TB)
- Control and Clock Block (CCB)
- Baseband Block (BB)

Copyright 2006, OBSAI, All Rights Reserved.
Confidential & Proprietary Information

- RF Block (RFB)
- Optional General Purpose Block

Each block consists of one or more modules based on access technology, configuration and reliability implementations.

3.4.1 Transport Block (TB)

The Transport Block consists of one or more modules that perform the functions described below. The Transport Block shall provide the capability for concurrent operation of two or more air interface standards as described herein. Each module shall provide one or more Network Interface(s) at the front panel. The OBSAI BTS shall have the capability to add a Transport Block module without powering down the BTS. Redundancy requirements of the Transport Block are defined in Section 3.9.

3.4.1.1 Transport Function List

The following lists the functions performed by the Transport Block:

- External Network Interface Functions
- Internal Networking Functions
- QoS Functions
- Network Interface Protocol Termination
- Synchronization Functions
- OAM&P Functions
- Security Functions

3.4.1.2 Transport Function Descriptions

3.4.1.2.1 External Network Interface

The Transport Block interfaces to external systems (RNC / BSC / ASN-GW or CSN) via the Network Interface and to BTS internal functional blocks via interfaces defined by the OBSAI Reference Point 1 Specification and the OBSAI RP2 Specification. The Transport Block shall perform interworking function between external network interface and the RP1 and RP2 interfaces. The types of Network Interfaces supportable by the Transport Block consist of, but shall not be limited to, the following:

- ATM / IMA over (Nx) E1 / T1 / J1
- IP over PPP / MP over (Nx) E1 / T1 / J1
- IP over PPP / MP over (Nx) ATM over E1 / T1 / J1
- IP over ATM / IMA over (Nx) E1 / T1 / J1
- ATM over E3 / T3
- IP over PPP over E3 / T3
- IP over ATM over E3 / T3

Copyright 2006, OBSAI, All Rights Reserved.
Confidential & Proprietary Information

- ATM over SDH STM-1 / SONET OC-3
- IP over ATM SDH STM-1 / SONET OC-3
- IP over ATM SDH STM-1 / SONET OC-3
- ATM over HDSL / SDSL / SHDSL / VDSL
- IP over ATM over HDSL / SDSL / SHDSL / VDSL
- IP over Ethernet 10Base-T/100Base-T/1000Base-T

The Transport Block shall support multiple Network Interfaces to enable various RAN / BSS topologies (e.g. star, chain, and ring) without the need for other equipment. Depending on the transport technology, this function refers to ATM multiplexing / cross-connection / switching or IP routing. The number and type of those Network Interfaces is not specified.

Upper protocol layers (Radio Network Layer, RNL) may be RAN / BSS vendor proprietary or defined by standardization bodies dedicated to the specification of RAN / BSS network interface functions (e.g. 3GPP Iub NBAP and FP, 3GPP2 Abis). The Transport Block shall support only Transport Network Layer (TNL) functions. It shall not perform any RNL related tasks. In particular the Transport Block shall not terminate any RNL related protocols. All RNL traffic (User Plane, Control Plane and Management Plane) is passed transparently through the Transport Block, but shall be handled according to associated QoS attributes.

In case the Network Interface is ATM based, the Transport Block shall terminate the ATM and AAL layers and support an ATM-IP-Interworking Function (AIIWF). The AIIWF shall be linked to the TNL Resource Management Function located at the Control and Clock Block.

Depending on the Network Interface, the following protocol terminations shall apply:

- If the Transport Block supports low-capacity Network Interfaces (e.g. E1 / T1 / J1), the Transport Block shall support inverse multiplexing techniques:
- If the Transport Block supports PPP Multilink Protocol (MP), the Transport Block shall use [RFC 1990]
- If the Transport Block supports Inverse Multiplexing for ATM (IMA), the Transport Block shall use [af-phy-0086.001]
- If the Transport Block supports Multi-Class Extension to Multi-Link PPP (MCMP), the Transport Block shall use [RFC 2686]
- If the Transport Block supports Differentiated UBR (DiffUBR), the Transport Block shall use [af-tm-add]
- If the Transport Block supports IP header compression techniques, the Transport Block shall use [RFC 2507], [RFC 2508] and [RFC 2509] (PPP mapping).
- If the Transport Block supports IP packet scheduling and prioritization using the principles of Differentiated Services

Copyright 2006, OBSAI, All Rights Reserved.
Confidential & Proprietary Information

(DiffServ), the Transport Block shall use [RFC 2474], [RFC 2475], [RFC 3086], [RFC 2597], [RFC 2598] and [RFC 3140].

3.4.1.2.2 Internal Networking Functions

The Transport Block shall convey following types of information between the Network Interface and the RP1 and RP2 Interfaces:

- User Plane data (U-Plane) via RP2
- Control Plane data (C-Plane) via RP1
- Management Plane data (M-Plane) via RP1

If the Network Interface is IP based (depending on RAN / BSS standard version), the Transport Block shall act as an IP router between those interfaces.

RP1 and RP2 interfaces to the Transport Block shall use a single transport infrastructure built upon well-known LAN technologies, namely Ethernet and IP. Detailed characteristics of the RP1 and PR2 Interfaces are defined by the OBSAI Reference Point 1 Specification and OBSAI Reference Point 2 Specification.

The Transport Block shall support communication between other BTS blocks via RP1. The Ethernet switching function shall be part of the Transport Block. For details, refer to the OBSAI Reference Point 1 Specification.

Addressing principles for RP1 and RP2 are defined in the OBSAI Reference Point 1 Specification and the OBSAI Reference Point 2 Specification.

3.4.1.2.3 QoS Functions

The Transport Block shall maintain Quality-of-Service on the TNL based on the requirements set by the RNL. This function shall implement the established throughput, delay, delay variation and drop rate limits. It shall include packet fragmenting and reassembly. It may include multiple-link-multiplexing/demultiplexing if necessary to meet throughput and delay requirements. It may also include congestion management, prioritization and resource reservation.

The latency (delay) introduced by the Transport Block (Network Interface to RP1 and RP2 Interfaces and Network Interface to Network Interface) shall not exceed 1ms.

Ethernet switching shall be supported between modules interfaced to RP1 and RP2 Interfaces. The delay between any two Ethernet-switched interfaces shall not exceed 100μs.

3.4.1.2.4 Synchronization Functions

The Transport Block shall provide synchronization information, such as clock signal and Synchronization Status Messages (SSM) extracted

Copyright 2006, OBSAI, All Rights Reserved.
Confidential & Proprietary Information

from ingress Network Interface(s), for further processing at the Control and Clock Block to derive synchronization and clock signals when synchronous backhaul links are used.

In addition, the Transport Block shall be able to synchronize the egress Network Interface(s) based on the following:

- A clock signal recovered from a selected ingress Network Interface
- A clock signal received from the Control and Clock Block
- A free-running clock

3.4.1.2.5 OAM&P Functions

The Transport Block shall conform to the BTS system level OAM&P architecture which is defined in Section 3.5. Additional details specific to this block are available in the OBSAI Transport Module Specifications.

3.4.1.2.6 Security Functions

The Transport Block may provide Security functions for OAM&P messages, control plane (C-Plane) messages and user plane (U-Plane) messages communicated over network interfaces. If supported, the Transport Block shall terminate a secure tunnel using IPSec techniques where the payload information can be routed further to its destination (e.g. the Control and Clock Block).

These functions include the following:

- Access control
- Connectionless integrity
- Data origin authentication
- Rejection of replayed packets
- Confidentiality (encryption)

3.4.2 Control and Clock Block (CCB)

The Control and Clock Block is the primary control processor for the BTS. The CCB shall control BTS resources, supervise all BTS activities, monitor BTS status and report BTS status and performance data.

The Control and Clock Block shall consist of one or more modules that perform the functions described below. The CCB shall provide the capability for concurrent operation of two or more air interface standards as described herein. The OBSAI BTS shall have the capability to add a Control and Clock Block module (CCM) without powering down the BTS.

Copyright 2006, OBSAI, All Rights Reserved.
Confidential & Proprietary Information

If the processing capacity of the Control and Clock Block is scalable or if the processing functions are capable of load sharing, the BTS shall be capable of adding or removing a second CCM without powering down the BTS.

Redundancy requirements of the Control and Clock Block are defined in Section 3.9

3.4.2.1 Control and Clock Block Function List

The following lists the functions performed by the Control and Clock Block:

- Congestion Control
- Admission Control
- BTS Level OAM&P Functions
- BTS Configuration Management and Control
- Radio Resource Management
- Multi-vendor Configurations
- RF Scheduling
- Network Interface (NI) Signaling Termination
- System Clock Generation and Distribution

3.4.2.2 Control and Clock Block Function Description

3.4.2.2.1 Congestion Control

The congestion control function in the CCB determines and reports the occurrence of Transport Block, Baseband Block or RF Block resource overload thresholds conditions in the BTS. The congestion control function determines corrective action needed to restore the system to a stable state.

3.4.2.2.2 Admission Control

The purpose of the admission control is to admit or deny new users, new radio access bearers or new radio links (for example, due to handover). The admission control should avoid overload situations and base its decisions on interference and resource measurements. The admission control is employed at, for example, initial UE access, RAB assignment/reconfiguration and at handover. These cases may give different results depending on priority and call loading.

The Serving RNC performs admission Control towards the network interface.

3.4.2.2.3 BTS Level OAM&P Functions

The Control and Clock Block shall conform to the BTS system level OAM&P architecture described in Section 3.5. Additional details

Copyright 2006, OBSAI, All Rights Reserved.
Confidential & Proprietary Information

specific to this block are available in the "Control and Clock Module Specifications".

3.4.2.2.4 Radio Resource Management

The Resource Management function shall allocate and de-allocate the BTS radio resources. This includes the following:

- Call admission control
- Transmit power allocation
- Channel element allocation/deallocation
- Walsh code allocation
- Data call admission control
- Radio channel rate setting
- Service mode setting
- Test channel elements
- Take channel elements out of service and return them to service
- Paging channel processing
- Processing of request and release messages for fundamental, supplemental, and control channels

3.4.2.2.5 Multi-Vendor Configurations

The Control and Clock Block shall provide the high-level interface to other BTS modules from various vendors. This function performs any interoperation function needed to allow the Control and Clock Module to communicate with Transport Modules, Baseband Modules and RF Modules from different vendors.

3.4.2.2.6 RF Scheduling

The Control and Clock Block shall perform RF scheduling functions.

3.4.2.2.7 Network Interface Signaling Termination

The Signaling Termination function terminates the backhaul signaling protocols.

3.4.2.2.8 System Clock Generation and Distribution

The System Clock Generation and Distribution function shall generate the clock signals needed by the BTS for each supported air interface and shall distribute the respective signals to the appropriate modules. This function shall perform clock monitoring, clock selection and clock switchover.

3.4.3 Baseband Block

The Baseband Block shall consist of one or more modules that perform baseband processing for the air interfaces that include, but are not limited to, those described below. The Baseband Block shall provide

Copyright 2006, OBSAI, All Rights Reserved.
Confidential & Proprietary Information

the capability for concurrent operation of two or more of the following air interface standards:

- 800 (GSM, CDMA2000)
- 900 (GSM)
- 1800 (GSM – Europe)
- 1800 (CDMA Korea)
- 1900 (GSM, WCDMA, CDMA2000)
- 2100 (WCDMA)
- 2300 (WiMAX)
- 2500 (WiMAX)
- 3500/3600 (WiMAX)
- 5800 (WiMAX – Unlicensed)

The OBSAI BTS shall have the capability to add or remove a Baseband module (BBM) without powering down the BTS.

Redundancy requirements of the Baseband Block are defined in Section 3.9.

3.4.3.1 Baseband block – GSM/EDGE Systems

For GSM systems the Baseband Block shall provide the common and dedicated channel functions in accordance with the GSM requirements of 3GPP. GSM/EDGE baseband algorithms are applied to logical and physical channels. Logical channels can be divided into traffic and signaling channels as described in 3GPP TS 05.01. A physical channel is defined as a sequence of TDMA (Time Division Multiple Access) frames at specific carrier, a time slot number (modulo 8) and a frequency hopping sequence.

3.4.3.1.1 GSM Function List

The following lists the functions performed by the Baseband Block when configured to support GSM/EDGE:

- Channel encoding/decoding
- Interleaving/de-interleaving
- Bit detection
- Frequency hopping
- Ciphering/deciphering
- DL diversity transmission (MIMO, etc.)
- UL diversity reception, IRC reception, SA reception
- Protocol frame processing

3.4.3.1.2 Channel Encoding/Decoding

This function performs GSM channel coding and decoding in accordance with 3GPP TS 05.03. Each logical channel has its own

Copyright 2006, OBSAI, All Rights Reserved.
Confidential & Proprietary Information

coding and interleaving scheme. The following sequence and order of operations is used:

- Information bits are coded with a systematic block code building words of information and parity bits
- These information and parity bits are encoded with a convolutional code
- Convolutionally encoded bits are then reordered and interleaved
- Block codes include Cyclic, Fire, and Reed Solomon codes. Block interleaving is used.

3.4.3.1.3 Bit Detection

Bit detection generates soft bits for channel decoding from user equipment (UE) uplink transmission. Intersymbol interference and other time varying channel disturbances must be taken care of by the bit detector. In the literature, there exist several algorithms for bit detection. Examples of bit detectors include adaptive linear and decision-feedback equalizers are given by Proakis.

3.4.3.1.4 Frequency Hopping

This function performs frequency hopping in accordance with 3GPP TS 05.02. In frequency hopping, time slots are sent according to a sequence of frequencies that are derived from an algorithm. The frequency hopping occurs between time slots and, therefore, an entire time slot is transmitted and received on a fixed frequency.

3.4.3.1.5 Ciphering/Deciphering

This function performs ciphering and deciphering in accordance with 3GPP TS 03.20. Data flow on the radio path is obtained by bit per bit binary addition of the user data flow and a ciphering bit stream, generated by algorithm A5. Ciphering is performed for channel encoded and interleaved data.

3.4.3.1.6 DL Diversity Transmission (MIMO, etc.)

The BB Block provides the capability to support modules that support diversity transmission from antenna configurations such as adaptive antenna arrays, orthogonal transmitter arrays, or Multiple Input, Multiple Output (MIMO) arrays.

3.4.3.1.7 UL Diversity Reception

Receiver performance can be improved by increasing the number of receiver antennas. Signals from different antennas can be combined using e.g. maximal ratio or interference rejection combining algorithms.

Copyright 2006, OBSAI, All Rights Reserved.
Confidential & Proprietary Information

3.4.3.1.8 Frame Protocol Processing

This GSM BB Block function performs TRAU frame protocol processing in accordance with 3GPP GSM specifications. For down-link traffic, the GSM BB module shall receive TRAU frames embedded in IP packets from the Transport Block via from RP2 and shall extract the TRAU frame from the IP packets. For the uplink direction, speech samples or raw data is processed at the baseband and framed according to the 3GPP specification as TRAU frames. The TRAU frames shall be embedded in IP packets and communicated to the Transport Block across RP2.

3.4.3.1.9 Messages To/From RP1

The GSM Baseband Block shall interface to the Control and Clock Block through Reference Point 1 (RP1) for the exchange of control, signaling, OAM&P and clock data in accordance with the requirements of the OBSAI Reference Point 1 Specification.

3.4.3.1.10 Messages To/From RP2

The GSM Baseband Block shall interface to the Transport Block through RP2 for the exchange of user data in accordance with the requirements of the OBSAI Reference Point 2 Specification.

3.4.3.1.11 Messages To/From RP3

The GSM Baseband block shall provide the capability to interface to the RF Block through RP3 for the exchange of over-the-air user and signaling data. Downlink/uplink messages with data and fast control information are sent from baseband/RF unit to RF/Transport Block.

3.4.3.2 Baseband Block - WCDMA Systems

For WCDMA systems the Baseband Block shall provide the common and dedicated channel functions in accordance with the WCDMA requirements of 3GPP TS 25.xx. There exist a number of common and dedicated transport channels as described in 3GPP TS 25.211. A physical channel is defined by a specific carrier frequency, scrambling code, channelization code, start and stop time (duration) and, on the uplink, relative phase (0 or $\pi/2$).

3.4.3.2.1 WCDMA Function List

The following lists the functions performed by modules of the Baseband Block when configured to support WCDMA:

- Channel encoding/decoding
- Interleaving
- Rate matching
- Multiplexing/demultiplexing

Copyright 2006, OBSAI, All Rights Reserved.
Confidential & Proprietary Information

- Spreading
- Power weighting & summing of physical channels
- RAKE reception
- MUD alternative
- Interference cancellation
- Interference Rejection CancellationFrame protocol processing
- Messages to/from RP1
- Messages to/from RP2
- Messages to/from RP3
- Higher layer processing (L2 and L3)
- CRC

3.4.3.2.2 Channel Encoding/Decoding

This function performs channel coding and decoding in accordance with 3GPP TS 25.212. Convolutional and Turbo encoding is applied to downlink data. Code rates 1/2 and 1/3 are used in convolutional encoding while code rate 1/3 is always applied in Turbo encoding. The coding scheme is selected according to transport channel type.

Decoding of convolution and Turbo encoded data is performed in uplink direction. Viterbi decoding may be applied to convolutionally encoded data while MAP (Maximum A Posteriori), log-MAP, max log-MAP or relevant algorithm may be used in Turbo decoding.

3.4.3.2.3 Interleaving

This function performs interleaving and deinterleaving accordance with 3GPP TS 25.212 for both in downlink and uplink directions. 1st and 2nd interleavers are block interleavers with inter-column permutations in accordance with 3GPP TS 25.212. 1st interleaver is applied to transport channel data and 2nd interleaver processes physical channel data.

3.4.3.2.4 Rate Matching

This function performs rate matching in accordance with 3GPP TS 25.212. Rate matching means that data bits are repeated or punctured based rate-matching attributes that are assigned by higher protocol layers. In the uplink direction, rate matching is used to match the total data rate of transport channels to that available in physical channels. In the downlink direction, data transmission is interrupted if the number of bits is lower than the maximum supported by physical channels.

3.4.3.2.5 Multiplexing/Demultiplexing

This function performs multiplexing and demultiplexing in accordance with 3GPP TS 25.212. In the downlink direction, transport channels are mapped to physical channels by concatenating radio frames (10 ms duration) of transport channels and then splitting the data to available

Copyright 2006, OBSAI, All Rights Reserved.
Confidential & Proprietary Information

physical channels. The reverse operation, i.e. demultiplexing, is done in uplink direction.

3.4.3.2.6 Spreading

This function performs spreading in accordance with 3GPP TS 25.213. In the downlink direction, physical channel data bits are first serial-to-parallel converted to I and Q branches after which channelization operation is applied to every I and Q bit. Channelization transfers a bit to a number of chips increasing the bandwidth of the signal. Used spreading factor (SF) determines how many chips will be created. The same channelization code is applied to I and Q bits and the result is considered as a complex stream of samples which is then multiplied by a complex scrambling code. In the uplink direction, different channelization codes are applied to I and Q bit sequences.

3.4.3.2.7 Power Weighting & Summing Of Physical Channels

This function performs power weighting and physical channel summing functions. After spreading, physical channels are multiplied by a weight that defines the transmission power of the channel. A complex weight coefficient may be used to cover transmission antenna diversity and smart antenna cases. A closed loop power control algorithm influences the weight used in downlink. After spreading and weighting, channels that are targeted to the same antenna and carrier frequency are summed together in order to obtain data compression.

3.4.3.2.8 RAKE Reception

This function performs RAKE reception. In a RAKE receiver, decorrelators or fingers are allocated to multipath components of one or several receiver antennas. Channel impulse response measurements are used to detect these multipaths components. For each decorrelator output, a channel estimate is computed from known pilot symbols after which output symbols of the decorrelators are combined. In maximal ratio combining, output symbols are multiplied by the respective complex conjugates of channel estimates after which the results are added together.

3.4.3.2.9 Multi-user Detection Alternative (option)

The WCDMA BB modules may perform a multi-user detection function. Multi-user Detection (MUD) RAKE simultaneously demodulates several uplink transmissions from user equipments in the presence of multi-user interference. Instead of considering the multi-user interference as white Gaussian noise, MUD RAKE receiver attempts to exploit the structure of multiaccess interference. Several MUD algorithms have been presented since the earliest reference (see Verdu).

Copyright 2006, OBSAI, All Rights Reserved.
Confidential & Proprietary Information

3.4.3.2.10 Interference Cancellation RAKE Reception (option)

The WCDMA BB modules may perform an interference cancellation function An Interference Cancellation (IC) RAKE receiver is an example of MUD algorithm. In IC RAKE, interference of other known WCDMA code channels is subtracted away from a received signal before RAKE reception. In practice, this will result in a receiver structure where there exist several RAKE receivers for each channel and signal is regenerated between these receiver stages. Both successive and parallel interference cancellation algorithms are applied.

3.4.3.2.11 Interference Rejection Cancellation RAKE Reception (option)

The WCDMA BB modules may perform an interference rejection function. In Interference Rejection Cancellation (IRC) RAKE receiver, spatial processing over several receiver antenna elements is applied in order to reject interference from few isolated interferers. By increasing the number of receiver antennas, performance of IRC RAKE is improved.

3.4.3.2.12 Frame Protocol Processing

This function performs frame protocol processing in accordance with 3GPP 25.212 specifications. Frame Protocol (FP) packets to/from transport are carried from/to baseband unit using UDP/IP. Processing includes timing, CRC calculations, bit framing and other specified tasks.

3.4.3.2.13 Messages To/From RP1

The WCDMA Baseband Block shall interface to the Control and Clock Block through Reference Point 1 (RP1) for the exchange of control, signaling, OAM&P and clock data in accordance with the requirements in the OBSAI Reference Point 1 Specification.

3.4.3.2.14 Messages To/From RP2

The WCDMA Baseband Block shall interface to the Transport Block through RP2 for the exchange of user data. User data is carried from/to the Transport Block by IP/UDP.

Network interface Frame Protocol (FP) is terminated in baseband processing block. When ATM/AAL2 is used for carrying FP data blocks, then transport is terminating AAL2 and converting the FP packets to IP/UDP.

Dedicated Node B Application Protocol (DNBAP) may be terminated in Transport Block or it may be terminated in Control and Clock Block depending on implementation.

Copyright 2006, OBSAI, All Rights Reserved.
Confidential & Proprietary Information

3.4.3.2.15 Messages To/From RP3

WCDMA BB modules in the BB Block shall provide the capability to interface to the RF Block through RP3 for the exchange of over-the-air user and signaling data. Downlink/uplink messages with data and fast control information are sent from baseband/RF unit to RF/Transport Block.

3.4.3.2.16 Higher Layer Processing (L2 and L3)

This function terminates protocol functions above Layer 1 (L1), such as Macro Diversity Combining (MDC), Media Access Control-High Speed Downlink Shared Channel (MAC-hs), MAC-e, Radio Link Control (RLC)-MAC, and PDCP.

3.4.3.2.17 Cyclic Redundancy Check (CRC)

This function performs error detection functions by means of Cyclic Redundancy Check (CRC) in accordance with 3GPP TS 25.212.

3.4.3.3 Baseband Block - CDMA2000 (3GPP2) Systems

The RF Block shall consist of one or more plug-in modules. The OBSAI BTS shall have the capability to add a Baseband Block module without powering down the BTS.

3.4.3.3.1 CDMA2000 (3GPP2) Function List

The following lists the functions performed by modules in the Baseband Block when configured to support 3GPP2 CDMA2000:

- Scrambling
- Channel encoding/decoding
- Interleaving/de-interleaving
- Multiplexing/demultiplexing:
- Mapping of transport channels to physical channels
- Spreading
- Modulation
- Power weighting & combining of physical channels
- RAKE reception with despreading, channel estimation and maximal ratio combining
- Baseband combining/distribution
- Multi-user detection (MUD)
- Packing/unpacking
- Frame protocol processing
- Messages to/from RP1
- Messages to/from RP2
- Messages to/from RP3
- Power control
- Smart antenna signal processing

Copyright 2006, OBSAI, All Rights Reserved.
Confidential & Proprietary Information

- Diversity signal processing

3.4.3.3.2 Scrambling

This function provides scrambling of user data by means of user-addressed long code. In Radio Configuration 3-9, the data scrambling is accomplished by operating on groups of 2M modulation symbols with modulo-2 addition of the modulation symbols and the binary value of the long code PN chip. In Radio Configuration 10, the interleaved symbols is accomplished by exclusive-ORing a scrambling sequence with the symbols out of the interleaver (packet data scrambling).

3.4.3.3.3 Channel Encoding/Decoding

This function provides an error correction capability into the frame to combat the channel transmission errors by adding redundancy in a controlled manner. Two types of the channel codes are specified in CDMA2000: convolutional code and turbo code.

Convolutional Code. A convolutional code is generated by passing the information sequence to be transmitted through a linear finite-state shift register. A code symbol can be considered as the convolution of the input data sequence with the impulse response of a generator function. In general, the shift register consists of K stages, where K is called the constraint length of the code. In CDMA2000, K=9 is used and code rate is 1/2, 1/3, or 1/4.

Turbo Code. The fundamental turbo code encoder is built using two identical recursive systematic convolutional (RSC) codes with parallel concatenation. Its decoding is based on passing the extrinsic information in iterative fashion between two maximum a posteriori (MAP) decoders for RSC codes. A code symbol is based on the outputs of two recursive convolutional codes (constituent codes) of the Turbo code.

3.4.3.3.4 Interleaving

This function is the process of permuting a sequence of symbols, and allows an effective method for dealing with burst error channel for the coded data in such a way that the channel with burst error is transformed into a channel having independent errors. In CDMA2000, Spreading Rate 1 uses bit-reversal order/forward-backward bit-reversal order block interleavers and the interleaver with symbol separation, subblock interleaving and symbol grouping (Radio Configuration 10) and Spreading Rate 3 demultiplexes its input symbols into three blocks with N/3 symbols each before interleaving.

3.4.3.3.5 Multiplexing/Demultiplexing

This function combines one or more data blocks into a multiplex protocol data unit (MuxPDU) and combines one or more MuxPDUs into

Copyright 2006, OBSAI, All Rights Reserved.
Confidential & Proprietary Information

a Physical layer SDU for transmission by the Physical layer. This function separates the information contained in physical layer SDU and directs the information to the correct entity (e.g., Upper Layer Signaling, Data Service instances, or Voice Service)

3.4.3.3.6 Spreading

This function modulates each bit of the data with an N-chip spreading code uniquely assigned to that user data channel. The spreading signal is comprised of symbols that are defined by a spreading sequence that is known to both the transmitter and receiver.

Orthogonal Spreading. The function provides orthogonality between user channels with Walsh code spreading sequences. .

Quadrature Spreading. The function modulates the I and Q components of QPSK carrier modulation with orthogonal spreading codes to uniquely identify the signals transmitted on the same carrier frequency by different sectors. The spreading sequence is a quadrature sequence of length 2^{15} for Spreading Rate 1 and each carrier of Spreading Rate 3. This sequence is called the pilot PN sequence.

3.4.3.3.7 Modulation

This function is used to transmit discrete units of information called symbols, and the information may be contained in the amplitude (e.g., on-off keying), the phase (e.g., phase-shift keying), or the amplitude and phase (e.g., quadrature-amplitude modulation) of the signal. In CDMA2000, BPSK, QPSK, OQPSK, 8-PSK and 16-QAM are used

3.4.3.3.8 Power Weighting And Combining of Physical Channels

This function divides composite RF power and assigns it to the pilot, sync, paging, and traffic channels. Walsh functions are used for channelization. Each Walsh function is assigned to each channel and combined signal is transmitted.

3.4.3.3.9 RAKE Reception With Despreading, Channel Estimation And Maximal Ratio Combining

This function allows the reception of the spread spectrum signal over a frequency-selective channel. The received signal is passed through a delay line receiver. The signal at each tap is despread with the replica of the time-delayed spreading sequence. Fading coefficient for each channel is estimated through channel estimation process. Each despread signal is then multiplied by corresponding fading coefficient and combined for demodulation. This is called the maximal ratio combining.

Copyright 2006, OBSAI, All Rights Reserved.
Confidential & Proprietary Information

3.4.3.3.10 Baseband Combining/Distribution

This function allows the BB combiner to combine/distribute the same carrier/sector/path signals from/to different channel cards with channel pooling.

3.4.3.3.11 Multi-user Detection (MUD) (option)

The CDMA2000 BB modules in the BB Block may provide the multi-user detection function. This function improves the performance of spread-spectrum and antenna array systems by exploiting the structure of the multiple access interference (MAI) when demodulating the signals of a user.

3.4.3.3.12 Packing/Unpacking

This function is one way of implementing multi-user detection. It can be classified as a serial or a parallel cancellation with respect to the number of signals involved in each cancellation stage. In addition, it can be classified as a partial or a full cancellation with respect to the extent of the cancellation.

3.4.3.3.13 Frame Protocol Processing

This function defines the processing of the frame based on the protocol that is used to form the frame. Frame Protocol (FP) packets to/from transport are carried from/to baseband unit using UDP/IP. Processing is done according to the air interface standard. Processing includes timing, CRC calculations, bit framing and other specified tasks.

3.4.3.3.14 Messages To/From RP1

The cdma2000 Baseband Block shall interface to the Control and Clock Block through Reference Point 1 (RP1) for the exchange of control, signaling, OAM&P and clock data in accordance with the requirements in the RP1 Specification document.

3.4.3.3.15 Messages To/From RP2

The cdma2000 Baseband Block shall interface to the Transport Block through RP2 for the exchange of user data. User data is carried from/to the Transport Block by IP/UDP.

3.4.3.3.16 Messages To/From RP3

The cdma2000 Baseband block shall provide the capability to interface to the RF Block through RP3 for the exchange of over-the-air user and signaling data. Downlink/uplink messages with data and fast control information are sent from baseband/RF unit to RF/Transport Block. The OBSAI RP2 Specification will define the protocol used on RP2 for the exchange of user data.

Copyright 2006, OBSAI, All Rights Reserved.
Confidential & Proprietary Information

3.4.3.3.17 Power Control

This function forces all users to transmit the minimum amount of power needed to achieve acceptable signal quality at BTS.

3.4.3.3.18 Smart Antenna Signal Processing (option)

This function provides the spatial signal processing that employs an array of antennas. When an array of antennas is able to change its antenna pattern dynamically to adjust to noise, interference, and multipath, it is called adaptive antenna. When the receiver selects the beam among a number of fixed beams at an antenna site, it is called switched beam systems. Smart antenna systems can include both adaptive antenna and switched beam systems.

3.4.3.3.19 Diversity Signal Processing

This function is used to reduce the effects of fading and improve the reliability of the communication without increasing either the transmitter's power or the channel bandwidth by combing the multipath signals. The OBSAI BTS shall support transmit diversity methods which include, but are not limited to, the following:

- Orthogonal Transmit Diversity per 3GPP2 CDMA2000
- Space Time Spreading per 3GPP2 CDMA2000
- Phase Sweep TX Diversity (PSTD)
- Time Delay TX Diversity (TDTD)

The OBSAI BTS shall support receive diversity methods which include, but are not limited to, the following:

- Maximum ratio combining
- MMSE

3.4.3.4 Baseband Block - WiMAX (IEEE802.16) Systems

For IEEE802.16/WiMAX systems, the Baseband Block shall provide all necessary baseband functionality in accordance with the requirements of IEEE802.16-2004 and IEEE802.16e standards.

WirelessMAN-OFDM and WirelessMAN-OFDMA are both supported in the OBSAI specifications.

- MAC
- Randomization/De-randomization
- FEC (Channel encoding/decoding)
- Interleaving/deinterleaving
- Modulation/de-modulation
- CINR (Carrier-to-Interference Noise Ratio) [or at RF, FFS]
- Baseband beam forming algorithms (Optional)
- MIMO (Optional)

Copyright 2006, OBSAI, All Rights Reserved.
Confidential & Proprietary Information

- Frame construction/de-construction
- Pre-IFFT Peak Power Reduction (FFS)
- IFFT/FFT
- Cyclic Prefix addition/removal
- TDD switch control
- Time and frequency synchronization
- Equalization
- Messages to/from RP1
- Messages to/from RP2
- Messages to/from RP3
- Power control

3.4.3.4.1 MAC

The standard describes a medium access control (MAC) that controls access of the basestation (BS) and subscriber stations (SS) to the air through a rich set of features. It provides a connection-oriented service to upper layers of the protocol stack. Connections have QoS characteristics that are granted and maintained by the MAC. The on-air timing is based on consecutive frames that are divided into slots. The size of frames and the size of individual slots within the frames can be varied on a frame-by-frame basis, under the control of a scheduler in the BS.

The QoS parameters can be varied by the SS making requests to the BS to change them while a connection is maintained. QoS service in the 802.16 MAC service takes one of four forms: (a) constant bit rate grant, (b) real time polling, (c) nonreal-time polling, and (d) best effort. Through the use of flexible PHY modulation and coding options, flexible frame and slot allocations, flexible QoS mechanisms, packing, fragmentation and ARQ, the 802.16 standard can be used to deliver broadband voice and data into cells that may have a wide range of properties. This includes a wide range of population densities, a wide range of cell radii and a wide range of propagation environments. Convergence sublayers at the top of the MAC enable Ethernet, ATM, TDM voice and IP (Internet Protocol) services to be offered over 802.16.

3.4.3.4.2 Randomization/De-randomization

Data randomization shall be performed on each burst of data on the downlink and uplink in accordance with IEEE802.16 standard. The randomization is performed on each allocation (downlink or uplink), which means that for each allocation of a data block (subchannels on the frequency domain and OFDM symbols on the time domain) the randomizer shall be used independently.

Copyright 2006, OBSAI, All Rights Reserved.
Confidential & Proprietary Information

3.4.3.4.3 FEC (Channel encoding/decoding)

Convolutional or turbo-encoding of data is performed in the downlink. Decoding of convolution and Turbo-encoded data is performed in uplink direction. Viterbi decoding may be applied to convolutionally encoded data while MAP (Maximum A Posteriori), log-MAP, max log-MAP or relevant algorithm may be used in Turbo decoding. Reel-Solomon and convolutional coding are mandatory forward-error correction techniques that must be used when implementing the WirelessMAN OFDM PHY. Table 3.4-1 lists the corresponding rate set along with the modulation types.

Table 3.4-1 Mandatory Channel Coding

Modulation	Code Rate
QPSK	1/2
QPSK	3/4
16 QAM	1/2
16 QAM	3/4
64 QAM	3/4
64 QAM	2/3

Note: The code rates mentioned in this table are the overall code rates achieved by Reed-Solomon and convolutional coding.

Table 3.4-2 shows the data rates achieved for various bandwidths and combination of modulation types and coding rates. A guard time value of 1/32 is used. The rates here consider the effect of PHY overhead but MAC overhead and preamble overhead are not included.

Copyright 2006, OBSAI, All Rights Reserved.
Confidential & Proprietary Information

Table 3.4-2 Data Rates Achieved at Various Bandwidths

BW	Code Rate					
	QPSK 1/2	QPSK 3/4	16QAM 1/2	16QAM 3/4	64QAM 2/3	64QAM 3/4
1.75	1.04	2.18	2.91	4.36	5.94	6.55
3.5	2.08	4.37	5.82	8.73	11.88	13.09
7.0	4.15	8.73	11.64	17.45	23.75	26.18
10	8.31	12.47	16.63	24.94	33.25	37.40
20	16.62	24.92	33.25	49.87	66.49	74.81

3.4.3.4.4 Interleaving/deinterleaving

The IEEE802.16/WiMAX BB module shall perform interleaving of encoded data bits in accordance with IEEE802.16 specification. All encoded data bits shall be interleaved by a block interleaver with a block size corresponding to the number of coded bits per the allocated subchannels per OFDM symbol. The interleaver is defined by a two step permutation. The first ensures that adjacent coded bits are mapped onto nonadjacent subcarriers. The second permutation insures that adjacent coded bits are mapped alternately onto less or more significant bits of the constellation, thus avoiding long runs of lowly reliable bits.

3.4.3.4.5 Modulation/de-modulation

Conversion of wanted data to I & Q baseband signals capable of being transmitted by OFDM or OFDMA carriers by the RF module (and vice-versa for the receive side).

3.4.3.4.6 CINR (Carrier-to-Interference Noise Ratio) [or at RF, FFS]

The baseband module can carry out an assessment of the signal quality of the received signal (or signals) by assessing the ratio of the composite carrier to the received interference and noise.

3.4.3.4.7 Baseband beam forming algorithms (Optional)

When an adaptive antenna system is employed, which utilises baseband beamforming techniques, the signal processing required to form and update the beams is performed in the baseband module. Similarly if fixed or switched beamforming is employed, this is undertaken in the baseband module.

Copyright 2006, OBSAI, All Rights Reserved.
Confidential & Proprietary Information

3.4.3.4.8 MIMO (Optional)

The IEEE802.16/WiMAX BB module may provide spatial signal processing that employs an array of antennas such as MIMO, space-division multi-access (SDMA), Almouti, etc. The multiple-antenna coding algorithm shall be performed in accordance with IEEE802.16 specification.

3.4.3.4.9 Frame construction/de-construction

The IEEE802.16/WiMAX BB modules shall perform on-air framing in accordance with IEEE802.16 standard. WirelessMAN OFDM PHY frame durations are 2 (for OFDMA), 2.5, 4, 5, 8, 10, 12.5 and 20 msec. In the case of an FDD system, uplink and downlink subframes shall be time-aligned on separate uplink and downlink channels. In the case of a TDD system, each frame shall be divided up into a downlink subframe and an uplink subframe. In both TDD and FDD modes, the length of the frame can vary per frame. In TDD mode, the division point between uplink and downlink can also vary per frame, allowing asymmetric allocation of on air time between uplink and downlink if required. The downlink frame format includes a preamble, a down-link slot location directory, an uplink slot location directory.

3.4.3.4.10 Pre-IFFT Peak Power Reduction (FFS)

In OFDM and OFDMA systems, it is possible to apply peak power reduction techniques at two points in the overall system: prior to the IFFT (which falls within the baseband module) and in the form of more conventional crest factor reduction (which falls within the RF module).

3.4.3.4.11 IFFT/FFT

The IFFT and FFT algorithms are used to convert to/from time and frequency domains when forming or decoding the multiple carriers in an OFDM or OFDMA system.

3.4.3.4.12 Cyclic Prefix addition/removal

A cyclic prefix is employed to provide a synchronisation capability for the WiMAX system.

3.4.3.4.13 TDD switch control

The baseband module provides a control signal to the RF module to indicate when the system should be in transmit mode and when it should be in receive mode.

3.4.3.4.14 Time and frequency synchronization

The baseband module must provide frequency synchronisation with the received signal and extract the frame timing of that signal.

Copyright 2006, OBSAI, All Rights Reserved.
Confidential & Proprietary Information

3.4.3.4.15 Equalization

Channel equalization of the received signal is provided by the baseband module.

3.4.3.4.16 Messages to/from RP1

The IEEE802.16/WiMAX Baseband Block shall interface to the Control and Clock Block through Reference Point 1 (RP1) for the exchange of control, signaling, OAM&P and clock data in accordance with the requirements in the OBSAI Reference Point 1 Specification.

3.4.3.4.17 Messages to/from RP2

The IEEE802.16/WiMAX Baseband Block shall interface to the Transport Block through RP2 for the exchange of user data. User data is carried from/to the Transport Block by IP/UDP. WiMAX R6 interface is aligned with OBSAI RP2 interface. WiMAX user data transfer over RP2 using IP/GRE protocol should be considered because this protocol is used in R6.

The interface Frame Protocol (FP) is terminated in baseband processing block. When ATM/AAL2 is used for carrying FP data blocks, then transport is terminating AAL2 and converting the FP packets to IP/UDP.

3.4.3.4.18 Messages to/from RP3

IEEE802.16/WiMAX BB modules in the BB Block shall provide the capability to interface to the RF Block through RP3 for the exchange of over-the-air user and signaling data. Downlink/uplink messages with data and fast control information are sent from baseband/RF unit to RF/baseband Block.

3.4.3.4.19 Power control

The baseband module can control the power of the OFDM or OFDMA modulated signals, with the capability to assign each an individual power level.

3.4.3.4.20 Interference Rejection Cancellation (option)

The IEEE802.16/WiMAX BB modules may perform an interference rejection function. In Interference Rejection Cancellation (IRC) receiver, spatial processing over several receiver antenna elements is applied in order to reject interference from few isolated interferers.

3.4.3.5 Baseband Block OAM&P Functions

The Baseband Block shall conform to the BTS system level OAM&P architecture described in Section 3.4. Additional details specific to this block are available in the “Baseband Module Specifications”.

Copyright 2006, OBSAI, All Rights Reserved.
Confidential & Proprietary Information

The functional split between BB and RF Modules need to be defined in more detail. In RP3 work, FFT/iFFT and CP addition/removal have been assumed to be located at the BB Module.

3.4.4 RF Block

The RF Block shall consist of one or more modules that perform the RF functions described below for the air interfaces that include, but are not limited to, those listed below. The RF Block shall provide the capability for concurrent operation of two or more of the air interfaces summarized in Table 3.4-3 below. In order to ensure global implementation, the IEEE 802.16 standard has been defined with a variable channel bandwidth. The channel bandwidth can be an integer multiple of 1.25 MHz, 1.5 MHz, and 1.75 MHz with a maximum of 20 MHz. This large choice of possible bandwidths is being narrowed down to a few possibilities by the WiMax Forum, whose primary task is to ensure interoperability between implementations of the 802.16d standard by different vendors.

The OBSAI BTS shall have the capability to add or remove a RM module in the RF Bock without powering down the BTS.

Redundancy requirements of the RF Block are defined in Section 3.9.

Copyright 2006, OBSAI, All Rights Reserved.
Confidential & Proprietary Information

Table 3.4-3 Summary of Radio Profile Characteristics for 3G Standards

Standard	Frequency Range (MHz)		Bandwidth (MHz)	Modulation
GSM	T-GSM 380	380.2 - 389.8 / 390.2 - 399.8	0.200	0.3 GMSK, 1 bit/symbol EGPRS only: 3ð/8 rotating 8PSK 3 bits/symbol
	T-GSM 410:	410.2 - 419.8 / 420.2 - 429.8		
	GSM 450	450.4 - 457.6 / 460.4 - 467.6		
	GSM 480	478.8 - 486 / 488.8 - 496		
	GSM 750	747 - 762 / 777 - 792		
	GSM 850	:824 - 849 / 869 - 894		
	P-GSM 900:	890 - 915 / 935 - 960		
	E-GSM 900	880 - 915 / 925 - 960		
	R-GSM 900	876 - 915 / 921 - 960		
	T-GSM 900	870.4 - 876 / 915.4 - 921		
	DCS 1800	1710 - 1785 / 1805 - 1880		
	PCS 1900	1850 - 1910 / 1930 - 1990		
3GPP W-CDMA	Band I	1920 - 1980 / 2110 - 2170	5	HPSK with RRC filter (a = 0.22), 1 bit/symbol (UL) QPSK with RRC filter (a = 0.22), 2 bits/symbol (DL)
	Band II	1850 - 1910 / 1930 - 1990		
	Band III	1710 - 1785 / 1805 - 1880		
	Band IV	1710 - 1755 / 2110 to 2155		
	Band V	824 – 849 / 869 to 894		
	Band VI	830 - 840 / 875 - 885		
3GPP HSDPA / HSUP	Band VII:	2500 - 2570 / 2620 - 2690	5	HPSK with RRC filter (a = 0.22), 1 bit/symbol (UL) QPSK with RRC filter (a = 0.22), 2 bits/symbol (DL)
	Band VIII	880 - 915 / 925 - 960		
	Band II	1850 – 1910 / 1930 – 1990		
	Band III	1710 – 1785 / 1805 – 1880		
3GPP2 CDMA	NMT 450	411 to 483 / 421-493	1.25	Chebychev low pass (FIR) QPSK/HPSK, 2 bits/symbol (UL) QPSK, 2 bits/symbol (DL)
	Band 0	824-849 / 869 – 894		
	Band 1	1850 – 1910 / 1930 - 1990		
	Band 2	872 – 915 / 917 - 960		
	Band 3	887 – 924 / 832 - 870		
	Band 4	1750 – 1780 / 1840 - 1870		
	Band 5	411 – 420 / 421 – 430 450 – 460 / 460 – 470 479 - 483.5 / 489 – 493.5		
	Band 6	1920 - 1980 / 2110 to 2170		
WiMAX	Fixed access: 3400-3600 (except US) Unlicensed bands Mobile access: 2300-2400 (Korea) 2500-2690 (US, Mexico, Brazil) 3600 (US - Future)		Fixed access: 1.25 to 28 MHz Mobile access: 1.25, 5, 10, 20 MHz	Fixed access: OFDM with BPSK, QPSK, 16QAM, 64QAM Mobile access: OFDMA with BPSK, QPSK, 16QAM, 64QAM

3.4.4.1 RF Block Function List

The following lists the functions performed by the RF Block:

- D/A & A/D conversion
- Up/down conversion

Copyright 2006, OBSAI, All Rights Reserved.
Confidential & Proprietary Information

- Carrier selection
- Linear power amplification
- Antenna interface
- Transmit / receive RF filtering
- RF combining
- Transmit / receive RF filtering
- Diversity transmit
- Diversity receive (duplexing, etc.)
- Low noise amplification
- Peak power reduction
- OAM&P Functions
- Implementing detailed control of air interface timings
- Calibration of parallel transmit/receive channels (Optional. FFS; part of the calibration could be done at BB)

3.4.4.1.1 D/A & A/D Conversion

For the forward direction, the RF Block performs the function that converts the digital signals received from the Baseband Block into the analog format for transmission on the RF carrier. For the reverse direction, the RF Block performs the function that converts the received analog signals into the digital format for communications to the Baseband Block.

3.4.4.1.2 Up/Down Conversion

For the forward direction, the RF Block performs the function that translates and upconverts the digital signals received from the Baseband Block to the assigned carrier frequency. For the reverse direction, the RF Block downconverts and translates the received RF signals on the assigned carrier frequency into the digital format for communications to the Baseband Block.

3.4.4.1.3 Carrier Selection

This function allows the operator to select or change the carrier frequency for any module in the RF Block. For FDD operation, the carrier selection sets both transmit and receive frequencies.

3.4.4.1.4 Linearized Power Amplification

This function allows a linearized power amplifier (LPA) to amplify the transmitted signal preserving the original wave shape of the input signal at the output.

3.4.4.1.5 Antenna Interface

This function allows the RF module to send or receive RF signals through antennas. The RF modules in the RF Block shall provide a 50-ohm antenna interface.

Copyright 2006, OBSAI, All Rights Reserved.
Confidential & Proprietary Information

3.4.4.1.6 RF Combining

The OBSAI BTS shall combine the outputs of RF amplifiers to drive one common antenna.

3.4.4.1.7 Transmit / Receive RF Filtering

This function rejects the local feed-through of out-of-band signals in the transmit path and the unwanted mixing image in the transmitted signal.

3.4.4.1.8 Diversity Transmit

The OBSAI BTS shall provide the capability for transmit diversity for each carrier and each sector. This function allows the base station system to transmit TX signals through polarization antenna or multiple antennas.

3.4.4.1.9 Diversity Receive

The OBSAI BTS shall provide the capability to receive RX signals through polarization antenna or multiple antennas.

3.4.4.1.10 Low Noise Amplification

This function amplifies input signal at the front-end using an amplifier with very low noise figure.

3.4.4.1.11 Peak Power Reduction

The OBSAI BTS shall provide crest factor reduction for CDMA2000, WCDMA, and OFDMA (Orthogonal Frequency Division Multiple Access) signals. This function reduces the peak power of original baseband signal for increasing the efficiency and reducing the back-off margin of power amplifier.

3.4.4.1.12 RF Block OAM&P Function

The RF Block shall conform to the BTS system level OAM&P architecture described in Section 3.5. Additional details specific to this block will be available in the OBSAI RF Block Specifications.

3.4.4.1.13 Control of Air Interface Timings

For the forward direction, the RF block aligns samples, which are received from the baseband block, with the air interface frame clock.

3.4.4.1.14 Calibration of Parallel Transmit/Receive Channels

The OBSAI BTS may optionally support smart antenna technologies. RF block supports calibration of parallel transmit and receive channels removing (minimizing) delay, phase, and amplitude differences between the channels.

Copyright 2006, OBSAI, All Rights Reserved.
Confidential & Proprietary Information

3.4.5 General Purpose Block

The OBSAI BTS may have the capability to add a General Purpose (GP) module for functions not explicitly covered by the functions of the Transport Block, Control and Clock Block, Baseband Block, or RF Block. Examples of functions that might belong to a General Purpose Module include various types of network interfaces, GPS timing receiver, external alarm collection unit, etc.

The possible set of interfaces that a non-standard module may require is unknown; therefore, all interfaces for such a module cannot be standardized. However, a General Purpose Module shall meet the requirements for RP1 interface, mechanical dimensions, power and signal connectors. A General Purpose Module may interface to other modules via front panel connection, or on a backplane through use of Proprietary Reserved signal pins.

3.4.5.1 Example: Network Interface Module

An example of how a General Purpose Module might be used to implement various types of network interfaces is shown in Figure 3.4-1 below. In this example, the module in the Transport Block consists of a Router&Switch sub-module. One or more Network Interface sub-modules are implemented as modules in the General Purpose Block.

Copyright 2006, OBSAI, All Rights Reserved.
Confidential & Proprietary Information

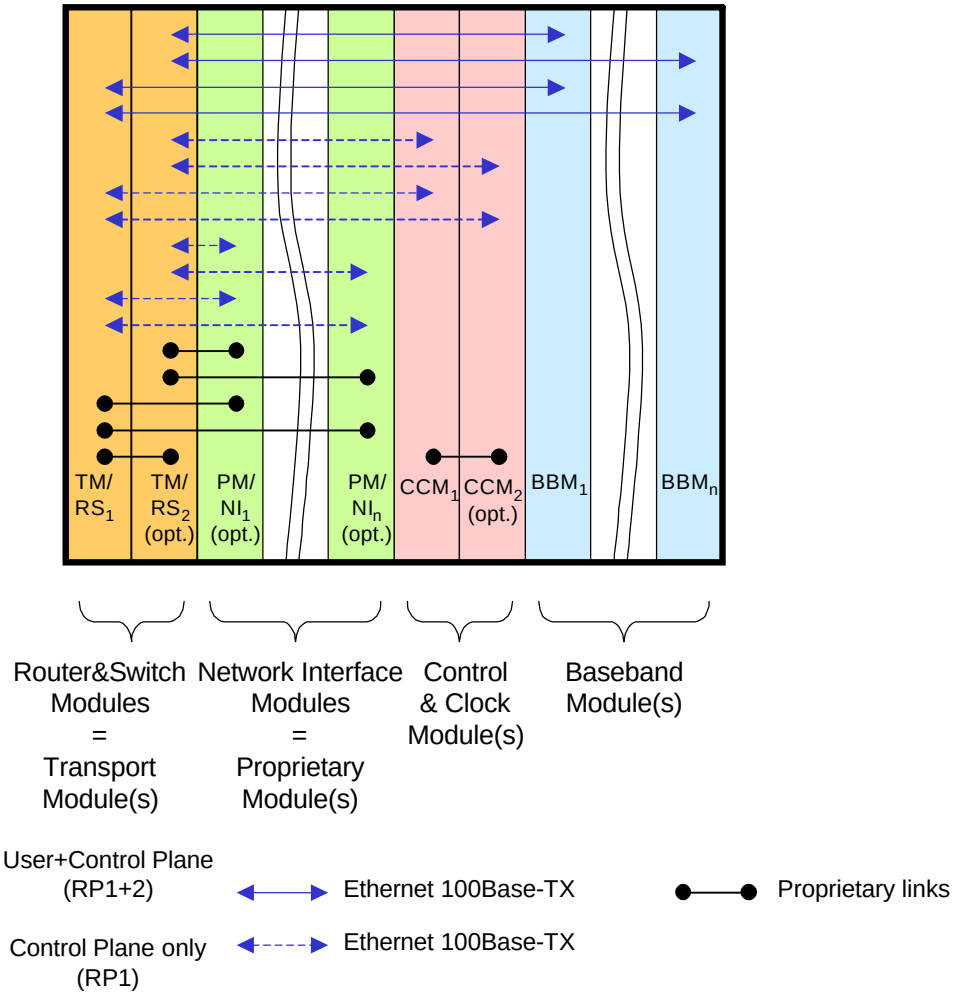

Figure 3.4-1 Example of Implementation of Module in General purpose Block

3.4.5.2 Example: External I/O Interface Module

A General Purpose Module may also be used to provide the capability for an operator to interface with external equipment or instrumentation for controlling site equipment or for collection of alarms.

3.4.5.3 Example: Extension Module

While one function of the Transport Block is to distribute the RP1 and RP2 Ethernet network to all modules in first shelf, and one function of the Control and Clock Block is to distribute timing references to all modules in that same shelf, some BTS designs require the Ethernet network as well as timing references in additional shelves as well. For this reason, the Extension Module concept was created.

The Extension Module is responsible for taking an Ethernet link from the TM, and timing reference from the CM, and providing Ethernet

Copyright 2006, OBSAI, All Rights Reserved.
Confidential & Proprietary Information

connectivity as well as the timing reference to all other cards in the shelf in which the EM resides.

The number of Ethernet and timing reference ports that the Extension Module must support varies greatly from one BTS design to another. For this reason, the Extension Module will not be standardized as a part of the OBSAI specifications. It is intended that the Extension Module be designed in such a way as to interoperate with the TM and CM as described in their respective specifications.

The TM specifications include a requirement to provide enough Ethernet ports to support all of the modules that will reside in the first shelf, plus one additional port to support to an Extension Module. Likewise, the CM specifications include a requirement to provide enough Synchronization Bus ports to support all of the modules that will reside in the first shelf, plus one additional port to support an Extension Module.

The Extension module should provide enough Ethernet ports and Synchronization Bus ports to support all of the modules that are located in the shelf in which it resides plus one additional port to support another EM in another shelf. Delays in switching/routing and clock distribution should be minimized.

3.4.6 Power System Unit (PSU) Block

The system Power Module is responsible for delivering power to all operating modules of the BTS through the respective backplane of each shelf. Modules and backplanes shall provide DC isolation between the power domain and the BTS logic-common domain. DC output of the Power Module shall be isolated from chassis and earth ground, with provision for connecting the DC power return to earth ground. All conduits of the power domain shall observe the mutual creepage clearance distances between the conduits and logic-common and associated signals.

3.4.6.1 Supply Voltage

The BTS shall operate with either –48 VDC or +24 VDC nominal power.

3.5 OAM&P Principles and Architecture

The high level concepts of OAM&P functionality of the OBSAI BTS are described in this section with the scope limited to the discussion of:

- System level OAM&P implementation concepts
- Minimal BTS information model

Copyright 2006, OBSAI, All Rights Reserved.
Confidential & Proprietary Information

- Protocol for internal interfaces

Refer to the OBSAI Reference Point 1 Specification, the OBSAI Reference Point 2 Specification and the OBSAI Reference Point 3 Specification for requirements related to that interface.

3.5.1 Overview of OAM&P support

OAM&P support is limited to internal functions and interfaces of the OBSAI BTS. This is shown in Figure 3.5-1. It is assumed that the ultimate responsibility of interoperating with external third party and legacy EMS/NMS lies with the BTS system integrator.

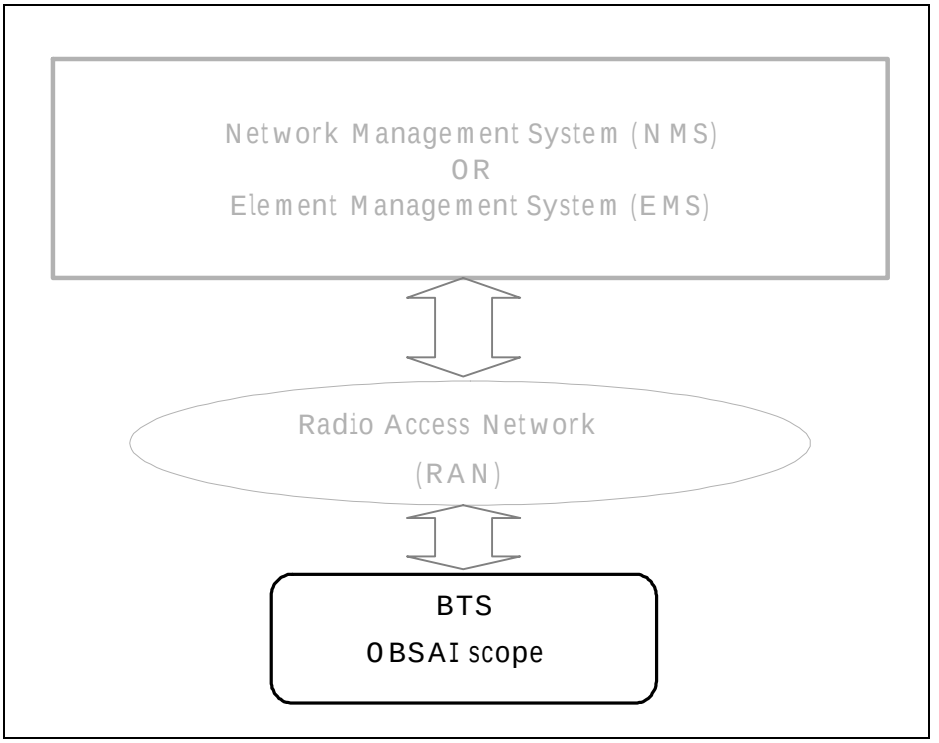

Figure 3.5-1 Network Management Hierarchy

The following basic capabilities shall be supported by the OBSAI BTS:

- Configuration management functions for enabling deployment of OBSAI BTS modules.
- Fault Management capabilities for monitoring the health of OBSAI BTS modules.
- Performance management functions for collecting performance metrics of OBSAI BTS modules.
- Software management functions related to installing, and updating software.

Section 3.5.3.1 provides an overview of the protocol stack for both internal and external interfaces.

Copyright 2006, OBSAI, All Rights Reserved.
Confidential & Proprietary Information

3.5.2 OAM&P Implementation Concept

The OBSAI OAM&P support internal to the BTS shall be XML-based. The XML-based protocol enables network management via a web interface that also allows easy plug-in to legacy EMS/NMS.

The vendor modules shall support the proposed common BTS information model specific to the module as outlined in the OBSAI Reference Point 1 Specification. Module agent software shall reside on the local hardware (for example, the BBM module agent shall reside on the BBM). The communication between the module agents (BBM, RFM, TM and GPM) and the BTS master agent on the Control and Clock Block shall be via both direct and indirect interface as described in sections 3.5.2.1.1 and 3.5.2.1.2 respectively.

An external EMS/NMS shall be able to interface directly with the BTS master agent, which shall provide a conduit for managing the information pertaining to the other modules. A direct interface from an external EMS/NMS to the module agents shall not be supported.

The module vendors shall be responsible for providing module agent software. The system integrator shall have the additional responsibility of providing the management software that resides on an external EMS/NMS.

3.5.2.1 Internal Interface

The module agents in the OAM&P architecture shall have the capability to use a direct interface with the BTS master agent. A combination of direct and indirect interfaces with the BTS master agent is also possible as described below.

3.5.2.1.1 Direct Interface

If the direct interface option is chosen, then the module agents shall communicate directly with the BTS master agent as shown in Figure 3.5-2. The direct interface shall be XML-based as specified in the OBSAI Reference Point 1 Specification.

Copyright 2006, OBSAI, All Rights Reserved.
Confidential & Proprietary Information

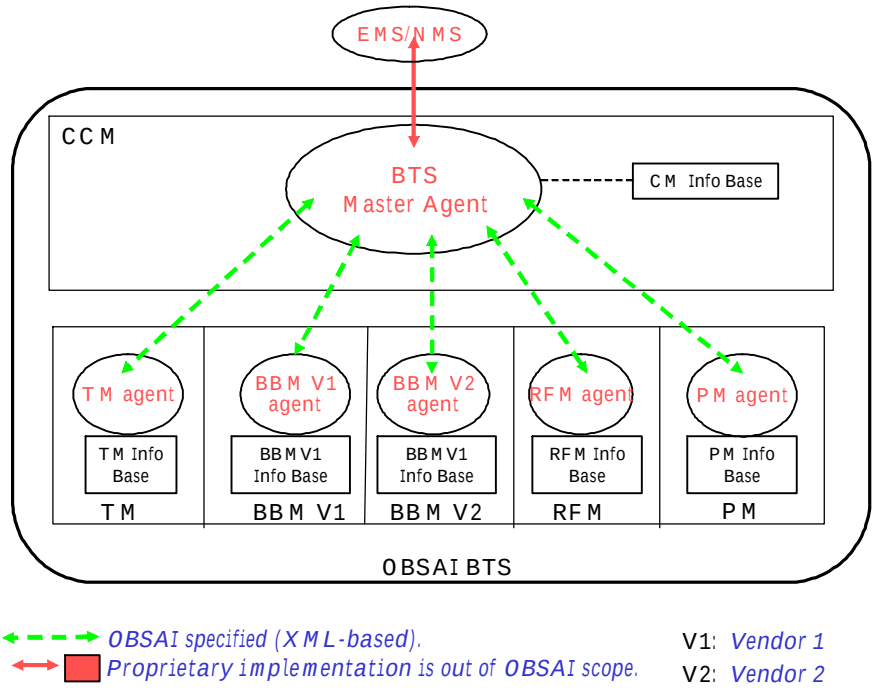

Figure 3.5-2 OAM&P BTS Internal Interface Architecture

3.5.2.1.2 Indirect Interface

In this option, each module agent shall communicate with the BTS master agent via a module proxy as shown in Figure 3.5-3. The module proxies shall be provided by the vendor of that module. The proxies shall reside on the CCM. The interface between the module agent and its proxy is not specified within OBSAI and may be XML-based or proprietary. The interface between the module proxies and the BTS master agent shall be XML-based as specified in the OBSAI Reference Point 1 Specification.

Copyright 2006, OBSAI, All Rights Reserved.
Confidential & Proprietary Information

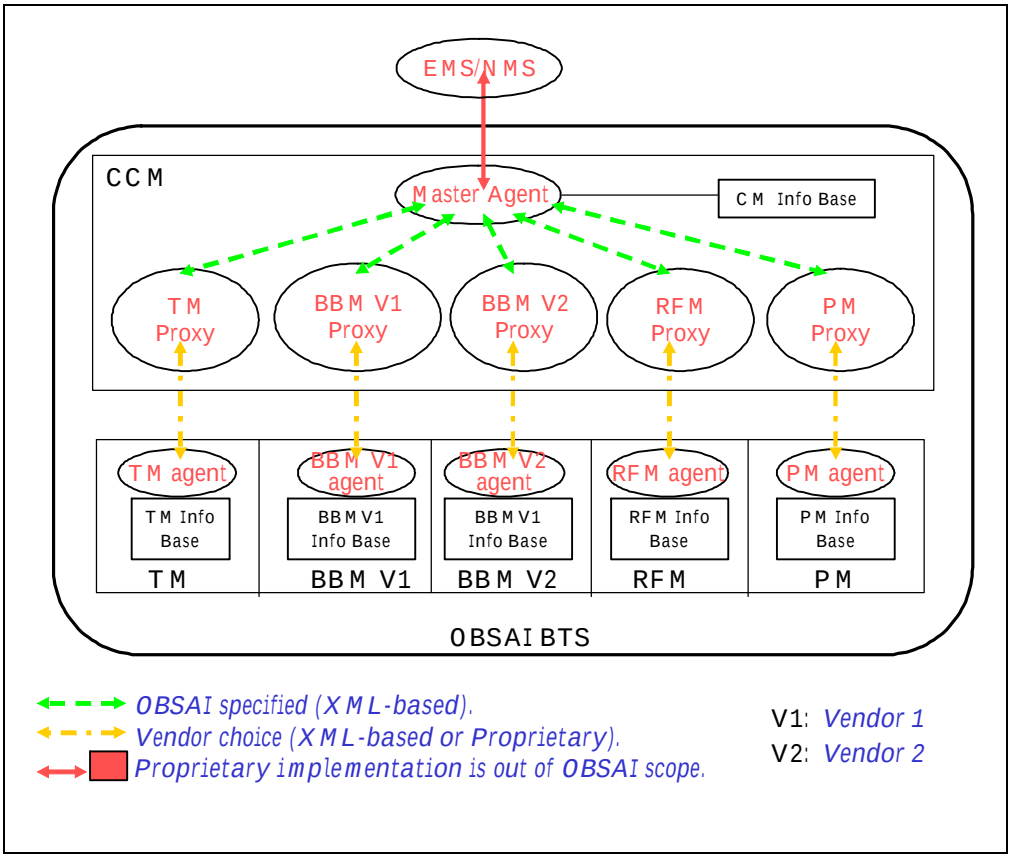

Figure 3.5-3 OAM&P BTS Internal Interface Architecture for Indirect Interface

3.5.3 OAM&P BTS Information Model

The OBSAI information model shall be logically distributed within an OBSAI BTS. This distribution is regardless of the chosen internal agent interface. The distribution of each module's information model aligns with common abstraction trends in the industry. Elements within each module's information model shall be accessed by the BTS master agent only via the module agent and/or the module proxy. Refer the OBSAI Reference Point 1 Specification for details pertaining to the OBSAI information model.

3.5.3.1 Protocol Stack

This protocol stack for the management of OBSAI BTS is shown in Figure 3.5-4.

Copyright 2006, OBSAI, All Rights Reserved.
Confidential & Proprietary Information

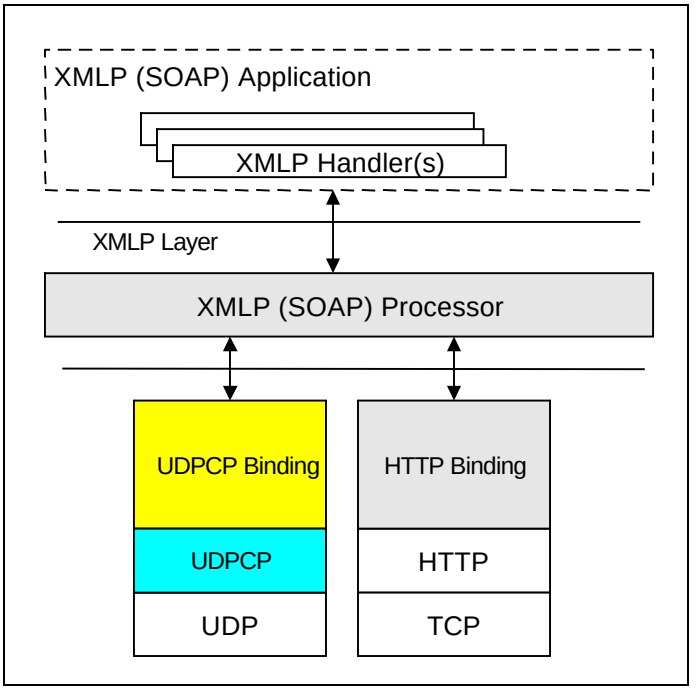

Figure 3.5-4 OBSAI Management Protocol Stack

3.6 Addressing Principles

The Addressing Principles section provides means for addressing HW and SW resources of OBSAI modules. When a module is powered up one of the first steps for the module is to create its own physical and logical addressing information to be able to initiate communication with other modules.

Ethernet MAC addresses shall be either globally or locally unique as described in section 3.6.1.

IPv6 addresses shall be created using IPv6 Stateless Address auto-configuration mechanism. For IPv4 addresses the DHCP "Dynamic Host Configuration Protocol" shall be used. These methods are described in section 3.6.2.

When a module has assigned both MAC and IP-addresses the SW resources can be addressed as described in section 3.6.3.

3.6.1 MAC Address Assignment

This section describes how 48-bit Ethernet MAC addresses are allocated. All MAC addresses shall be according to [IEEE Std 802.3]. It shall be possible to use both global and locally unique addresses.

Copyright 2006, OBSAI, All Rights Reserved.
Confidential & Proprietary Information

These MAC addresses can be used both for physical MAC and logical MAC (shared virtual) purposes as mentioned in section 3.9.2.

3.6.1.1 Globally Unique MAC Address Allocation

The global MAC addresses shall have the “u” bit set to 0. This prevents overlapping with locally unique MAC addresses.

The first 24 bits of the MAC address will be reserved for company identification as assigned from IANA and shown as “c” in Figure 3.6-1. The last 24 bits are the manufacturer selected extension identifier bits, shown as “m” in Figure 3.6-1 below.

24	24
cccccccug cccccccc cccccccc	mmmmmmmm mmmmmmmm mmmmmmmm

Figure 3.6-1 IEEE 802 based global MAC address

3.6.1.2 Locally Unique MAC Address Allocation

<u>MAC Address Based On Module HW Position</u>:

If this method is used, the MAC address shall be created as shown in Figure 3.6-2 below:

5	3	18	3	7	3	5	4
Res	xug	Res	LCID	RCID	SRID	Slot ID	IF ID

Figure 3.6-2 MAC address based on HW position

When MAC addresses are based on HW position, the “x” bit shall be set to 0. “u” is the universal/local bit and shall be set to 1, indicating local scope. “g” is the group/individual bit and shall be set to 0, indicating an individual address. The bit positions labeled “Res” are reserved bits. These reserved bits shall be set to 0. The OBSAI defined bits are described below:

- Local Cabinet ID (LCID): 3 bits. These bits are reserved for Local Cabinet identification. If Local Cabinet identification is not required, this field shall be set to 0.

Copyright 2006, OBSAI, All Rights Reserved.
Confidential & Proprietary Information

- Remote Cabinet ID (RCID): 7 bits. These bits are used for identification of Remote Cabinets. All modules inside a Local Cabinet shall set this field to 0. This allows up to 127 individual RCs to be addressable from each local cabinet using the remaining unreserved RCID values. The RCID value is a logical address. However, it can be physically associated with the RC it addresses via a centralized mapping table. This allows the RCID addressing scheme to flexibly support both existing and future RC network topologies. The address generation function resident in the local cabinet shall arbitrarily assign the RCID value when an unconfigured RC boots up. The location of the address generation function in the local cabinet is not specified by OBSAI and is implementation specific.

- Subrack ID (SRID): 3 bits. These bits shall be used to identify the module subrack. *(Note: The term* Subrack ID *is used interchangeably with* Shelf Address *in OBSAI documents)*
- Slot ID: 5 bits. These bits shall be used to identify the module slot position. *(Note: The term* Slot ID *is used interchangeably with* Module Address *in OBSAI documents)*
- IF ID: 4 bits. These bits shall be used to identify one of "n" possible processor interfaces within the module.

MAC Address Based On Other Methods:

Other methods may be used when module HW position information is not available. In these cases, it is the BTS Integrator's responsibility to ensure uniqueness of these addresses. "x" bit shall be set to 1. "u" is the universal/local bit and shall be set to 1, indicating local scope. "g" is the group/individual bit and shall be set to 0, indicating an individual address. The remaining bits are not defined by OBSAI.

3.6.2 IP Address Assignment

Following sections present means for auto-configuration of IP addresses.

3.6.3 IPv6 Address Assignment

The IPv6 address shall be created using stateless address auto-configuration as described in [RFC 3513], which is based on 48-bit MAC address.

Copyright 2006, OBSAI, All Rights Reserved.
Confidential & Proprietary Information

```
|0                   1|1                   3|3                   4|4                   6|
|0                   5|6                   1|2                   7|8                   3|
+-----------------+-----------------+-----------------+-----------------+
|cccccc1gcccccccc|cccccccc11111111|11111110rrrrrrrrrrrr|rrrrrrrrrrrrrrrrrrrrrrrr|
+-----------------+-----------------+-----------------+-----------------+
```

Figure 3.6-3 IPv6 address interface ID

3.6.4 IPv4 Address Assignment

The Dynamic Host Configuration Protocol (DHCP), specified in [RFC 2131] and [RFC 2132] shall be used to assign IPv4 addresses. The BTS integrator is responsible for ensuring the presence of a single active DHCP server.

3.6.5 Addressing Of Software Resources

Service Location Protocol (SLP) shall be used for resolving addresses of services provided by BTS modules. SLP is described in detail in [RFC 2608], [RFC 2609], [RFC 2614] and [RFC 3111]. The SLP specifications allow implementation with or without a Directory Agent (DA). Both methods shall be supported, but not simultaneously. The usage of DA shall be configurable to enable modules to decide whether to perform DA discovery or not. Optionally it shall be possible to use a fallback mechanism to change the selected method in case of a problem. The SLP uses URLs for addressing software resources. URL includes the name of the service, transport protocol used, the address of the service including port information. Attributes may also be provided. The format is as follows:

URL= Service:Name:protocol://IP-addess:port;Attributes;

Examples of Directory Agent service and Master Agent service are illustrated below:

URL= Service:DirectoryAgent:UDP://192.168.100.1:427;

URL= Service:MasterAgent:SOAP://10.10.142.2:90;

Copyright 2006, OBSAI, All Rights Reserved.
Confidential & Proprietary Information

3.6.5.1 SLP Exceptions

SLP was originally developed for use in enterprise office networks. Using the SLP in OBSAI BTS environment requires the following parameters to be redefined as follows.

3.6.5.1.1 Service Lifetime.

According to the [RFC 2608], the service lifetime can be set from 0 to approximately 18 hours (values 0 to 0xffff). In OBSAI specification the value 0 in service lifetime shall indicate infinite service registration.

3.6.5.1.2 Service Deregistration

According to the [RFC 2608], the Service Deregistration message is set to be optional. When the service lifetime is set to be infinite, Service Deregistration message is mandatory.

3.7 Synchronization

Figure 3.7-1 illustrates the synchronization hierarchy of the clock and frequency functions provided by the synchronization plane. The synchronization plane shall perform the following functions:

- Interface to one or more time and frequency sources
- Generate and distribute a common system clock and time reference signal
- Provide the capability for concurrent operation with multiple air interfaces.

The BTS shall have the capability to interface to one or more of the following input reference clock and timing sources:

- GPS based clock and time reference
- Atomic clock locked terrestrial transmission
- 10 MHz external reference such as from a rubidium clock
- 2.048 MHz external reference (typical reference in E1/T1 interface clocking)
- External core network interface

Copyright 2006, OBSAI, All Rights Reserved.
Confidential & Proprietary Information

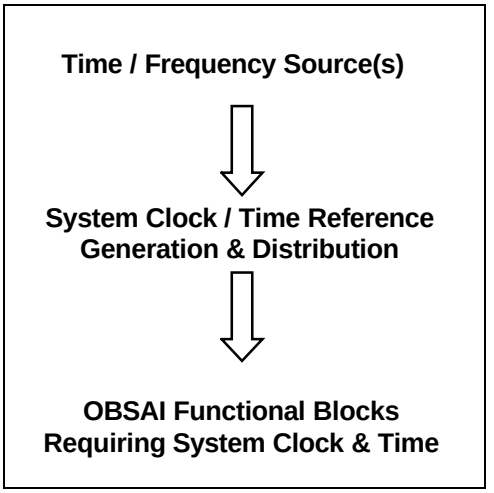

Figure 3.7-1 Synchronization Hierarchy

The BTS shall have the capability to derive time and frequency reference signaling from the input reference clock and timing source, generate internal system clock and time reference signaling required for OBSAI functional blocks, and distribute the system clock and time reference signals to OBSAI Functional Blocks. The OBSAI BTS shall use a common System Clock for synchronizing all frequencies used by Functional Blocks and system modules. The OBSAI BTS shall use one clock network to deliver clock signaling, frame timing, and time stamp for each of the air interface systems independently. The common system clock shall support concurrent operation of WCDMA, CDMA2000 and GSM/EDGE on the same BTS.

3.8 BTS Start-up and Hot Insertion/Removal Principles

This section describes the typical sequence of events that occur when a module/resource is inserted in or removed from an OBSAI BTS. The purpose of this section is to illustrate the possible occurrence of events and the use of OBSAI specified messages to manage the events. Additionally, the principles described here are not intended to include exception cases like timeouts, lost messages etc. These details are design considerations that are out of scope of this section.

The principles discussed are applicable to both a deployed BTS and a new BTS. The typical Start-up Sequence overview is shown in Figure 3.8-2.

Copyright 2006, OBSAI, All Rights Reserved.
Confidential & Proprietary Information

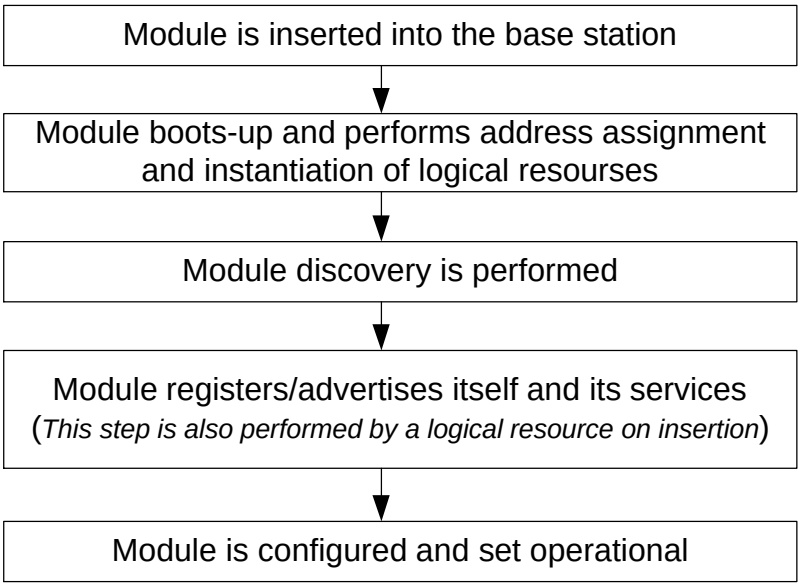

Figure 3.8-2 Start-up Sequence overview

In the case of a module insertion or removal, the entire start-up/removal sequence may be executed. In the case of a resource insertion or removal, service registration/removal may be performed (if applicable). Section 3.8.2 describes the sequence of events for a Directory Agent (DA) based implementation. Section 3.8.3 describes the typical sequence of events for a DA-less implementation.

The described principles use the following OBSAI specifications and guidelines (refer OBSAI System Reference Document and RP1 Specifications):

- OBSAI OAM&P Interface Specifications
- OBSAI HW and SW Addressing Principles
- Service Location Protocol Specifications (RFC 2608)

It is assumed that all physical module properties are described in a Module Property File (MPF) provided by the module vendor. The file format is not specified but it is recommended that it be in XML-format.

3.8.1 Concepts and Definitions

Auto Detection: Service provided by CCM and other modules to monitor for Module Ready Indication messages at configured intervals sent by other modules and CCM respectively. The details of the Module Ready Indication Message are provided in the OBSAI OAM&P CM Interface Specification.

Copyright 2006, OBSAI, All Rights Reserved.
Confidential & Proprietary Information

Module/Resource Removal: Physical removal or failure related unavailability of a module/resource.

Start-up: Sequence of events that occur within a module when it or the entire BTS is restarted.

3.8.2 Principles for DA-based Implementation

Typical CCM Start-up scenario (after boot-up and address generation) for DA-based implementation is illustrated in section 3.8.2.1. Module Start-up scenario is illustrated in section 3.8.2.2. Module Removal scenario is described in section 3.8.2.3.

3.8.2.1 CCM Start-up

The following sequence diagram applies to the case of the Active CCM:

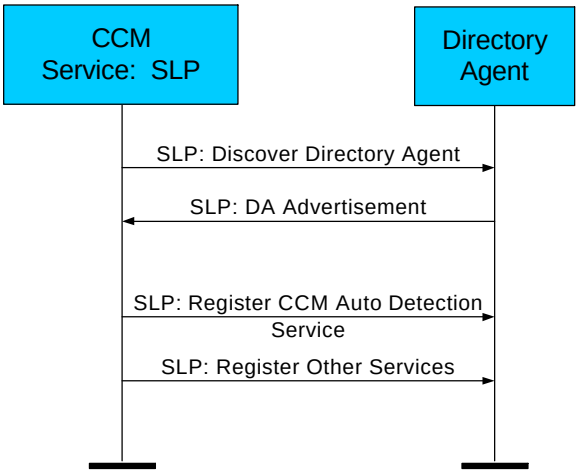

Figure 3.8-2 CCM Start-up (DA-based)

Copyright 2006, OBSAI, All Rights Reserved.
Confidential & Proprietary Information

3.8.2.2 Module Start-up (except CCM)

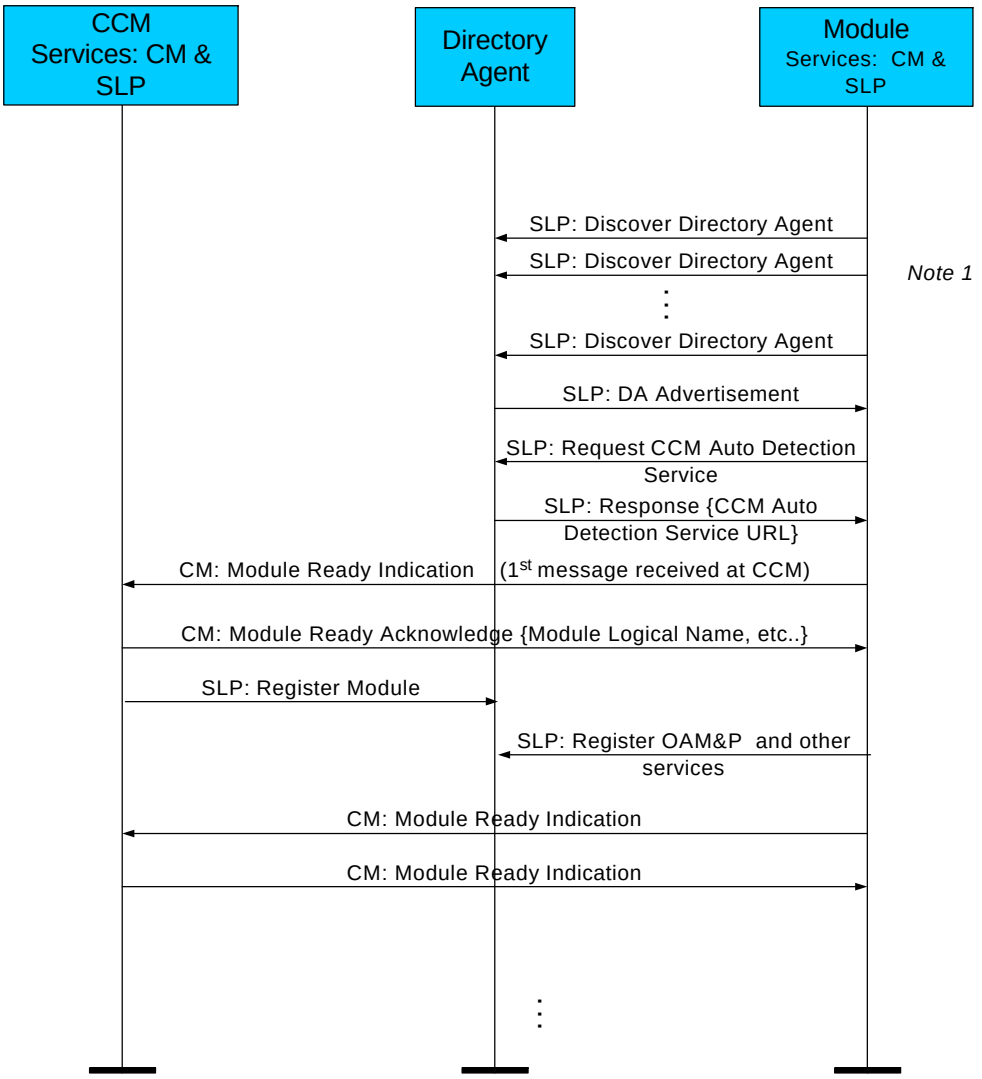

Figure 3.8.2.23.8-3 Module Start-up (except CCM)

Note 1: The discover Directory Agent message shall be repeated until a response is received.

3.8.2.3 Module/Resource Removal

This section illustrates the detection of ungraceful removal of a module/resource. It is assumed that module/resource de-registers its services when it is removed gracefully.

Copyright 2006, OBSAI, All Rights Reserved.
Confidential & Proprietary Information

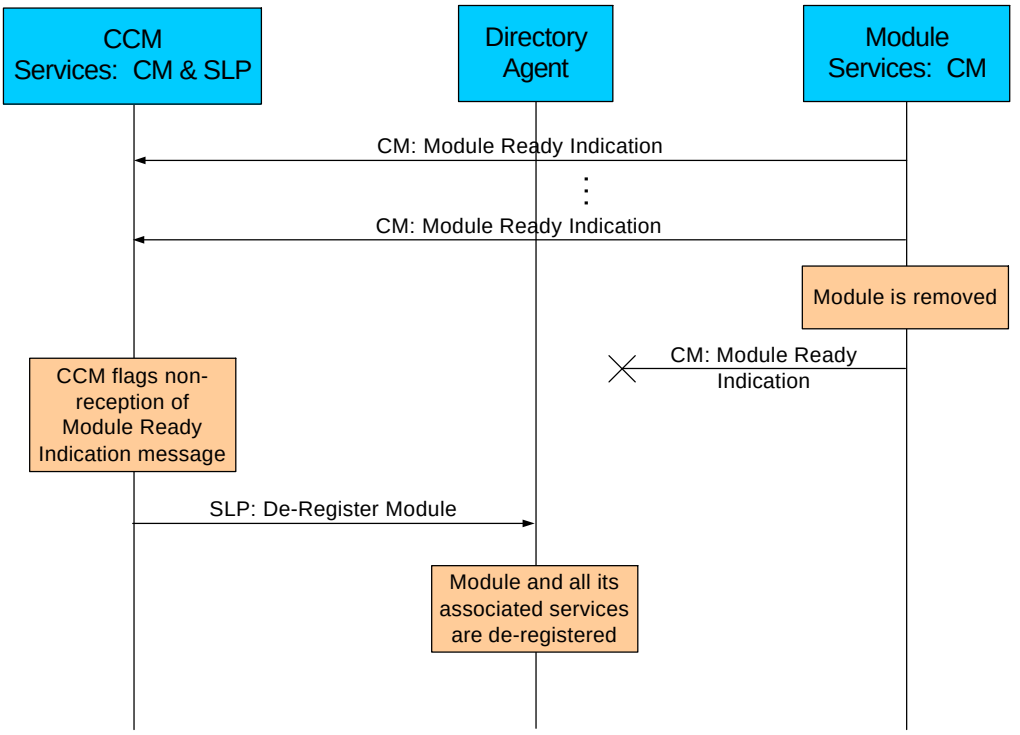

Figure 3.8-4 Module Start-up (except CCM)

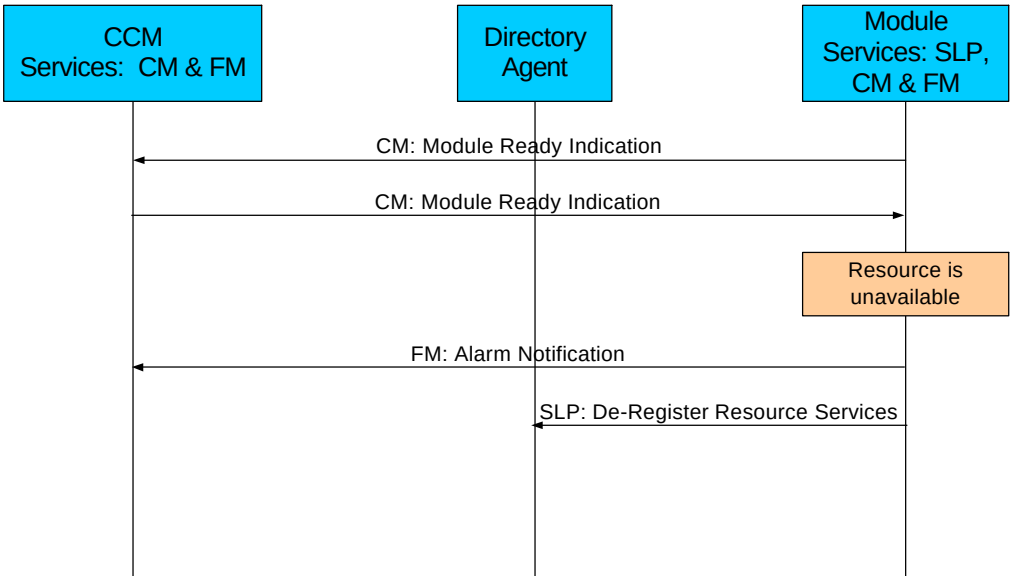

Figure 3.8-5 Module Start-up (except CCM)

3.8.3 Principles for DA-less Implementation

Typical hot insertion scenario (after boot-up and address generation) for DA-less implementation is illustrated in section 3.8.3.2 and the corresponding hot removal scenario is illustrated in section 3.8.3.3.

Copyright 2006, OBSAI, All Rights Reserved.
Confidential & Proprietary Information

3.8.3.1 CCM Start-up

The following sequence diagram applies to the case of the Active CCM. The CCM shall advertise its auto-detection services when it is restarted.

Figure 3.8-6 CCM Start-up (DA-less Implementation)

Copyright 2006, OBSAI, All Rights Reserved.
Confidential & Proprietary Information

3.8.3.2 Module Start-up (except CCM)

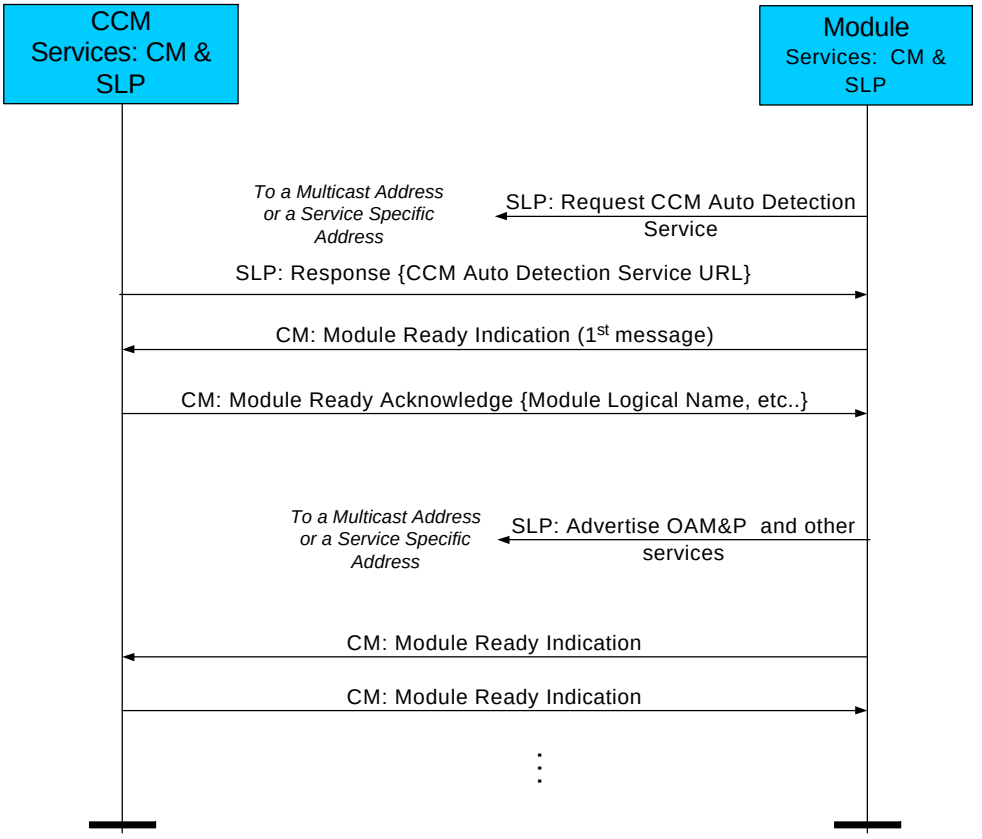

Figure 3.8-7 Module Start-up (except CCM)

3.8.3.3 Module Removal

This section illustrates the detection of ungraceful removal of a module/resource

Copyright 2006, OBSAI, All Rights Reserved.
Confidential & Proprietary Information

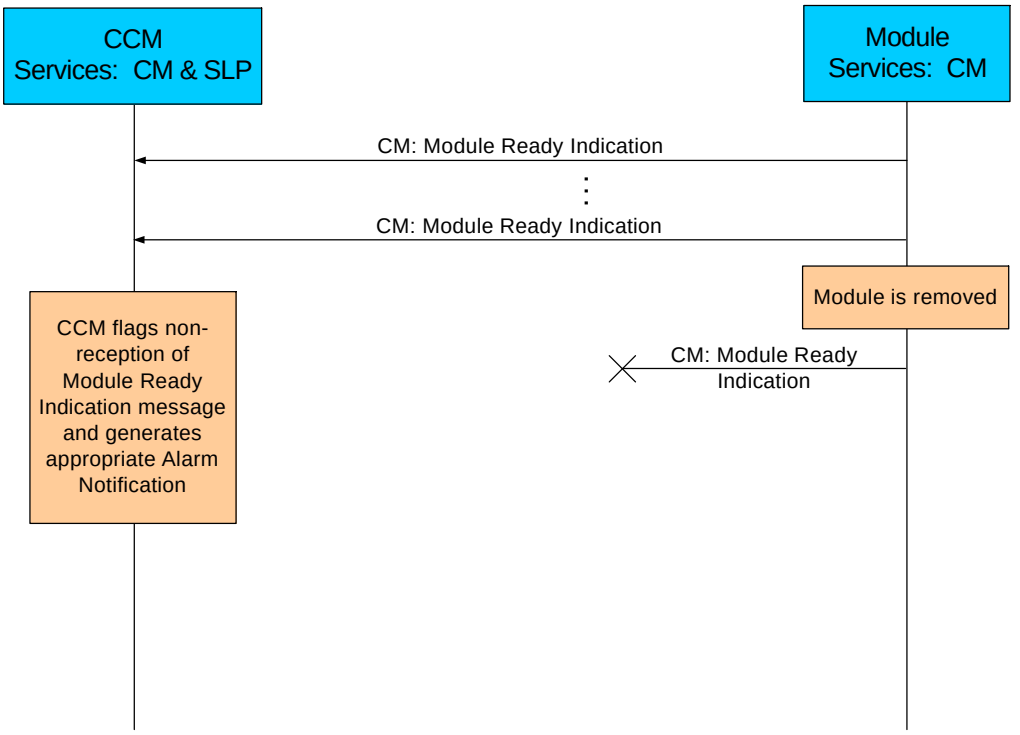

Figure 3.8-8 Module Start-up (except CCM)

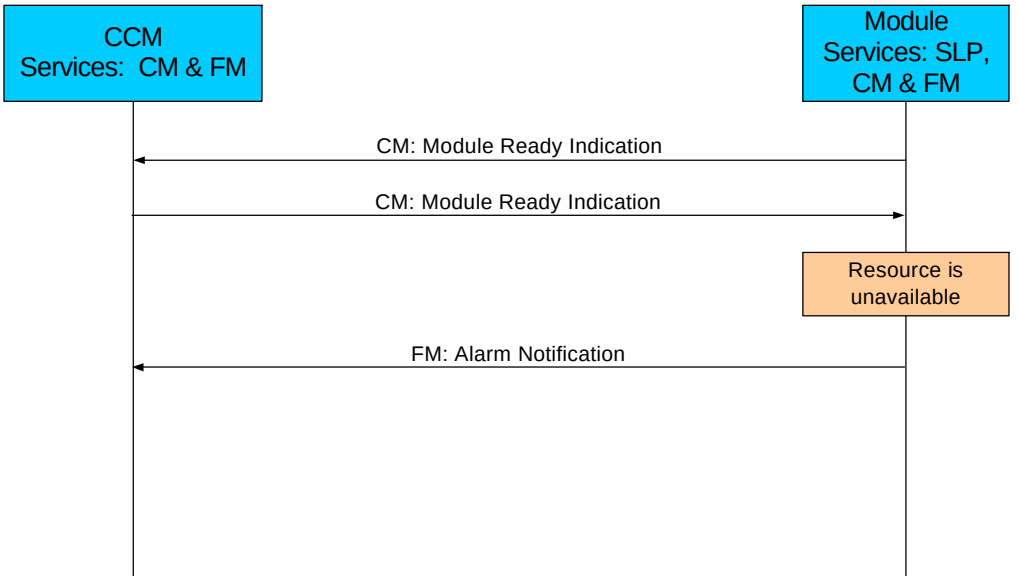

Figure 3.8-9 Module Start-up (except CCM)

Copyright 2006, OBSAI, All Rights Reserved.
Confidential & Proprietary Information

T-Mobile Ex. 1009

3.9 Redundancy and Availability Criteria

The OBSAI architecture supports base stations with an availability of up to 99.999%. The actual availability of each BTS is determined to a large extent by the BTS integrator and the modules that are designed into the BTS. The BTS integrator determines the requirement for BTS availability on a case-by-case basis. Use of module redundancy to achieve high availability is not a requirement- it is optional. However, if redundancy is used it shall adhere these specifications.

3.9.1 N+1 Redundancy

To support a capability for an availability of 99.999%, the OBSAI BTS shall be configurable to support the following redundancy options:

- The Transport Block shall support 1:1 redundancy.
- The Control and Clock Block shall support 1:1 redundancy.
- The Baseband Block shall support 1:N redundancy for up to nine (9) modules.
- The RF Block shall support 1:N redundancy for up to 9 modules.

3.9.2 RP1 and RP2 Ethernet Redundancy Principles

3.9.2.1 Overview

Since the TM and the CCM are both critical to the operation of the base station, they have the most rigorous requirements during a switchover. During a switchover of one of these modules, no calls that are currently in progress may be dropped. Any calls in the process of being established may be blocked. If redundancy is required on the CCM and TM, then 1+1 redundancy shall be used.

A failure in any other module (BBM, RFM, GPM, or others) might only affect a portion of the active calls. The requirement for the number of calls that may be dropped during a switchover in one of these modules is not specified. If redundancy is required on the BBM, RFM, and GPM modules, then N+1 redundancy shall be used.

As specified in the OBSAI RP2 Specification, the RP1 and RP2 Ethernet network shall be implemented as a dual star with a TM at the center of each. Each node on the RP1 and RP2 Ethernet network shall contain two independent Ethernet interfaces, one for connection to each star. The TM modules shall be in an Active/Standby relationship and the inactive TM shall not switch any packets from one port to another.

Copyright 2006, OBSAI, All Rights Reserved.
Confidential & Proprietary Information

3.9.2.2 1+1 Redundancy

Between the active and standby instances of 1+1 redundant modules, certain information must be synchronized to allow a rapid switchover in case of a failure. These specifications will not dictate what information gets synchronized, or how it gets synchronized. The CCM and the TM interfaces shall contain dedicated proprietary buses that can be used to facilitate this synchronization of information. The respective module interface specifications will contain electrical signaling specifications for these busses, but the message formats and content shall be left unspecified.

All notifications of switches in activity (to other modules on the Ethernet fabric) shall occur across RP1. No other out-of-band signals shall be used to indicate to other modules that a switch has occurred, or which module is currently active.

Any communication between modules of the same 1+1 redundant set that occurs during the fault detection, fault isolation, activity switch negotiation phases will be left unspecified. Only information that traverses RP1 between modules of different types, such as change in in activity notification from failover, will be specified.

Faults in 1+1 redundant modules cause one of two types of failures: node failures or fabric failures. Nodes are all modules, other than the TM, which use the RP1 and RP2 Ethernet fabric for communication. Fabric failures are caused by faults in the interconnection between modules, or faults in the TM itself.

3.9.2.3 Node Failures

1+1 redundant nodes share a common virtual IP address and a common virtual MAC address that all other modules in the OBSAI BTS use to communicate with the currently active module.

Each 1+1 redundant node shall also have a unique physical IP and physical MAC address that can be used to communicate directly with any individual node.

Other nodes on the network shall map the services performed by the 1+1 redundant nodes to the virtual IP address shared by them. Other nodes on the network shall map the shared virtual IP address with the shared MAC address.

Upon failure of an active module, its inactive mate shall adopt the commonly shared IP and MAC addresses and shall immediately issue a gratuitous ARP. Using the information contained in this gratuitous ARP, the TM shall adjust its port mappings to associate the newly active module to the shared MAC address. All other nodes in the

Copyright 2006, OBSAI, All Rights Reserved.
Confidential & Proprietary Information

system will not need to take any further action to resume communication with the services provided by the 1+1 redundant set.

3.9.2.4 Fabric Failures

Upon failure of a TM or of the RP1 and RP2 Ethernet network interconnection between modules, the secondary TM shall become active and the secondary Ethernet star network shall become active. At that time, both the primary TM and the primary Ethernet star will become inactive. The TM modules themselves will negotiate this switch in activity. At the time of the TM switchover, a “break before make” connection should be made in the activation/deactivation of the Ethernet stars. All other modules (nodes) in the network shall be notified about this switchover. Further flows of notifications will ensure reach ability of any active module from any other active module over the active Ethernet star network.

3.10 Mechanical and Dimensioning Requirements

3.10.1 Overview

An OBSAI platform is made up of one or more linked shelves. These may be divided based on module type and other factors such as size, cooling, or cabling requirements. For example, a platform could have an “RF shelf” supporting large-pitch high-power RF modules, and a “baseband shelf” with all other modules at smaller pitch.

The basic mechanical elements of an OBSAI shelf are:

- Plug-in modules containing specific electronic functions along with front and rear interface connectors. Each module shall have a faceplate with two extractor handles, and rear backplane connectors. It may also include covers on component side 2 and/or component side 1. Both sealed and unsealed (open) modules shall be supported.
- Backplane providing connections between modules as well as power distribution and grounding.
- Subrack supporting the backplane as well as providing module alignment and support.
- Optional Rear Transition Module (RTM) allowing board-specific interface connection from the rear. The RTM, if used, shall have a faceplate and two extractor handles. It may also include covers on component side 2 and/or component side 1.

This section defines dimensioning for modules, card guides, and backplane connectors pertinent to the BB, TM, CCM & GPM and is subject to change. Dimensions and connectors for the RFM are defined separately in the RFM Specification.

Copyright 2006, OBSAI, All Rights Reserved.
Confidential & Proprietary Information

3.10.1.1 Nomenclature

3.10.1.1.1 Orientation

The position and orientation of OBSAI modules is not defined by this document. However, for clarity within this document, the orientation of modules within a subrack will be assumed in a vertical orientation. When viewed from the front, component side 1 faces right, and component side 2 faces left. The top edge of the front board is closest to the power connector.

If the physical implementation of a shelf is oriented horizontally, when viewed from the front, the component side 1 faces upwards and component side 2 faces downwards.

3.10.1.1.2 Backplane Connectors

Module backplane connectors may vary based on module type or application. Figures in this section depict modules with two data connectors and two power connectors. They are illustrative only.

3.10.1.2 Sealed Modules

Sealed modules shall be fully enclosed. They require a gasketed interface to backplane assemblies and shall provide ingress protection to IP54. Additional backplane connectors and rear-transition modules (RTM) are possible, and are not defined by this document. Sealed modules shall fit within the defined sealed module envelope and shall follow the module guide restrictions.

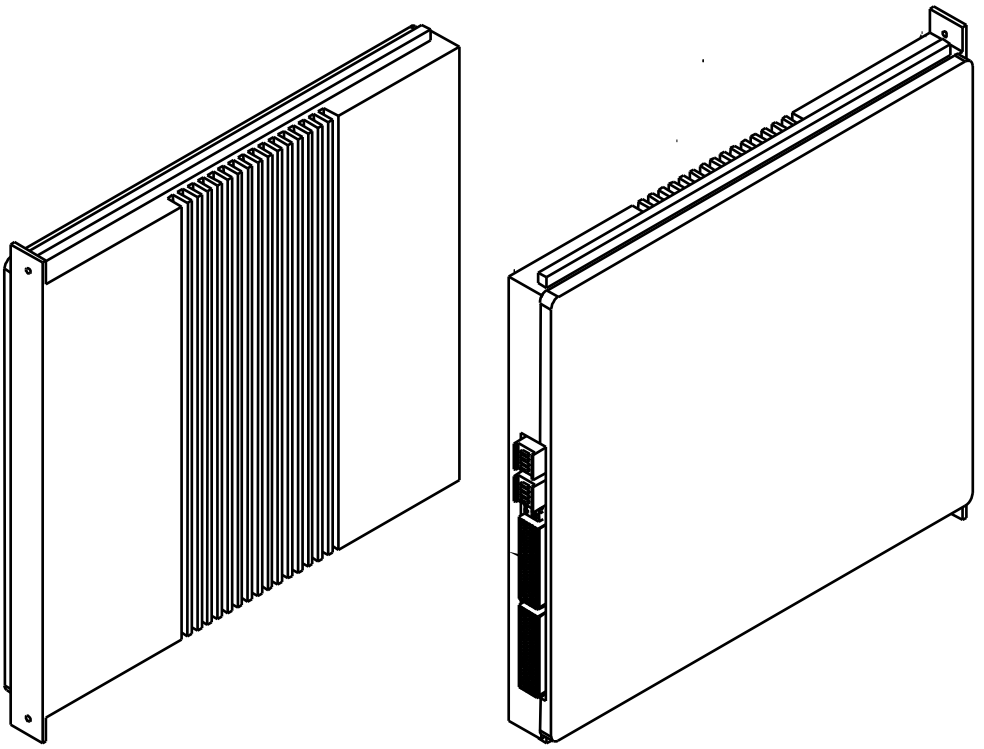

Copyright 2006, OBSAI, All Rights Reserved.
Confidential & Proprietary Information

Figure 3.10-1 Sealed Module Perspective Views

3.10.1.3 Unsealed Modules

There are no enclosure requirements for unsealed modules. Additional backplane connectors and rear-transition modules (RTM) are possible, and are not defined by this document. Unsealed modules shall fit within the defined module envelope and shall follow the module guide restrictions.

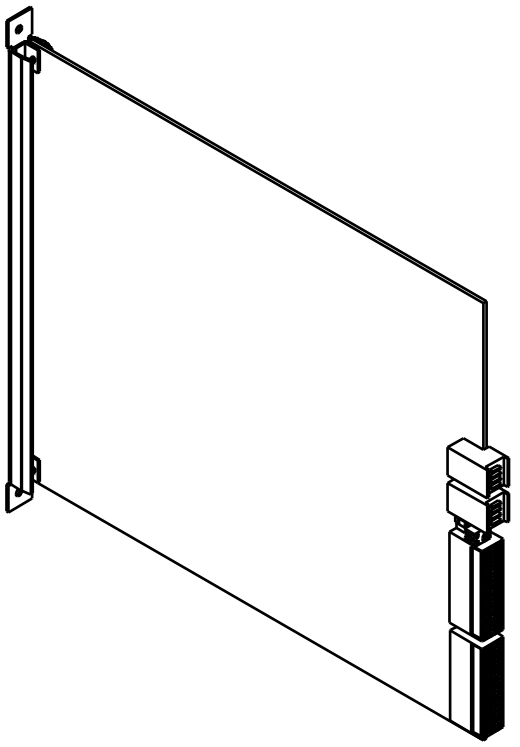

Figure 3.10-2 Unsealed Module Perspective View

3.10.1.4 Module Reference Dimensions

Sealed and Unsealed modules are designed for a nominal depth from the inside of the faceplate to the backplane surface of 295.6 mm. Both modules also have the same backplane connector positions, relative to the module centerline.

Copyright 2006, OBSAI, All Rights Reserved.
Confidential & Proprietary Information

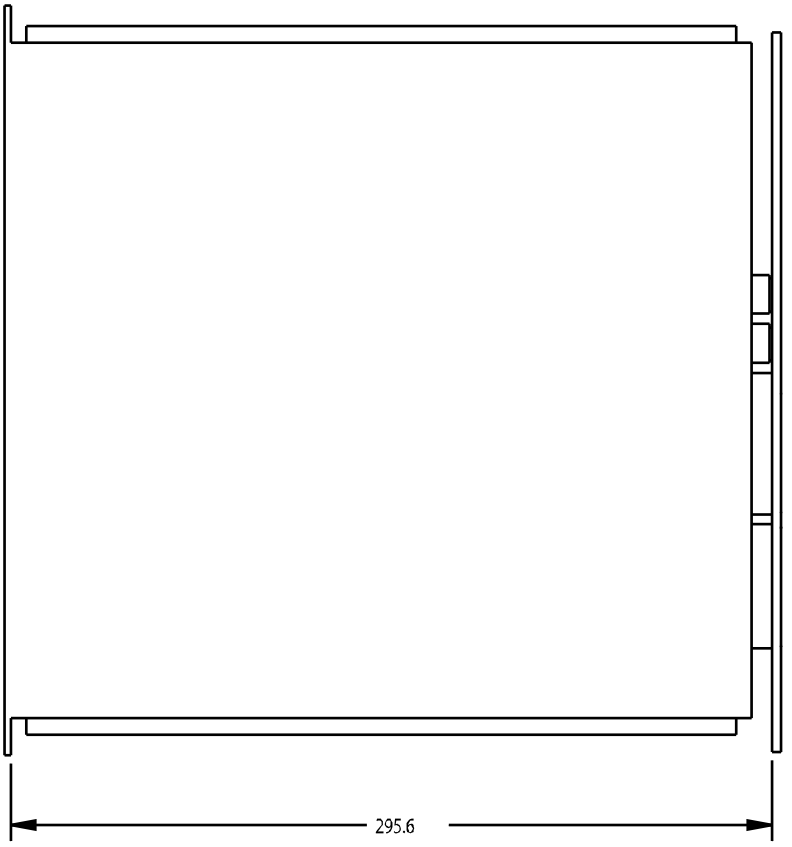

Figure 3.10-3 Module Depth Reference Dimension

3.10.2 Sealed Module Common Features (Excluding RF Modules)

The section applies to Control and Clock Block modules, Baseband Block modules, Transport Block modules and General Purpose Modules.

3.10.2.1 Dimensions

The nominal height of sealed modules shall be 275.00 mm including guide rail. The nominal depth from the inside of the faceplate to the backplane surface shall be 295.6 mm. The lower faceplate mounting position shall be the datum for locating the faceplate, connectors, and alignment pins. The chassis will provide two metallic module guides connected to shelf ground. This module guide may be a maximum of 3 mm in height. Sealed modules shall have 6.0 mm wide rails that are part of the enclosure, and fits into the guide.

Copyright 2006, OBSAI, All Rights Reserved.
Confidential & Proprietary Information

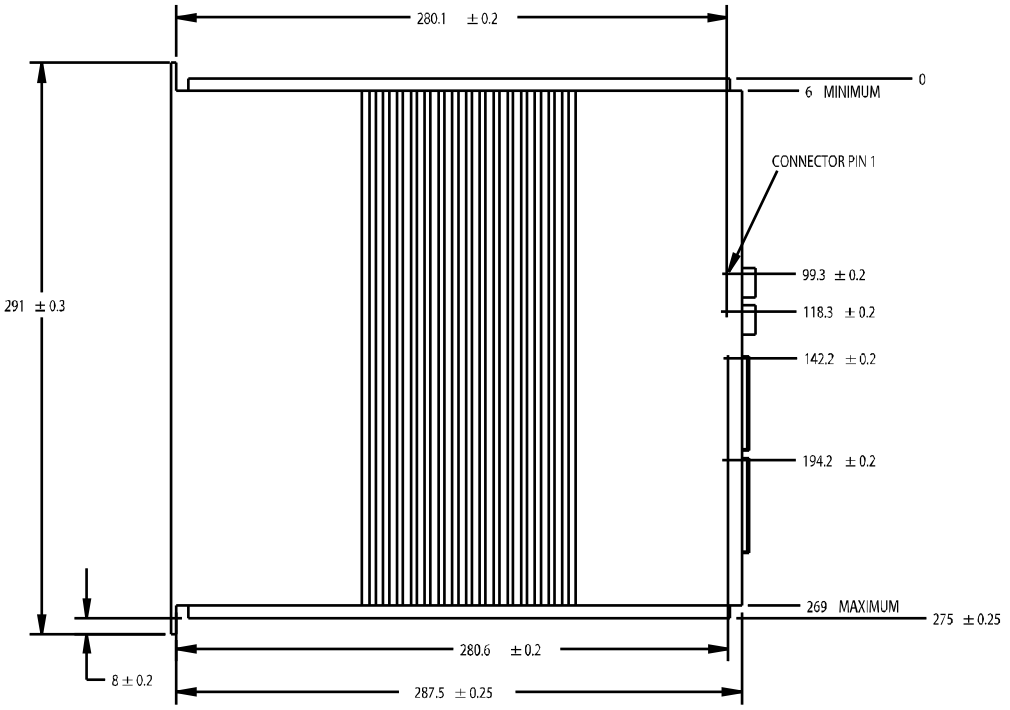

Figure 3.10-4 Sealed Module Dimensions, Side View

Copyright 2006, OBSAI, All Rights Reserved.
Confidential & Proprietary Information

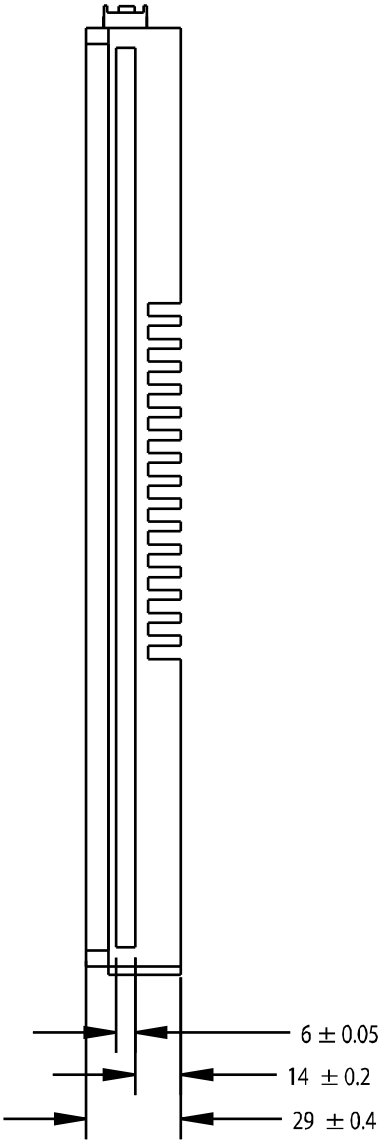

Figure 3.10-5 Sealed Module Dimensions, Top View

Copyright 2006, OBSAI, All Rights Reserved.
Confidential & Proprietary Information

T-Mobile Ex. 1009

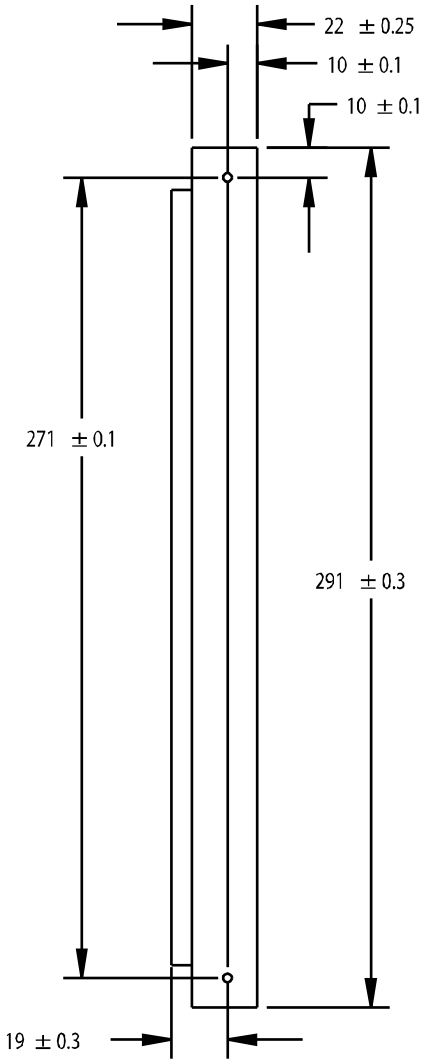

Figure 3.10-6 Sealed Module Dimensions, Front View

Copyright 2006, OBSAI, All Rights Reserved.
Confidential & Proprietary Information

T-Mobile Ex. 1009

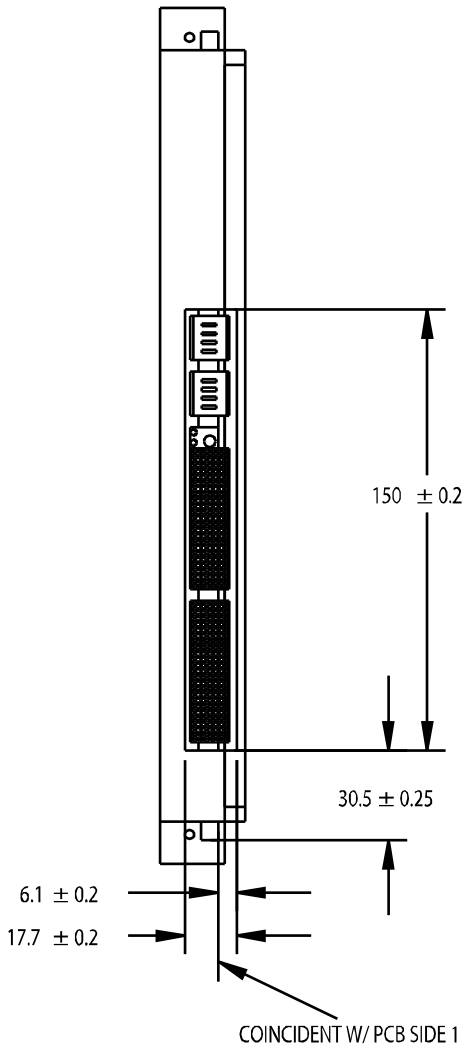

Figure 3.10-7 Sealed Module Dimensions, Rear View

3.10.2.2 PCB Thickness

The thickness of a PCB that is within the enclosure of a sealed module and is not defined.

3.10.2.3 Module Pitch

All sealed module dimensions are based on a module-to-module pitch of 30.48 mm (1.2 inch). Modules wider than this should be larger by even multiples of 15.24 mm.

3.10.2.4 Component Height Limits

Maximum component height in sealed modules is dependent on the method of module construction, and is not defined in this specification. All components shall remain within the specified envelope.

Copyright 2006, OBSAI, All Rights Reserved.
Confidential & Proprietary Information

3.10.2.5 Faceplate

The front and optional RTM faceplates provide for module fastening, extraction and insertion, and can be a location for external interfaces. They shall include two extractor handles, and retention screws. The faceplate metal thickness shall be between 1.0 mm and 3.0 mm.

The front faceplate shall have two captive retentions screws. These screws shall be M3, with a #2 Phillips head.

3.10.2.6 Electrostatic Discharge (Sealed Module)

Each sealed module shall provide a conductive path from the guide rails to all exposed metallic surfaces of the enclosure. When a module is inserted into a Subrack, it contacts the card guide, which is connected to shelf ground. This provides a discharge path before the backplane connectors engage and when the front board comes to rest after being completely installed. The module logic ground shall have a direct, low-resistance connection to the module enclosure and faceplate (chassis ground).

3.10.2.7 Module Enclosure

Modules shall be covered and sealed as needed. Envelope limits for component sides 1 and 2 shall not be exceeded.

3.10.3 Unsealed Module Common Features

The section applies to Control and Clock Block modules, Baseband Block modules, Transport Block modules and General Purpose Modules.

3.10.3.1 Dimensions

The nominal PCB height for unsealed modules shall be 233.35 mm. The nominal depth from the inside of the faceplate to the backplane surface shall be 295.6 mm. The lower faceplate mounting position shall be the datum for locating the faceplate, connectors, and alignment pins. The chassis will provide two metallic module guides connected to shelf ground. This module guide may be a maximum of 3 mm in height. Unsealed modules shall have a 2 mm thick printed circuit board that fit into the guide. An additional clearance of 1.5 mm is defined on unsealed modules between any traces and any metallic guide rail. This component keep-out area also contains circuitry to provide electrostatic discharge (ESD) protection.

The component keepout areas located on the top and bottom edges of the PCB shall be 4.5mm to allow for the guides and clearance requirements.

Copyright 2006, OBSAI, All Rights Reserved.
Confidential & Proprietary Information

Note: The unsealed module dimensions and connector positions allow the same PCB to be used as part of a sealed module.

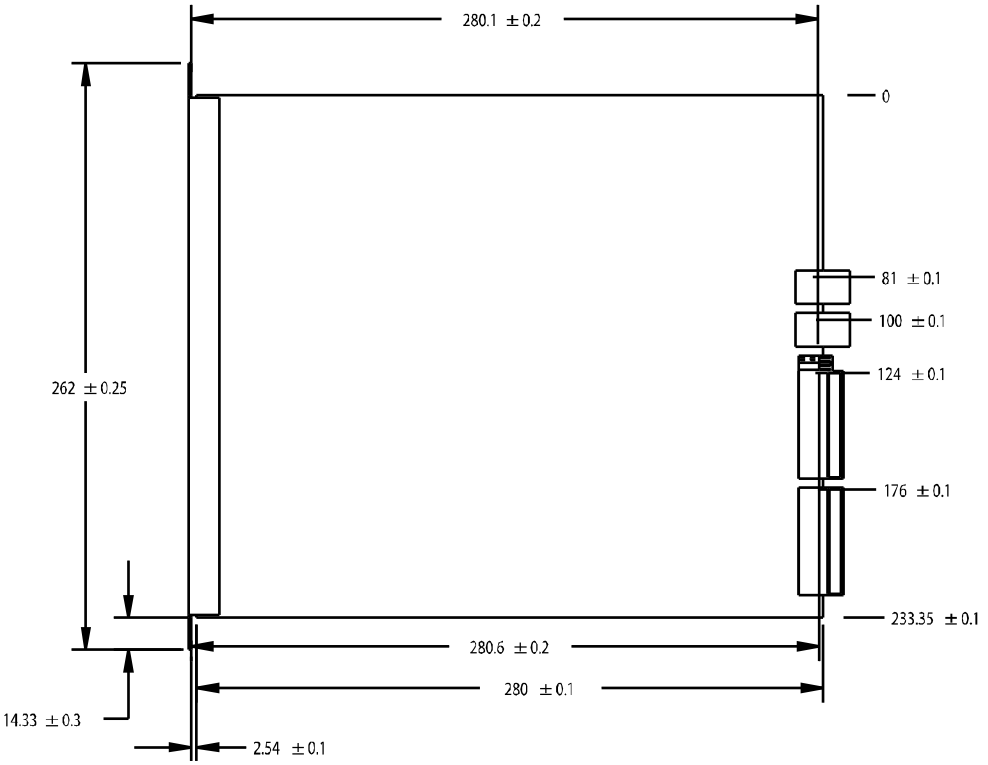

Figure 3.10-8 Unsealed Module Dimensions, Side View

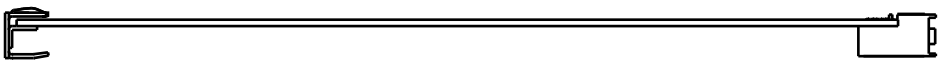

Figure 3.10-9 Unsealed Module Dimensions, Top View

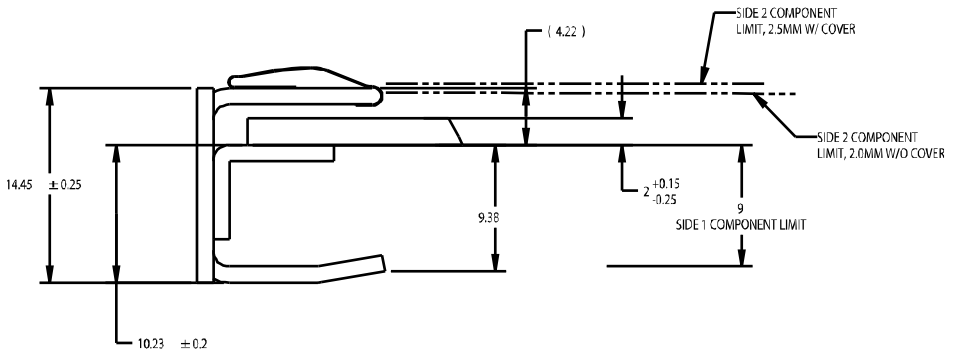

Figure 3.10-10 Unsealed Module Dimensions, Top Detail

Copyright 2006, OBSAI, All Rights Reserved.
Confidential & Proprietary Information

3.10.3.2 PCB Thickness

The PCB thickness of unsealed modules, or exposed PCB edges, shall be 2.0 +0.15/-0.25mm.

3.10.3.3 Module Pitch

All unsealed module dimensions are based on a module-to-module pitch of 15.24 mm (0.6 inch). Modules wider than this should be larger by even multiples of 15.24 mm.

3.10.3.4 Component Height Limits

Component bodies in unsealed modules shall not extend beyond the defined module envelope. These limits provide for electrical and mechanical clearance between adjacent modules and shelf components.

Side 2 component height will be dependent on the space required for an optional cover (including insulation requirements for a conductive cover), and will take into account PCB warp and bow.

3.10.3.5 Faceplate

The front and optional RTM faceplates provide for module fastening, extraction and insertion, and can be a location for external I/O interfaces. They shall include a component side 2 EMC gasket, two extractor handles, and retention screws. The faceplate metal thickness shall be between 1.0 mm and 3.0 mm.

The front faceplate shall have two captive retentions screws. These screws shall be M3, with a #2 Phillips head.

Copyright 2006, OBSAI, All Rights Reserved.
Confidential & Proprietary Information

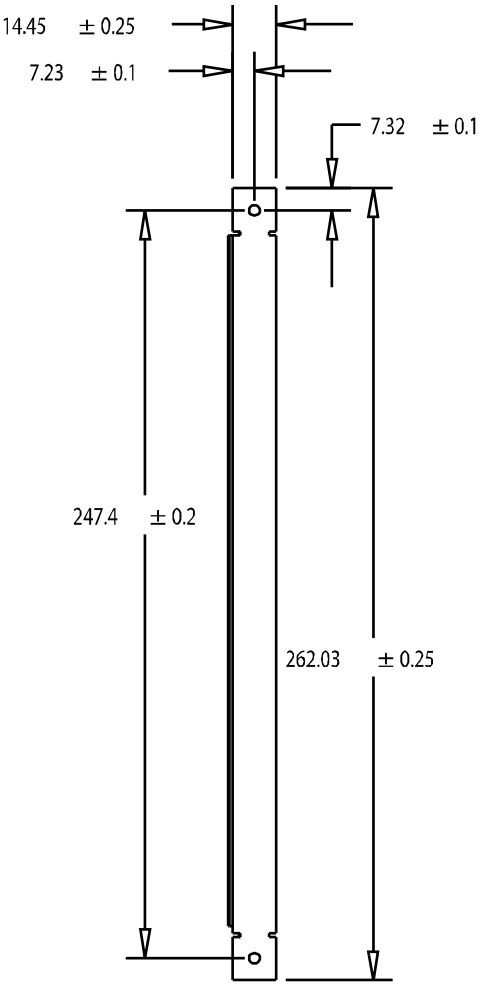

Figure 3.10-11 Unsealed Module Dimensions, Front View

3.10.3.6 Electrostatic Discharge (Unsealed Module)

Each unsealed module shall provide a two-segment discharge strip located on Component Side 1 along the bottom edge of the PCB. A discharge strip shall not be used along the top edge of the PCB. This strip shall withstand 250 insertion/extraction cycles and be dimensioned as shown. When a front board is inserted into a subrack, it contacts to the ESD clip, which is connected to chassis ground. The ESD strip is divided into two segments to achieve a “controlled discharge.” The ESD strip provides a discharge path before the backplane connectors engage and when the front board comes to rest after being completely installed. Segment 1 shall be connected to the face plate through a 10 MOhm ± 20% resistance to discharge any built up static charge from the front board or user. The resistor is used to limit the amount of discharge current. The 10 Mohm discharge resistor shall have a minimum voltage rating of 2 kV, and be rated for at least ¼ Watt dissipation. Segment 2 provides a discharge path from the face plate to shelf ground when the entire system is assembled. It shall make a

Copyright 2006, OBSAI, All Rights Reserved.
Confidential & Proprietary Information

gas-tight connection directly to the face plate. The module logic ground shall have a direct, low-resistance connection to the module faceplate (chassis ground).

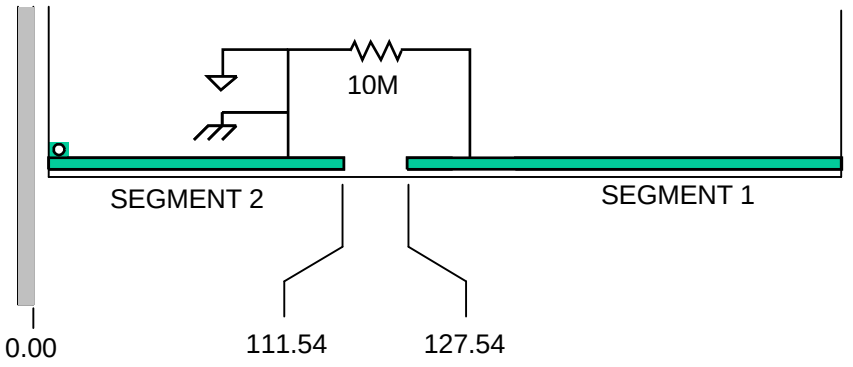

Figure 3.10-12 ESD Strip Schematic and Dimensions

3.10.3.7 Optional Module Cover

Modules may be covered or sealed as needed. Envelope limits for component sides 1 and 2 shall not be exceeded.

3.10.4 RF Module Common Features

RF module common features are to be provided in a later version of this document.

3.10.5 Rear Transition Module

Optional rear transition modules (RTM) allow vendor-specific connection to a front module from the rear of the shelf. Each RTM is on the same plane as the associated front module. It must follow the same component side 1 and 2 envelope limits as the front module. The function and connections of the RTM are vendor defined.

3.11 Backplane

OBSAI specifications focus on modules and their interfaces. The actual BTS design is beyond the scope of OBSAI. For the sake of clarity, however, guidelines are given where appropriate. In that sense, OBSAI does not specify a BTS backplane as such. Backplane interface specifications (electrical characteristics and pin assignments) are part of respective Module Interface Specifications.

Copyright 2006, OBSAI, All Rights Reserved.
Confidential & Proprietary Information

3.11.1 Data Connections

This subsection defines categories of electrical signals at the backplane interface (except power interface):

- Common Signals. Common Signals are common to all modules and shall be supported. Common Signals are assigned to fixed pin positions at the Data Connector(s) which are present at all modules. Examples are:
    - Shelf ID
    - Slot ID
    - RP1 System Clock Input (redundant)
    - RP1/2 Ethernet Port (redundant)
    - Non-connect (e.g. - Debug Port(s), Production Test Port(s), Programming Port(s))
- Module Type Specific Signals. Module Type Specific Signals are common to a certain module type (TM, CCM, BBM, RFM) and shall be supported. Module Type Specific Signals shall be assigned to fixed pin positions at the Data Connector(s). Examples are:
    - Transport Module

- Ethernet Fabric Ports (fan-out)

- Reference Clock Output

    - Control and Clock Module

- System Clock Outputs (fan-out)

- Reference Clock Inputs

- Module Type Unspecified Signals. Module Type Unspecified Signals are optional. Their functional and electrical characteristics are not specified. If present, Module Type Unspecified Signals shall be assigned to a range of pin positions at the Data Connector(s). The range of pin positions shall be fixed for a certain module type, but may differ between module types. Examples are:
    - Redundancy Control Port(s)
    - Link(s) to General Purpose Module(s)
- Unspecified Signals. Unspecified Signals are optional. Their functional and electrical characteristics are not specified. If present, Unspecified Signals shall be assigned to one or more unspecified connectors. Examples are:
    - Link(s) to General Purpose Module(s)
    - Support for RTM

Copyright 2006, OBSAI, All Rights Reserved.
Confidential & Proprietary Information

Refer to Appendices B and C for the data connector specifications.

3.11.2 Power Connections

A single power bus is connected to the modules through a four-pin power connector P1, and an optional P2.

3.11.2.1 Connector Mating Sequence And Short Pins

The plug-in modules and backplane shall provide a sequenced mating such that pins will connect in three groups. There is no mating sequence requirement within a group. Upon module insertion, the mating sequence shall be:

Enclosure contact with chassis ground at the card guides.

- Logic/chassis ground. This is a long pin within the power connector.
- Power supply signals and digital signals. These are medium length pins.
- Power enable (PWR_ENA). This is a short pin within the power connector tied (on the backplane) to the PWR_NEG pin.

3.11.2.2 Power Connector Types

Power connector P1 shall be equipped with an OBSAI sequenced connector. This connector has three pin lengths, and provides the mating sequence described in the previous section.

Copyright 2006, OBSAI, All Rights Reserved.
Confidential & Proprietary Information

Table 3.11-1 Sequenced Connector Pin Characteristics For P1

P1	Pin Length	Signal
1	Medium	PWR_POS
2	Short	PWR_ENA
3	Medium	PWR_NEG
4	Long	GND

Power connector P2, if installed, can be equipped with an OBSAI sequenced or non-sequenced connector. If a sequenced connector is installed, only the two medium length pins can be used to deliver power to the module.

Table 3.11-2 Sequenced Connector Pin Characteristics For P2

P2	Pin Length	Signal
1	Medium	PWR_POS
2	Short	NC
3	Medium	PWR_NEG
4	Long	NC

If a non-sequenced connector is installed, all four medium length pins can be used to deliver power to the module.

Table 3.11-3 Non-Sequenced Connector Pin Characteristics For P2

P2	Pin Length	Signal
1	Medium	PWR_POS
2	Medium	PWR_POS
3	Medium	PWR_NEG
4	Medium	PWR_NEG

Refer to Appendices D and E for the power connector specifications.

Copyright 2006, OBSAI, All Rights Reserved.
Confidential & Proprietary Information

3.12 Module Power Interface

The shelf backplane is responsible for delivering power to all of the operating modules through their respective power connector(s). Modules and backplanes shall provide DC isolation between the power domain and the shelf logic-common and chassis domains. All conduits of the power domain shall observe the mutual creepage clearance distances between the conduits and logic-common and associated signals.

3.12.1 Module Supply Voltage

A module shall operate within either –48 VDC nominal or +24 VDC nominal (or both) power as defined below.

3.12.1.1 Nominal –48 Volt Requirement

The table below lists the requirements for -48 VDC supply power:

Table 3.12-1 -48 VDC Supply Voltage Requirements

Nominal operating voltage	-48 VDC
Maximum input voltage	-58 VDC
Maximum operating voltage	-58 VDC
Minimum operating voltage	-39.5 VDC
Minimum input voltage	0 VDC

Copyright 2006, OBSAI, All Rights Reserved.
Confidential & Proprietary Information

3.12.1.2 Nominal +24 Volt Requirement

The table below lists the requirements for +24 VDC supply power:

Table 3.12-2 +24 VDC Supply Voltage Requirements

Nominal operating voltage	+24 VDC
Maximum input voltage	+57 VDC
Maximum operating voltage	+32 VDC
Minimum operating voltage	+19.2 VDC
Minimum input voltage	0 VDC

3.12.2 Module Supply Protection

Modules shall use circuit interruptors such as fuses in series with the power bus to ensure that the current on individual power connector pins does not exceed 23 amps (derated to 21 amps in the case of all four pins carrying current). Current limiter values should be appropriate for the maximum operational current of the module.

Modules shall include protection from damage caused by a supply voltage polarity reversal.

Copyright 2006, OBSAI, All Rights Reserved.
Confidential & Proprietary Information

4 Glossary

4.1 Abbreviations

For the purposes of the present document, the following abbreviations apply:

ABBREVIATION	DESIGNATION
AAL	ATM Adaptation Layer
AAL2	ATM Adaptation Layer type 2
AAL5	ATM Adaptation Layer type 5
ADDS	Application Data Delivery Service
AMPS	Advanced Mobile Phone System
ANSI	American National Standards Institute
ARFCN	Absolute Radio Frequency Channel Number
ATM	Asynchronous Transfer Mode
BS	Base Station
BSAP	Base Station Application Part
BSC	Base Station Controller
BSMAP	Base Station Management Application Part
BSS	Base Station Subsystem
BTS	Base Transceiver System
CANID	Current Access Network Identifiers
CBC	Cell Broadcast Centre
CBS	Cell Broadcast Service
CC	Call Control
CDG	CDMA Development Group
CDMA	Code Division Multiple Access
CID	Connection Identifier (used with reference to AAL2)
CM	Connection Management
CN	Core Network
CPCH	Common Packet Channel
CRNC	Controlling Radio Network Controller
DCCH	Dedicated Control Channel

Copyright 2006, OBSAI, All Rights Reserved.
Confidential & Proprietary Information

ABBREVIATION	DESIGNATION
DCH	Dedicated Channel
DL	Downlink
DS	Direct Spread
DS0	Digital Signal Level 0
DS1	Digital Signal Level 1
DS-41	An operational mode in which the BS and MS operate with the direct spread (DS) radio layers of the UMTS system defined by 3GPP, and the upper layers defined in IS-2000 that conform to and interoperate with ANSI-41 based networks.
DTX	Discontinuous Transmission
EDGE	Enhanced Data rates for Global Evolution
EIA	Electronics Industry Association
EIB	Erasure Indicator Bit
ESN	Electronic Serial Number
EVRC	Enhanced Variable Rate Codec
FACH	Forward Access Channel
FCH	Fundamental Channel
FER	Frame Error Rate
FFS	For Further Study
FQI	Frame Quality Indicator
FSN	Frame Sequence Number
GERAN	GSM EDGE Radio Access Network
GSM	Global System for Mobile Communications
GTP	GPRS Tunnelling Protocol
IEI	Information Element Identifier
IETF	Internet Engineering Task Force
IMSI	International Mobile Subscriber Identity
IOS	Interoperability Specification
IP	Internet Protocol
IPv4	Internet Protocol, version 4
IPv6	Internet Protocol, version 6
ISDN	Integrated Services Digital Network
ISLP	Intersystem Link Protocol
ITU	International Telecommunications Union
IWF	Interworking Function
kb	kilo bits
LAC	Location Area Code

Copyright 2006, OBSAI, All Rights Reserved.
Confidential & Proprietary Information

ABBREVIATION	DESIGNATION
LI	Length Indicator
LSB	Least Significant Bit
MAC	Medium Access Control
MIN	Mobile Identification Number
MIP	Mobile IP
MM	Mobility Management
MS	Mobile Station
MSB	Most Significant Bit
MSC	Mobile Switching Center
N-AMPS	Narrow band AMPS
NAS	Non Access Stratum
NBAP	Node B Application Part
NEBS	Network Equipment-Building System
NID	Network Identification
NNSF	NAS Node Selection Function
OAM&P	Operations, Administration, Maintenance, and Provisioning
OTD	Orthogonal Transmit Diversity
PCF	Packet Control Function
PCH	Paging Channel
PDE	Position Determining Entity
PDSN	Packet Data Serving Node
PIN	Personal Identification Number
PLD	Position Location Data
PLMN	Public Land Mobile Network
PMC	Packet Mode Channel
PN	Pilot Number
PPP	Point to Point Protocol
PSTN	Public Switched Telephone Network
QCELP	Q Code Excited Linear Prediction
QOF	Quasi Orthogonal Function
QoS	Quality of Service
RAB	Radio Access Bearer
RACH	Random Access Channel
RANAP	Radio Access Network Application Part
RANDC	Random Confirmation
RANDSSD	Random SSD

Copyright 2006, OBSAI, All Rights Reserved.
Confidential & Proprietary Information

ABBREVIATION	DESIGNATION
RC	Radio Configuration
RF	Radio Frequency
RFC	Remote Feature Control
RLP	Radio Link Protocol
RNC	Radio Network Controller
RNL	Radio Network Layer
RNS	Radio Network Subsystem
SCH	Supplemental Channel
SDB	Short Data Burst
SDU	Selection/Distribution Unit
SID	System Identification
SLR	Source Local Reference
SME	Signaling Message Encryption
SOCI	Service Option Connection Identifier
SRNC	Serving Radio Network Controller
SRNC-ID	Source Radio Network Controller Identifier
SSD	Shared Secret Data
STP	Signal Transfer Point
TCP	Transmission Control Protocol
TIA	Telecommunications Industry Association
TNL	Transport Network Layer
TSB	Telecommunications Systems Bulletin
TTI	Transmission Time Interval
UDI	Unrestricted Digital Information
UDP	User Datagram Protocol
UE	User Equipment
UL	Underwriters Laboratory
UMTS	Universal Mobile Telecommunication System
USIM	UMTS Subscriber Identity Module
UTRAN	Universal Terrestrial Radio Access Network

4.2 Definition of Terms

For the purposes of the present document, the following terms and definitions apply:

Abis: designation of the interface between the Base Transceiver System (BTS) and the Base Station Controller (BSC) for IS-2000. TIA/EIA-828-A provides the specifications for this interface.

Copyright 2006, OBSAI, All Rights Reserved.
Confidential & Proprietary Information

ALCAP: generic name in 3GPP systems for the transport signaling protocols used to set-up and tear-down transport bearers

Cell: Radio Network object that can be uniquely identified by a User Equipment from a (cell) identification that is broadcasted over a geographical area from one radio node.

Controlling RNC: role an RNC can take with respect to a specific set of Node B's. There is only one Controlling RNC for any Node B. The Controlling RNC has the overall control of the logical resources of its node B's.

Globally unique MAC: A MAC address that has 24 first bits (Company_ID) assigned from IEEE. Last 24 bits shall be unique and handled within Company.

Network Interface: interface between the RNC and the Node B for 3GPP (e.g. Iub).

Locally unique MAC: A MAC address that has different scope than in Global IEEE addresses. The “u” bit is indicating local scope.

Logical MAC: A MAC address that is shared between two or more physical interfaces. Is usable e.g. in redundancy purposes. Called also “shared dynamic” in this document.

Logical Model: Logical Model defines an abstract view of a network or network element by means of information objects representing network element, aggregations of network elements, the topological relationship between the elements, endpoints of connections (termination points), and transport entities (such as connections) that transport information between two or more termination points

The information objects defined in the Logical Model are used, among others, by connection management functions. In this way, a physical implementation independent management is achieved.

Node B: logical node in the OBSAI System responsible for radio transmission / reception in one or more cells to/from the UE The logical node terminates the network interface (Iub) towards the RNC.

Physical MAC: A MAC address that is assigned to an physical interface.

Radio Link: "radio link" is a logical association between a single User Equipment and a single UTRAN access point Its physical realization comprises one or more radio bearer transmissions.

Radio Link Set: set of one or more Radio Links that has a common generation of Transmit Power Control (TPC) commands in the DL

Copyright 2006, OBSAI, All Rights Reserved.
Confidential & Proprietary Information

Radio Resources: resources that constitute the radio interface in OBSAI, e.g. frequencies, scrambling codes, spreading factors, power for common and dedicated channels

Radio Node B Application Part: Radio Network Signaling over the network interface (Iub)

Radio Network Controller: logical node in the RNS in charge of controlling the use and the integrity of the radio resources

Radio Network Subsystem: RNS can be either a full UTRAN or only a part of a UTRAN. An RNS offers the allocation and release of specific radio resources to establish means of connection in between an UE and the UTRAN. A Radio Network Subsystem contains one RNC and is responsible for the resources and transmission/reception in a set of cells.

Universal Terrestrial Radio Access Network: UTRAN is a conceptual term identifying that part of the network which consists of RNCs and Node Bs between Iu an Uu.

Unique MAC: A MAC address needs to be unique within a BTS LAN.

User Equipment: Mobile Equipment with one or several UMTS Subscriber Identity Module(s). A device allowing a user access to network services via the Uu interface.

UTRAN Access Point: conceptual point within the UTRAN performing radio transmission and reception
A UTRAN access point is associated with one specific cell, i.e. there exists one UTRAN access point for each cell. It is the UTRAN-side end point of a radio link.

Uu: Radio interface between UTRAN and the User Equipment

Copyright 2006, OBSAI, All Rights Reserved.
Confidential & Proprietary Information

5 References

5.1 American National Standards Institute (ANSI)

ANSI T1.102 - 1993, Digital Hierarchy - Electrical Interfaces.

ANSI T1.403 - 1995 Network to Customer Installation - DS1 Metallic Interface.

5.2 TIA/EIA

TIA/EIA/IS-2000.1-A, Introduction to cdma2000 Standards for Spread Spectrum Systems, March, 2000.

TIA/EIA/IS-2000.2-A, Physical Layer Standard for cdma2000 Spread Spectrum Systems, March, 2000.

TIA/EIA/IS-2000.3-A, Medium Access Control (MAC) Standard for cdma2000 Spread Spectrum Systems, March, 2000.

TIA/EIA/IS-2000.4-A, Signaling Link Access Control (LAC) Standard for cdma2000 Spread Spectrum Systems, March, 2000.

TIA/EIA/IS-2000.5-A, Upper Layer (Layer 3) Signaling Standard for cdma2000 Spread Spectrum Systems, March, 2000.

TIA/EIA/IS-2000.6-A, Analog Signaling Standard for cdma2000 Spread Spectrum Systems, March, 2000.

TIA/EIA-95-B, Mobile Station-Base Station Compatibility Standard for Wideband Spread Spectrum Cellular Systems, February, 1999.

TIA/EIA-41-D, Cellular Radio Telecommunications Intersystem Operations, February 1996.

TIA/EIA-97-C, Recommended Minimum Performance Standard for Base Stations Supporting Dual-Mode Spread Spectrum Cellular Mobile Stations, September, 1999.

TIA/EIA/IS-733-1, High Rate Speech Service Option 17 for Wideband Spread Spectrum Communications Systems Addendum 1, September 1999

Copyright 2006, OBSAI, All Rights Reserved.
Confidential & Proprietary Information

TIA/EIA IS-828, BTS-BSC Inter-operability (Abis Interface), version 2, July 2001.

5.3 Telcordia

Telcordia Technologies Generic Requirements GR-63-CORE: Network Equipment-Building System (NEBS) Requirements: Physical Protection, Issue 1, October 1995.

Telcordia Technologies Generic Requirements GR-487-CORE: Generic Requirements for Electronic Equipment Cabinets, Issue 2, March 2000.

Telcordia Technologies Generic Requirements GR-1089-CORE: Electromagnetic Compatibility and Electrical Safety - Generic Criteria for Network Communications Equipment, Issue 2, December 1997, with Rev 1, February 1999.

5.4 Underwriters Laboratory (UL)

UL 60950 (formerly UL1950), third edition: Standard for Safety for Information Technology Equipment, 1995.

5.5 Government

Code of Federal Regulations Title 47: Telecommunications, Revised October 1, 1999.

5.6 ITU

ITU Recommendation G.703 Physical/Electrical Characteristics of Hierarchical Digital Interfaces.

5.7 IEEE

[IEEE Std 802.3] IEEE 802.3, 2000 Edition (ISO/IEC 8802-3: 2000 (E)), IEEE Standard for Information technology--Telecommunications and information exchange between systems--Local and metropolitan area networks--Specific requirements--Part 3: Carrier Sense Multiple Access with Collision Detection (CSMA/CD) Access Method and Physical Layer Specifications

[IEEE Std 802.16d] IEEE802.16-2004: Air Interface for Fixed Broadband Wireless Access Systems

[IEEE Std 802.16e] IEEE P802.16e/D12, “Draft IEEE Standard for Local and metropolitan area networks. Part 16: Air Interface for Fixed and Mobile Broadband Wireless Access Systems Amendment for

Copyright 2006, OBSAI, All Rights Reserved.
Confidential & Proprietary Information

Physical and Medium Access Control Layers for Combined Fixed and Mobile Operation in Licensed Bands," October 2005

5.8 IETF

RFC 768: "User Datagram Protocol", (8/1980)

RFC 791 (1981): "Internet Protocol".

[RFC2131] Dynamic Host Configuration Protocol

[RFC2132] DHCP options and BOOTP Vendor Extensions

RFC 2460: "Internet Protocol, Version 6 (Ipv6) Specification".

RFC 2474: "Definition of the Differentiated Services Field (DS Field) in the IPv4 and IPv6 Headers " December 1998

RFC 2570, Introduction to SNMPv3 (April 1999)

RFC 2571, An Architecture for Describing SNMP Management Frameworks (May 1999)

RFC 2572, Message Processing and Dispatching (May1999)

RFC 2573, SNMP Applications (April 1999)

RFC 2574, User-based Security Model (April 1999)

RFC 2575, View-based Access Control Model (April 1999)

RFC 2576, (PROPOSED STANDARD), Coexistence between SNMP Version 1, Version 2, and Version 3 (March 2000)

[RFC2608] Service Location Protocol, version 2

[RFC2609] Service Templates and Service: Schemes

[RFC2614] An API for service location

[RFC3111] Service Location Protocol Modifications for IPv6

[RFC3513] IPv6 Addressing Architecture

5.9 3rd Generation Partnership Project (3GPP)

3GPP TR 25.990: "Vocabulary".

3GPP TS 05.01: "GERAN, Physical Layer on the Radio Path, General Description"

3GPP TS 05.02: "GSM/EDGE, Radio Access Network, Multiplexing and Multiple Access on the Radio Path"

Copyright 2006, OBSAI, All Rights Reserved.
Confidential & Proprietary Information

3GPP TS 05.03" "GERAN, Channel Coding"

3GPP TS 23.003: "Numbering, Addressing and Identification".

3GPP TS 23.101: "General UMTS Architecture".

3GPP TS 23.110: "UMTS Access Stratum Services and Functions".

3GPP TS 25.211: "Physical channels and mapping of transport channels onto physical channels (FDD)".

3GPP TS 25.212: "Radio Access Network, Multiplexing and Channel Coding (FDD)"

3GPP TS 25.213: "Radio Access Network, Spreading and Modulation"

3GPP TS 25.331: "RRC Protocol Specification".

3GPP TS 25.402: "Synchronisation in UTRAN, Stage 2".

3GPP TS 25.414: " UTRAN Iu Interface Data Transport & Transport Signalling".

3GPP TS 25.424: "UTRAN Iur Interface Data Transport & Transport Signaling for Common Transport Channel Data Streams".

3GPP TS 25.426: "UTRAN Iur and Iub Interface Data Transport & Transport Signaling for DCH Data Streams".

3GPP TS 25.434: "UTRAN Iub Interface Data Transport & Transport Signaling for Common Transport Channel Data Streams".

3GPP TS 23.236: "Intra-domain connection of Radio Access Network (RAN) nodes to multiple Core Network (CN) nodes".

3GPP TS 25.442: "UTRAN Implementation Specific O&M Transport".

3GPP TR 43.930: "Iur-g interface; Stage 2".

5.10 Other

"Information technology – Open Systems Interconnection – Network service definition", X.213, ISO/IEC 8348.

"Information technology – Open Systems Interconnection – Network service definition Amendment 1: Addition of the Internet protocol address format identifier", X.213/Amd.1, ISO/IEC 8348.

R.E. Blahut, Theory and Practice of Error Control codes, Addison-Wesley, Reading, 1983.

S. Lin and D.J. Costello, Jr., Error Control Coding: Fundamentals and Applications, Prentice-Hall, Englewood Cliffs, N.J., 1983.

Copyright 2006, OBSAI, All Rights Reserved.
Confidential & Proprietary Information

S. Verdu, “Optimum Sequence Detection of Asynchronous Multiple-Access Communications,” Abs. IEEE Int. Symp. Information Theory, St. Jovite, Canada, p. 80, Sept. 1983.

J.G. Proakis, Digital Communications, McGraw-Hill, New York, 1995.

[WiMAX Profiles] WiMAX Forum™ Regulatory Working Group, *Initial Certification Profiles and the European regulatory framework – September, 2004*

Copyright 2006, OBSAI, All Rights Reserved.
Confidential & Proprietary Information

Appendix A. Design Recommendations

Appendix A provides recommended minimum or essential requirements that are not controlled by performance characteristics, interface requirements, or specified referenced documents. They include appropriate design standards, requirements governing the use or selection of materials, parts and processes, interchangeability requirements, environmental conditions, electromagnetic compatibility, reliability, reparability, and safety requirements.

A.1. Environmental Conditions

A.1.1. Operating Temperature And Humidity

The BTS should not sustain any damage or deterioration of functional performance during its operating life when operated in an ambient temperature, external to the cabinet housing, of -40°C with no solar load to +52°C with maximum solar load of 720 W/m^2 and maximum power dissipation and a relative humidity of 5% to 95%. With ambient temperatures above 84°F, the relative humidity may be limited to that corresponding to a specific humidity of 0.024 pounds of water per pound of dry air.

A.1.2. Storage Temperature And Humidity

The OBSAI BTS should meet all functional criteria after being stored in ambient temperatures of -40°C to +70°C with a relative humidity of 5% to 95%. With ambient temperatures above 84°F, the relative humidity may be limited to that corresponding to a specific humidity of 0.024 pounds of water per pound of dry air.

A.1.3. Altitude Requirements

The OBSAI BTS should meet all functional criteria after being installed at altitudes from 200 feet below mean sea level to 13,000 feet above mean sea level. For high altitude operation, the temperature requirement is derated at 1°C per 1000 feet above sea level in accordance with Telcordia guidelines.

Copyright 2006, OBSAI, All Rights Reserved.
Confidential & Proprietary Information

A.2. Design and Construction Criteria

This section provides the minimum or essential requirements that are not controlled by performance characteristics, interface requirements, or specified referenced documents. They should include appropriate design standards, requirements governing the use or selection of materials, parts and processes, interchangeability requirements, environmental conditions, electromagnetic compatibility, reliability, reparability, and safety requirements.

A.2.1. Maintainability Criteria

The BTS should allow field access, such as a door, for the removal of a faulty module or CCA. Module insertion or extraction while power is on should not damage any module. Insertion or extraction of a module should not disrupt operation of the BTS.

A.2.1.1. Field Upgrades

The BTS should support the following hardware upgrades in the field.

- Insert or remove baseband modules
- Increase from 1 to TBD carriers
- Insert or remove RF modules
- Insert or remove backhaul interface(s)

A.2.1.2. Mean Time To Repair (MTTR)

Mean-time-to-repair (MTTR) should apply to replacement of a failed field replaceable unit (FRU) and should include the following operations by field personnel:

- Time for fault detection and isolation to one or more FRUs
- Disassembly of mounting fixtures (if any)
- Interchange of the failed FRU
- Reassembly of mounting fixtures
- Alignment and checkout of the replaced FRU

At the field (on-site) level, the BTS should have a MTTR of no greater than thirty minutes and a Maximum Time To Repair (MTTRMAX) no greater than sixty minutes at the 95th percentile. MTTR does not include the time required to travel to the BTS site.

A.2.1.3. Maintenance Access

Copyright 2006, OBSAI, All Rights Reserved.
Confidential & Proprietary Information

Maintenance procedures must ensure that access to the equipment during a maintenance action should not cause BTS equipment to overheat and should not allow excessive moisture and dirt intrusion.

Maintenance procedures must ensure that access to the equipment during a maintenance action should not cause OBSAI BTS modules to overheat and should not allow excessive moisture and dirt intrusion.

A.2.2. Safety and Fail-safe Operation

The BTS and the internal modules should comply with the requirements of Underwriters Laboratory (UL), 60950, 3rd Edition.

Copyright 2006, OBSAI, All Rights Reserved.
Confidential & Proprietary Information

Appendix B. Specification for HARD-Metric Vertical Male Connector

B.1. Scope

Specification for:	Hard metric 2mm, straight male, 144 pin. electrical connector with or without guide and coding block and with or without endwall.
Other parts:	Guide and coding pin.

B.2. General Description

Type:	Data
Connection method:	Press-fit (PCB thickness ≥ 1,4 mm)
Shape:	Straight male
Number of poles:	6 x 24

Male connector will be loaded with hm 2mm standard pins acc. to IEC 61076-4-101. Pin type(s) used for this connector are described in chapter 9.4.

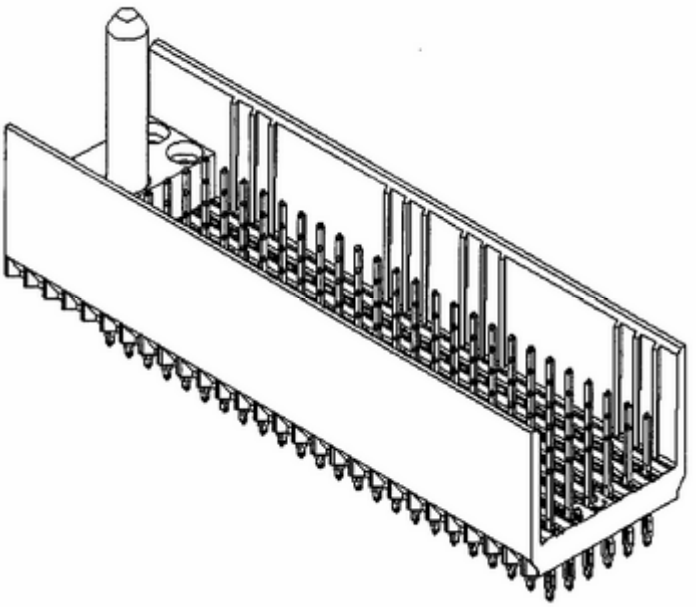

Figure B-1 2mm Straight Male Connector 144 Pin with Guide and Coding Block

Copyright 2006, OBSAI, All Rights Reserved.
Confidential & Proprietary Information

B.3. Electrical Specification

Operational temperature range:	45…+85 °C
Signaling rate:	DC ... 1.536 Gbps
Max. Voltage (U):	< 60 VDC
Creepage distance:	> 0,8 mm
Clearance distance:	> 0,8 mm
Max. Current (I):	0,6 A at max. +35°C temperature rise
Contact resistance (Ohm):	Row a < 0,015 O on mated pair Row f < 0,035 O on mated pair
Insulation resistance:	> 1000 MO
Voltage proof:	750 V (RMS)

Copyright 2006, OBSAI, All Rights Reserved.
Confidential & Proprietary Information

T-Mobile Ex. 1009

B.4. Mechanical Specification

All mechanical dimensions are described in drawings in chapter 9.

Allowed misalignment:	= ±1,35 mm with guide

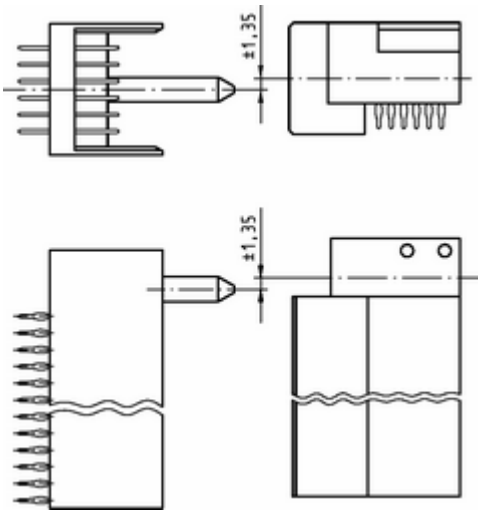

Contact range / wipe:	According to IEC 61076-4-101
Basic material of the body:	PC, PCT, PBT or similar. No high temp material required. Connector plastics shall be UL listed with V0.
Contact material:	Phosphor Bronze
Press-fit pin plating:	Tin lead (0,5 ... 3 µm) over nickel (min. 2,0 µm) and press-in zone acc. to IEC 60352-5 (01/02) . ROHS compatible pins are required in the future.
Weight (g):	< 30 g 144 pin
Durability:	≥ 250 mating cycles (IEC 61076-4-101, performance level 2)

B.5. Environmental Requirement

Following values are list of conditions where connector will be used. Connector manufacturer does not have to test connector according

Copyright 2006, OBSAI, All Rights Reserved.
Confidential & Proprietary Information

these conditions. However this information must be taken account in connector design.

These requirements come from system requirements and might be extended by a connector environmental test specification in a separate document.

B.5.1. Environment Specification For Operation

Climatic conditions:

Temperature range	-45…+85°C
Relative humidity range	5…100% (ETS 300 019-1-4:1992, class 4.1)
Absolute humidity range	0,26…29g/m
Rate of temperature change	0,5°C/min
Air pressure range	70…106 kPa (ETS 300019-1-1:1991)

Mechanical conditions:

Sinusoidal vibration:

Displacement	3,5mm peak between 5…9Hz
Acceleration	2m/s (~0,2g)
Frequency range	62…500Hz
Sweeps	5 sweep cycles for 3 direction increasing frequency (1dB/octave, logarithmic)

Shocks:

Shock spectrum	Half Sine
Duration	11ms
Acceleration	100m/s2 (10 g)
Number	3 (may be extended for ~10 shocks)
Direction	6 axis (+X, +Y, +Z, -X, -Y,-Z) (total 6 x 3)

Bump shocks:

Acceleration amplitude	400m/s (40g)
Pulse duration	6ms / pulse

Copyright 2006, OBSAI, All Rights Reserved.
Confidential & Proprietary Information

Number	500 bumps in each of 6 directions

Copyright 2006, OBSAI, All Rights Reserved.
Confidential & Proprietary Information

Random:

ASD (14)	0,96m2/s3 or – 3dB/oct
Direction	3 (X, Y, Z)
Frequency	5 – 20 – 800Hz
Duration	3 * 10 min

Earthquake:

Earthquake (zone 4 tests) GR-63-CORE	

B.5.2. Environment Specification For Transportation

Climatic and mechanical conditions for units, modules and components:

ETS 300 019-1-2: 1994 (testing methods) class 2.3.

ETS 300 019-1-2: 1992 (requirements) class 2.3.

B.6. Coding

Four types of coding are in use.

B.6.1. Coding 0

The connector does not contain any code pins.

B.6.2. Coding 1

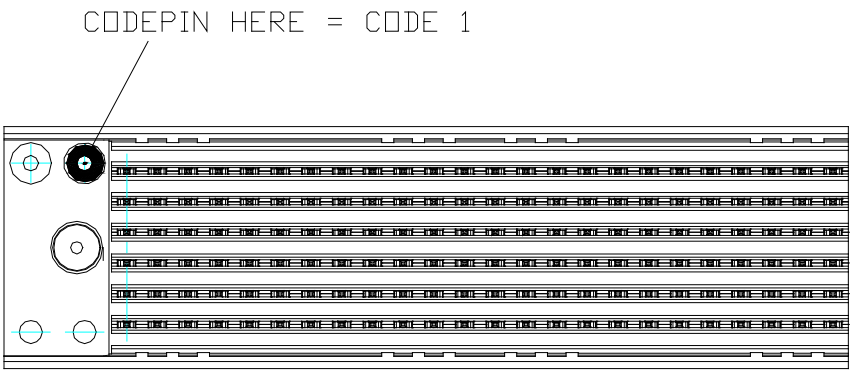

Figure B-2. Male Connector With Guidance And Coding 1

Copyright 2006, OBSAI, All Rights Reserved.
Confidential & Proprietary Information

B.6.3. Coding 2

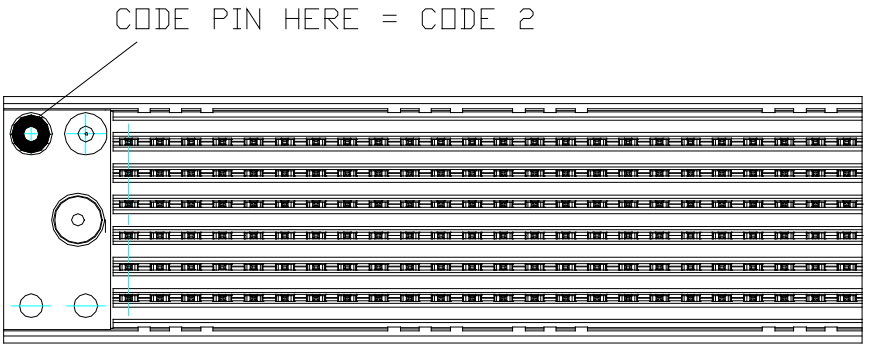

Figure B-3. Male Connector With Guidance And Coding 2

B.6.4. Coding 3

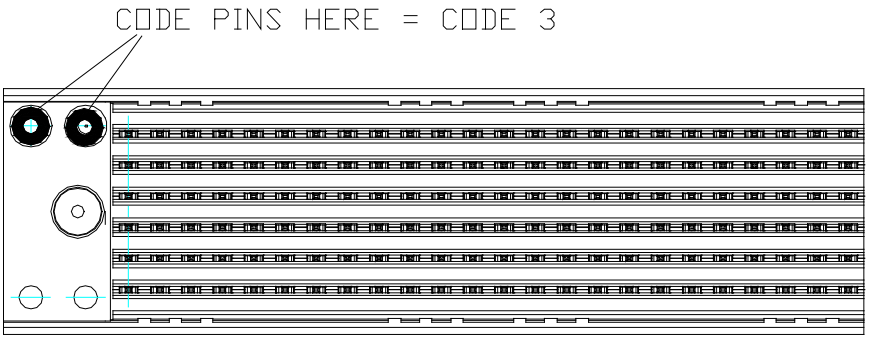

Figure B-4. Male Connector With Guidance And Coding 3

Copyright 2006, OBSAI, All Rights Reserved.
Confidential & Proprietary Information

B.7. PCB Layout

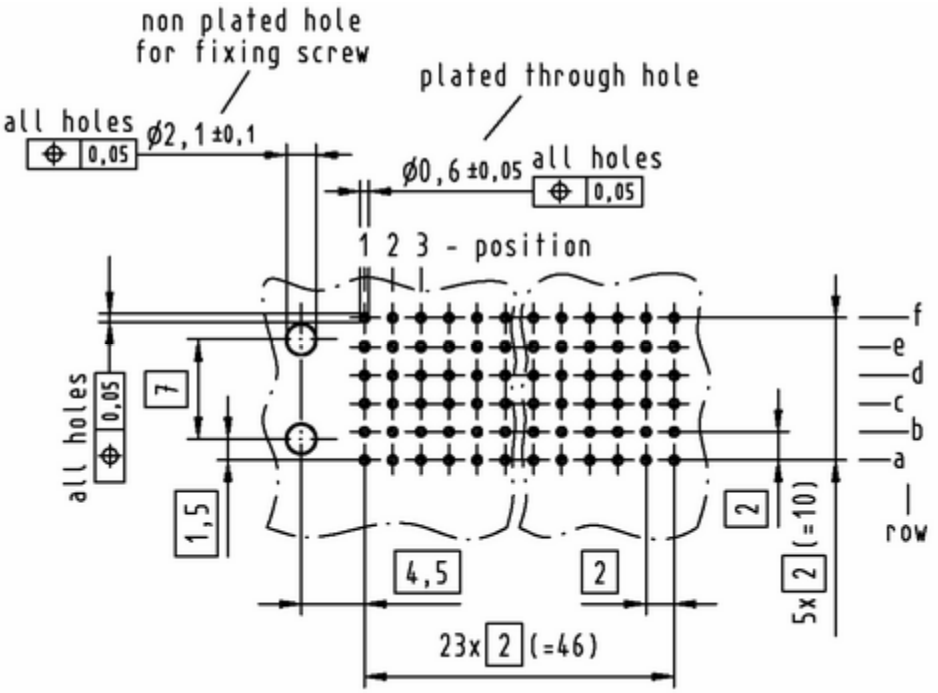

Figure B-5. Lay Out Drawing For 144 Pin Male Press-Fit Connector With Guidance

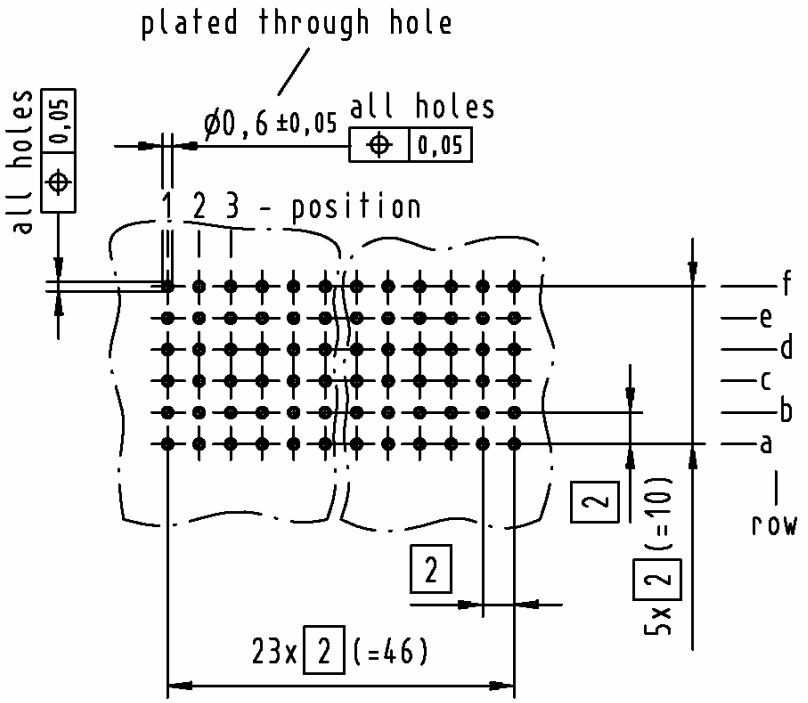

Figure B-6. Layout Drawing For 144 Pin Male Press-Fit Connector Without

Copyright 2006, OBSAI, All Rights Reserved.
Confidential & Proprietary Information

Guidance

B.8. Specification Drawings

B.8.1. Male Connector

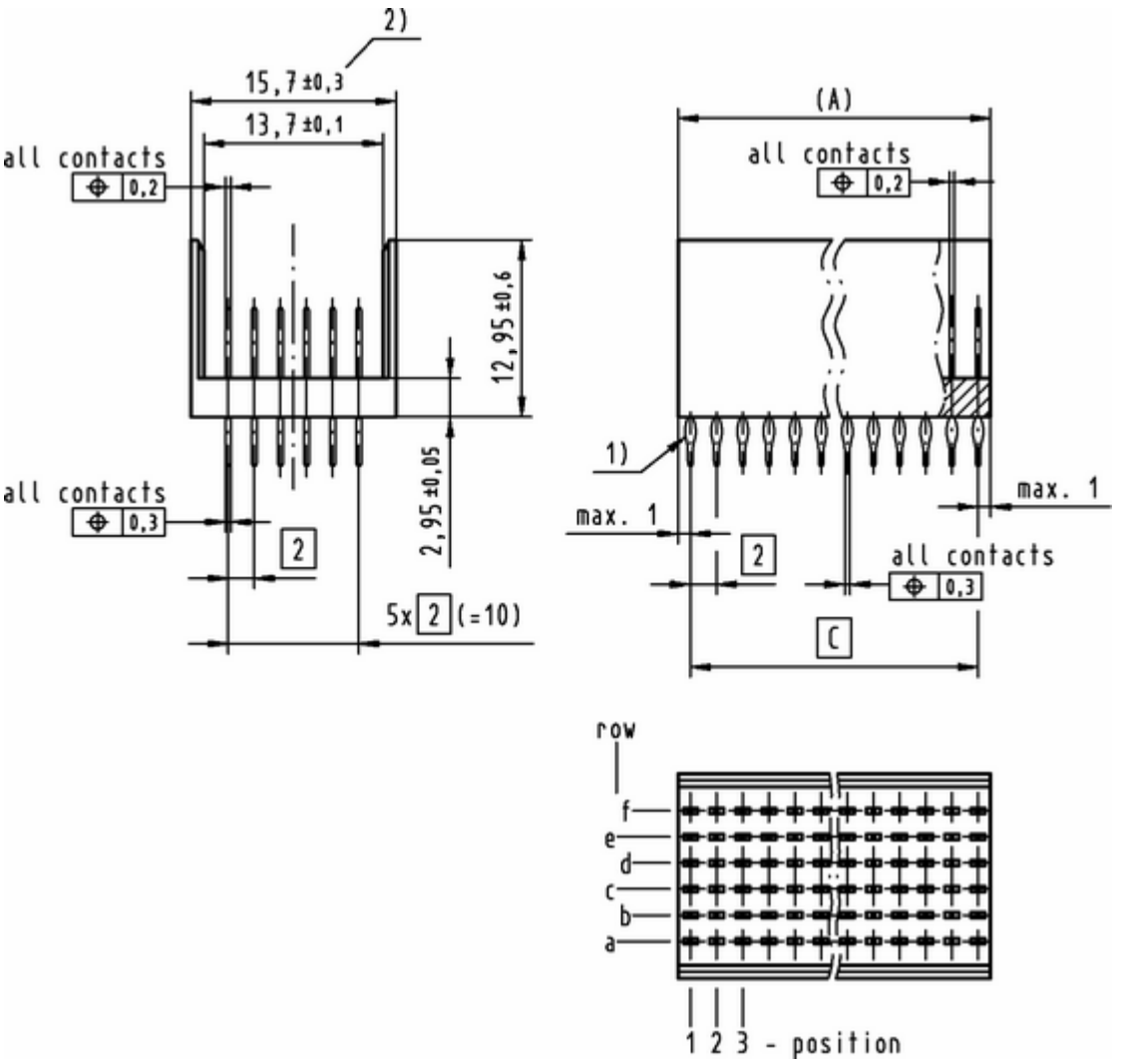

Figure B-7. Male Connector

1) Press-fit section acc. to IEC 60352-5

2) Dimension for slot distance 15,24 mm : 14,9 ± 0,1

A (mm)	C (mm)
max 48	23 x 2 = 46

Copyright 2006, OBSAI, All Rights Reserved.
Confidential & Proprietary Information

Copyright 2006, OBSAI, All Rights Reserved.
Confidential & Proprietary Information

B.8.2. Male Connector With Endwall

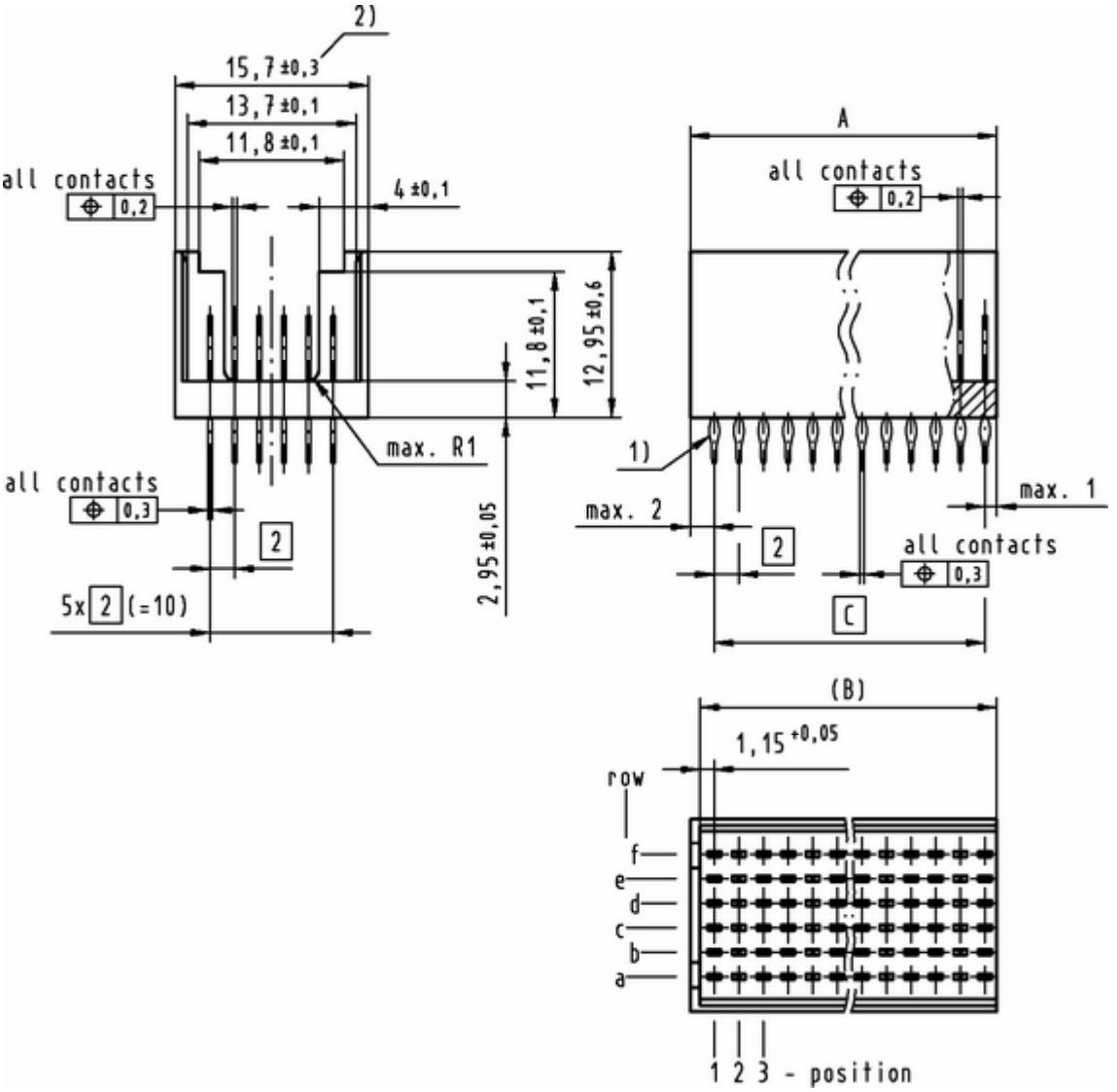

Figure B-8. Male Connector With Endwall

1) Press-fit section acc. to IEC 60352-5

2) Dimension for slot distance 15,24 mm : 14,9 ± 0,1

A (mm)	B (mm)	C (mm)
max 49	48	23 x 2 = 46

Copyright 2006, OBSAI, All Rights Reserved.
Confidential & Proprietary Information

B.9. Male Connector With Guidance

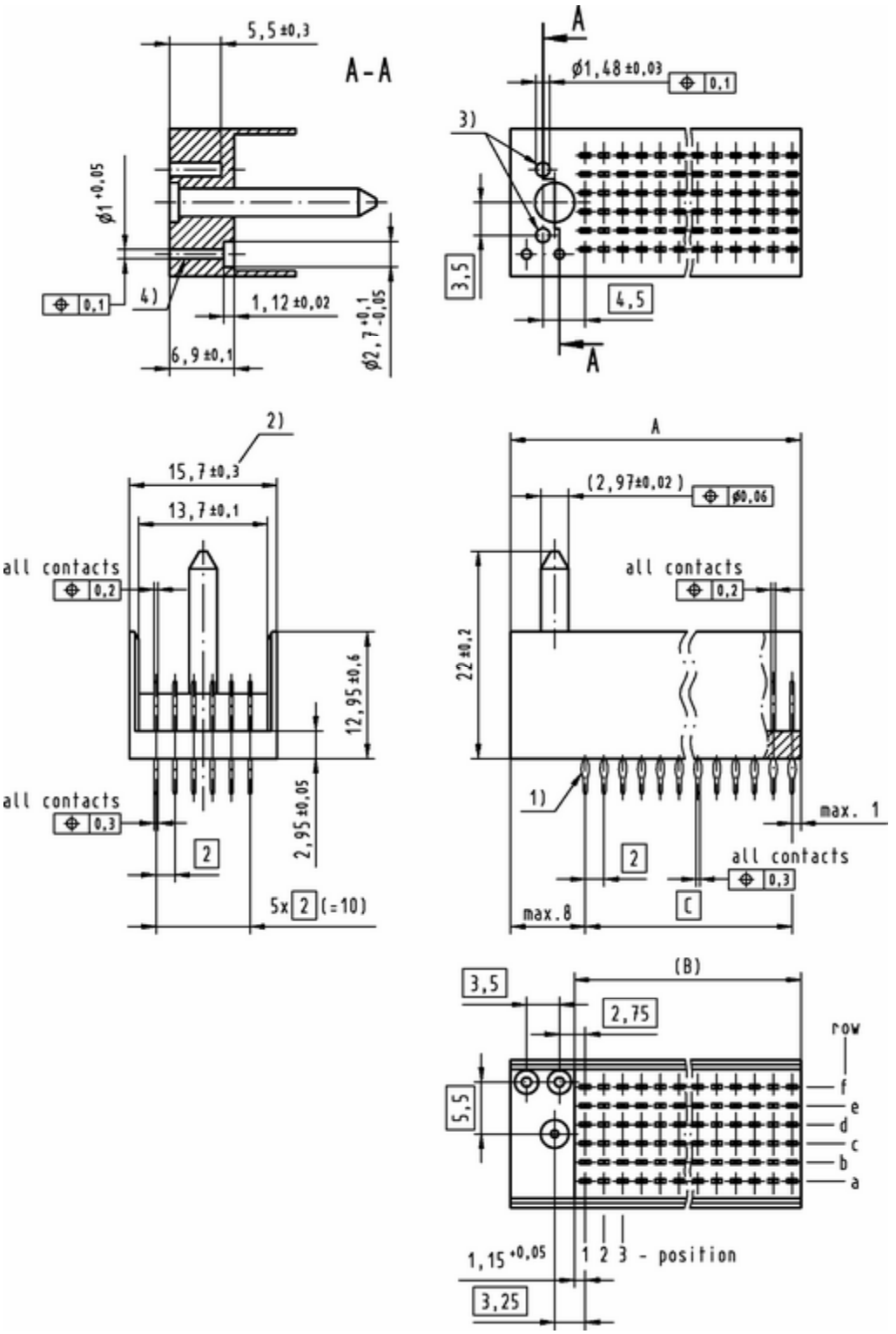

Figure C-9. Male Connector With Guidance

Copyright 2006, OBSAI, All Rights Reserved.
Confidential & Proprietary Information

1) Press-fit section acc. to IEC 60352-5

2) Dimension for slot distance 15,24 mm : 14,9 ± 0,1

3) Hole for fixing screw

4) Hole for coding pin

A (mm)	B (mm)	C (mm)
max 55	48	23 x 2 = 46

B.9.1. Available Pin Type(s)/Length(s)

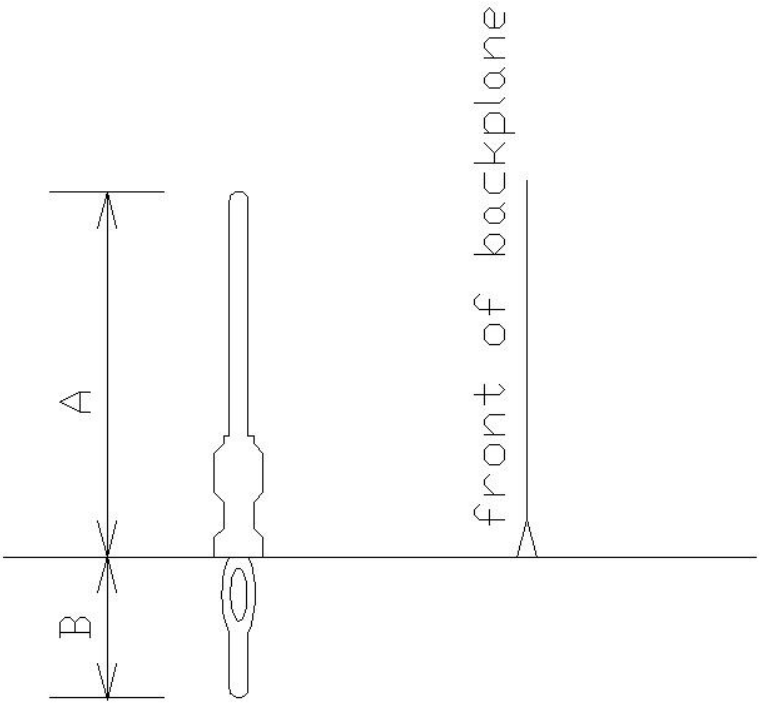

Figure B-10. Available Pin Length(S)

A (mm)	B (mm)
9,7 ± 0,2	3,7 ± 0,2

Copyright 2006, OBSAI, All Rights Reserved.
Confidential & Proprietary Information

B.9.2. Coding Pin

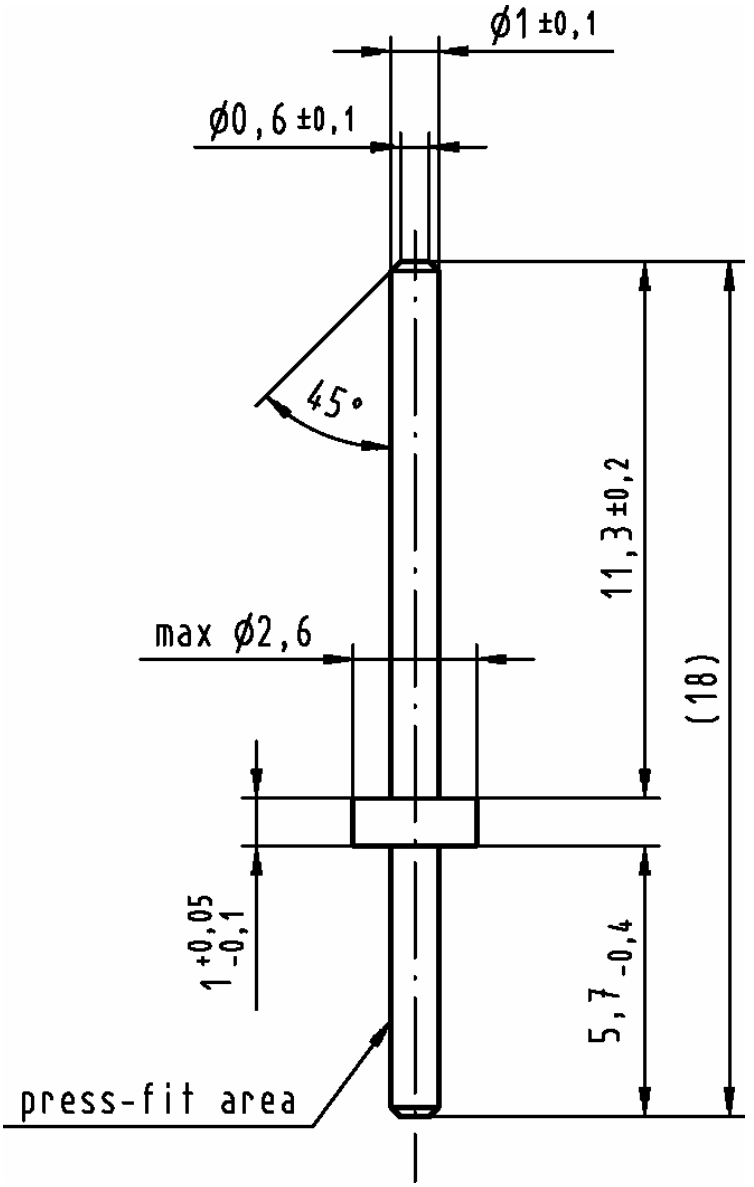

Figure B-11. Coding Pin

Required tensile strength for Coding pin material : Rm ≥ 450N/mm²

Copyright 2006, OBSAI, All Rights Reserved.
Confidential & Proprietary Information

B.9.3. Guide Pin

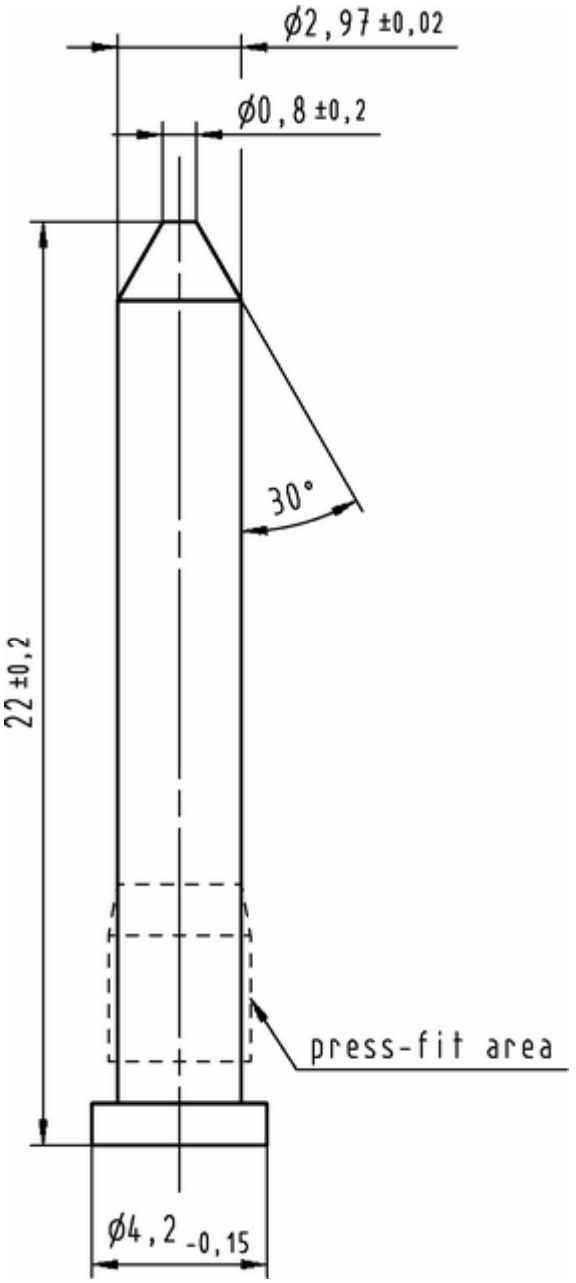

Figure B-12. Guide Pin

Required tensile strength for Guide pin material: Rm ≥ 450N/mm²

Copyright 2006, OBSAI, All Rights Reserved.
Confidential & Proprietary Information

B.10. Reference Documents

MIL- STD- 883, method 2003,3

ETS 300 019-1-4:1992, class 4.1

ETS 300019-1-1:1991

ETS 300 019-1-2

IEC 512-3, 5b

ISO 9001

Earthquake (zone 4 tests) GR-63-CORE

IEC 61076-4-101

IEC 60352-5 (01/02)

Copyright 2006, OBSAI, All Rights Reserved.
Confidential & Proprietary Information

Appendix C. Hard-Metric 2MM 6-Row Daughterboard Receptacle

C.1. Summary of changes

Version	Approved by	Date
0.0.1	Document started	Sep. 05, 2003
0.02	TWG	Mar. 10, 2004

Copyright 2006, OBSAI, All Rights Reserved.
Confidential & Proprietary Information

C.2. Scope

Specification for	Hard metric 2mm female right angle receptacle, 144 pins electrical connector. With or without guide and coding block.

C.3. General Description

Type:	Data
Connection method:	Pin in hole reflow (PCB thickness min 1,45mm, max. 2,15mm) or pressfit (PCB thickness 1,4 – 2,4mm)
Shape:	Right angle female
Number of poles:	6 x 24

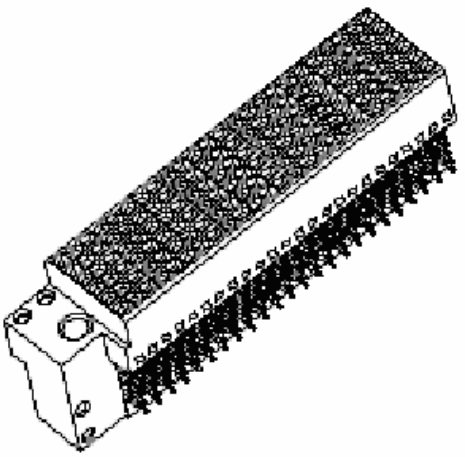

Figure C-1. 2mm Right Angle Female, 144pin Version With Guide And Coding Block

Copyright 2006, OBSAI, All Rights Reserved.
Confidential & Proprietary Information

C.4. Electrical Specification

Operational temperature range:	45…+85 °C
Signaling rate:	DC ... 1.536 Gbps
Max. Voltage (U):	< 60 VDC
Creepage distance:	> 0,6 mm
Clearance distance:	> 0,6 mm
Max. Current (I):	0,6 A at max. +35°C temperature rise
Contact resistance (Ohm):	Row a < 0,015 O on mated pair Row f < 0,035 O on mated pair
Insulation resistance:	> 1000 MO
Voltage proof:	750 V (RMS)

C.5. Mechanical Specification

All mechanical dimensions are described in drawings in chapter 9.

Allowed misalignment:	= ±1,35 mm with guide

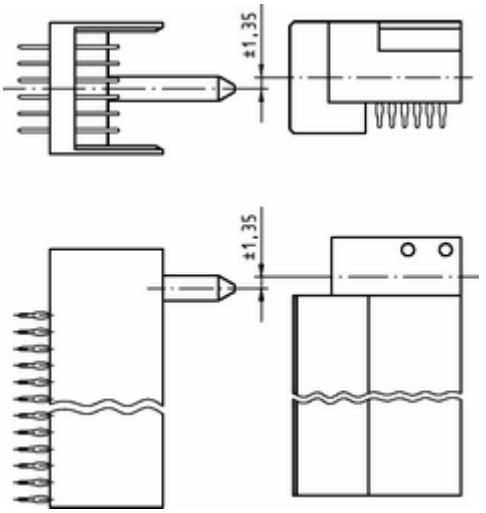

Contact range / wipe:	According to IEC 61076-4-101
Basic material of the	PIHR connector housing material must be

Copyright 2006, OBSAI, All Rights Reserved.
Confidential & Proprietary Information

body:	suitable for lead free reflow process. On pressfit connectors no high temperature material is required. Connector plastics shall be UL listed with V0.
Contact material:	Phosphor Bronze
Press-fit pin plating:	Tin lead (0,5 ... 3 µm) over nickel (min. 2,0 µm) and press-in zone acc. to IEC 60352-5 (01/02) . ROHS compatible pins are required in the future.
Weight (g):	< 30 g 144 pin
Durability:	≥ 250 mating cycles (IEC 61076-4-101, performance level 2)
Solderability	PIHR connector must be suitable for lead free reflow process

C.6. Environmental Requirement

Following values are list of conditions where connector will be used. Connector manufacturer does not have to test connector according these conditions. However this information must be taken account in connector design.

These requirements come from system requirements and might be extended by a connector environmental test specification in a separate document.

Copyright 2006, OBSAI, All Rights Reserved.
Confidential & Proprietary Information

C.6.1. Environment specification for operation

Climatic conditions:

Temperature range	-45…+85°C
Relative humidity range	5…100% (ETS 300 019-1-4:1992, class 4.1)
Absolute humidity range	0,26…29g/m
Rate of temperature change	0,5°C/min
Air pressure range	70…106 kPa (ETS 300019-1-1:1991)

Mechanical conditions:

Sinusoidal vibration:

Displacement	3,5mm peak between 5…9Hz
Acceleration	2m/s (~0,2g)
Frequency range	62…500Hz
Sweeps	5 sweep cycles for 3 direction increasing frequency (1dB/octave, logarithmic)

Shocks:

Shock spectrum	Half Sine
Duration	11ms
Acceleration	100m/s2 (10 g)
Number	3 (may be extended for ~10 shocks)
Direction	6 axis (+X, +Y, +Z, -X, -Y,-Z) (total 6 x 3)

Bump shocks:

Acceleration amplitude	400m/s (40g)
Pulse duration	6ms / pulse
Number	500 bumps in each of 6 directions

Random:

ASD (14)	0,96m2/s3 or – 3dB/oct
Direction	3 (X, Y, Z)

Copyright 2006, OBSAI, All Rights Reserved.
Confidential & Proprietary Information

Frequency	5 – 20 – 800Hz
Duration	3 * 10 min

Copyright 2006, OBSAI, All Rights Reserved.
Confidential & Proprietary Information

Earthquake:

Earthquake (zone 4 tests) GR-63-CORE	

C.6.2. Environment Specification For Transportation

Climatic and mechanical conditions for units, modules and components:

ETS 300 019-1-2: 1994 (testing methods) class 2.3.

ETS 300 019-1-2: 1992 (requirements) class 2.3.

C.7. Coding

Four types of coding are in use.

C.7.1. Coding 0

There are no coding holes in the guide and coding block of the connector.

C.7.2. Coding 1

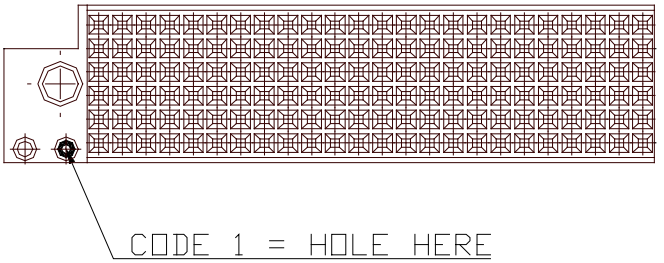

Figure C-2. Female Connector With Guidance And Coding 1

C.7.3. Coding 2

Copyright 2006, OBSAI, All Rights Reserved.
Confidential & Proprietary Information

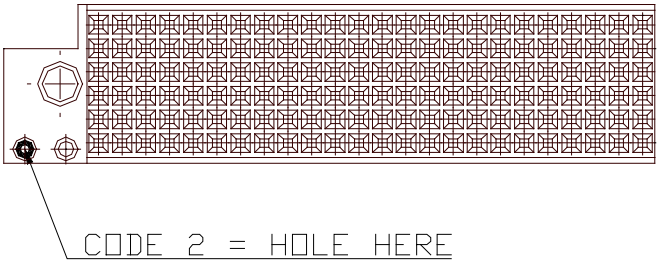

Figure C-3. Female Connector With Guidance And Coding 2

C.7.4. Coding 3

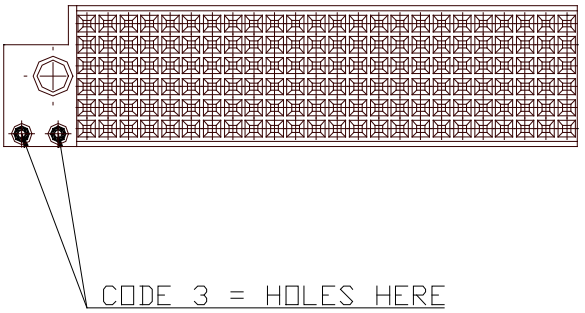

Figure C-4. Female Connector With Guidance And Coding 3

C.8. PCB Layout

Copyright 2006, OBSAI, All Rights Reserved.
Confidential & Proprietary Information

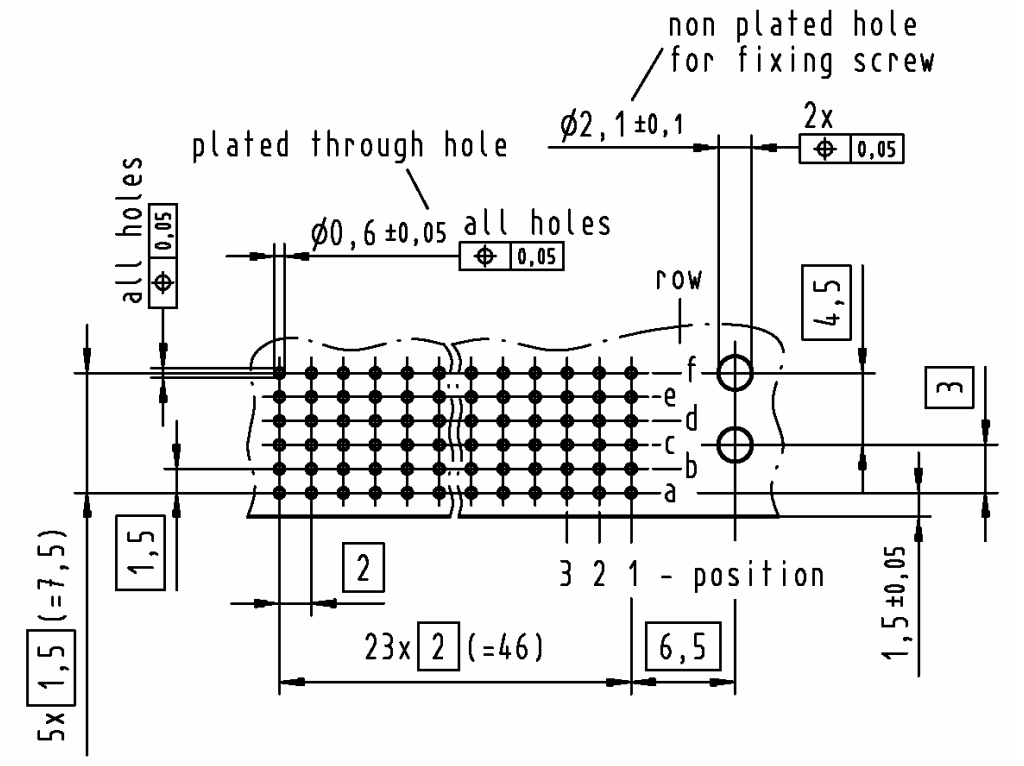

Figure C-5. Board Layout For 144 Pin Female Press-Fit Connector With Guidance

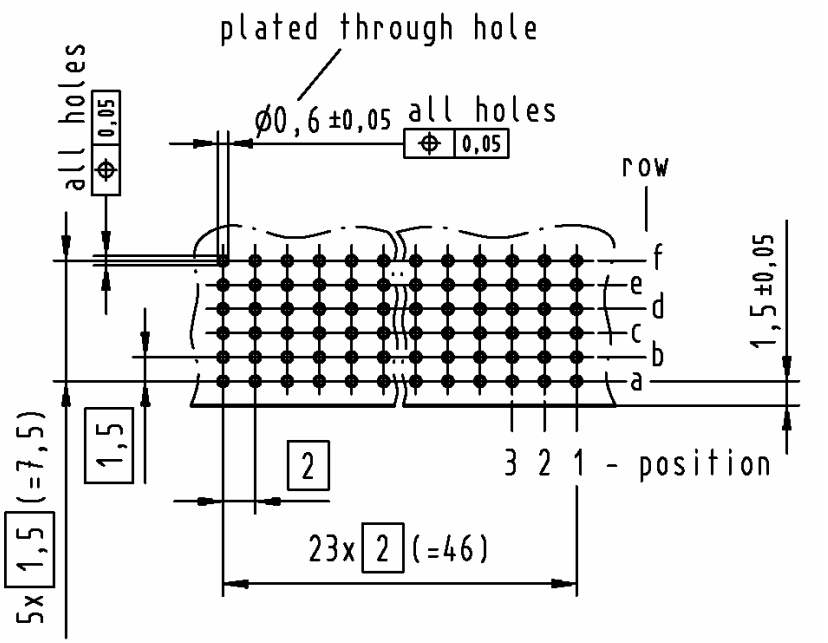

Figure C-6. Board Layout For 144 Pin Female Press-Fit Connector Without Guidance

Copyright 2006, OBSAI, All Rights Reserved.
Confidential & Proprietary Information

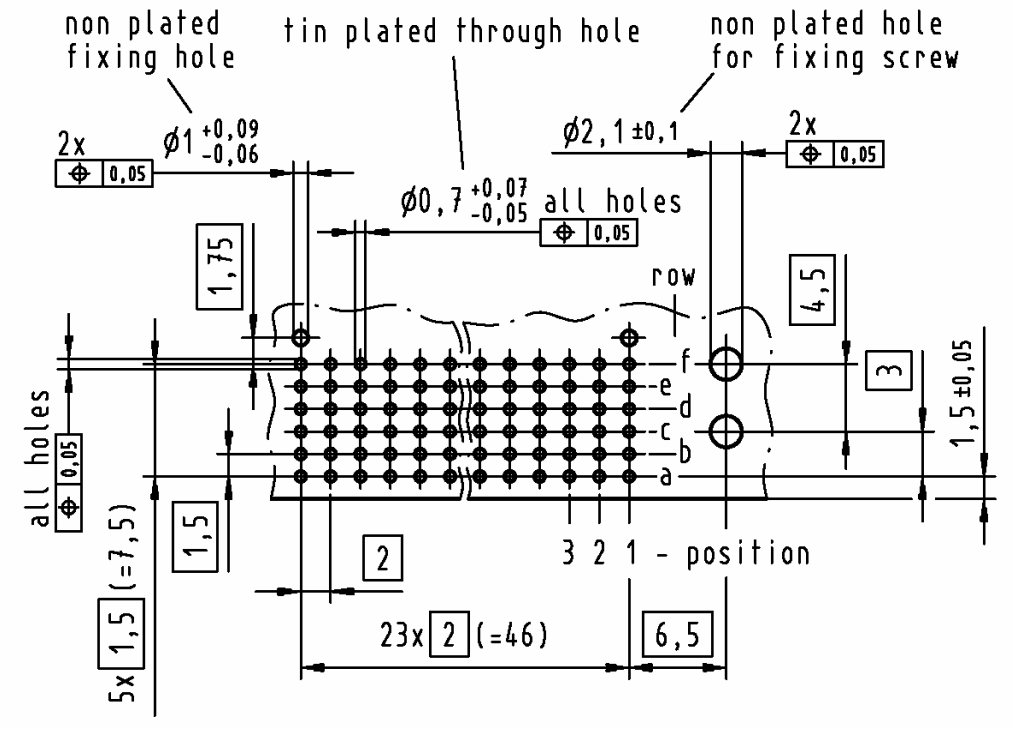

Figure C-7. Layout Drawing For 144 Pin Female PIHR Connector With Guidance

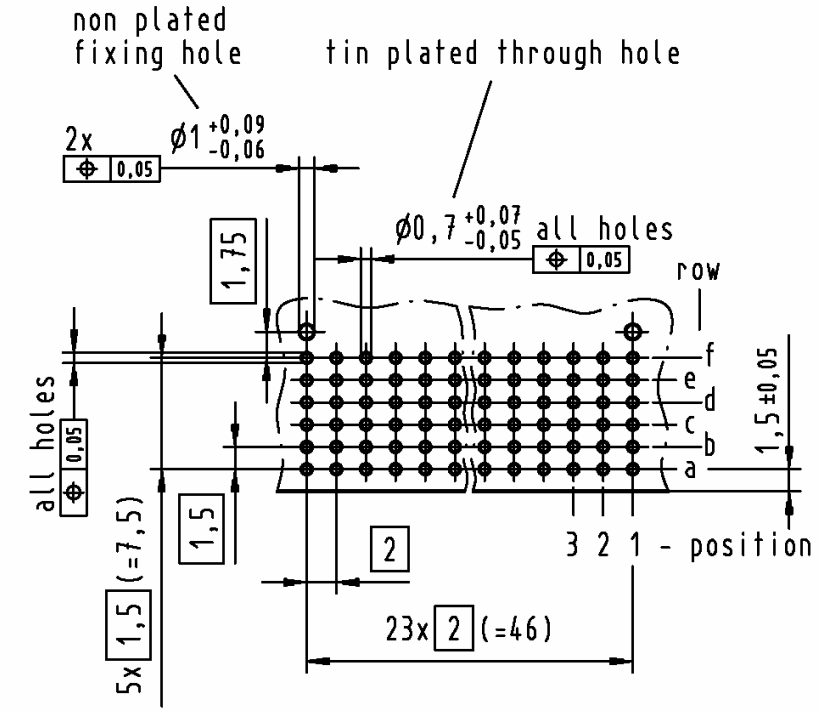

Figure C-8. Board Layout For 144 Pin Female PIHR Connector Without Guidance

Copyright 2006, OBSAI, All Rights Reserved.
Confidential & Proprietary Information

C.9. Specification Drawings

C.9.1. Female PIHR Connector

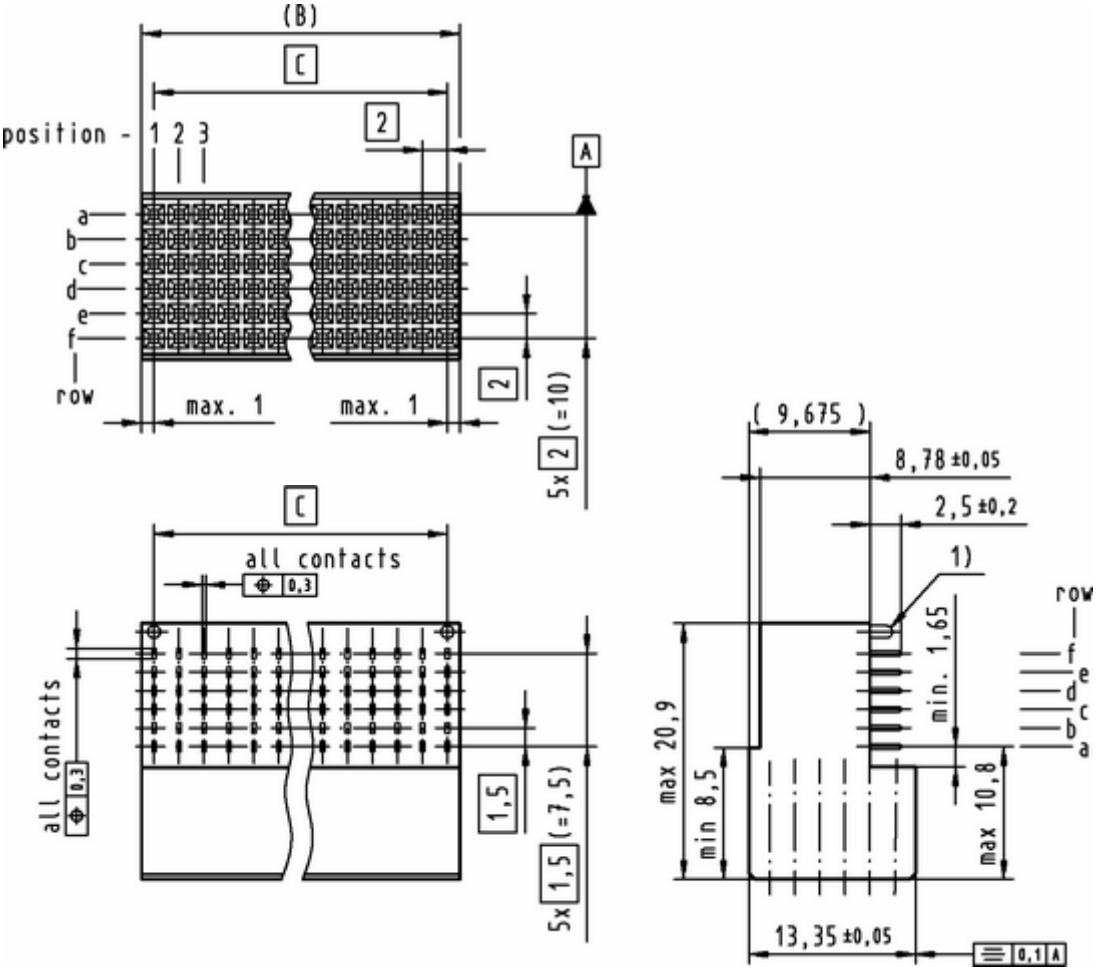

Figure C-9. Female PIHR Connector Without Guidance

1) Forces for locking-pin (if used): insertion force: max 8N; retention force: min 0,5N

Remark: A locking mechanism is necessary to hold the connector in its position for reflow soldering. Whether this mechanism is a plastic peg as shown or something else is not relevant.

Copyright 2006, OBSAI, All Rights Reserved.
Confidential & Proprietary Information

Connector Type	B (mm)	C (mm)
144 pin	max 48	23 x 2 = 46

C.9.2. Female PIHR Connector With Guidance

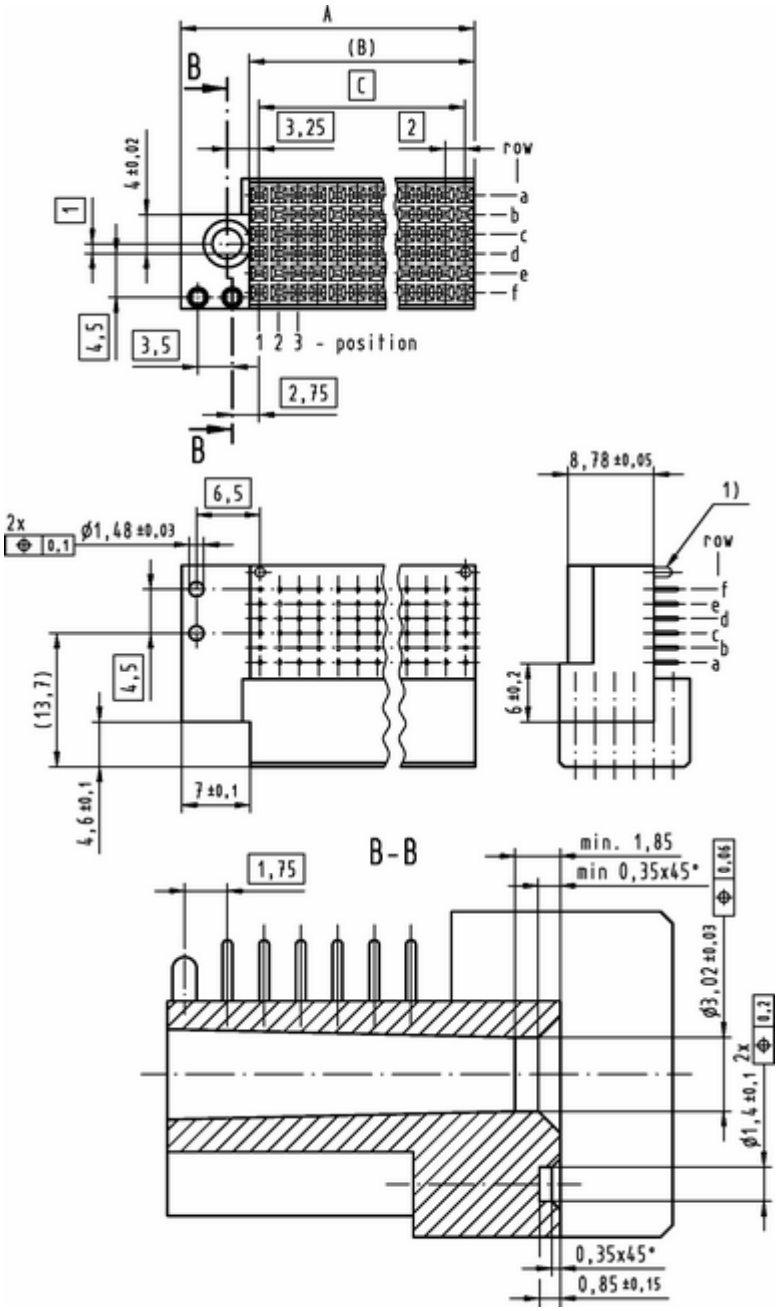

Figure C-10. Female PIHR Connector With Guidance

Copyright 2006, OBSAI, All Rights Reserved.
Confidential & Proprietary Information

1) Forces for locking-pin (if used): insertion force: max 8N; retention force: min 0,5N

Connector Type	A (mm)	B (mm)	C (mm)
144 pin with guidance	max 55	max 48	23 x 2 = 46

C.9.3. Female Press-fit Connector

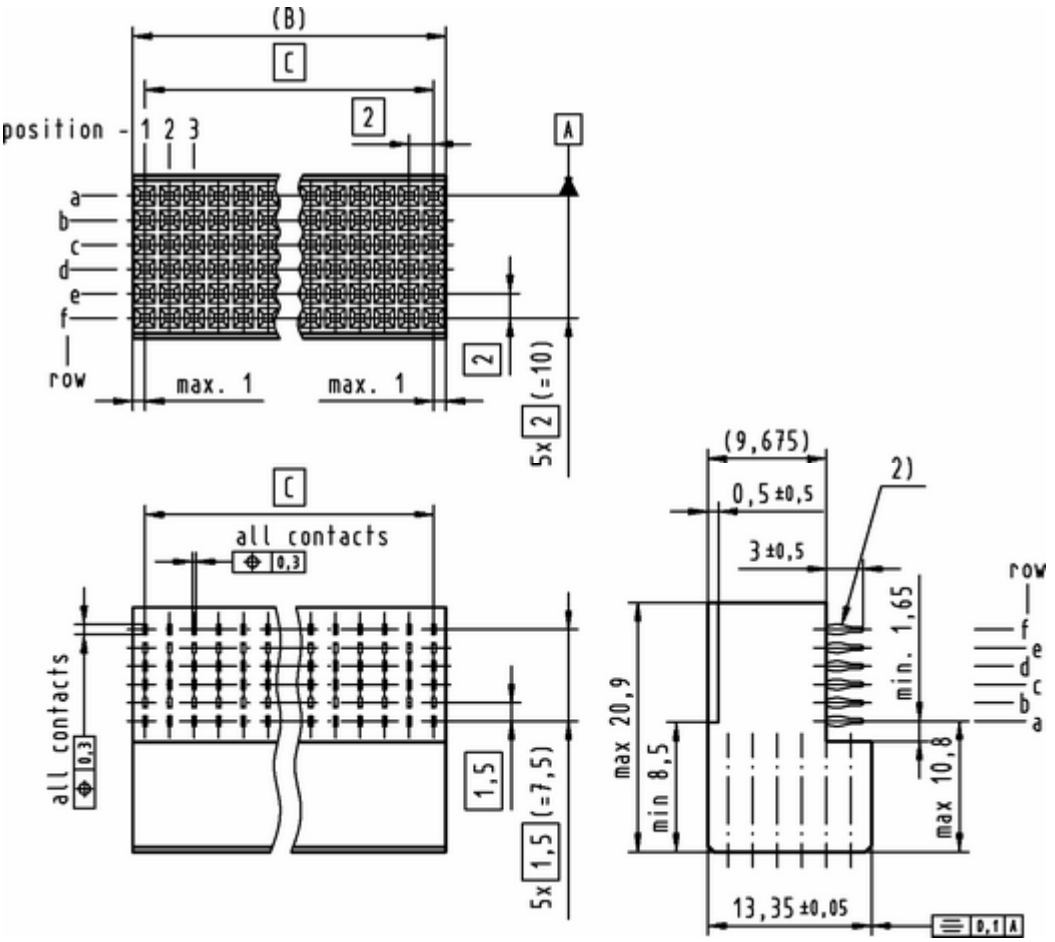

Figure C-11. Female Press-Fit Connector Without Guidance

2) Press-fit section acc. to IEC 60352-5

Connector Type	B (mm)	C (mm)
144 pin	max 48	23 x 2 = 46

Copyright 2006, OBSAI, All Rights Reserved.
Confidential & Proprietary Information

C.9.4. Female Press-Fit Connector With Guidance

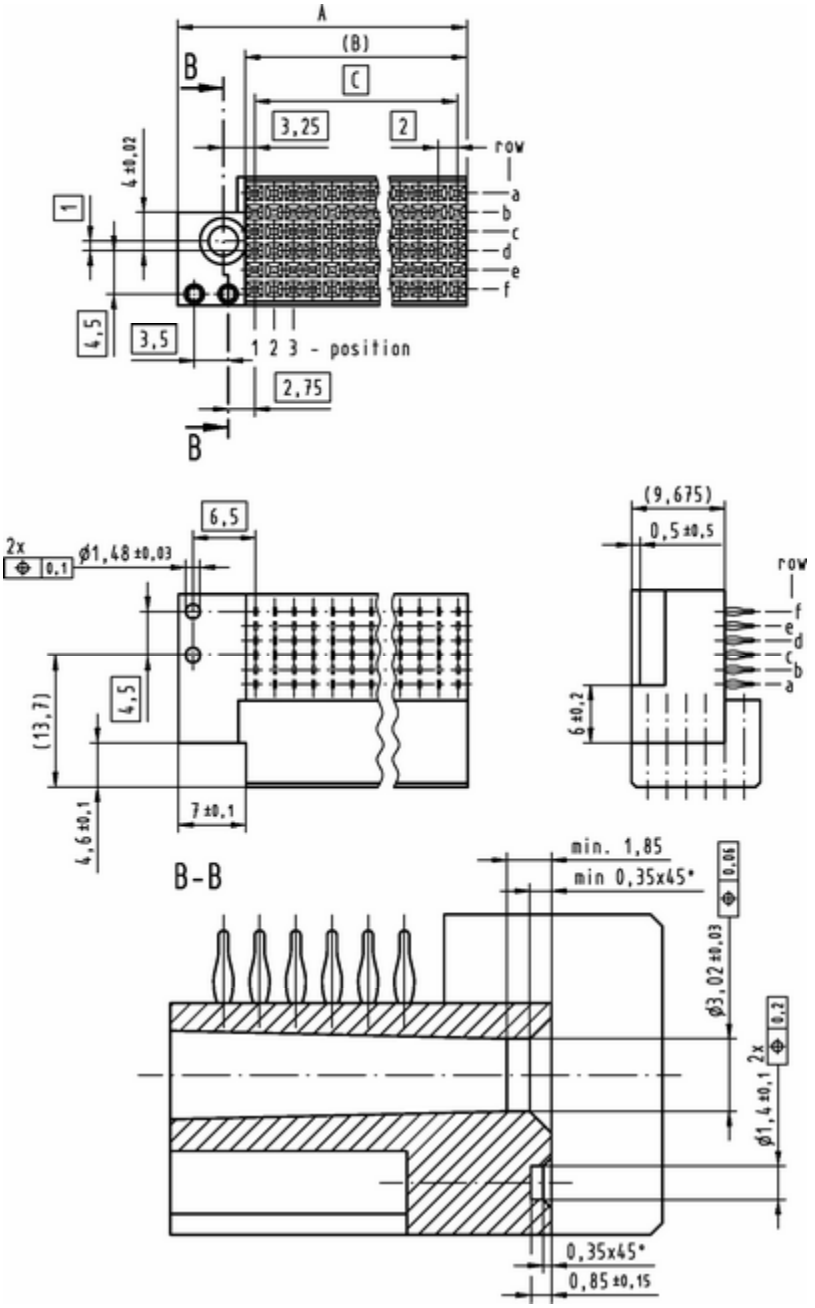

Figure C-12. Female Press-Fit Connector With Guidance

2) Press-fit section acc. to IEC 60352-5

Connector Type	A (mm)	B (mm)	C (mm)
144 pin with guidance	max 55	max 48	23 x 2 = 46

Copyright 2006, OBSAI, All Rights Reserved.
Confidential & Proprietary Information

C.10. Reference Documents

MIL- STD- 883, method 2003,3

ETS 300 019-1-4:1992, class 4.1

ETS 300019-1-1:1991

ETS 300 019-1-2

IEC 512-3, 5b

ISO 9001

Earthquake (zone 4 tests) GR-63-CORE

IEC 61076-4-101

IEC 60352-5 (01/02)

Copyright 2006, OBSAI, All Rights Reserved.
Confidential & Proprietary Information

T-Mobile Ex. 1009

Appendix D. HARD-Metric Right Angled Male Power Connector Specification

D.1. Summary of changes

Version	Approved by	Date
0.01		Jan.29, 2004
0.02		Feb.04, 2004
0.03		Mar.03, 2004
0.04		Mar.09, 2004

D.2. Scope

Specification for Hard metric, right angled male.

4 pin electrical power connector.

Copyright 2006, OBSAI, All Rights Reserved.
Confidential & Proprietary Information

D.3. General Description

- Type: Power
- Connection method: Pin in hole reflow or press-fit (PCB thickness min 1,45 mm x , max. 2,15mm)
- Shape: Right angled male.
- Number of poles: 4

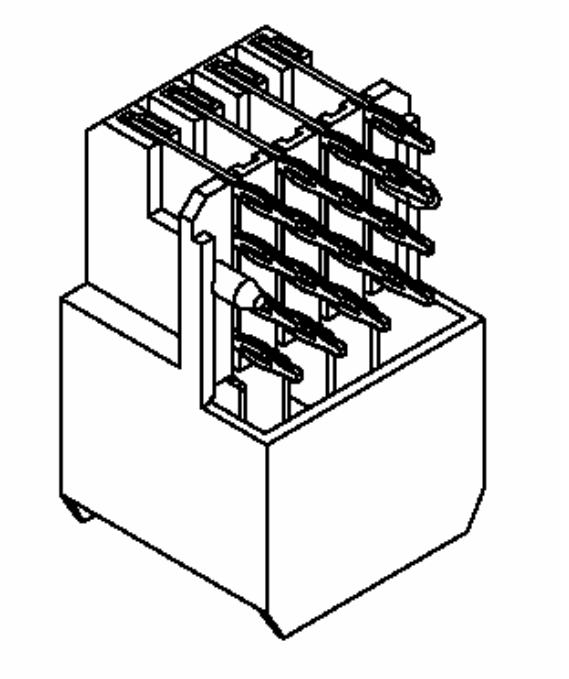

Figure D-1 Right Angle Male, 4-Pin

D.4. Electrical Specification

- Operational temperature range: -45…+85 °C
- Max. Voltage (U): < 60 VDC
- Creepage distance: > 1,2 mm
- Clearance distance: > 1,0 mm
- Maximum current (I): 23A at 80% derating and 70°C environmental temperature According to IEC 60512-3 test 5b, with two pins loaded.
- Contact resistance (Ohm): < 0,003 O on mated pair
- Insulation resistance > 1000 M O

Copyright 2006, OBSAI, All Rights Reserved.
Confidential & Proprietary Information

- Voltage proof: 1500 V (RMS)

D.5. Mechanical Specification

- All mechanical dimensions are described in drawings in Section E.9.
- Allowed misalignment: = ±1,0 mm
- Contact range / wipe: According to IEC 61076-4-101
- Basic material of the body: PIHR connector housing material must be suitable for lead free reflow process. On pressfit connectors no high temperature material is required. Connector plastics shall be UL listed with V0
- Contact Copper alloy
- Solder pin (PIHR): acc. to IEC 60068-2-58
- Press-fit pin: press-in zone acc. to IEC 60352-5 (01/02) .
- Weight (g): < 10g
- Durability: ≥ 250 mating cycles (IEC 61076-4-101, performance level 2)
- Solderability PIHR connector must be suitable for lead free reflow process

PIHR connector must have min 0,5mm stand off to PCB surface. Connector must be compatible with ROHS requirements.

D.6. Environmental Requirement

Following values are a list of conditions where the connector will be used. Connector manufacturer does not have to test the connector according to these conditions. However this information must be taken into account in connector design.

These requirements come from system requirements and might be extended by a connector environmental test specification in a separate document.

D.6.1. Environment Specification For Operation

Climatic conditions:

- Temperature range -45…+85°C.
- Relative humidity range 5…100% (ETS 300 019-1-4:1992, class 4.1).

Copyright 2006, OBSAI, All Rights Reserved.
Confidential & Proprietary Information

- Absolute humidity range 0,26…29g/m^3.
- Rate of temperature change 0,5°C/min.
- Air pressure range 70…106 kPa (ETS 300019-1-1:1991).

Copyright 2006, OBSAI, All Rights Reserved.
Confidential & Proprietary Information

Mechanical conditions:

1. Sinusoidal vibration:

• Displacement	3,5mm peak between 5…9 Hz
• Acceleration	2m/s^2 (~0.2g)
• Frequency range	62…500 Hz
• Sweeps	5 sweep cycles for 3 direction increasing frequency (1dB/octave, logarithmic)

2. Shocks:

Shock spectrum	Half Sine
Duration	11ms
Acceleration	100 m/s2 (10 g)
• Number	3 (may be extended for ~10 shocks)
• Direction	6 axis (+X, +Y, +Z, -X,-Y, -Z) (total 6 x 3)

3. Bump shocks:

• Acceleration amplitude	400 m/s^2 (40 g)
• Pulse duration	6 ms/ pulse
• Number directions.	500 bumps in each of 6

4. Random:

• ASD (14)	0,96 m^2/s^3 or – 3 dB/oct
• Direction	3 (X, Y, Z)
• Frequency	5 – 20 – 800 Hz.
• Duration	3 * 10 min

5. Earthquake:

- Earthquake (zone 4 tests) GR-63-CORE

D.6.2. Environment Specification For Transportation

Climatic and mechanical conditions for units, modules and components:

- ETS 300 019-1-2: 1994 (testing methods) class 2.3.
- ETS 300 019-1-2: 1992 (requirements) class 2.3.

Copyright 2006, OBSAI, All Rights Reserved.
Confidential & Proprietary Information

D.7. Pin Types and Contact Loading

D.7.1. Pin Types

Type -

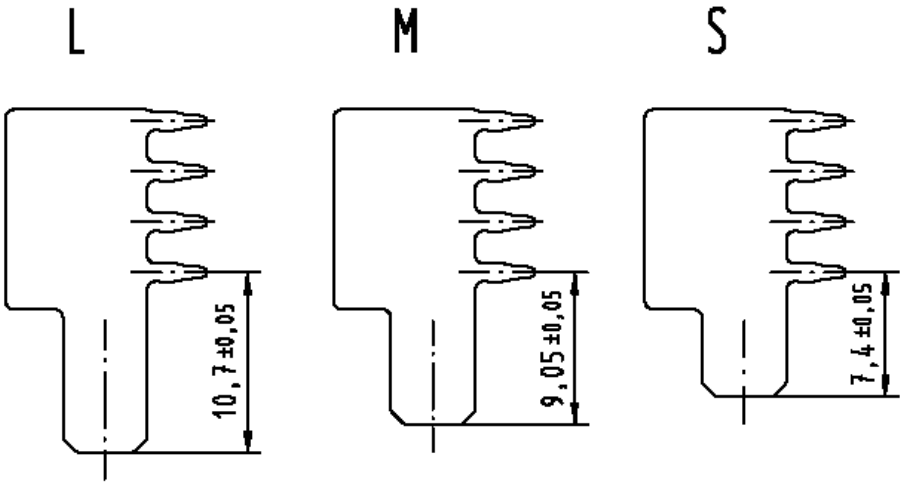

Figure D-2. Pin Lengths For Male Connector

D.7.2. Contact Loading

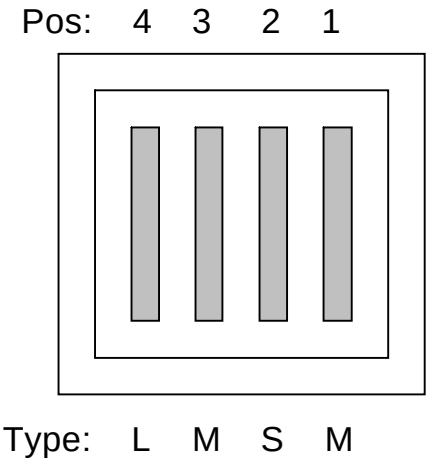

Figure D-3. OBSAI Sequenced Preferred

Copyright 2006, OBSAI, All Rights Reserved.
Confidential & Proprietary Information

T-Mobile Ex. 1009

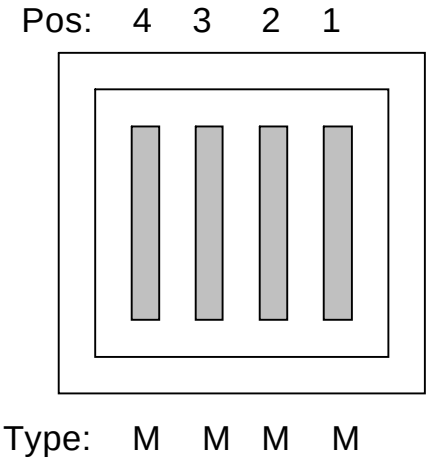

Figure D-4. OBSAI Non-Sequenced Alternative

Copyright 2006, OBSAI, All Rights Reserved.
Confidential & Proprietary Information

D.8. PCB Layout

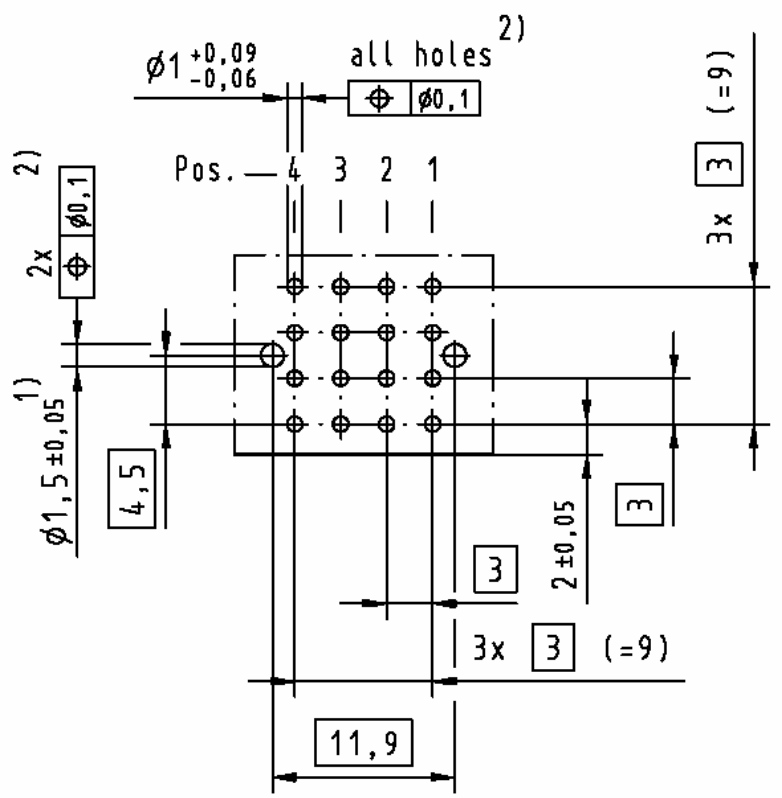

Figure D-5. Board Layout For Male Connector Press-Fit / PIHR, 4-Pin

1. Non-metallized drillings

2. Recommendation per IEC 326-3 for automatic component insertion is “extra fine” Tolerance given in Table 5 (∅ 0,05).

Copyright 2006, OBSAI, All Rights Reserved.
Confidential & Proprietary Information

D.9. Specification Drawings

D.9.1. Male Pressfit Connector

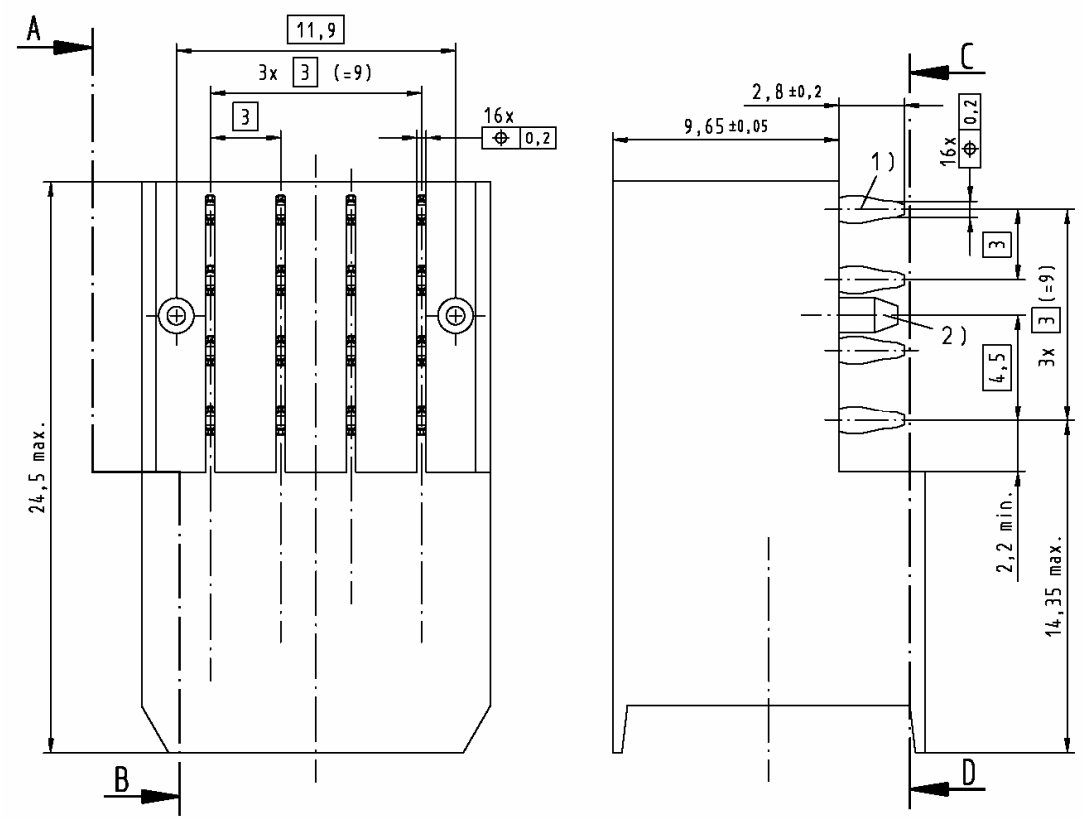

Figure D-6a. Male Connector Pressfit, 4-Pin

1) Press-fit section acc. to IEC 60352-5

2) Location peg

Copyright 2006, OBSAI, All Rights Reserved.
Confidential & Proprietary Information

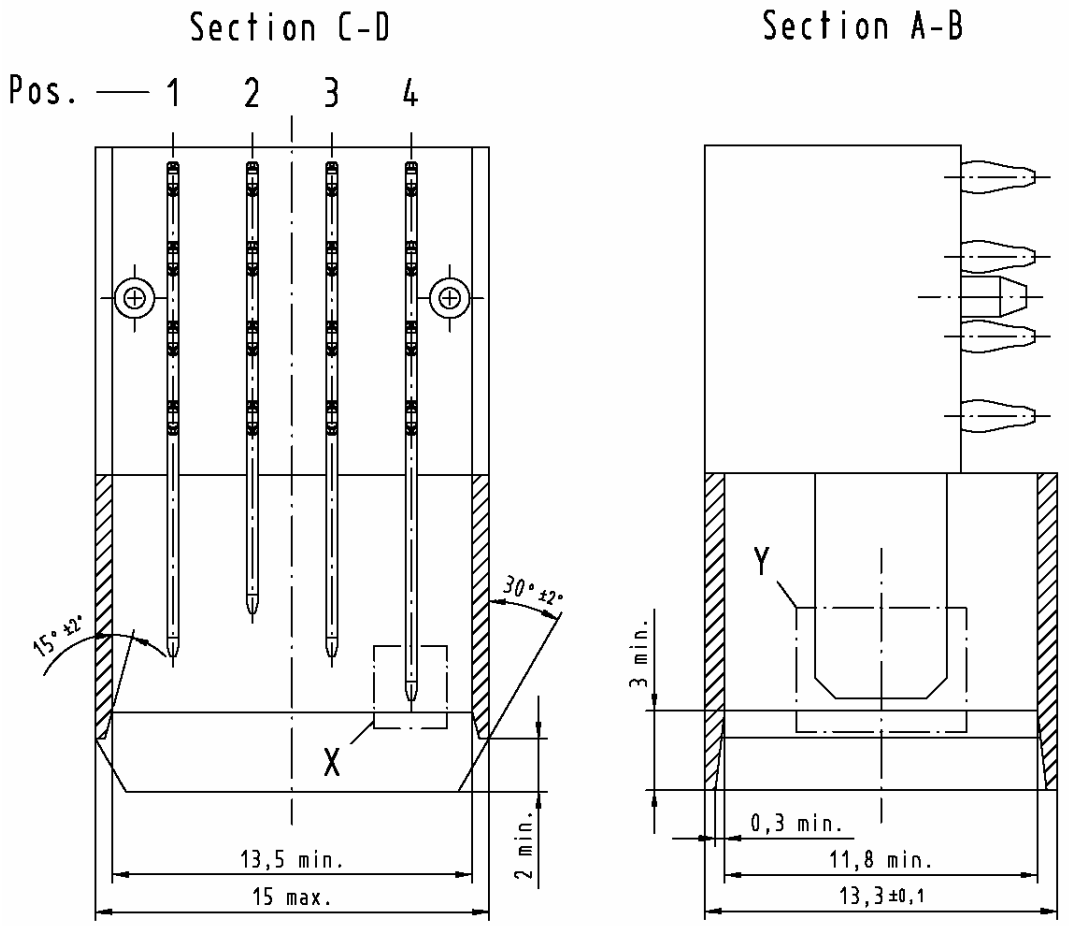

Figure D-6b. Male Connector Pressfit, 4-Pin

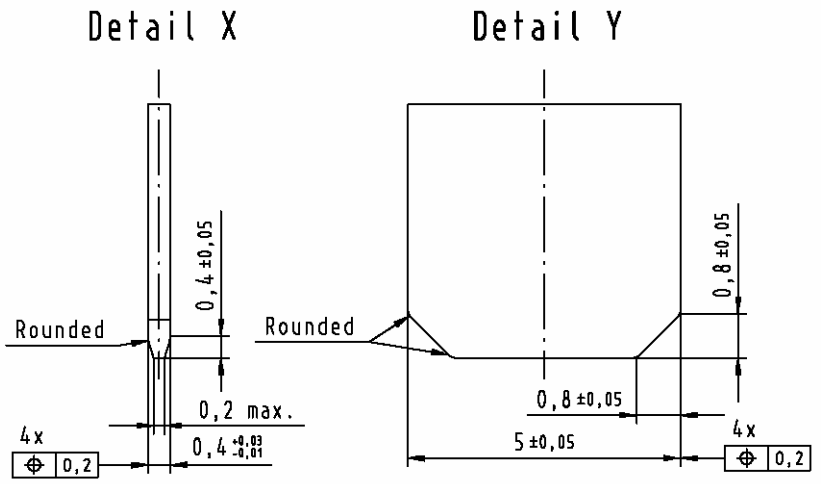

Figure D-6c. Male Connector Pressfit, 4-Pin

Copyright 2006, OBSAI, All Rights Reserved.
Confidential & Proprietary Information

D.9.2. Male PIHR Connector

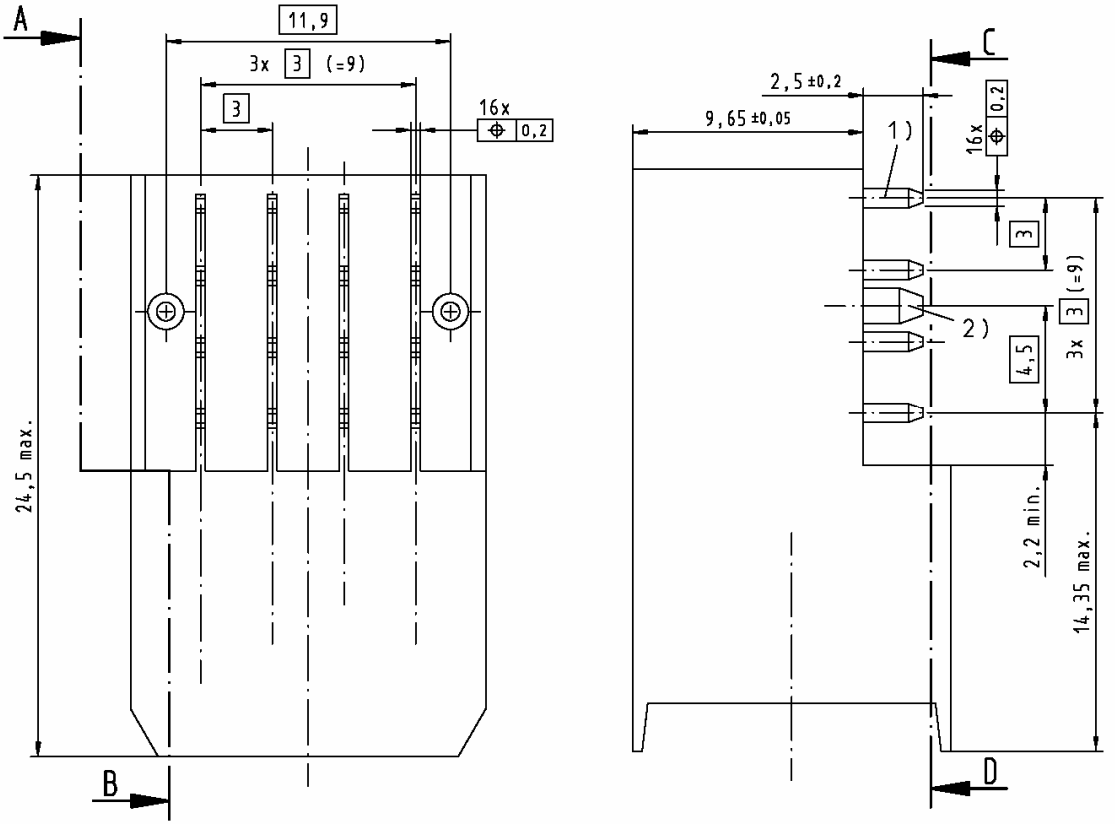

Figure D-7a. Male Connector PIHR, 4-Pin

1) Solder Pin acc. to IEC 60068-2-58

2) Location / locking pin

- Forces for locking-pin: insertion force: max 8N
  retention force: min 0,5N
- Remark: A locking mechanism is necessary to hold the connector in its position for reflow soldering. Whether this mechanism is a plastic peg as shown or something else is not relevant.

Copyright 2006, OBSAI, All Rights Reserved.
Confidential & Proprietary Information

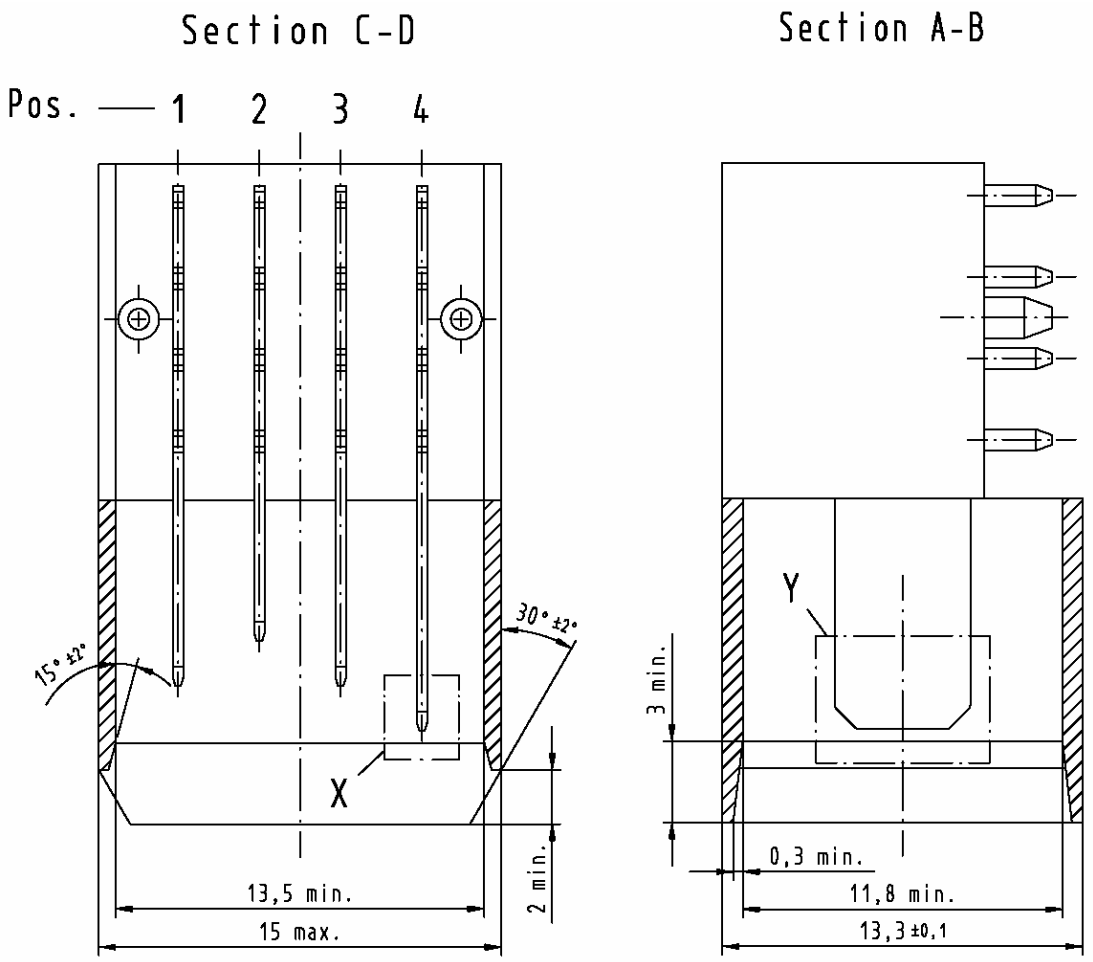

Figure D-7b. Male Connector PIHR, 4-Pin

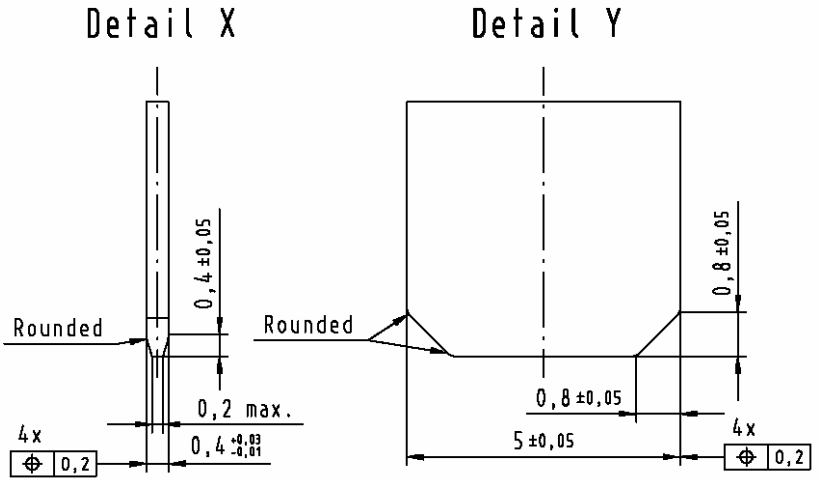

Figure D-7c. Male Connector PIHR, 4-Pin

Copyright 2006, OBSAI, All Rights Reserved.
Confidential & Proprietary Information

D.10. Reference Documents

MIL- STD- 883, method 2003,3

ETS 300 019-1-4:1992, class 4.1

ETS 300019-1-1:1991

ETS 300 019-1-2

IEC 60512-3, 5b

ISO 9001

Earthquake (zone 4 tests) GR-63-CORE

IEC 61076-4-101

IEC 60352-5 (01/02)

IEC 60068-2-58

IEC 326-3

Copyright 2006, OBSAI, All Rights Reserved.
Confidential & Proprietary Information

Appendix E. HARD-Metric Straight Female Power Connector Specification

E.1. Summary of changes

Version	Approved by	Date
0.01		Jan.29, 2004
0.02		Mar.03, 2004
0.03		Mar.09, 2004

E.2. Scope

Specification for Hard Metric, straight female.

4 pin electrical power connector.

Copyright 2006, OBSAI, All Rights Reserved.
Confidential & Proprietary Information

E.3. General Description

- Type: Power
- Connection method: Press-fit (PCB thickness ≥ 1,4 mm)
- Shape: Straight female
- Number of poles 4

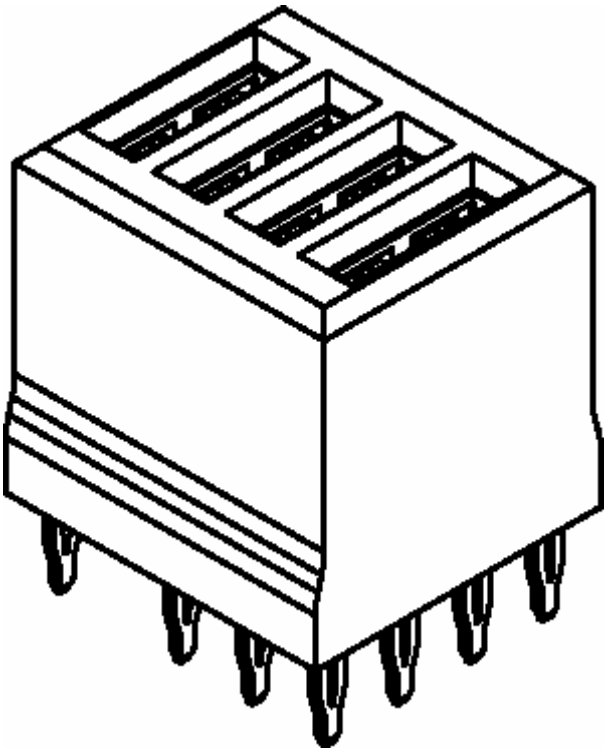

Figure E-1. Straight Female Connector, 4-Pin

E.4. Electrical Specification

- Operational temperature range: -45…+85 °C
- Max. Voltage (U): < 60 VDC
- Creepage distance: > 1,2 mm
- Clearance distance: > 1,0 mm
- Max. Current (I): 23 A at 80% derating and 70°C environmental temperature. Acc. to IEC 60512-3 test 5b. With two pins loaded.

Copyright 2006, OBSAI, All Rights Reserved.
Confidential & Proprietary Information

- Contact resistance (Ohm): < 0,003 O on mated pair
- Insulation resistance: > 1000 M O
- Voltage proof: 1500 V (RMS)

E.5. Mechanical Specification

- All mechanical dimensions are described in drawings in Section E.8.
- Allowed misalignment: = ± 1,0 mm
- Contact range / wipe: According to IEC 61076-4-101
- Basic material of the body: PC, PCT, PBT or similar. No high temp material required.
- Connector plastics: Shall be UL listed with V0.
- Contact material: Copper alloy
- Press-fit pin: press-in zone acc. to IEC 60352-5 (01/02)
- Weight (g): <10 g .
- Durability: ≥ 250 mating cycles (IEC 61076-4-101, performance level 2).

Connector must be compatible with ROHS requirements.

E.6. Environmental Requirement

Following values are a list of conditions where the connector will be used. Connector manufacturer does not have to test the connector according to these conditions. However this information must be taken into account in connector design. These requirements come from system requirements and might be extended by a connector environmental test specification in a separate document.

E.6.1. Environment Specification For Operation

Climatic conditions:

- Temperature range -45…+85°C.
- Relative humidity range 5…100% (ETS 300 019-1-4:1992, class 4.1).
- Absolute humidity range 0,26…29g/m^3 .
- Rate of temperature change 0,5°C/min.
- Air pressure range 70…106 kPa (ETS 300019-1-1:1991).

Copyright 2006, OBSAI, All Rights Reserved.
Confidential & Proprietary Information

Mechanical conditions:

1) Sinusoidal vibration:
   - Displacement — 3,5mm peak between 5…9 Hz
   - Acceleration — $2m/s^2$ (~0.2g)
   - Frequency range — 62…500 Hz
   - Sweeps — 5 sweep cycles for 3 direction increasing frequency (1dB/octave, logarithmic)
2) Shocks:
   - Shock spectrum — Half Sine
   - Duration — 11ms
   - Acceleration — $100\ m/s^2$ (10 g)
   - Number — 3 (may be extended for ~10 shocks)
   - Direction — 6 axis (+X, +Y, +Z, -X,-Y, -Z) (total 6 x 3)
3) Bump shocks:
   - Acceleration amplitude — $400\ m/s^2$ (40 g)
   - Pulse duration — 6 ms/ pulse
   - Number — 500 bumps in each of 6 directions.
4) Random:
   - ASD (14) — $0{,}96\ m^2/s^3$ or – 3 dB/oct
   - Direction — 3 (X, Y, Z)
   - Frequency — 5 – 20 – 800 Hz.
   - Duration — 3 * 10 min
5) Earthquake:
   - Earthquake (zone 4 tests) GR-63-CORE

E.6.2. Environment Specification For Transportation

Copyright 2006, OBSAI, All Rights Reserved.
Confidential & Proprietary Information

Climatic and mechanical conditions for units, modules and components:

- ETS 300 019-1-2: 1994 (testing methods) class 2.3.
- ETS 300 019-1-2: 1992 (requirements) class 2.3.

Copyright 2006, OBSAI, All Rights Reserved.
Confidential & Proprietary Information

E.7. PCB Layout

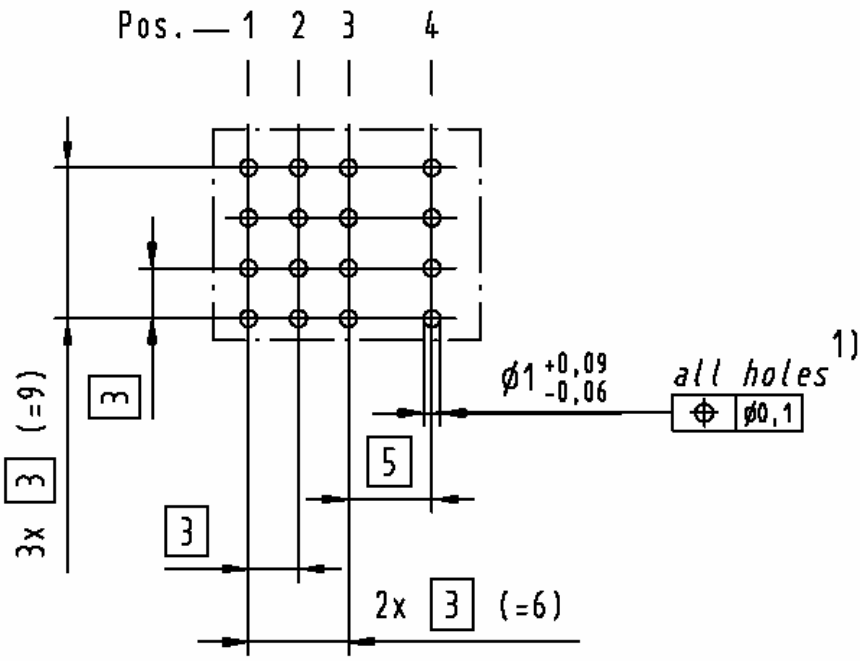

Figure E-2. Board Layout For Female Connector Press-Fit, 4-Pin

1) Recommendation per IEC 326-3 for automatic component insertion is “extra fine” Tolerance given in Table 5 (∅ 0,05).

Copyright 2006, OBSAI, All Rights Reserved.
Confidential & Proprietary Information

E.8. Specification Drawings

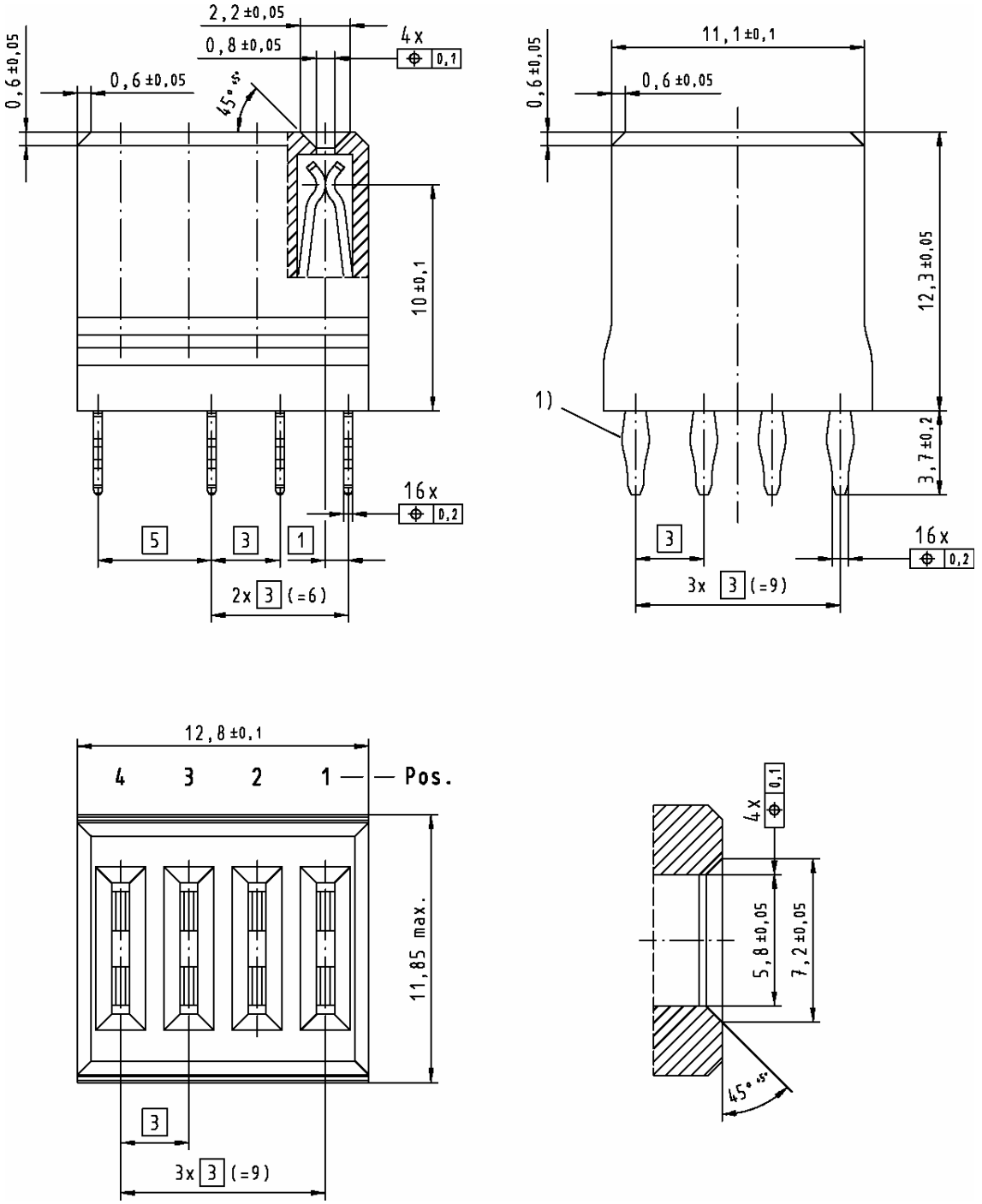

Figure E-3. Female Connector Press-Fit, 4-Pin

1) Press-fit section acc. to IEC 60352-5

Copyright 2006, OBSAI, All Rights Reserved.
Confidential & Proprietary Information

E.9. Reference Documents

- MIL- STD- 883, method 2003,3
- ETS 300 019-1-4:1992, class 4.1
- ETS 300019-1-1:1991
- ETS 300 019-1-2
- IEC 60512-3, 5b
- ISO 9001
- Earthquake (zone 4 tests) GR-63-CORE
- IEC 61076-4-101
- IEC 60352-5 (01/02)
- IEC 326-3

Copyright 2006, OBSAI, All Rights Reserved.
Confidential & Proprietary Information

T-Mobile Ex. 1009