Paper No. __

UNITED STATES PATENT AND TRADEMARK OFFICE

_____

BEFORE THE PATENT TRIAL AND APPEAL BOARD

_____

COMMSCOPE TECHNOLOGIES LLC.
Petitioner

v.

DALI WIRELESS INC.
Patent Owner

_____

Case IPR_____
U.S. Patent No. 10,080,178
Issued: September 18, 2018
Filed: July 29, 2016

_____

PETITION FOR *INTER PARTES* REVIEW OF U.S. PAT. NO. 10,080,178 UNDER 35 U.S.C. §§ 311-319 AND 37 C.F.R. § 41.100 ET SEQ.

_____

Table of Contents

Mandatory Notices iv

1. Real Parties-in-Interest iv
2. Related Matters iv
3. Lead and Back-Up Counsel iv
4. Service Information iv

Preliminary Matters 1

1. Standing 1
2. Identification of Challenge 1
3. Supporting Declaration 1
4. Fees 1

Introduction 2

Summary of the Challenged Patent 3

1. Distributed Antenna Systems 3
2. '178 Patent 3
3. Claims 4

Summary of the Asserted Prior Art 5

1. Primary References 5
   A. "Wu": U.S. Patent Application Pub. No. 2010/0128676 5
   B. "Oh": U.S. Patent No. 7,286,507 9

2. Secondary References 11
   A. "Sabat '552": U.S. Patent No. 6,963,552 11
   B. "OBSAI Standard" 13
   C. "CPRI Standard" 13

PTAB Found Similar Claims to be Invalid 13

Claim Construction 15

Level of Ordinary Skill 16

Argument 16

Ground 1: Wu anticipates Claims 1-25.....16
A. Independent Claim 10 16
B. Independent Claim 1 25
C. Independent Claim 15 26
D. Dependent Claims 2-6, 16-18.....27
E. Claim 7 29
F. Claims 8, 11, and 19 29
G. Claims 9, 20 31
H. Claim 12 31
I. Claim 13 33
J. Claim 14 34
K. Independent Claim 21 35
L. Dependent Claim 22.....39
M. Dependent Claim 23.....39
N. Dependent Claim 24.....40
O. Dependent Claim 25.....40

Ground 2: Claims 1-25 are obvious based on Wu or Wu in light of Sabat '426 41

Ground 3: Claims 8, 11, 19, 21, 23-25 are obvious based on Wu combined with the OBSAI Standard 43

Ground 4: Claims 8-9, 11, 19-25 are obvious based on Wu combined with the CPRI standard 43

Ground 5: Wu plus Sabat '552 renders Claims 26-30 obvious 44
A. Independent Claim 26 44
B. Claim 27 47
C. Claim 28 47
D. Claim 29 49
E. Claim 30 49

Ground 6: Oh anticipates Claims 1-8, 10-11, 13, 15-19, 21, 23-24 49
A. Independent Claim 10 49
B. Independent Claim 1 65
C. Independent Claim 15 66
D. Independent Claim 21 67

E. Dependent Claims 2-6, 16-18 78
F. Dependent Claims 7 and 24 80
G. Dependent Claims 8, 11, 19 81
H. Dependent Claim 13 81
I. Dependent Claim 23 82

Ground 7: Oh + Wu renders obvious Claims 1-8, 10-11, 13, 15-19, 21, 23-24 83
A. Independent Claims 1, 10, 15, 21 83
B. Dependent Claims 2-6, 16-18 85
C. Dependent Claims 7 and 24 86

Regarding the Board's Discretion 87

Conclusion 89

Claims Listing Appendix A1

Appendix B: Exhibit List A7

Mandatory Notices

1. Real Parties-in-Interest

CommScope Technologies LLC, CommScope, Inc. of North Carolina, CommScope, Inc, and CommScope Holding Company, Inc. are the real parties-in-interest.

2. Related Matters

The challenged patent was asserted against petitioner in a complaint in *Dali Wireless, Inc.* v. *CommScope Technologies LLC et al,* Case No. 1:19-cv-00952-MN (D. Del.). The complaint was served on August 16, 2019.

3. Lead and Back-Up Counsel

Lead Counsel	Backup Counsel
Philip P. Caspers, Reg. No. 33,227 Capella Tower, Suite 4200 225 South Sixth Street Minneapolis, MN 55402 pcaspers@carlsoncaspers.com Phone: 612.436.9617 Fax: 612.436.9605	Samuel A. Hamer, Reg. No. 46,754 Capella Tower, Suite 4200 225 South Sixth Street Minneapolis, MN 55402 shamer@carlsoncaspers.com Phone: 612.436.9615 Fax: 612.436.9605

4. Service Information

Please address all correspondence and service to both counsel listed above. Petitioner consents to service by email at the email addresses listed.

Preliminary Matters

1. Standing

Petitioner certifies that IPR is available for the '178 Patent and that Petitioner is not barred or estopped.

2. Identification of Challenge

Petitioner requests invalidation of claims 1-30.

	Claims	Basis for Unpatentability
Ground 1	1-25	Anticipated by Wu
Ground 2	1-25	Obvious based on Wu alone or + Sabat '426
Ground 3	8, 11, 19, 21, 23-25	Obvious based on Wu + OBSAI
Ground 4	8-9, 11, 19-25	Obvious based on Wu + CPRI
Ground 5	26-30	Obvious based on Wu + Sabat '552
Ground 6	1-8, 10-11, 13, 15-19, 21, 23-24	Anticipated by Oh
Ground 7	1-8, 10-11, 13, 15-19, 21, 23-24	Obvious based on Oh + Wu

3. Supporting Declaration

Petitioner submits declarations from Dr. Acampora and Dr. Kenington (Exs. 1003, 1009).

4. Fees

Petitioner authorizes the Patent Office to charge Deposit Account No. 502880 for the fee set forth in 37 C.F.R. § 42.15(a) and for any other required fees.

Introduction

The ‘178 patent claims are directed to reconfigurable distributed antenna system (DAS). Ex. 1001 at Abstract. The Wu and Oh prior art references, however, already disclose such reconfigurable systems. Ex. 1005 (Wu) at Abstract (“Carrier channels can be allocated or routed individually or as a group according to *reconfigurable* routing policy.”); ¶0046 (“*allocate more channels*”); Ex. 1023 (Oh) at 7:36-37(“DAS hub 26 will maintain in data storage a set of mapping data 46”); 9:44-10:9 (“…allowing mapping data 46 to be *configured and modified…to add*…correlations”). Wu and Oh anticipate nearly all claims and render the rest obvious.

Summary of the Challenged Patent

1. Distributed Antenna Systems

A distributed antenna systems (DAS) extends wireless coverage to devices in hard-to-reach areas (e.g., inside a building). Conventional elements of a DAS are a host unit coupled by cables to remote units. The host unit often is in a building's basement and the remote units on different floors. The signals from a base station are provided to the host unit, which relays them to the remote units to be re-broadcast closer to the end-user devices (e.g., cell-phones).

2. '178 Patent

The '178 patent observes that network planners prefer DAS with "dynamic flexibility" because "network conditions and subscriber needs" are "ever-changing." Ex. 1001 at 1:30-52.

The '178 patent discloses a DAS with dynamic flexibility. Figure 1 is illustrative:

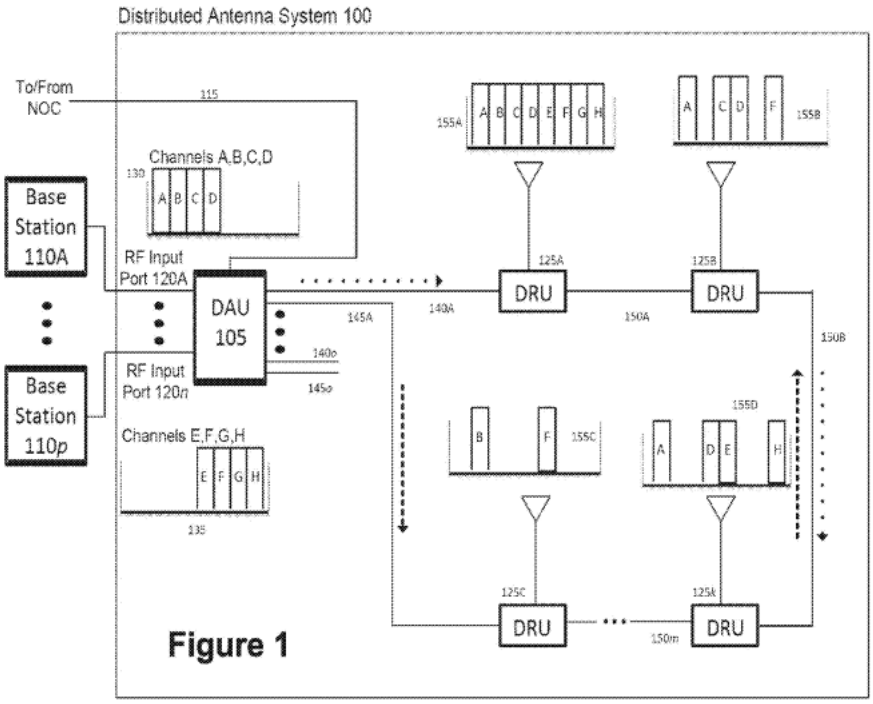

Id. at Fig. 1; 3:55-58. DAS (100) includes a host unit (DAU, 105) and remote units (DRUs, 125). The DAU receives signals from base stations (110). Each remote unit (DRU) is assigned a set of the channels/carriers. Figure 7 shows that the DAU and DRUs include software modules. Through this software, the DAU is able to "automatically" re-allocate channels/carriers assigned to the DRUs. Id. 8:10-21.

3. Claims

The '178 patent has 5 independent claims (1, 10, 15, 21, 26). The first three substantially overlap (Claims 1, 10, 15). They each involve sending a "first set" of downlink channel signals to a remote and sending a different "second set" to the same remote at a different time, i.e., changing which downlink channel signals are

sent to a remote unit. Claims 1, 10, and 15 repeat many of the same elements, but vary in whether they recite a system, method, or host of the system. Claim 21 involves sending different subsets or portions of the signals to different remotes. Claim 26 overlaps with Claim 21, but it further adds elements about "additional" host units. The Claims Appendix lists the full text of each of the claims and labels each element with a letter (A, B, C, etc). Due to the overlap in the claims, the petition refers to the claim elements by these letters.

Summary of the Asserted Prior Art

1. Primary References

A. "Wu": U.S. Patent Application Pub. No. 2010/0128676

Wu (Ex. 1005) was filed Nov. 11, 2009 and published on May 27, 2010. It is at least 102(e) art. Wu describes carrier transport systems for use by wireless carriers to transport signals from base stations into wireless coverage areas. Wu notes that wireless service providers utilize various bands of frequencies. Ex. 1005 ¶0003. Each service provider uses one or more carrier channels within their frequency bands to carry voice or other data. *Id*.

Wu discloses that known systems utilize a terminal that digitizes entire frequency bands from base stations and that then transmit the digitized signals over fiber links to remote transceiver units (RTUs) in a coverage area. *Id.* ¶¶0004-05. Wu explains that such systems lack "fine grained control" over carrier channels

and lack the ability to allocate carrier channels from one cell region to another in response to various events or conditions. *Id.*

Wu, therefore, discloses an improved system that allows fine grained control over carrier channels from a single band or multiple bands by splitting carrier channels from their bands and routing channels "individually, collectively as shown, or in arbitrary groups" to RTUs as desired using a matrix switch according to a routing policy, where the routing policy can be updated or reconfigured as desired. *Id.* ¶0049; *see also id.* ¶¶0009, 0011; 0038-39, 0047. Wu discloses that "more channels" can be allocated when needed to increase the bandwidth available in a particular region. *Id.* ¶¶0046; ¶¶0039-45.

Figure 1 of Wu shows the basic components of its carrier transport system:

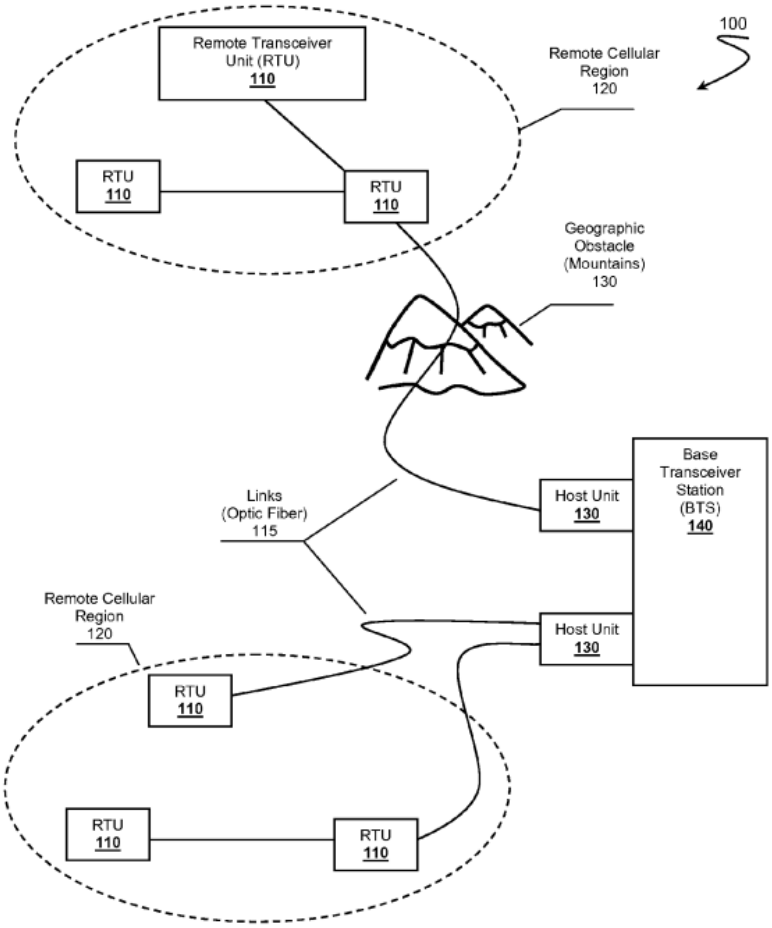

Figure 1

Id. at Fig. 1.

Figure 2 of Wu, shows the matrix switch 250 that, in combination with units 230, can individually route different channels to different remote transceiver units 410. *Id.* ¶¶0038-40.

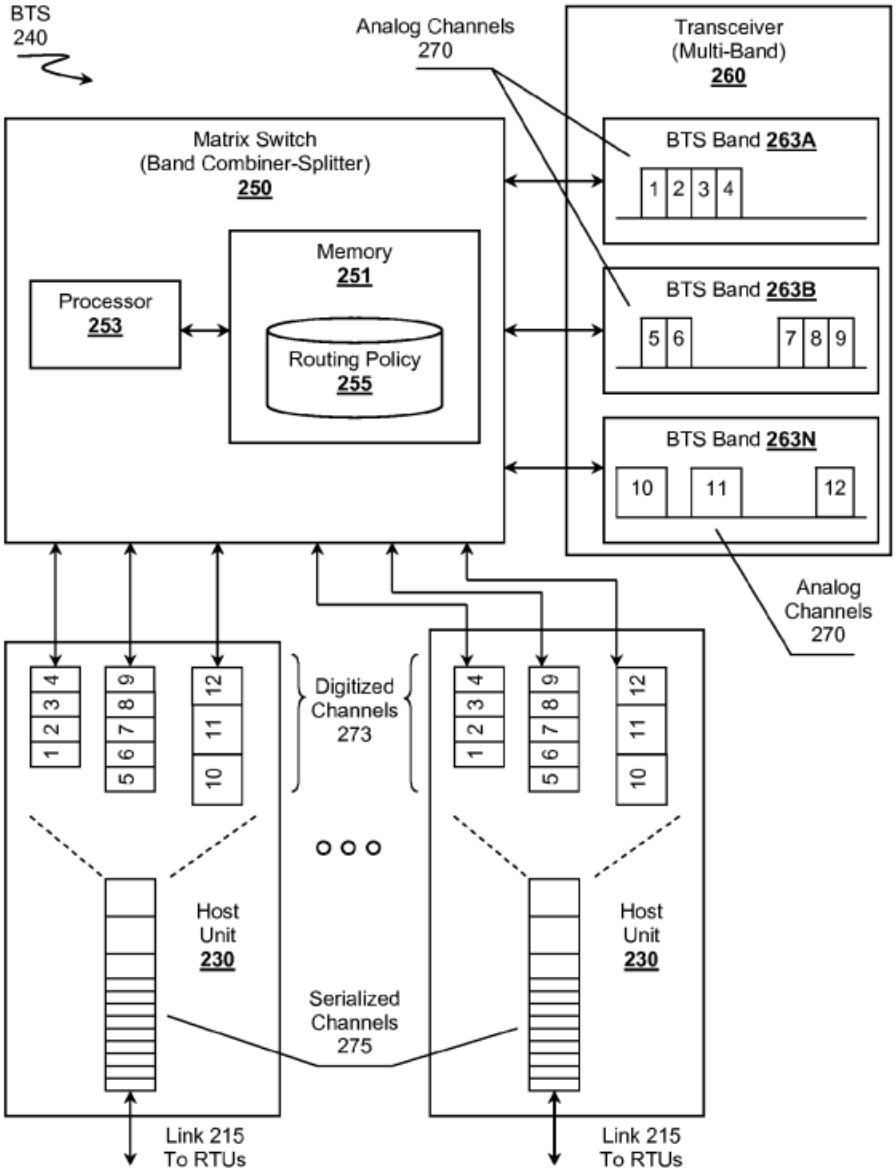

Figure 2

Id. at Fig. 2.

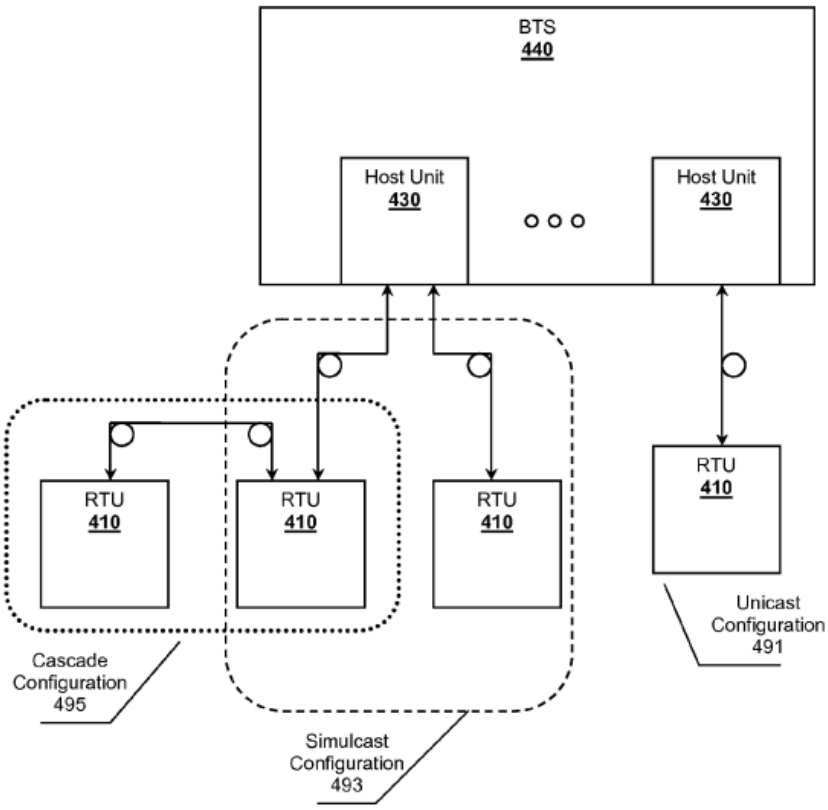

Figure 4

Id. at Fig. 4.

The system utilizes standard protocols for communicating signals over the links, including OBSAI or CPRI. *See id.* ¶0031; ¶0049.

B. "Oh": U.S. Patent No. 7,286,507

Oh (Ex. 1023) issued October 23, 2007. It is 102(b) art. Oh discloses an improved DAS where the host unit (hub) has "mapping data" (46) that allows it to dynamically "change distribution of RAN capacity." Ex. 1023 at 9:53-57.

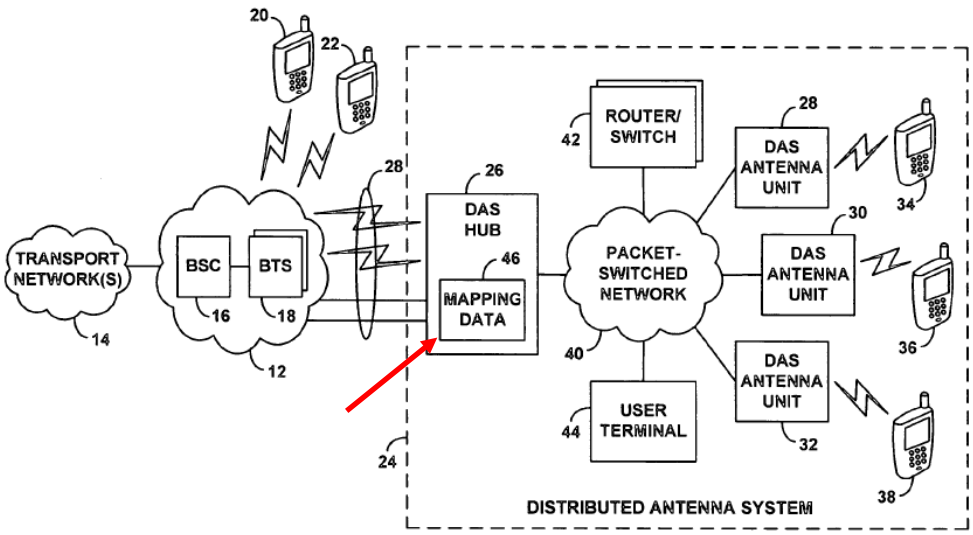

FIG. 1

Id. at Fig. 1. Hub (26) receives signals from the network (12) called the "RAN," which include plural base stations (18). *Id.* at 4:32-46. These signals correspond to "RAN coverage segments." Oh's system works on a wide variety of types and granularities of RAN coverage segments, including a "sector," combination of sectors, or a "portion" that uses a "particular carrier frequency". *Id.* at 2:64-3:5; 4:50-64.

The hub uses mapping data to determine which set of RAN coverage segments should be sent to which remote units. *Id.* at 7:35-42. The mapping data may be a data table:

DAS MAPPING DATA	
RAN COVERAGE SEGMENT(S)	DAS ANTENNA UNIT IP ADDRESS(ES)
A	xxx.xxx.xxx.1, xxx.xxx.xxx.2, xxx.xxx.xxx.3, xxx.xxx.xxx.6
B	xxx.xxx.xxx.5
C	xxx.xxx.xxx.4

FIG. 2

Id. at Fig. 2. Using the addresses of the antenna units, each RAN coverage segment is correlated to one or more DAS Antenna Units, and each DAS Antenna Unit can be correlated to one or more RAN coverage segments. *Id.* at 7:37-43; 9:21-24. Oh teaches the mapping data may be freely edited "to add" or "to remove" correlations, i.e., change which set of RAN coverage segments should be sent to which remote units. *Id.* 3:46-60, 9:44-58. Through the mapping data, the DAS hub can be configured to route any RAN coverage signal to any DAS antenna unit.

2. <u>Secondary References</u>

A. "Sabat '552": U.S. Patent No. 6,963,552

Sabat '552 (Ex. 1011) issued November 8, 2005. It is 102(b) art. Sabat '552 discloses a system that allows different wireless service providers to share the network infrastructure. Figure 1 shows, for example, that hubs 35 located at hub

sites 30 communicate signals from base stations (BTSs) to distributed remote radio antenna nodes 50. Figure 1 and 6:22-30 and 6:55-62 disclose that hubs 35 are connected by digital cross connects (37) so that signals from any service provider's BTS can be routed to any of the remote antenna nodes, even those that are not directly connected to the hub site where the BTS resides.

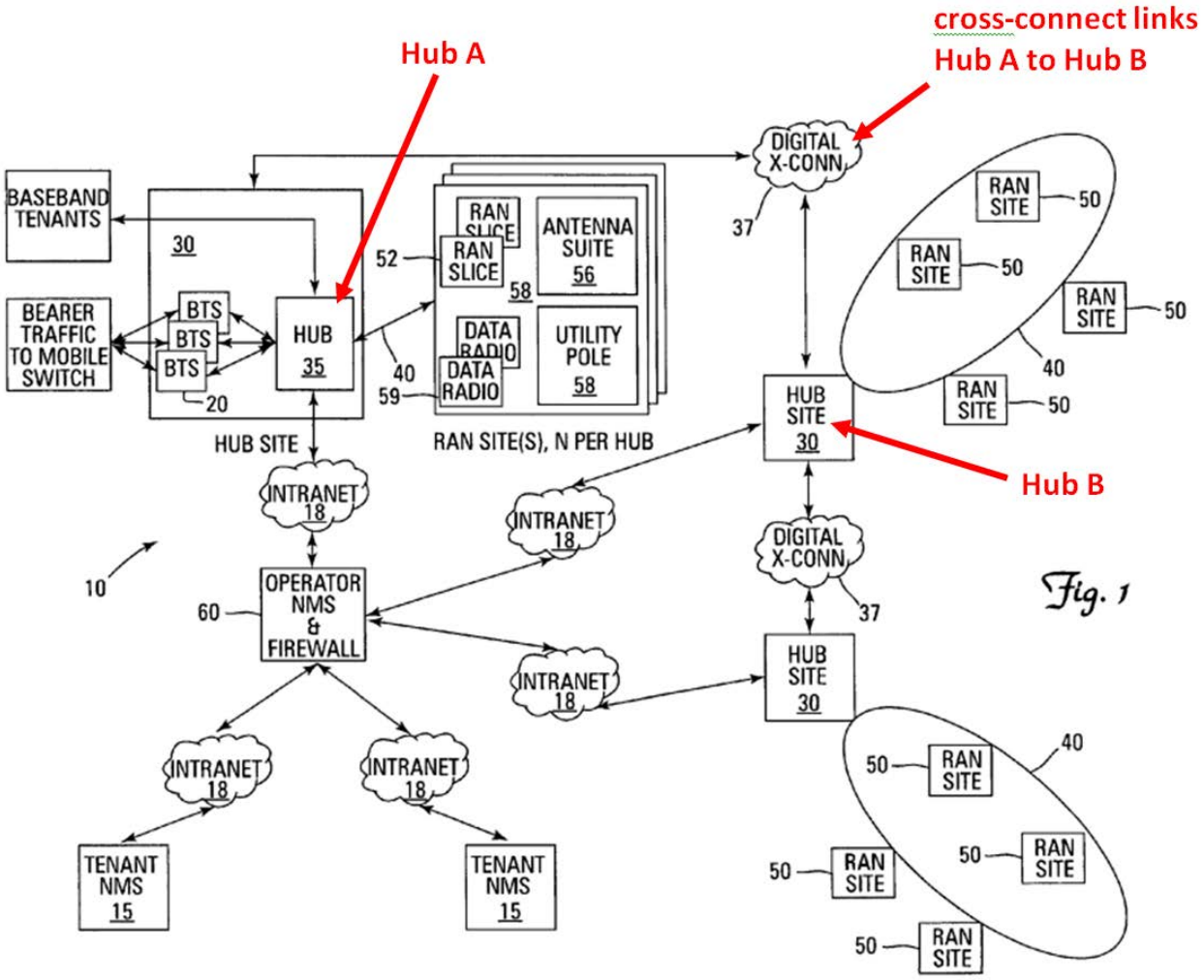

Ex. 1011, Fig. 1 (annotated).

B. "OBSAI Standard"

The OBSAI Standard (Exs. 1007, 1008) is a well-known open publication publicly available more than one year prior to the '178 patent and therefore, constitute 102(b) prior art. Ex. 1009 ¶10.

C. "CPRI Standard"

The CPRI Standard (Ex. 1006) is a printed publication dated June 30, 2008, which is 102(b) prior art. Ex. 1003 ¶162-167.

PTAB Already Invalidated Similar Claims

Patent Owner may argue that Wu and Oh were disclosed during prosecution. To be clear, there was no substantive discussion of Wu or Oh in the prosecution.

More importantly, Patent Owner did not disclose a critical fact about Wu and Oh. Patent Owner failed to inform the examiner that the *PTAB had found a reasonable likelihood that Wu and Oh invalidated nearly identical claims in a co-pending IPR.*

Patent Owner owns an earlier patent (9,531,473), which has an overlapping specification with the present patent. Ex. 1040. The claims of the '473 patent are strikingly similar to the claims of the '178 patent. Compare Ex. 1001 with Ex. 1040. Dr. Acampora provides charts showing this. Ex. 1003 ¶34. During prosecution of the '178 patent, the PTAB instituted IPR of the '473 patent. The institution decision found a reasonable likelihood that both Wu and Oh would

anticipate numerous claims of the '473 patent. Ex. 1036 at 30, 37-38. Ultimately, the PTAB invalidated all challenged claims in the '473 patent based on Wu (and therefore did not even reach grounds based on Oh). See Ex. 1037 at 35, 37.[1]

Patent Owner concealed this highly relevant fact from the examiner. Patent Owner disclosed only the *petition*, but did not disclose the PTAB's actual decision to institute the IPR.

Thus, the PTAB should reject any argument that IPR is not needed here because Oh and Wu were disclosed during prosecution. These references were *never discussed* and the PTAB has already decided that very similar claims are invalid in view of Wu and Oh.

[1] The prior IPR final decision and any appeal thereof is being held in abeyance by the PTAB pending resolution of the *Arthrex* issues.

Claim Construction

Petitioner presently believes the plain meaning of the claims is enough to resolve this petition. The prior art references use the same or very similar phrases to the claims. The following two constructions may be helpful, but Petitioner does not believe construction is necessary to resolve Petitioner's specific grounds:

"host unit." This term appears in all the independent claims. A "host unit" is a unit that transports and controls communications between remote units and the signal source. Ex. 1003 ¶30.

"dynamically change"/"dynamically changes." These terms appear in dependent claims 2-6, 16-18. These terms mean the host unit is itself able to make the claimed change instantly in response to conditions as they occur (i.e., automatically change).

The phrase "*dynamically* change" requires more than just change. To "dynamically" change refers to the ability of the host unit itself to be able to make changes in response to changes in conditions as they happen without waiting for manual intervention—in other words automatically.

Petitioner's construction is consistent with the definition of dynamic in technical and non-technical dictionaries.

> "[dynamic] tends to mean that our equipment – hardware and/or software – can *respond instantly to changes as they occur*. For

example, dynamic routing in the call center world means … a machine can switch the incoming calls from moment to moment."

Ex. 1039 at 3 (emphasis added); 4 ("dynamic routing" means "routing that adjusts automatically to changes in network topology or traffic"); 7 ("characterized by continuous change…"); 10 ("characterized by constant change…").

Petitioner's construction is consistent with the specification. The specification emphasizes the need for dynamic capabilities to respond to "ever-changing" conditions. Ex. 1001 1:46-50. The specification also contrasts "dynamic" from "manual." Ex. 1001 11:4-5 ("dynamic and/or manual"); 6:19-21, 6:32-34; 6:53-59; 11:25-28. Systems requiring manual intervention to effect change cannot react to "ever-changing" or "constantly" changing conditions the way a dynamic, i.e., automatic systems can. Ex. 1003 ¶¶26-29.

Level of Ordinary Skill

A person of ordinary skill (POSA) would have a bachelor's degree in electrical engineering (or equivalent field) *with* 2-3 years of work experience in wireless communications. Ex. 1003 ¶19-21.

Argument

1. Ground 1: Wu anticipates Claims 1-25

A. Independent Claim 10

Wu anticipates claim 10. Figs. 1, 2, and 4 of Wu are reproduced below (with annotations).

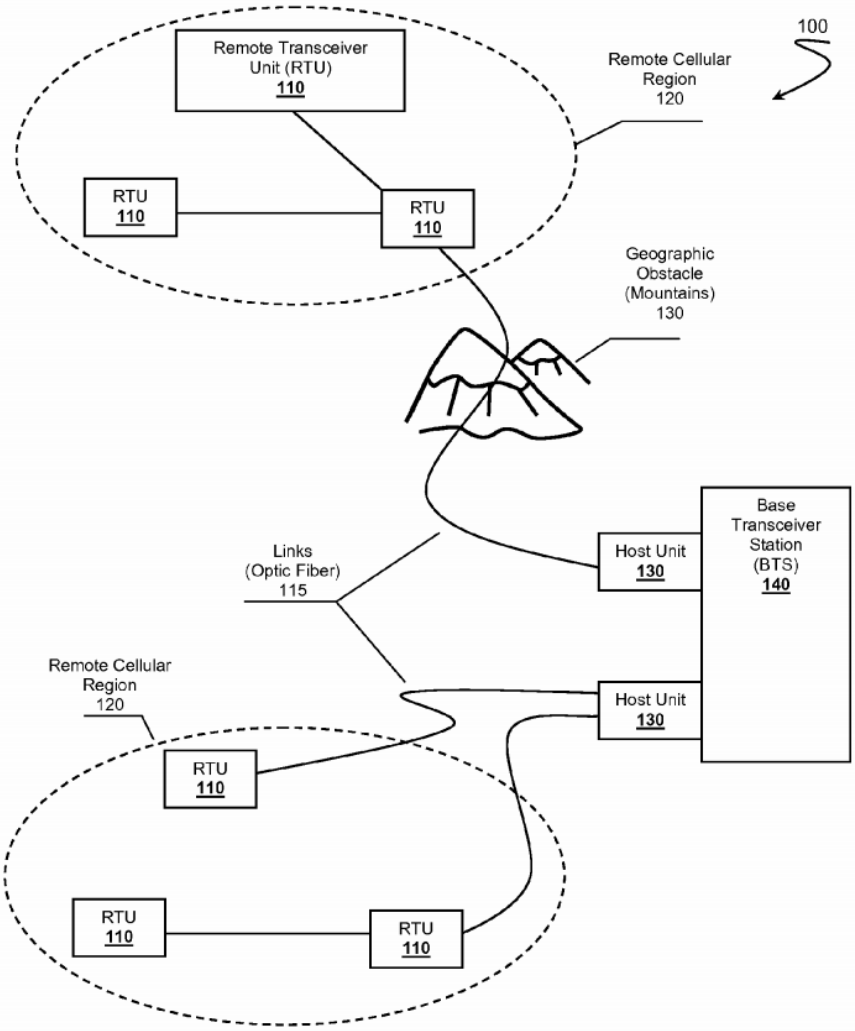
100
Remote Transceiver Unit (RTU) 110
Remote Cellular Region 120
RTU 110
RTU 110
Geographic Obstacle (Mountains) 130
Base Transceiver Station (BTS) 140
Host Unit 130
Links (Optic Fiber) 115
Host Unit 130
Remote Cellular Region 120
RTU 110
RTU 110
RTU 110

Figure 1

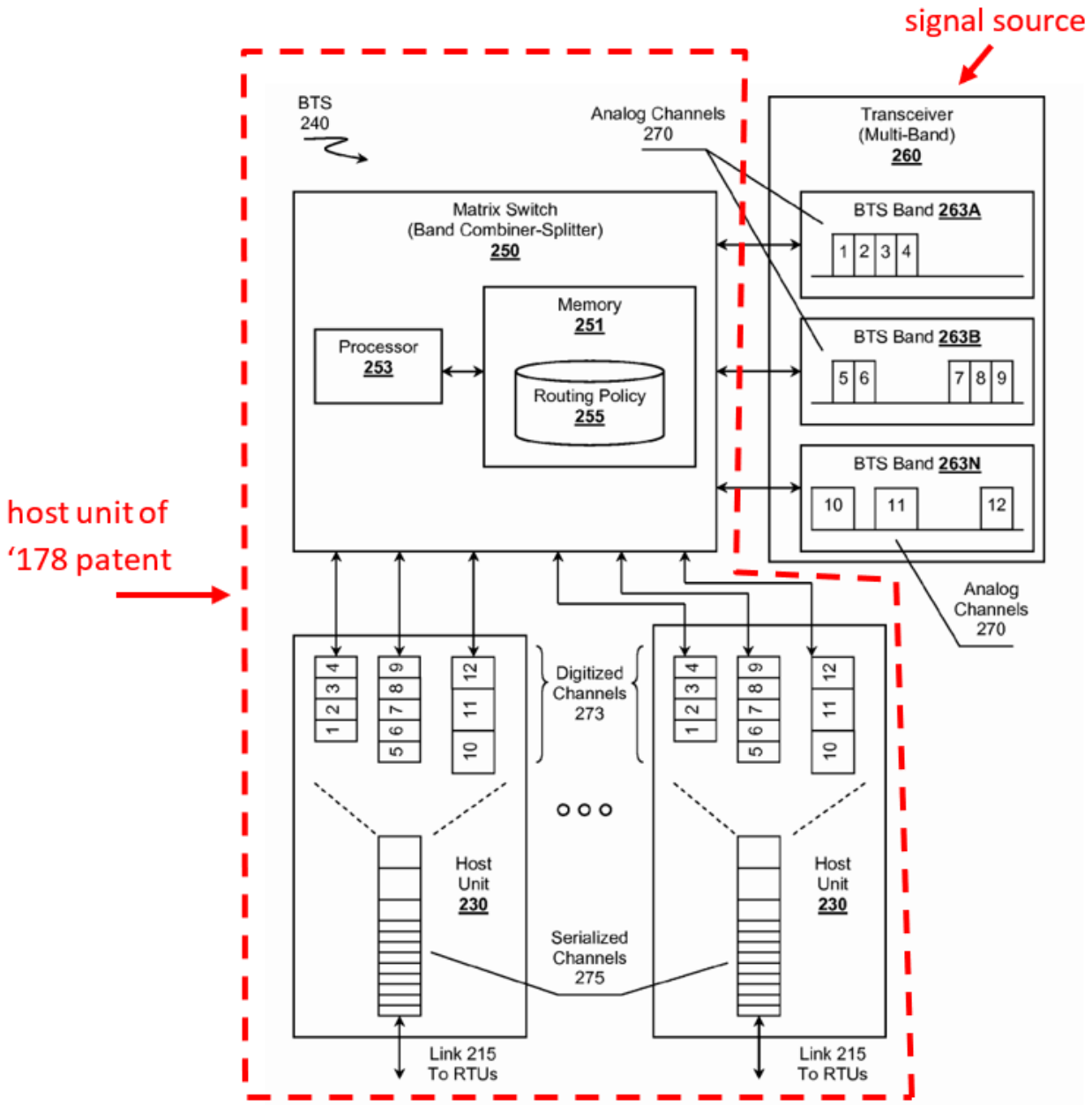
signal source
host unit of
'178 patent
BTS
240
Analog Channels
270
Transceiver
(Multi-Band)
260
Matrix Switch
(Band Combiner-Splitter)
250
BTS Band 263A
1 2 3 4
Memory
251
Processor
253
Routing Policy
255
BTS Band 263B
5 6 7 8 9
BTS Band 263N
10 11 12
Analog
Channels
270
Digitized
Channels
273
Host
Unit
230
Serialized
Channels
275
Link 215
To RTUs

Figure 2

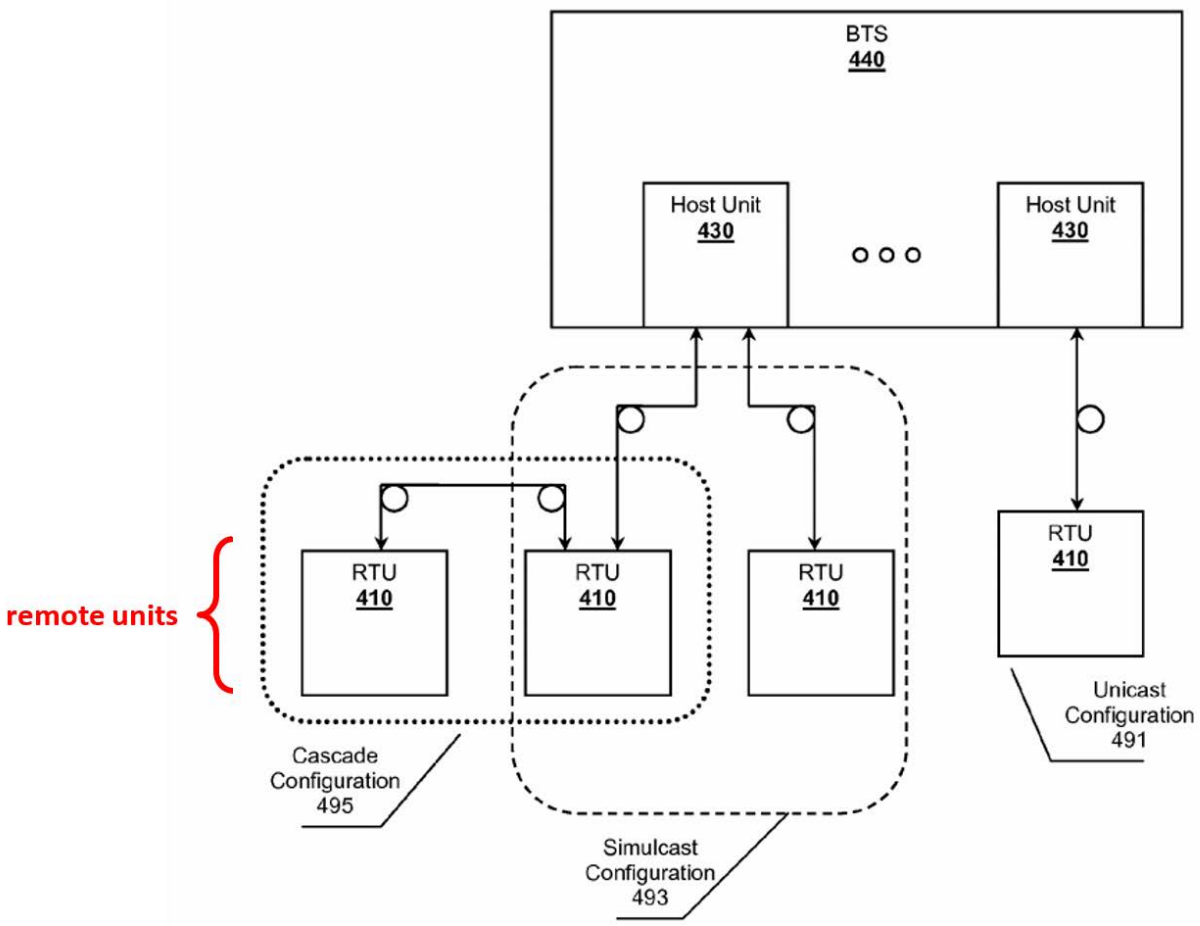

Element A: "A system for transporting wireless communications…"

Wu discloses "[a] better carrier channel transport system …." *Id.* ¶0009; *see also* Ex. 1005 ¶0002 ("[t]he field of the invention is *wireless* carrier channel technologies."); Ex. 1003 ¶38.

Element B: "a host unit…"

The combination of the matrix switch 250 and units 130, 230 in Wu make up the host unit of Claim 10. What Wu calls the host unit (unit 230) is not the entirety of the claimed host unit of Claim 10. The combination of the switch 250 and units 230 make up a system that manages communications to and from the plurality of

RTUs and on behalf of the RTUs to and from the signal source (transceiver 260 of the BTS). Units 130 are shown to be co-located at the BTS in FIG. 1 of Wu (and also in Figure 4). Figure 2 shows a matrix switch is included in the system between units 230 (which are the same units 130 from Figure 1) and the BTS transceiver 260. To be clear, units 130 and 230 are described as host units by Wu, but to avoid confusion, the following analysis will try to refer to unit 230 as "unit 230" instead of using Wu's phrase "host unit." Ex. 1003 ¶39.

Likewise, Figure 2, shows multiple components of a BTS. When reading the '178 claims on the Wu system, the matrix switch is included in the claimed host unit, while the multiband transceiver corresponds to the signal source. *Id.* ¶40.

The PTAB already found that Wu's matrix switch and host unit combined can be considered a "host unit." Ex. 1037, at 21-22. The same Patent Owner attempted to claim a "host unit" that selectively routes radio resources. The PTAB invalidated all the challenged claims, finding, "Wu discloses the claimed host unit as a combination of the matrix switch and host units." Ex. 1037, at 21 ("Identity of terminology is not required) and p. 18 (includes Wu Fig. 2, annotated to illustrate the issue decided; reproduced below); see also p. 22 (PTAB also agreed "that it would have been obvious to place the functionality of both Wu's matrix switch and host units in a single unit.")

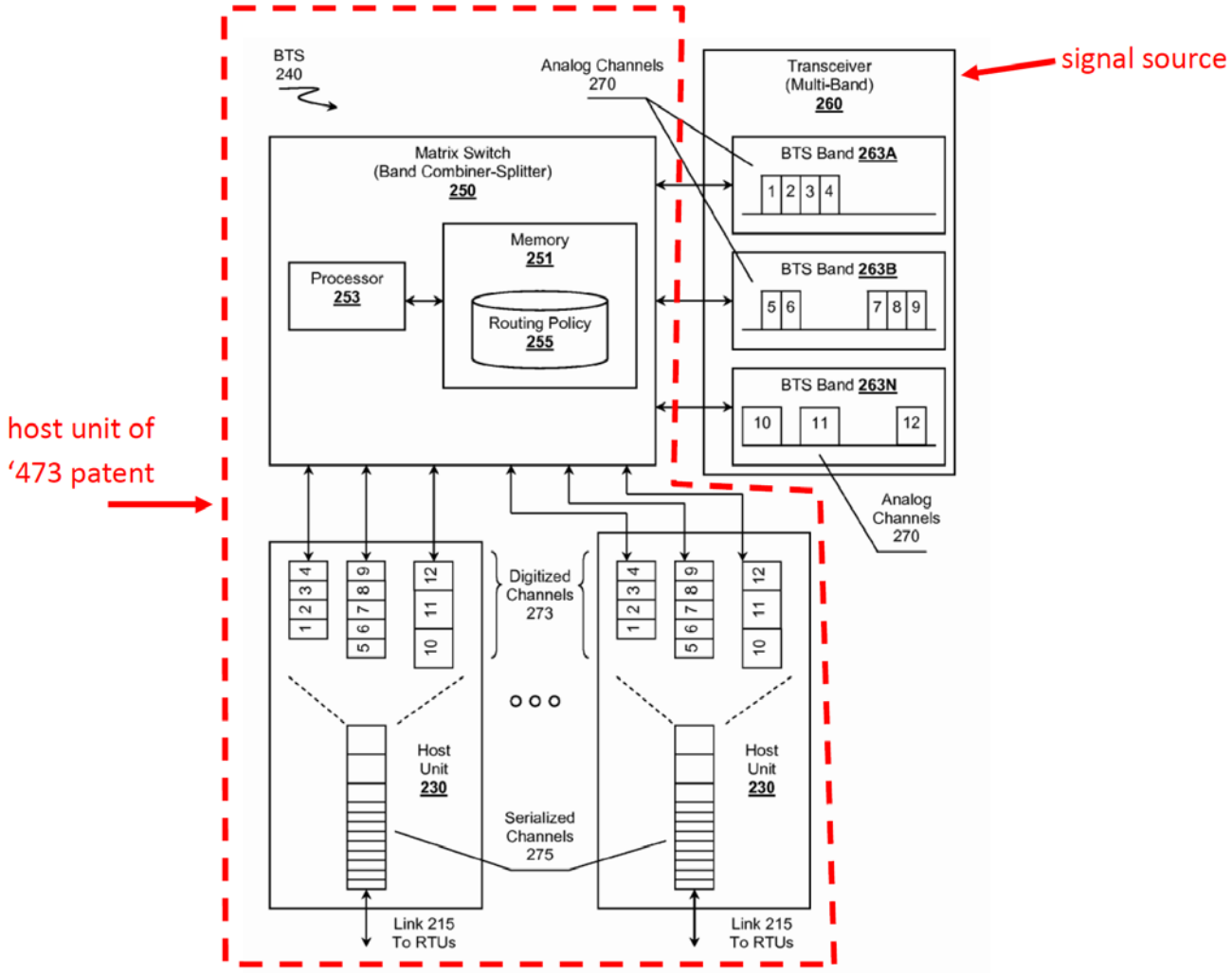

Figure 2

Ex. 1037 at 18, 20-22. By the same analysis, Wu's matrix switch 250 and the host units 250 also correspond to a host unit as claimed by the '178 patent.

Element C: "a plurality of remote units, including a first remote unit and a second remote unit…"

The remote transceiver units (RTUs 110, 310, 410) in Wu are a plurality of remote units. *See, e.g.*, Ex. 1005 at Fig. 1, ¶¶0030, 0033, ¶0011; Ex. 1003 ¶41.

Element D1: "wherein the host unit comprises at least one interface to communicatively couple the host unit to at least one signal source…"

Figure 2 of Wu shows that matrix switch 250 communicates with a multi-band transceiver 260, which is a signal source. The communication links shown, e.g., in Figure 2, between the matrix switch and the transceiver 260 inherently include an interface in the matrix switch for communicating over these lines to the multi-band transceiver. Id. ¶42. Therefore, the host unit, which includes the matrix switch, includes an interface that communicatively couples the matrix switch to a signal source.

Element E: "wherein the host unit is configured to receive a plurality of downlink channel signals from the at least one signal source"

The matrix switch 250 receives a plurality of downlink channel signals from the multi-band transceiver 260. Id. ¶43. The downlink channel signals are shown as channels 1-12 in Figure 2. Ex. 1005 at Fig. 2; ¶0038.

Element F: "wherein the host unit is configured to send digital representations of the plurality of downlink channel signals to the plurality of remote units…"

Wu discloses that the combination of matrix switch 250 and units 230 provide fine grained control to send digital representations of the downlink channel signals individually or in arbitrary groups to RTUs.. Ex. 1005 ¶¶0009, 0011, 0038-39, 0047, 0049; Ex. 1003 ¶¶44-49. Units 230 also include analog-to-digital converters for relaying digitized representations of the carrier signals between the

BTS 140 and the RTUs. *See, e.g.*, Ex. 1005 ¶¶0030, 0054, Fig. 6-2 ("ADC"); Ex. 1003 ¶¶56.

Element G: "wherein the host unit is configurable to send digital representations of a first set of downlink channel signals to the first remote unit at a first point in time, the first set of downlink channel signals for transmission at an antenna of the first remote unit"

The matrix switch is configurable so that channel signals are sent individually, collectively, or "in arbitrary groups" (which are sets) to remotes for transmission at an antenna. Ex. 1005 ¶0049; Claim 16 ("a set of carriers"); *see also* Ex. 1003 ¶50.For the reasons explained above with respect to the previous limitation, the Wu reference is capable of routing channels.

Wu also describes that from time to time the number of channels routed to an RTU may change by means of a routing policy that includes rules for reacting to events and conditions. Ex. 1005 ¶¶0038-47; ¶0039(…to ensure proper coverage given various conditions…[including] usage, load, weather, events…"); ¶0041("The rules of policy 255 can include one or more criterion representing a trigger …When the criteria are met, matrix switch 250 can take appropriate routing action."). The triggered routing actions include, e.g., "to allocate more channels" to a region "to increase the bandwidth available." ¶0046. The period of time prior to satisfying the triggering criterion is an example of "at a first point in time" as claimed. Ex. 1003 ¶51.

Wu discloses that the RTUs provide "wireless coverage" to cellular regions or cell area. Ex. 1005 ¶¶0030, 0004. It is well understood that "wireless" communications are transmitted using an antenna, and that there are antennas associated with the RTUs for providing the wireless communications. Ex. 1003 ¶52.

Element H: "wherein the host unit is configurable to send digital representations of a second set of downlink channel signals to the first remote unit at a second point in time…"

As explained above, Wu describes a routing policy that includes rules for reacting to events and conditions. Ex. 1005 ¶¶0038-47. The triggered routing actions include, e.g., "to allocate more channels" to a region "to increase the bandwidth available." ¶0046. The time <u>after</u> the matrix switch reacts to a triggering condition to allocate more channels to an RTU to increase the bandwidth available, is "a second point in time" as recited in this limitation. Ex. 1003 ¶53.

Element I: "wherein a number of downlink channel signals in the first set of downlink channel signals is different from a number of downlink channel signals in the second set of downlink channel signals"

Wu's routing policy can trigger the system "to allocate more channels" to a region "to increase the bandwidth available" (Ex. 1005 ¶0046) in response to conditions. This means that the number of channel signals in the first set (prior to triggering event) is different (fewer) than the number of channel signals in the second set (after triggering event), satisfying this limitation. Ex. 1003 ¶54.

Element J: "wherein the host unit is configured to receive digital signals from each of the plurality of remote units"

Wu discloses that the system is bi-directional, meaning the RTUs and send digital representations of uplink signals over the fibers to the units 230. Ex. 1005 ¶¶0036, 0049; Ex. 1003 ¶¶55-57.

Wu discloses that the remote units (RTUs) include analog to digital converters so that the RTUs can digitize signals for digital transport upstream to the host units 230. *See, e.g.*, Ex. 1005 at Fig. 7-2 (RTU "ADC" elements); ¶0056 (for uplink, the RTU "mirrors" functionality of unit 230 in downlink). The functionality of the unit 230 in the downlink that is mirrored by the RTU in the uplink includes creating a digital representation of the signal. *See id.* ¶0049; *see also* Ex. 1003 ¶56. Therefore, in Wu's system the host unit satisfies this limitation.

B. Independent Claim 1

The language of Claim 1 is nearly the same as Claim 10, except claim 1 claims only the host unit, not the remote units. Therefore, Wu discloses the limitations corresponding to Elements B, D1, and E through I of Claim 1 for the same reasons that Wu discloses the corresponding Elements of Claim 10. Ex. 1003 ¶¶58-59. The preamble of claim 1 (Element B) is merely a combination of Elements A and B of claim 10 and is disclosed in Wu for the same reasons as Elements A and B of claim 10.

Claim 1 further recites Element D2 regarding the host having "at least one interface to communicatively couple the host unit to a plurality of remote units, including at least a first remote unit." Units 230 in Wu include an optical interface to communicate with the RTUs which are remote units. Id. ¶60. As shown, for example in Figures 1 and 4 of Wu, the optical interfaces couple the matrix switch to multiple RTUs (including 1st and 2nd RTUs) through units 230. The interface is described by Wu as including the Common Public Radio Interface (CPRI) or an OBSAI interface. Ex. 1005 ¶¶0049, 0050; Ex. 1003 ¶60. The interfaces in units 130 and 230 communicate with the RTUs over fiber optic links 115, 215. *See* Ex. 1005 at Fig. 1, ¶¶0030, 0051; Ex. 1003 ¶¶60-61. For these reasons Wu anticipates Claim 1.

C. Independent Claim 15

Claim 15, Element A, recites a method for providing digital signals in a Distributed Antenna System (DAS). Wu's system discloses a distributed antenna system in which the RTUs are widely distributed antenna units communicating with centralized matrix switch 250 and units 230 to provide wireless coverage at remote locations. Ex. 1005 ¶¶0004-5, ¶0030, Fig. 1, Ex. 1003 ¶62. The combination of matrix switch 250 and units 230 can send digital representations of the downlink channel signals to any of the RTUs. Units 230, for example, include analog-to-digital converters for relaying digitized signals between the BTS 140 and

the RTUs. *See, e.g., id.* ¶¶0030, 0054, Fig. 6-2 ("ADC"); Ex. 1003 ¶¶62-64. Therefore, by disclosing using Wu's system to support wireless services, Wu discloses a method for providing digital signals in a Distributed Antenna System. Ex. 1003 ¶63.

The steps subsequently recited in the method of claim 15 parallel corresponding limitations of claim 10. Therefore, Elements G-I of Claim 15 are disclosed by Wu for the same reasons Elements G-I of Claim 10 are disclosed by Wu. Ex. 1003 ¶64.

D. Dependent Claims 2-6, 16-18

Dependent claims 2-6, and 16-18 recite limitations that the host unit is configurable to dynamically change from sending the first set of carrier channel signals to sending the second set of channel signals. The matrix switch of Wu is configurable using a routing policy 255 that defines rules to automatically change, in response to events and changing conditions as they occur to reroute digitized carrier channel signals to RTUs. Ex. 1005 ¶¶0038-47; ¶0039; ¶0041("When the criteria are met, matrix switch 250 can take appropriate routing action."); Claim 11 "the matrix switch is configured to automatically allocate the carriers channels according to the policy."); ¶0044 ("Processor 253 can be configured to analyze traffic metrics…"); Ex. 1003 ¶66. Because the matrix switch of Wu, is configurable based on a routing policy that defines triggers and conditions for

automatically changing which channels are delivered to an RTUs, Wu anticipates claim 2.

Regarding Claims 3 and 16, Wu discloses that the dynamic change can be based on a change in network conditions. Wu discloses changing the routing based on metrics such as traffic rate, a consumed bandwidth, current traffic load, call rate, and load balancing. See Ex. 1005 ¶¶0041-0044; Ex. 1003 ¶67. Each of these are examples of using a change in a network condition as a basis for triggering a change in the number of carrier channels routed to a RTU. Id.

Regarding Claims 4 and 17, Wu discloses that the dynamic change can be based on load balancing. Ex. 1005 ¶¶0044 ("…analyze traffic metrics…and correlate various metrics with a signature of potential traffic issues, <u>load balancing</u> for example. … switch 250 can route, allocate, or distribute channels as defined by policy 255 <u>to balance load traffic</u>."); ¶¶0011, 0039; Ex. 1005 Claim 12 ("policy includes load balancing rules") Ex. 1003 ¶68.

Regarding Claim 5, Wu discloses that the dynamic change can be based on subscriber need. For example, Wu describes that channels can be distributed in response to government/police requests (¶0046) or based on events such as weather events or disasters that create special needs to support wireless service to aid workers or victims (¶0046). Ex. 1003 ¶69

Regarding claims 6 and 18, Wu discloses that the dynamic change can be based on a schedule. Ex. 1005 ¶0046 ("…allocating channels based on event could be achieved through a scheduled time as would be possible in a sporting event scenario."); ¶0043, Ex. 1003 ¶70.

E. Claim 7

Units 230 in Wu include an optical interface to communicate with the RTUs. *See* Ex. 1005 ¶¶0004, 0030, 0033, 0051, Fig.1 ("Links (Optic Fiber)"); Fig. 6-1 ("E/O O/E Optical Converter"); Fig. 7-1 ("E/O O/E Optical Converter"). Therefore, Wu anticipates this claim. Ex. 1003 ¶71.

F. Claims 8, 11, and 19

Wu discloses that units 130, 230 are configured to packetize the downlink channel signals to the RTUs. Wu discloses this by teaching that the RTUs and the units 230 communicate the digitized downlink signals using either of the protocols provided in the OBSAI standard or the CPRI standard. *See* Ex. 1005 ¶¶0031 (" Suitable standards include…CPRI….OBSAI…"), 0049, 0050; Ex. 1003 ¶72, ¶¶73-92 (explaining CPRI packetizing); ¶¶93-118 (explaining OBSAI packetizing).

Use of the CPRI protocol results in packetizing the digital representations of the downlink carrier signals. Id. ¶¶72-92. CPRI communications are "packetized" because the CPRI standard defines a specific protocol for mapping and framing the IQ payload data into defined CPRI frames for transmission over the CPRI link.

Ex. 1003 ¶¶79-80, 85-86. The basic frames, hyperframes, and 10ms frames of the CPRI standard are each examples of units of data. Ex. 1003 ¶¶79-81. They are well-defined in length and content by the CPRI standard. Id. Because Wu's system is partitioning and organizing the various flows of digital IQ samples into the CPRI framing format for transmission to the RTUs, it is creating units of data to be sent over a network, and, therefore the host unit of Wu is "packetizing" the digital representations as this term is used in the claims of the '178 patent.

Even if a narrower construction of "packetizing" is adopted—which requires some destination information to be included with the packet—the CPRI protocol discloses the use of destination addresses for more complex networked topologies. Ex. 1003 ¶¶82-83, 87-88; Ex. 1006 at p. 84 (6.3.2. and 6.3.3)("address table…used for switching…addresses to all REs").

The OBSAI standard is taught by Wu and defines a protocol based on packetizing communications between a local baseband module and a remote RF module (remote radio unit RRU). Ex. 1007 at p. 24 ("The protocol stack is based on a *packet concept*…"); p. 24 Figure 9 (showing "Address" included in each packet by Application layer and used by transport layer to route messages); pp. 42-44; p. 48 ("The application layer is also responsible for insertion of the message header: address, type, and timestamp fields."); p. 77-78 (Figures 49 and 50); Ex. 1008 at p. 53 ("Addressing Principles"); Ex. 1003 ¶¶102-107, ¶¶115-116. In the

OBSAI standard, the fundamental message structure for communication between the baseband module and the remote radio units is the fixed-length "message" that comprises 3 bytes of header information, including an address followed by 16 bytes of payload. Ex. 1003 ¶¶95-98, ¶99, ¶¶102-107, ¶¶115-118.

Therefore, claims 8, 11, and 19 are anticipated by Wu because Wu teaches to use the OBSAI standard or the CPRI standard between units 130, 230 and the RTUs, both of which standards define protocols that packetize IQ data for transmission to remote RF units from digital baseband units.

G. Claims 9, 20

As just explained, Wu discloses using the CPRI protocol to exchange the downlink digitized signals between the host unit and the RTUs and, therefore, discloses packetizing in compliance with the CPRI standard. *See* Ex. 1005 ¶¶0031, 0049, 0050. Ex. 1003 ¶119.

H. Claim 12

Wu discloses claim 12 because in Figure 1, two RTUs have a direct connection to the lower unit 130 and another RTU has a direct connection to the upper unit 130. Ex. 1003 ¶¶120-121. See also Fig. 4 (showing direct connection).

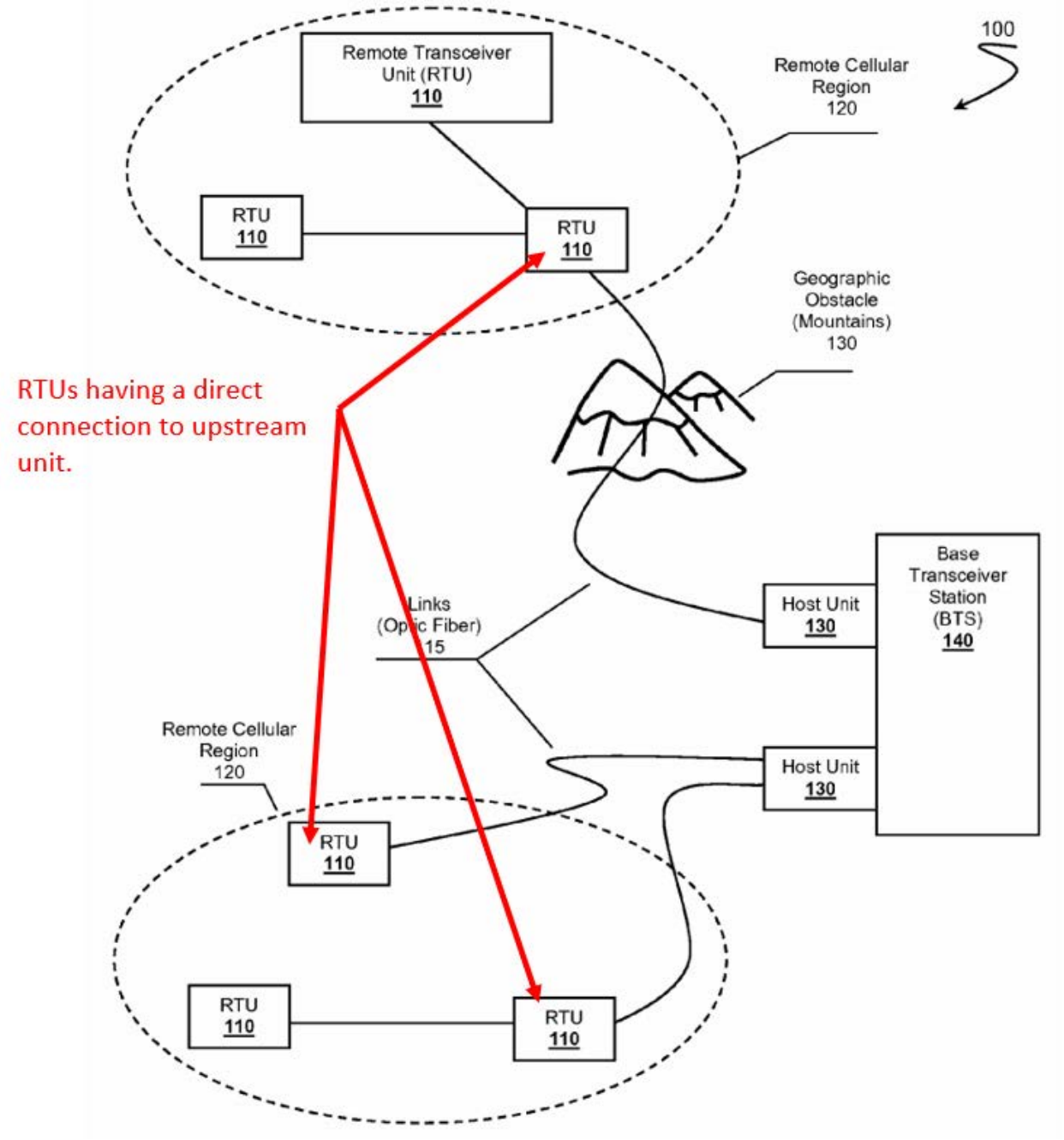
100
Remote Transceiver Unit (RTU) 110
Remote Cellular Region 120
RTU 110
RTU 110
Geographic Obstacle (Mountains) 130
RTUs having a direct connection to upstream unit.
Base Transceiver Station (BTS) 140
Host Unit 130
Links (Optic Fiber) 15
Host Unit 130
Remote Cellular Region 120
RTU 110
RTU 110
RTU 110

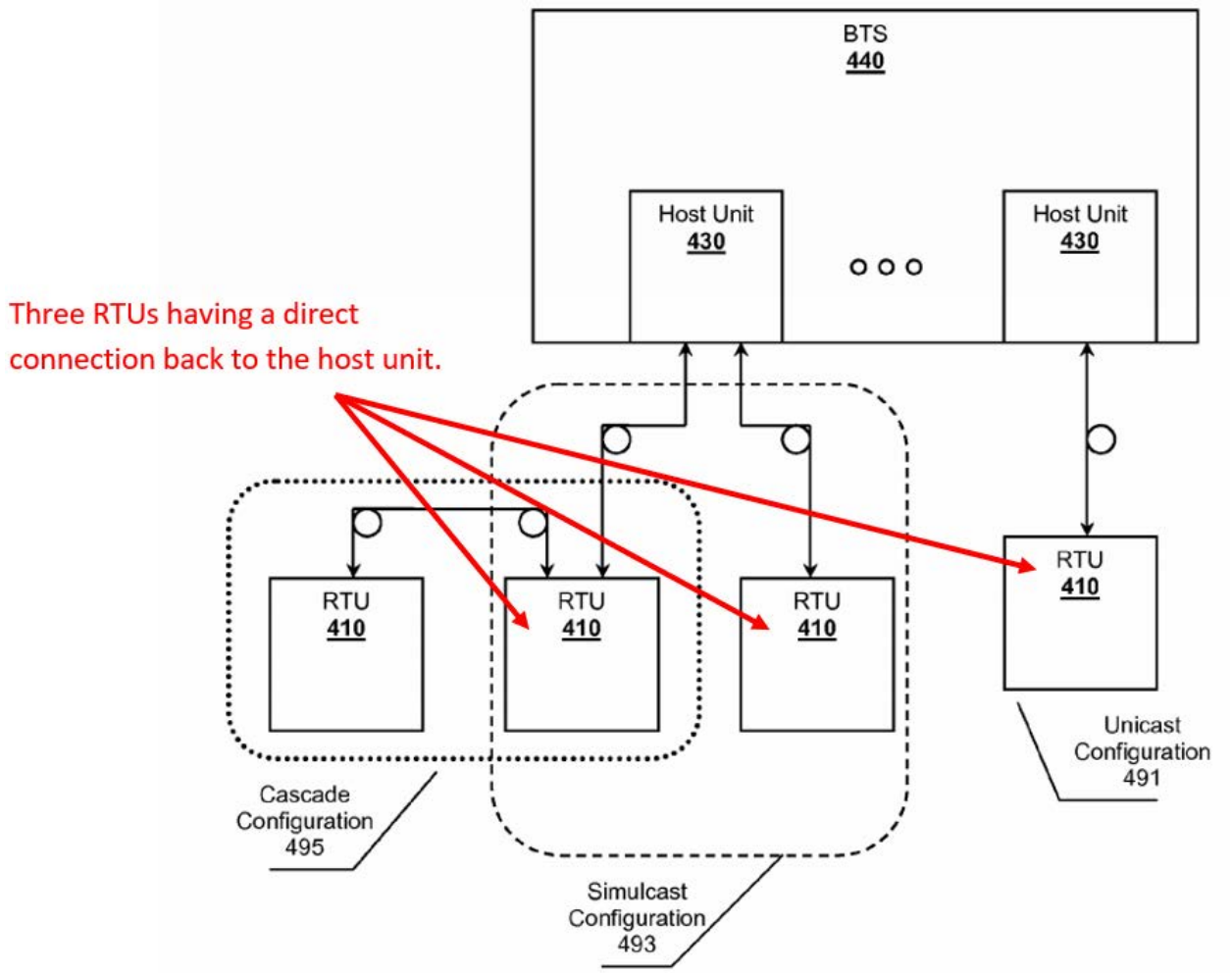

Figure 4

I. Claim 13

Wu discloses that RTUs can be linked to each other so that the host communicates with the more distant RTUs indirectly, i.e., through an indirect connection. Wu calls this configuration a cascade configuration. Ex. 1005 at Fig. 1; Fig. 4 ("cascade configuration"); Fig. 5-1; ¶0012; ¶0051; Ex. 1003 ¶122. Figures 1, 4, and 5-1 illustrate this:

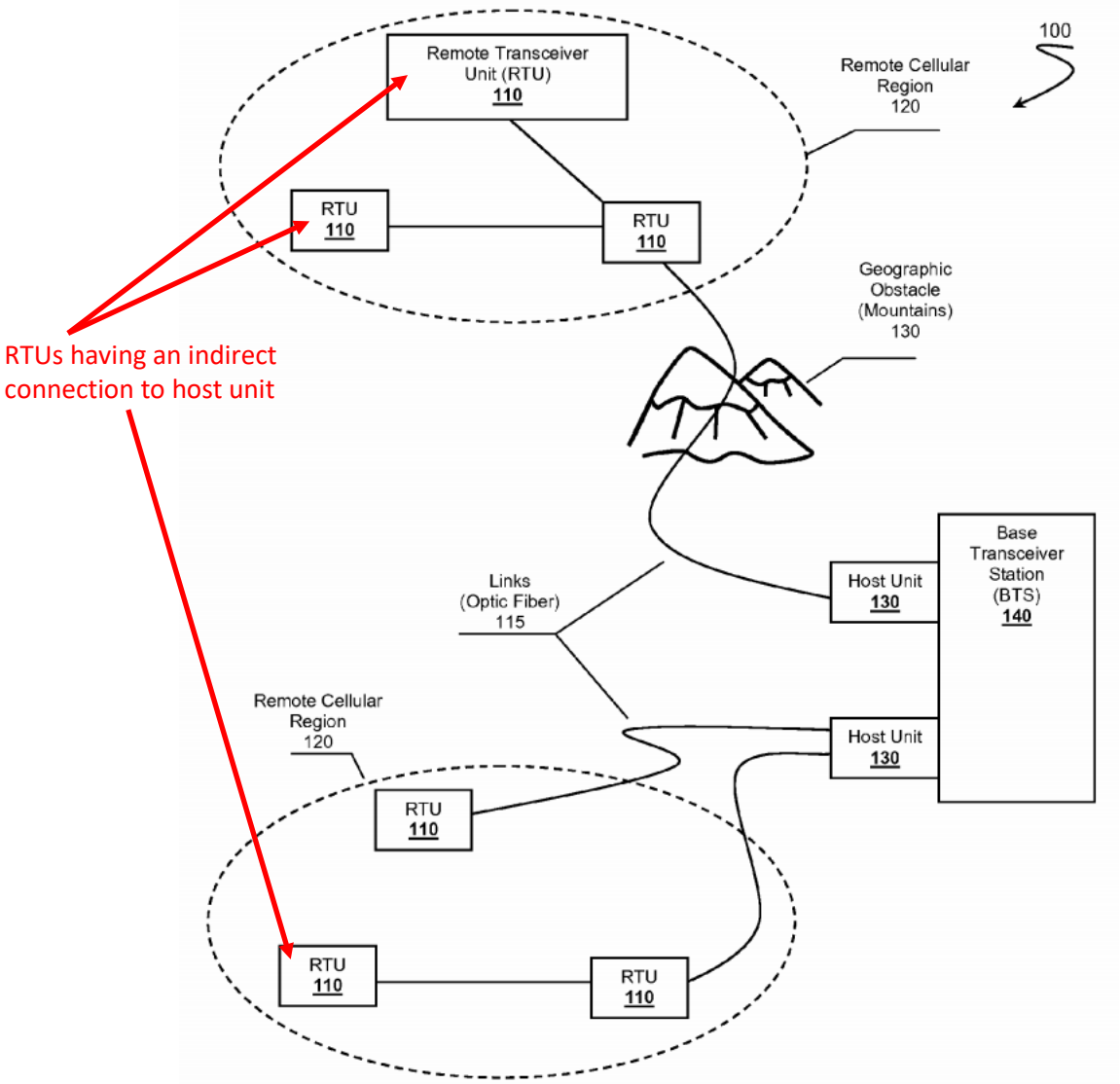

Figure 1

J. Claim 14

Wu discloses that the RTUs can be in a "cascade configuration," which is just another name for a daisy-chain configuration. *See* Ex. 1005 at Fig. 1; Fig. 4 ("cascade configuration"); Fig. 5-1; ¶0012; ¶0051; *see also* Ex. 1003 ¶123.

K. Independent Claim 21

A nearly identical claim of Patent Owner has already been found to be unpatenable by the PTAB in light of Wu. In IPR2018-00571, the PTAB found that Wu's disclosure and its use of CPRI rendered claims 6 of U.S. Patent No. 9,531,473 unpatenable. Ex. 1037 at 34. There are no material differences between claim 21 of the '178 patent and the invalidated claims of the '473 patent that would prevent the same conclusion reached in the first PTAB decision from applying here. *See* Ex. 1003 at ¶34. That claim 21 of the '178 patent refers to including destination information (i.e. an address) identifying the intended remote units whereas invalidated claims of the '473 patent did not expressly include this language is not a basis for a different outcome here because the PTAB construed the term "packetizing" in invalidated dependent claim 9 of the '473 patent to require the inclusion of source or destination information yet still found that the CPRI protocol taught by Wu disclosed packetizing even under this definition. Ex. 1037 at 12, 34 (finding CPRI standard at Section 6.3.2–6.3.3 teaches use of addresses along with frames of IQ data); Ex. 1006 at p. 84).

1. Elements K, L, N, and R of Claim 21

Elements K, L, and N of Claim 21 are taught by Wu for the same reasons that the language of corresponding Elements B, D1, D2 of Claim 1 are taught by

Wu, and Element R of Claim 21 is taught for the same reason as Element J of claim 10. See those elements above. Ex. 1003 ¶¶124-125.

2. Element M of Claim 21

Element M of Claim 21 is taught by Wu for the same reason that Element E of Claims 1 and 10 are taught by Wu. Element M of Claim 21 refers to the additional detail that the downlink signals include multiple carriers. Wu discloses that the matrix switch 250 receives a plurality of band signals from the multi-band transceiver 260 which each include multiple carriers ("carrier channels 270"), shown as channels 1-12 in Figure 2. Ex. 1005 at Fig. 2; ¶0039; ¶0005; ¶0038. *Decl.*. ¶263. Because Wu describes that the signals input to the matrix switch 250 from transceiver 260 include multiple active carrier channels 270, Wu discloses the limitation of Element M that the downlink signal of the plurality of downlink signals comprises a plurality of carriers. Ex. 1003 ¶126.

3. Element O of Claim 21

Element O of Claim 21 is disclosed by Wu. Wu discloses that the combination of matrix switch 250 and units 230 can send digital representations of any carrier of the downlink signals to any of the RTUs. See, e.g., Ex. 1005 ¶0039 ("different carrier channels 270 from different bands 263 can also be treated separately and routed as desired…"). Ex. 1003 ¶127

The goal of Wu's system is to provide fine grained control over individual carrier channels by splitting the carrier channels from their bands and routing the channel signals individually (i.e., on a carrier by carrier basis) or in arbitrary groups to RTUs as desired through a matrix switch according to a routing policy. Ex. 1005 ¶¶0009, 0011, 0038-39, 0047; Ex. 1003 ¶128. Therefore, in paragraph 0049, Wu describes that carrier channels "can be routed or allocated according to policy 255 individually, collectively as shown, or in arbitrary groups." Ex. 1005 ¶0049, *see also* ¶0047; Ex. 1003 ¶128. Wu describes that the matrix switch operates as a splitter and combiner and units 230 include filters to help achieve this routing flexibility. Ex. 1005 ¶0038. The examples in paragraphs 39 and 47 demonstrate that any channel can be split and separately routed to any of the RTUs. Ex. 1003 ¶128. Wu's system, therefore, is configured to route any or all of the carriers received by the system from the multiband signal source 260 to any RTU.

Units 230 include analog-to-digital converters for generating "digital representations" of the carriers for transmission to the RTUs. *See, e.g.*, Ex. 1005 ¶¶0030, 0054, Fig. 6-2 ("ADC"); Ex. 1003 ¶128.

4. Elements P of Claim 21

As explained above, Wu's host unit (the combination of matrix switch 250 and digitizing units 230) includes a routing policy that can route different sets of

digitized carriers to different RTUs. Ex. 1005 ¶¶0047, 0039. In paragraph 0047 Wu provides an example in which a first carrier channel is allocated and routed to a first RTU while a second carrier channel from the same band is allocated and routed to a second RTU. The first carrier channel is a first portion of the plurality of carriers, and the second carrier channel is a second portion of the plurality of carriers as claimed. Ex. 1003 ¶¶129. Wu, therefore, discloses these elements.

5. Element Q of Claim 21

Element Q recites that the digital representations sent to the remotes include destination information identifying the respective remote units. Wu discloses that units 230 use either the CPRI or OBSAI protocols for communicating the digitized carrier channels to the RTUs. As discussed above, both of these standards employ destination addresses for routing signals. The OBSAI standard, for example utilizes a 19 byte message format for communicating with remote RRUs. The first 13 bits of the message defines an address, which includes a node address that identifies a particular RRU (8 bits) and even includes a more specific sub-node address (5 bits) for identifying a particular module within the node. Ex. 1003 ¶130, ¶¶95-98, ¶99, ¶102-107, ¶115-118. The CPRI protocol also discloses the use of destination addresses for more complex networked topologies. Ex. 1003 ¶130, ¶¶82-83, ¶¶87-88; Ex. 1006 at p. 84 (6.3.2. and 6.3.3).

As explained above regarding Element P, Wu also discloses that the first and second portions can be different. In paragraph 0047 Wu provides an example in which a first carrier channel (the first portion) is allocated and routed to a first RTU while a second carrier channel (the second portion) from the same band is allocated and routed to a second RTU. These portions are different because they include different carrier channels. Ex. 1003 ¶131.

L. Dependent Claim 22

Claim 22 recites that the host unit packetizes the downlink signals in compliance with the CPRI standard. Ex. 1005 ¶¶0031, 0049, 0050; Ex. 1003 ¶132. For the same reasons discussed above with respect to Claims 8 and 9, Wu discloses the limitations of claim 22.

M. Dependent Claim 23

Claim 23 recites the destination information is provided in a header. By disclosing the use of the OBSAI and CPRI protocol standards, Wu discloses this limitation. Id. ¶133.

Each OBSAI RP3 "message" includes a 3-byte header that includes an address (the first 13 bits). Ex. 1003 ¶134; Ex. 1007 p. 42. The remainder of the message is payload such as I/Q data. Id. Likewise, each CPRI frame begins with "control words" which are then followed by I and Q data representing carrier signal payload. Ex. 1003 ¶135; Ex. 1006 p. 30, Figure 7, p. 40, Figure 13E, pp. 41-

42 at Figures 14, 15, and 16. The control words at the start of the CPRI frames form a header. They define the first portion of each CPRI frame and contain the CPRI protocol's control information. In these headers, the CPRI protocol identifies specific control words (each is given a number) for carrying specific control signals. The headers include control words designated for "vendor specific" uses. One such use for the "vendor specific" fields in the headers is to include destination addresses, such as Ethernet addresses, as taught by the CPRI standard at p. 84, Sections 6.3.2 and 6.3.3, when networking using CPRI. Ex. 1006 at pp. 42, 84; Ex. 1003 ¶135. Wu therefore discloses including destination information into headers of the CPRI frame packets.

N. Dependent Claim 24

The limitations added by Claim 24 are taught by Wu for the same reasons that claim 7 is taught by Wu. Ex. 1003 ¶136.

O. Dependent Claim 25

Claim 25 recites that the host unit I/Q maps and frames the downlink signals it receives to provide and transport the digital representations. By disclosing the use of the CPRI protocol to transport the digitized carriers, Wu discloses I/Q mapping and framing the carriers because the CPRI standard defines a specific protocol for mapping and framing IQ data into CPRI frames for transport. See, e.g., Ex. 1006 at p. 30, figure 7 ("IQ data block" within "CPRI frame"), p. 32

("4.2.7.2. Mapping of IQ-data"); p. 6 ("User Plane: Data that has to be transferred from the radio base station to the mobile station and vice versa. These data are transferred in the form of IQ data."); Ex. 1003 ¶137. The OBSAI standard, taught by Wu, also discloses that the Baseband unit is configured to I/Q map and frame downlink signals to the RRUs using message transmission rules. Ex. 1003 ¶138.

<u>Ground 2</u>: Claims 1-25 are obvious based on Wu alone or Wu in light of Sabat '426

A. Claims 1-25

Patent Owner may argue Wu's matrix switch 250 and units 230 do not form a host "unit" because they are shown in Figure 2 in different "boxes." As a preliminary point, Figure 4, which shows the units 430 inside a single unit demonstrates that Wu understood the matrix switch 250 and units 230 could be part of the same unit. Figure 1 also suggests that the units 130 are physically attached to the BTS where the matrix switch is located as shown in Figure 2. Ex. 1003 ¶139-143. Regardless, it would have been obvious to place the functionality of both components (matrix switch and units 230) within a single housing or unit. Ex. 1003 ¶139.

"The mere aggregation of a number of old parts or elements which, in the aggregation, perform or produce no new or different function or operation than that theretofore performed or produced by them, is not patentable invention." *Lincoln Engineering Co. v. Stewart-Warner Corp.*, 303 U.S. 545, 549 (1938). In *KSR*, the

Supreme Court stated that when two references "in combination did no more than they would in separate, sequential operation," "it add[s] nothing to the nature and quality of the [device] already patented, and the patent fail[s] under § 103." *KSR*, 550 U.S. at 417; *In re Larson*, 340 F.2d 965, 968 (CCPA 1965) ("[T]he use of a one piece construction instead of the structure disclosed in [the prior art] would be merely a matter of obvious engineering choice.").

The art had already taught to combine into a single hub unit, both (a) a programmable switch for dynamic capacity allocation to remote antenna units and (b) digital interfaces to remote antenna units. See Sabat '426 (Ex. 1040) at Fig. 6, ¶¶0046-47 (programmable switch in hub), ¶0031-32 (hub incorporates interface for digital distribution to the digital remote radios), ¶0037 (digital interfaces to remote units); Ex. 1003 ¶142.

Placing the matrix switch and the units 430 together would merely result in them both performing the same sequence of operations to produce the same predictable result as when separate. Ex. 1003 ¶140. This would have been obvious.

A POSA would have been motivated to do so to reduce the system complexity, reduce installation costs by simplifying installation, and minimize errors in coupling separate components. Ex. 1003 ¶141, ¶143. This argument applies to all of the obviousness grounds herein that rely on Wu.

<u>Ground 3</u>: Claims 8, 11, 19, 21, 23-25 are obvious based on Wu combined with the OBSAI Standard

These claims recite that the host unit is configured either to packetize the downlink signals being sent to the remote units (claims 8, 11, 19), or that the host unit includes destination information with the downlink signals (claims 21, 23-25). Wu expressly teaches to use the OBSAI protocol which inherently relies on creating packets (OBSAI "messages") that include destination addresses. Wu does not regurgitate details of the OBSAI standard. If it is argued for that reason that these claims are not anticipated by Wu, these claims are obvious in light of Wu plus the OBSAI standard (e.g. Exs. 1007, 1008). It would have been obvious to make the combination of Wu plus the OBSAI standard because Wu expressly teaches to use the OBSAI standard and because using a standard protocol can save time and expense of development, eliminates risk from the development process, permits the use of off-the-shelf components, and allows communication with 3rd party equipment. Wu at ¶0031, ¶¶0049-50. Ex. 1003 ¶144.

<u>Ground 4</u>: Claims 8-9, 11, 19-25 are obvious based on Wu combined with the CPRI standard

These claims recite that the host unit is configured either to packetize the downlink signals being sent to the remote units (claims 8-9, 11, 19, 20, 22), or that the host unit includes destination information with the downlink signals (claims 21-25). As addressed above, Wu expressly teaches to use the CPRI protocol which

packetizes with addresses for networking configurations. If it is argued that Wu does not anticipate because Wu does not re-state these details of the CPRI standard, these claims are obvious in light of Wu plus the CPRI standard. It would have been obvious to use CPRI with Wu because Wu expressly teaches to use the CPRI standard and for the reasons given above with respect to using the OBSAI standard. Ex. 1005 at ¶0031, ¶¶0049-50. Ex. 1003 ¶145. Further, one would be motivated to use CPRI's teaching of addresses because Wu describes a network configuration in which CPRI teaches to use addresses (tree and chain configurations in Figure 1) See Ex. 1006 at 83-85 (Networking "to support…chain, ring, or tree topologies."), p. 12 Figure 5B illustrating Tree Topology); Ex. 1003 ¶160.

Ground 5: Wu plus Sabat '552 renders Claims 26-30 obvious

A. Independent Claim 26

As discussed below, the ability to network together an additional host unit to allow routing of signals between the host units was already known and disclosed in multiple prior references such as the Sabat '552 patent.

1. Elements T, U, V, Y, Z, AA, and BB of Claim 26

Element T of Claim 26 is taught by or obvious in light of Wu for the same reasons that Elements A and B of Claim 10 are taught or obvious in light of Wu as discussed under Grounds 1-2. Ex. 1003 ¶¶146-147.

Element U of claim 26 overlaps with Element D1 of Claim 10. Id. ¶148.

Element V of claim 26 overlaps with Element M of Claim 21. Id. ¶149.

Element Y of claim 26 overlaps with Element D2 of Claim 1. Id. ¶150.

Element Z of Claim 26 overlaps with Element O of Claim 21. Id. ¶151. Therefore, these elements are disclosed by Wu for the same reasons discussed for their overlapping elements.

Elements AA and BB of Claim 26 are taught by Wu for the same reasons that Element P of claim 21 is taught by Wu, and because, as discussed above, Wu provides specific examples in paragraph 0047 in which a first carrier channel is routed to a first RTU while a different carrier channel is routed to a second RTU. Ex. 1003 ¶152. Therefore, the portion routed to the first remote unit is "different than" the portion routed to the second remote unit. Id.

Element CC of Claim 26 is taught by Wu for the same reasons that Element R of Claim 21 and Element J of Claim 10 is taught by Wu. Id. ¶153.

2. Elements W and X of Claim 26

Wu does not disclose that the matrix switch/unit 230 could be coupled to another matrix switch/unit 230. In the same art, however, Sabat '552 disclosed that hubs (35) in a digital wireless RF distribution system can be coupled to other hubs through digital cross connects 37 so that a base station connected at one hub site can have its signal digitized and transmitted to any of the remote units coupled

to any of the other connected hubs in the system. Ex. 1011 at Fig. 1 (below, highlighted), Fig. 3; 6:55-61; Ex. 1003 ¶154. Figure 1 of Sabat '552, shows hub 35 at left can route signals from its base stations 20 not only to its own remote RAN sites but also to the RAN sites of two additional hubs by virtue of being communicatively coupled to the additional hubs via digital cross-connection.

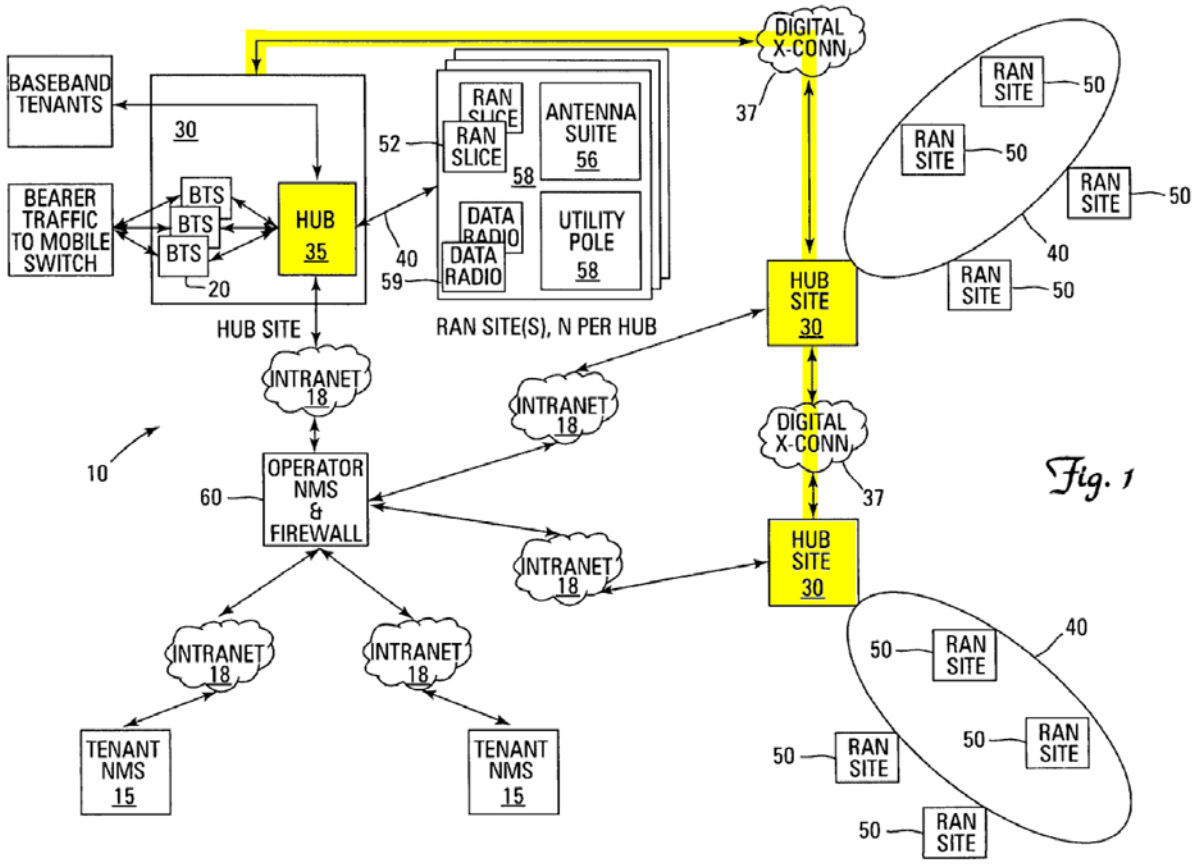

Sabat '552 identifies advantages resulting from interconnecting multiple hubs 35. which would have motivated an artisan to modify Wu's teaching to couple a first matrix switch/unit 230 with a second matrix switch/unit 230. Ex. 1003 ¶155. Sabat '552 teaches that interconnecting the hubs 35 enables a base station (20)

located at one hub site (30) to transmit its associated signal to "any" RAN Unit 50, meaning not only any remote antenna unit directly connected to its hub 35, but also to any remote unit site coupled indirectly through another hub 35, which avoids the cost of building additional base stations and distribution networks. Ex. 1003 ¶155. Sabat '552 also teaches that its design enables the system including the RAN units to be easily shared among service providers, reducing costs. Ex. 1011 2:48-58; 3:65-4:5; Ex. 1003 ¶155. Therefore, it would have been obvious to couple Wu's matrix switch/unit 230 with another matrix switch/unit 230 to allow signals input to the first matrix switch to be communicated to RTUs that connect with a different matrix switch to equipment costs and to share infrastructure among service providers. Id. ¶156.

B. Claim 27

The interconnection between the hubs in Sabat '552 comprised an optical interface, e.g., SONET, to transport the digital signals between components, including between the coupled hubs 35. Ex. 1011 col. 3:8-21 ("transport medium may be an optical fiber …"); 6:55-61; Ex. 1003 ¶157. Therefore, Claim 27 is obvious based on the combination of Wu with Sabat '552.

C. Claim 28

Sabat '552 discloses that a hub in a distributed antenna network can be interconnected to additional hubs and it also shows that that those additional hubs

can be connected to still further hubs. In Fig. 1 of Sabat '522, Hub A is communicatively coupled directly to Hub B (by cross-connection 37) and indirectly to Hub C through Hub B. Hub A's connection to Hub C is indirect because it passes through intervening Hub B. Ex. 1003 ¶158.

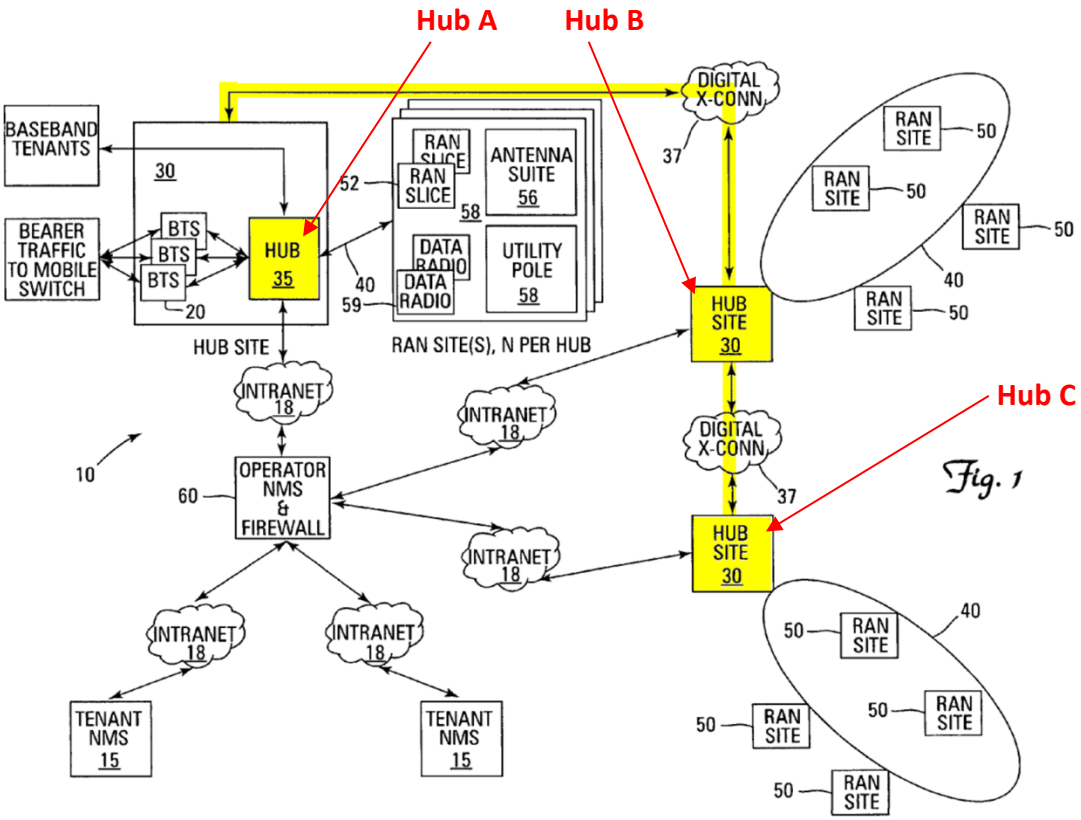

A POSA would be motivated to make this arrangement for the same reasons one would make the combination discussed for Claim 26. This allows one BTS to distribute its signals to additional RAN sites. Therefore, the combination of Wu and Sabat '552 renders claim 28 obvious. Ex. 1003 ¶159.

D. Claim 29

Wu discloses that the matrix switch can be coupled to more than one multi-band transceiver 260, which are signal sources. Ex. 1005 ¶0034 ("BTS 240 can be coupled to more than one of multi-band transceiver 260…"). Coupling the matrix switch to multiple transceivers 260 requires a plurality of interfaces to achieve this coupling. Ex. 1003 ¶160. In addition, Sabat '522 discloses that the hub units include multiple interfaces to communicatively couple hub 35 to multiple base stations. Ex. 1011 5:31-34. In Figure 1 of Sabat '552, the hub 35 interfaces to three base stations. Ex. 1003 ¶160. Therefore, for the reasons provided above with respect to claim 26, the combination of Wu plus Sabat '552 renders claim 29 obvious.

E. Claim 30

Claim 30 is taught by Wu for the same reasons that Element Q of Claim 21 and Claim 23 is taught by Wu. Ex. 1003 ¶161.

<u>Ground 6</u>: Oh anticipates Claims 1-8, 10-11, 13, 15-19, 21, 23-24

A. <u>Independent Claim 10</u>

Oh (Ex. 1023) anticipates Claim 10. Ex. 1003 ¶¶168-260. Oh's figures show many of the elements:

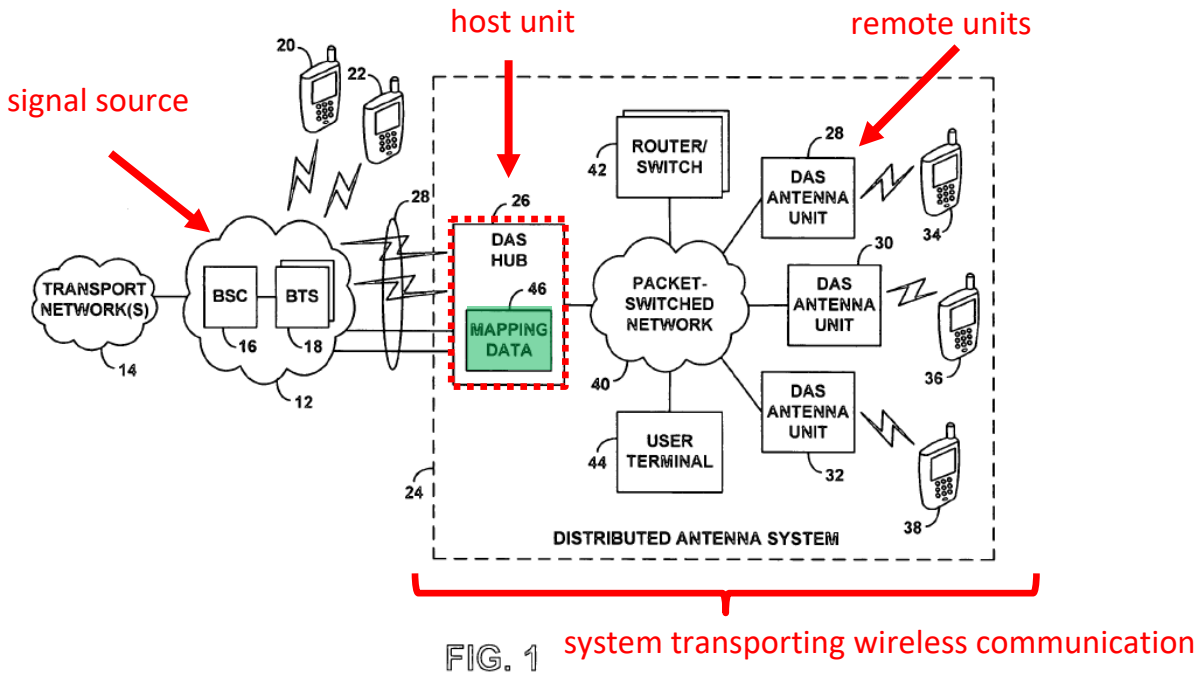

FIG. 1

Signal source interface (50)
Remote interface (52)

Mapping data (46) for a plurality of downlink channel signals (A, B, C)

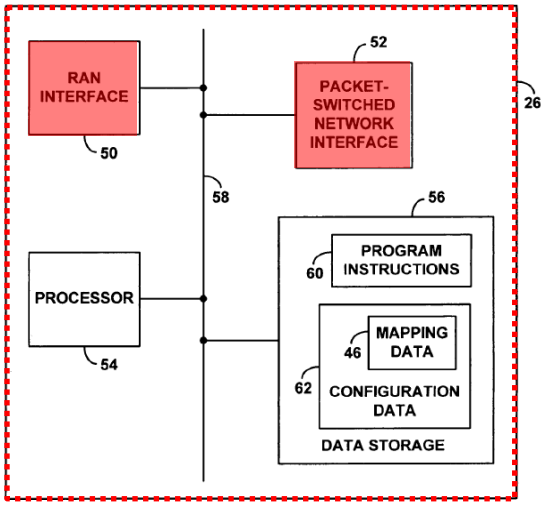

FIG. 3

DAS MAPPING DATA	
RAN COVERAGE SEGMENT(S)	DAS ANTENNA UNIT IP ADDRESS(ES)
A	xxx.xxx.xxx.1, xxx.xxx.xxx.2, xxx.xxx.xxx.3, xxx.xxx.xxx.6
B	xxx.xxx.xxx.5
C	xxx.xxx.xxx.4

FIG. 2

Element A: "A system for transporting wireless communications…"

Oh's discloses a "distributed antenna system (DAS)" (24), which discloses the preamble. Ex. 1023 at 4:65-5:5; Fig. 1 (element 24); Ex. 1003 ¶¶172-76. DAS transport wireless communications. Ex. 1003 ¶173; Ex. 1023 at 5:57-64 ("communication with wireless client devices").

Element B: "a host unit"

Oh's DAS includes a "DAS hub" (26), which is a host unit. Ex. 1023 at 5:1-3, Fig. 1; Ex. 1003 ¶¶177-80; see also Ex. 1023 at 7:35-53; 8:25-31.

Element C: "a plurality of remote units, including at least a first remote unit and a second remote unit."

Oh's DAS "includes a plurality of DAS remote antenna units" (28, 30, 32), which discloses this element. Ex. 1023 at 5:57-6:5; Fig. 1; Ex. 1003 ¶¶181-84.

Element D1: "wherein the host unit comprises at least one interface to communicatively couple the host unit to at least one signal source…"

Oh's DAS hub comprises a "RAN interface" (50), which discloses this element. Ex. 1023 at 10:18-19; Fig. 3; Ex. 1003 ¶¶185-96. RAN interface "facilitate[s] communication with RAN 12 on one or more RAN coverage segments." Ex. 1023 at 10:18-19, Fig. 3. RAN stands for "radio access network" and includes "one or more BTSs" (18) (i.e., base stations). Ex. 1023 at 4:33-46; Fig 1.

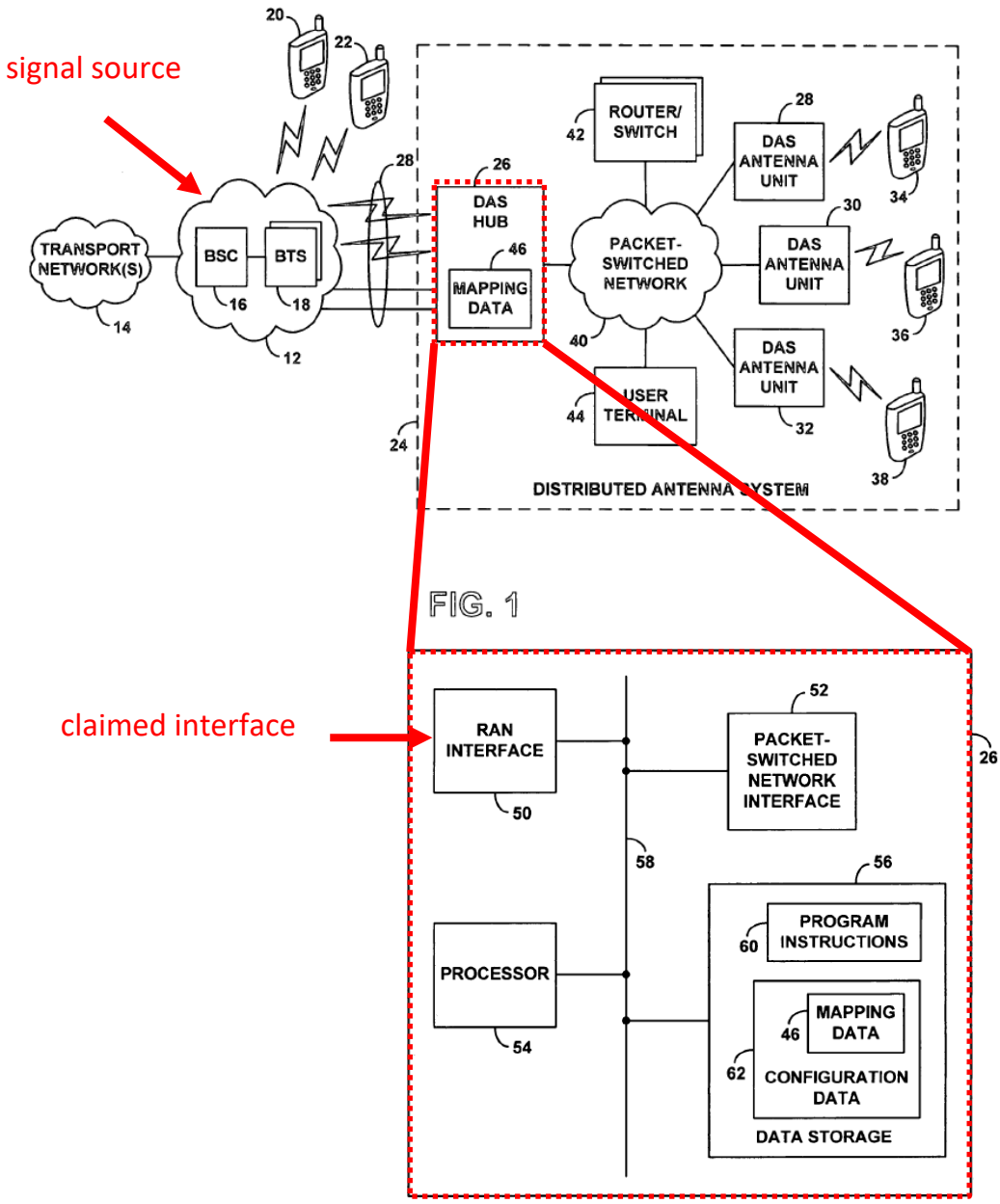

FIG. 3

Ex. 1023 at Figs. 1, 3.

Element E: "wherein the host unit is configured to receive a plurality of downlink channel signals from the at least one signal source"

Oh's DAS hub receives signals for *plural* "one or more RAN coverage segments" from the RAN, which discloses this element. Ex. 1023 at 10:18-29; see also id. at 2:50-53; 4:47-50, 8:1-11; Ex. 1003 ¶¶194-202. A "RAN coverage segment" is the "mechanism in or through which the RAN communicates with client devices that it serves." Ex. 1023 at 4:47-50; 4:50-64.

Oh teaches that the "RAN coverage segments" can correspond to a "downlink channel signal." Oh specifically teaches the RAN coverage segment could be "cell or sector operating on a *respective RF frequency channel*." Ex. 1023 at 3:2-5; see also 4:57-63 ("1.25 MHZ *channel*"); Ex. 1023 ¶195.

Figure 2 shows the DAS hub configured to receive a plurality of RAN coverage segments (A, B, C):

Plurality of RAN coverage segments

DAS MAPPING DATA	
RAN COVERAGE SEGMENT(S)	DAS ANTENNA UNIT IP ADDRESS(ES)
A	xxx.xxx.xxx.1, xxx.xxx.xxx.2, xxx.xxx.xxx.3, xxx.xxx.xxx.6
B	xxx.xxx.xxx.5
C	xxx.xxx.xxx.4

FIG. 2

Ex. 1023 at Fig. 2, 9:11-43; 7:37-42. Oh teaches the RAN coverage segments (A,B,C) in the mapping data "can be defined in any of the ways noted above," where ones of those "ways" is "respective RF frequency channel" as noted above. Ex. 1023 at 9:7-11. Thus, a Oh teaches the plural RAN coverage segments A, B, C could represent three downlink channel signals:

RF frequency channel operating on frequency A

RF frequency channel operating on frequency B

RF frequency channel operating on frequency C

DAS MAPPING DATA	
RAN COVERAGE SEGMENT(S)	DAS ANTENNA UNIT IP ADDRESS(ES)
A	xxx.xxx.xxx.1, xxx.xxx.xxx.2, xxx.xxx.xxx.3, xxx.xxx.xxx.6
B	xxx.xxx.xxx.5
C	xxx.xxx.xxx.4

FIG. 2

Ex. 1003 ¶199.

To the extent Patent Owner argues this element requires the signals have a certain granularity, Oh discloses the same granularity taught in the '178 patent (a particular carrier frequency). Ex. 1003 ¶¶200-01. Oh emphasizes its system works with a variety of types and granularities of RAN coverage segments. Ex. 1023 at 2:64-3:5; 4:50-64 (teaching a "sector," "combination," "portion," "particular carrier frequency").

To the extent Patent Owner argues this element requires the signals be composite signal, that is wrong. The term "composite" is not in the claim. Regardless, Oh discloses its RAN coverage segments can be composite signals. Oh first teaches that a RAN coverage segment could be "cell or sector operating on a respective RF frequency channel." Ex. 1023 at 3:1-5. Oh *further* teaches the

RAN coverage segment could be a "a *combination of sectors* or other coverage areas." Id. In such a "combination," the RAN coverage segment signal a "combination" of RF frequency channels, i.e., a composite signal with a plurality of RF frequency channels.

Element F: "wherein the host unit is configured to send digital representations of the plurality of downlink channel signals to the plurality of remote unit"

Oh discloses this element via its teachings that the DAS hub (24) is configured to send the signals from the RAN coverage segments to the DAS antenna units via "IP packets." Ex. 1023 at 8:6-11; Ex. 1003 ¶¶203-10. The "IP packets" correspond to the recited "digital representations."

Oh teaches that the DAS hub will (a) "convert" the incoming traffic from a RAN coverage segment to a "digitized bit stream," (b) "packetize" the result into a "sequence of IP packets," and (c) "transmit" the packets to the DAS antenna units, which discloses this element. Ex. 1023 at 8:1-16; see also 10:30-36.

Element G: "wherein the host unit is configurable to send digital representations of a first set of downlink channel signals to the first remote unit at a first point in time, the first set of downlink channel signals for transmission at an antenna of the first remote unit"

The DAS hub in Oh is configurable as recited in this element via the "mapping data" (46) in the DAS hub. Ex. 1023 at 7:35-53; 8:1-16, 8:47-9:43, Figs. 1-3; Ex. 1003 ¶¶211-37. DAS hub (46) includes "mapping data":

DAS MAPPING DATA	
RAN COVERAGE SEGMENT(S)	DAS ANTENNA UNIT IP ADDRESS(ES)
A	xxx.xxx.xxx.1, xxx.xxx.xxx.2, xxx.xxx.xxx.3, xxx.xxx.xxx.6
B	xxx.xxx.xxx.5
C	xxx.xxx.xxx.4

FIG. 2

Ex. 1023 at Fig. 2, 8:47-51. The mapping data "correlate[s]" the RAN coverages segments to specific DAS antenna units via the "IP address" of the DAS antenna units. Ex. 1023 at 7:37-42. These correlations define how the DAS hub should "distribute capacity." Ex. 1023 at 7:37-42.

Oh disclose each part of this element.

Regarding "the host unit is configurable," Oh teaches the mapping data in the DAS hub is "configurable." Ex. 1023 at 9:44-46. ("…allowing mapping data 46 to be *configured* and modified . . ."); Ex. 1003 ¶218.

Regarding host unit "send digital representations," Oh teaches that the DAS hub uses this mapping data to "transmit" the correct RAN coverage segments to the correct DAS antenna unit using "IP packets." Ex. 1023 at 8:1-11 ("[W]hen the DAS hub 26 receives incoming traffic in the given RAN coverage segment, the

DAS hub 26 *may refer to the mapping data* … DAS hub 26 may then convert the incoming traffic to a digitized bit stream … transmit those IP packets via network 40 to each one of the two corresponding DAS antenna unit IP addresses."); see also id. at 7:42-53, 10:62-67.

Regarding sending "a first set of downlink channel signals to the first remote unit at a first point in time," the correlations contained in the mapping data corresponds sets of downlink channel signals. Ex. 1003 ¶231. Oh teaches that the mapping data is flexible and can correlate any "one or more RAN coverage segments" with any one or more DAS antenna unit. Ex. 1023 at 7:36-42; Ex. 1003 ¶¶219-27. Figure 2 shows this limitation:

DAS MAPPING DATA	
RAN COVERAGE SEGMENT(S)	DAS ANTENNA UNIT IP ADDRESS(ES)
A	xxx.xxx.xxx.1, xxx.xxx.xxx.2, xxx.xxx.xxx.3, xxx.xxx.xxx.6
first set (B) B	xxx.xxx.xxx.5 (i.e., first remote unit)
C	xxx.xxx.xxx.4

FIG. 2

Ex. 1023 at Fig. 2. Each of RAN coverage segments A, B, C corresponds to a different set of set of downlink channel signals. Ex. 1003 ¶¶235-36. The DAS hub is configured to send incoming signal in RAN coverage segment B (i.e., RF frequency channel B) to the specific DAS antenna unit with IP address xxx.xxx.xxx.5. Ex. 1023 at 9:12-20.

Regarding "for transmission at an antenna of the first remote unit," Oh teaches the IP packets are sent to antenna units which "emit" them via an "antenna." Ex. 1023 at 8:10-17.

Element H of Claim 10: "wherein the host unit is configurable to send digital representations of a second set of downlink channel signals to the first remote unit at a second point in time…"

Oh discloses this element via its additional teachings that the mapping data (46) in the DAS hub may be "changed whenever desired" and then used for "*subsequently* routing communication." Ex. 1003 ¶¶238-49. Oh emphasize this feature:

> *Advantageously*…alter the mapping data *whenever desired*, to conveniently *change the RAN-DAS correlations*, so as to distribute RAN coverage in a desired manner among the DAS antenna units.

Ex. 1023 at 2:45-49.

> *Preferably*, the mapping data maintained in the DAS data storage will be alterable, so as to allow an administrator or automated system to *modify the correlations between RAN coverage segments and DAS*

> *antenna unit IP addresses*. … DAS hub may provide a web based user-interface through which an administrator can view and edit the mapping data. In this way, the mapping data can be *changed whenever desired*, so as to distribute coverage of the RAN in a desired manner throughout the DAS.

Id. at 3:26-26;

> In a *preferred* embodiment, … mapping data 46 [can] be configured and modified by a system administrator, or perhaps dynamically by an automated system (based on real-time load measurements, event-scheduling data, or one or more other parameters). By allowing mapping data 46 to be *changed when desired*, it becomes possible to readily *alter correlations between RAN coverage segments and DAS antenna unit IP addresses*, so as to alter distribution of RAN coverage among the various DAS antenna units.

Id. at 9:44-64.

Oh teaches the DAS hub includes an "interface" through which the mapping data can be edited. Id. at 9:59-64; 3:30-36. The mapping data may be edited "to add" or "to remove" one or more correlations. Id. at 10:4-9. The DAS hub "store[s] the changed mapping in data for use in subsequently routing communication traffic between RAN coverage segments and DAS antenna unit IP addresses." Id. at 9:59-64

These teachings disclose each part of this element.

The teaching disclose that the DAS hub is "configurable." The DAS hub has an interface that allows the mapping data to be "configured" and "changed." Ex. 1003 ¶¶242-45.

The teaching disclose that the DAS hub can send a "second set of downlink channel signals" at a "second point in time." Recall that the correlations in the mapping data define the set of downlink channel signals. See prior Element G; Ex. 1003 ¶231. By teaching these correlations may be "changed whenever desired" and then used for "*subsequently* routing communication traffic between RAN coverage segments and DAS antenna unit IP addresses," Oh teaches DAS hub can send a "second set of downlink channel signals" at a "second point in time." Ex. 1003 ¶¶246-47.[2]

Here is an illustration of applying Oh's teaching. The (a) left figure shows Figure 2 and (b) right figure shows Figure 2 after the mapping data is edited "to add" a correlation (blue arrow):

[2] The second set is sent via a "digital representation" and "for transmission at the antenna" for the same reasons discussed in the prior element, i.e., each set (whether first or second) is sent via "*IP* packets" for the DAS *antenna* unit to "*emit*." See Element G.

Original (first point in time)

DAS MAPPING DATA	
RAN COVERAGE SEGMENT(S)	DAS ANTENNA UNIT IP ADDRESS(ES)
A	xxx.xxx.xxx.1, xxx.xxx.xxx.2, xxx.xxx.xxx.3, xxx.xxx.xxx.6
B	xxx.xxx.xxx.5
C	xxx.xxx.xxx.4

First Set (B)

Edited (second point in time)

DAS MAPPING DATA	
RAN COVERAGE SEGMENT(S)	DAS ANTENNA UNIT IP ADDRESS(ES)
A	xxx.xxx.xxx.1, xxx.xxx.xxx.2, xxx.xxx.xxx.3, xxx.xxx.xxx.6
B	xxx.xxx.xxx.5
C	xxx.xxx.xxx.4 xxx.xxx.xxx.5

Second Set (B + C)

Ex. 1003 ¶248. Before the addition, the DAS hub was configured to only send incoming signal in RAN coverage segment B (the first set) to the underlined DAS antenna unit. Id. After the addition, the DAS hub is configured to send incoming signal in RAN coverage segment B and C (the second set) to that same DAS antenna unit. Id. Figure 5 illustrates this:

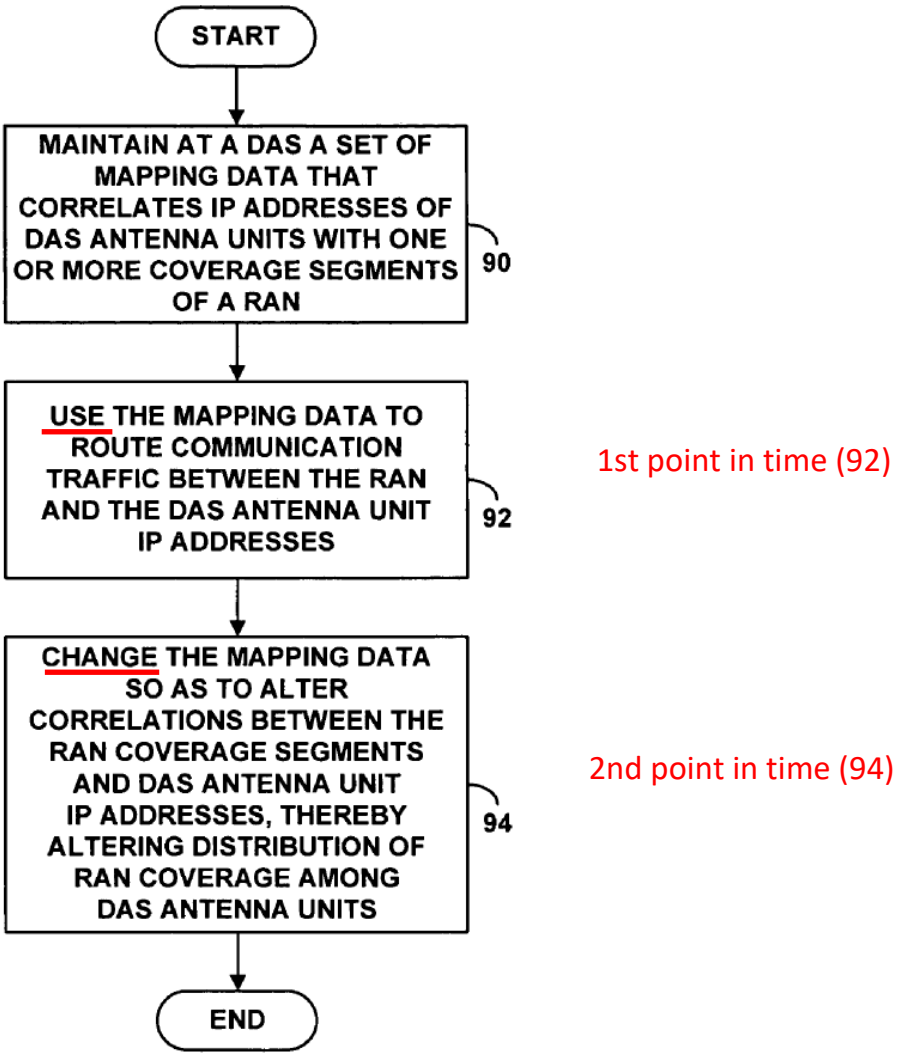

FIG. 5

Ex. 1023 at Fig. 5.

Element I of Claim 10: "wherein a number of downlink channel signals in the first set of downlink channel signals is different from a number of downlink channel signals in the second set of downlink channel signals"

Oh has two teaching about the mapping data that discloses this element. Ex. 1003 ¶¶250-56.

First, Oh teaches that the mapping data may be changed "to add" or "to remove" a correlation. Ex. 1023 at 10:4-9, 3:45-60. When a correlation is added/removed for a DAS antenna unit, that means a RAN coverage segment is added or removed for that DAS antenna unit—i.e., the DAS antenna unit is correlated with a different number of RAN coverage segments. Ex. 1023 at 10:4-9, 3:45-60; Ex. 1003 ¶253. Here is the illustration again:

DAS MAPPING DATA	
RAN COVERAGE SEGMENT(S)	DAS ANTENNA UNIT IP ADDRESS(ES)
A	xxx.xxx.xxx.1, xxx.xxx.xxx.2, xxx.xxx.xxx.3, xxx.xxx.xxx.6
B	xxx.xxx.xxx.5
C	xxx.xxx.xxx.4

DAS MAPPING DATA	
RAN COVERAGE SEGMENT(S)	DAS ANTENNA UNIT IP ADDRESS(ES)
A	xxx.xxx.xxx.1, xxx.xxx.xxx.2, xxx.xxx.xxx.3, xxx.xxx.xxx.6
B	xxx.xxx.xxx.5
C	xxx.xxx.xxx.4 xxx.xxx.xxx.5

Ex. 1003 ¶253. The first set (left) has **one** RAN coverage segment; the second set (right) has **two** RAN coverage segments (B&C).

Second, Oh teaches that a DAS antenna unit may be correlated with "one or more" RAN coverage segments. Ex. 1023 at 7:37-42. This confirms the "number" of RAN coverage segments is flexible (i.e., can be different). The mapping data may correlate a DAS antenna unit with (a) "one" RAN coverage segment and (b) "more" than one RAN coverage segment subsequently. Ex. 1003 ¶87.

Element J of Claim 10: "wherein the host unit is configured to receive digital signals from each of the plurality of remote units"

Oh teaches the DAS hub receives "IP packets" containing a "digitized bit stream" from each of the DAS antenna units, which discloses this element. Ex. 1023 at 8:17-31 ("upon *receipt* of those IP packets"); Ex. 1003 ¶¶257-60.

B. <u>Independent Claim 1</u>

Claim 1 is nearly identical to Claim 10. See Ex. 1003 ¶261 (chart showing this). Claim 1 only adds one element not recited in Claim 10 (Element D2). It specifies there is another "interface," specifically, "at least one interface to communicatively couple the host unit to a plurality of remote units, including at least a first remote unit." Oh teaches that the DAS hub includes a "packet-switched network *interface*" (52) for communication with the DAS antenna units, which discloses this element. Ex. 1023 at 10:30-36, 6:33-38; Ex. 1003 ¶¶263-68:

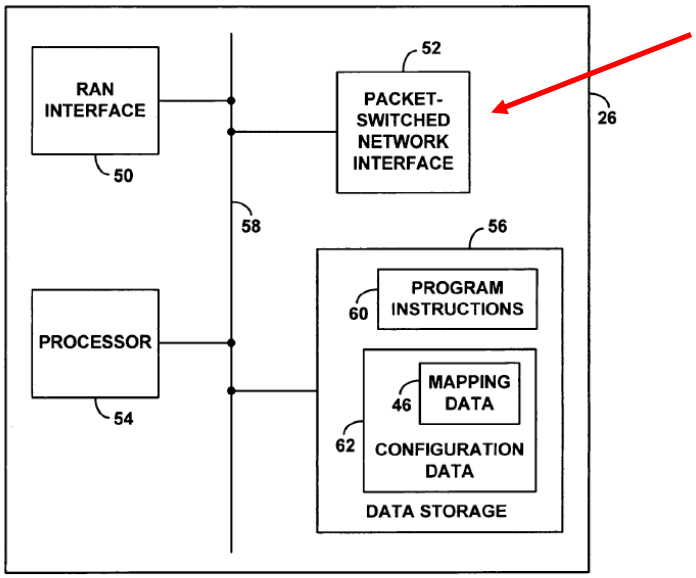

FIG. 3

Ex. 1023 at Fig. 3.

All the other elements of Claim 1 overlap with Claim 10 (specifically, Elements B, D1, E, F, G, H, I). See Ex. 1003 ¶261 (chart showing this). Oh discloses these elements for the same reasons shown above for Claim 10. Ex. 1003 ¶262. Therefore, Oh anticipates Claim 1. Id. ¶¶262-268.

C. <u>Independent Claim 15</u>

Claim 15 also overlaps with Claim 10. Ex. 1003 ¶269 (chart showing this). Essentially, Claim 15 only adds that it is a "method" claim. Id. ¶269-70. It specifies: "A method for providing digital signals in a Distributed Antenna System (DAS)." Oh discloses this where it teaches "embodiment of the invention may take the form of a *method* that involves maintaining and using mapping-data in a

DAS." Ex. 1023 at 3:37-39, Fig. 5 (showing the method); Ex. 1003 ¶270-71. All the other elements of Claim 15 overlap with Claim 10 (specifically, Elements G, H, I). See Ex. 1003 ¶269 (chart showing this). Oh discloses these elements for the same reasons shown above for Claim 10. Ex. 1003 ¶272. Therefore, Oh anticipates Claim 15. Id. ¶¶269-273.

D. <u>Independent Claim 21</u>

Claim 21 overlaps with Claim 1, 10, 15. It, however, no longer refers to sending different sets of channel signals to the same remote unit. Instead, Claim 21 refers to the host unit sending a two different portions of carriers to two different remote units. Oh anticipates this claim. Id. ¶¶274-338.

<u>Element K:</u> "A host unit …"

Oh's DAS includes a "DAS hub" (26), which is a host unit. Ex. 1023 at 5:1-3, Fig. 1; Ex. 1003 ¶¶275-81; see also Ex. 1023 at 7:35-53; 8:25-31.

<u>Element L:</u> "at least one interface to communicatively couple the host unit to at least one signal source"

This element overlaps with Element D1 Claim 10 and is disclosed for the same reasons. See also Ex. 1003 ¶¶282-91.

<u>Element M:</u> "wherein the host unit is configured to receive a plurality of downlink signals from the at least one signal source, each downlink signal of the plurality of downlink signals comprising a plurality of carriers"

First, Oh's teaches that the DAS hub receives a plurality of downlink signal. Oh's DAS hub receives signals for *plural* "one or more RAN coverage segments" from the RAN. Ex. 1023 at 10:18-29; 2:50-53; 3:6-13; 4:47-50; Ex. 1003 ¶¶292-30. Each "RAN coverage segments" corresponds to a "downlink signal." Ex. 1023 at 2:64-3:5; 4:50-64; Ex. 1003 ¶293. Oh teaches a specific example with plural RAN coverage segments:

plurality of RAN coverage segments

DAS MAPPING DATA	
RAN COVERAGE SEGMENT(S)	DAS ANTENNA UNIT IP ADDRESS(ES)
A	xxx.xxx.xxx.1, xxx.xxx.xxx.2, xxx.xxx.xxx.3, xxx.xxx.xxx.6
B	xxx.xxx.xxx.5
C	xxx.xxx.xxx.4

FIG. 2

Ex. 1023 at Fig. 2, 9:11-43; 7:37-42.

Second, Oh further teaches each of the RAN coverage segment (the downlink signals) can comprise a plurality of carriers." Ex. 1003 ¶294-97. Oh

teaches that a RAN coverage segment may be a "cell sector" operating on a "particular *carrier*-frequency." Ex. 1023 at 9:8-11. Then, Oh further teaches a RAN coverage segment may be a "combination" of "sectors." Id. at 3:4-5. In such a combination, each RAN coverage segment would correspond to a composite downlink signal with a plurality of RF carrier frequencies. Ex. 1003 ¶¶295, 97.[3] This is consistent with Oh's teaching that its system works with a variety of types and granularities of RAN coverage segments. Ex. 1023 at 2:64-3:5; 4:50-64 (teaching: a "sector," "combination," "portion," "particular carrier frequency").

Thus, a POSA understands Oh teaches the plural RAN coverage segments A, B, C could correspond to three downlink signals where each signal comprises a plurality of carriers:

[3] Oh confirms this is another way. Oh teaches that a RAN coverage segment can "alternatively" be "the portion" of the RAN coverage that uses a "particular carrier frequency." Ex. 1023 at 4:50-56. The use of "alternatively" and "portion" teaches that in the prior disclosure (i.e., not the alternative), the RAN coverage segment can be a larger whole that includes more than a particular carrier frequency (i.e., it includes multiple carrier frequencies).

	DAS MAPPING DATA	
	RAN COVERAGE SEGMENT(S)	DAS ANTENNA UNIT IP ADDRESS(ES)
1st combination of sectors →	A	xxx.xxx.xxx.1, xxx.xxx.xxx.2, xxx.xxx.xxx.3, xxx.xxx.xxx.6
2nd combination of sectors →	B	xxx.xxx.xxx.5
3rd combination of sectors →	C	xxx.xxx.xxx.4

FIG. 2

Ex. 1003 ¶297; see also Ex. 1023 at 9:11-43, 7:37-42.[4]

<u>Element N:</u> "at least one interface to communicatively couple the host unit to a plurality of remote units …"

This element overlaps with Element D2 Claim 1 and is disclosed for the same reasons. See also Ex. 1003 ¶¶301-07.

[4] Oh specifically teaches the RAN coverage segments in the mapping data "can be defined in any of the ways noted above," where ones of those "ways" is a "combination" of sectors with each sector operating on a particular carrier-frequency (i.e., where each downlink signal comprises a plurality of carriers). Ex. 1023 at 9:7-11.

<u>Element O:</u> "wherein the host unit is configured to send a digital representation of any carrier of any downlink signal it receives to any of the plurality of remote units"

This element overlaps, in part, with Element F of Claim 10. Element F of Claim 10 recites "wherein the host unit is configured to send a digital representation…to the plurality of remote units." As discussed for Element F, Oh discloses this where it teaches the DAS hub (24) is configured to send the signals from the RAN coverage segments to the DAS antenna units via "IP packets," which are the recited digital representations. Ex. 1023 at 8:6-11; Ex. 1003 ¶¶309-12.

Element O adds that the digital representation may be of "any carrier of any downlink signal it receives" and sent to "any of the plurality of remote units." Oh discloses the further part via it teachings about the "mapping data" (46) that correlates RAN coverage segments to DAS antenna units. Ex. 1003 ¶¶313-19.

The key point is that DAS hub is capable of sending any carrier to any desired DAS antenna unit simply by configuring the mapping data such that the RAN coverage segment containing the desired carrier is correlated with the desired DAS antenna unit (e.g., they are in matching rows of the table). Ex. 1003 ¶316. There is no limit for which RAN coverage segment(s) can be corelated with which remote units. Id. ¶315.

Oh teaches the mapping can be "changed when desired" to alter the distribution of RAN coverage segments among the DAS antenna units (e.g., "to add" a correlation correlating the RAN coverage segment containing the desired carrier with the desired DAS antenna unit). Ex. 1023 at 3:26-36, 9:44-58, 10:4-10.; Ex. 1003 ¶317.

Patent Owner may argue Oh teaches to send all the signals from a RAN coverage segments, not a single carrier within the RAN coverage segment. In IPR2018-00571, Patent Owner argued against instituting review based on this. First, to be clear, the PTAB rejected that argument.[5] Second, this element merely specifies the host send "a digital representation" of "any carrier," and does not exclude the digital representation including other carriers. The claim does not say a digital representation of "only" that carrier. The preferred embodiment of the '178 patent sends a digital representation with all the carriers and the remote unit select the desired

[5] Ex. 1036 at 30 ("Oh, however, discloses that carriers within a composite signal may be RAN coverage segments. … Patent Owner's argument of a distinction between the claimed invention's 'sending a digital representation of any downlink signal it receives' and Oh's ability to route any RAN coverage segment to one or more DAS antenna units fails to rebut Petitioner's showing.").

carriers. Ex. 1001 at 6:19-67, 7:27-47. The remotes have "integrated frequency selective" converters with "software settings" that "turn on and off" the carriers. Id. Third, this argument does not avoid Petitioners alternative Ground 7 below of Oh + Wu as Wu teaches to split up composite signals, extract individual carriers, and send only the desired carriers. *See* Ground 7.

> **<u>Element P</u>: "wherein the host unit is configured to transmit a digital representation of a first portion of the plurality of carriers to the first remote unit and a digital representation of a second portion of the plurality of carriers to the second remote unit"**

Oh discloses this element via the "mapping data" (46). Ex. 1003 ¶¶320-326. Figure 2 is informative:

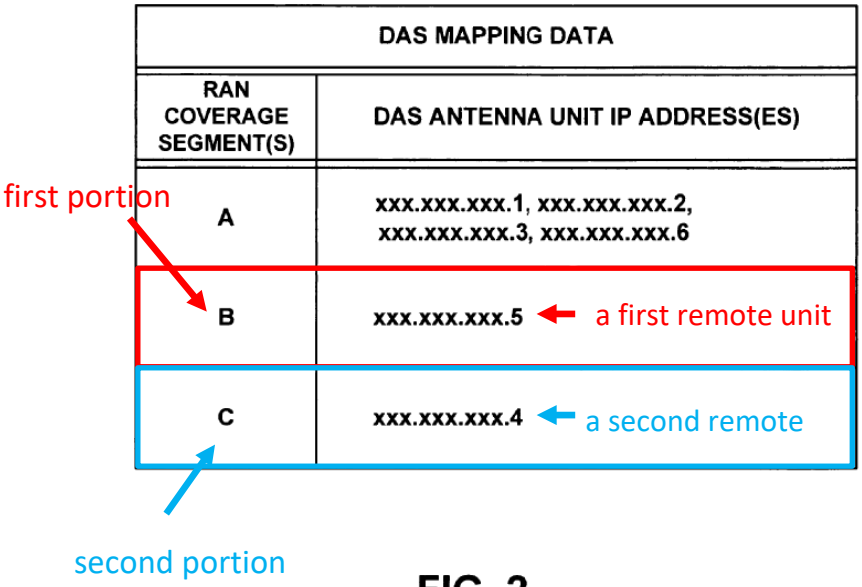

FIG. 2

Ex. 1023 at Fig. 2. Collectively, the incoming signals in three RAN coverage segments correspond to the recited "plurality of carriers." Ex. 1003 ¶321. Individually, each RAN coverage segments corresponds to a "portion" of the plurality of carriers. Id.

Thus, Figure 2 shows an example where the DAS hub is configured to use the mapping data to (a) transmit the recited "first portion" (carrier(s) corresponding to RAN coverage segment B) to a first remote unit (xxx.xxx.xxx.5) and (b) transmit the recited "second portion" (carrier(s) corresponding to RAN coverage segment C) to a second remote (xxx.xxx.xxx.4).[6] Ex. 1003 ¶321; Ex. 1023 at 9:11-20.

Oh also discloses this element via its general disclosure (discussed in the prior element) that different DAS remote units can be correlated with different RAN coverage areas in the mapping data. Ex. 1003 ¶322-24. This means the DAS hub necessarily can be configured to transmit the different portions to different respective remote units. Id. ¶322.

[6] To be clear, theses portions are sent to the DAS antenna units via IP packets (i.e., digital representations). See prior Element O; Ex. 1003 ¶309-12. The IP packets are formed based on the mapping data. Ex. 1023 at 8:1-16.

<u>Element Q</u>: "wherein the digital representation of the first portion includes destination information identifying the first remote unit and the digital representation of the second portion includes destination information identifying the second remote unit, the first portion being different than the second portion"

Oh discloses both that the first and second portions include the recited "destination information" and that the two portions are "different." Ex. 1003 ¶¶327-334.

First, Oh teaches the RAN coverage segments (the portions) are sent to the DAS antenna units via "IP packets" (the digital representations). See Element O; Ex. 1023 at 8:1-11; Ex. 1003 ¶328. IP packets contain a "destination" address. Ex. 1003 ¶¶329-30. The IP standard specifies this:

3. SPECIFICATION

3.1. Internet Header Format

A summary of the contents of the internet header follows:

```
 0                   1                   2                   3
 0 1 2 3 4 5 6 7 8 9 0 1 2 3 4 5 6 7 8 9 0 1 2 3 4 5 6 7 8 9 0 1
+-+-+-+-+-+-+-+-+-+-+-+-+-+-+-+-+-+-+-+-+-+-+-+-+-+-+-+-+-+-+-+-+
|Version|  IHL  |Type of Service|          Total Length         |
+-+-+-+-+-+-+-+-+-+-+-+-+-+-+-+-+-+-+-+-+-+-+-+-+-+-+-+-+-+-+-+-+
|         Identification        |Flags|      Fragment Offset    |
+-+-+-+-+-+-+-+-+-+-+-+-+-+-+-+-+-+-+-+-+-+-+-+-+-+-+-+-+-+-+-+-+
|  Time to Live |    Protocol   |         Header Checksum       |
+-+-+-+-+-+-+-+-+-+-+-+-+-+-+-+-+-+-+-+-+-+-+-+-+-+-+-+-+-+-+-+-+
|                       Source Address                          |
+-+-+-+-+-+-+-+-+-+-+-+-+-+-+-+-+-+-+-+-+-+-+-+-+-+-+-+-+-+-+-+-+
|                    Destination Address                        |
+-+-+-+-+-+-+-+-+-+-+-+-+-+-+-+-+-+-+-+-+-+-+-+-+-+-+-+-+-+-+-+-+
|                    Options                    |    Padding    |
+-+-+-+-+-+-+-+-+-+-+-+-+-+-+-+-+-+-+-+-+-+-+-+-+-+-+-+-+-+-+-+-+
```

Example Internet Datagram Header

Figure 3.

Ex. 1024 at p. 11, 14, 2; Ex. 1025 (same); see also Ex. 1003 ¶329.

When Oh's DAS hub "packetize[s]" a RAN coverage segment, a POSA understands it inserts the matching IP address from the mapping data into the "destination address" field of the packet. Ex. 1003 ¶330. This why the mapping data lists "IP addresses":

DAS MAPPING DATA	
RAN COVERAGE SEGMENT(S)	DAS ANTENNA UNIT IP ADDRESS(ES)
A	xxx.xxx.xxx.1, xxx.xxx.xxx.2, xxx.xxx.xxx.3, xxx.xxx.xxx.6
B	xxx.xxx.xxx.5
C	xxx.xxx.xxx.4

FIG. 2

Ex. 1023 at 2:60-63; 3:32-45, 7:42-47; 8:50-57; 9:11-20; Fig. 5.

Second, Oh teaches the RAN coverage segments sent to the different remotes (the first and second portion) may be "different." Ex. 1003 ¶331-33. Fig. 2 shows this:

DAS MAPPING DATA	
RAN COVERAGE SEGMENT(S)	DAS ANTENNA UNIT IP ADDRESS(ES)
A	xxx.xxx.xxx.1, xxx.xxx.xxx.2, xxx.xxx.xxx.3, xxx.xxx.xxx.6
B	xxx.xxx.xxx.5
C	xxx.xxx.xxx.4

FIG. 2

Ex. 1023 at Fig. 2. "A" and "B" are different RAN coverage segments. Ex. 1023 at 2:64-3:5 (teaching each RAN coverage is a "respective" or "particular" part of the RAN).

<u>Element R</u>: "wherein the host unit is configured to receive a digital representation of at least one uplink signal from each of the plurality of remote units

This element overlaps with Element J of Claim 10 and is disclosed for the same reasons. See also Ex. 1003 ¶¶335-338.

E. <u>Dependent Claims 2-6, 16-18</u>

These claims recite limitations that the host unit is configurable to "dynamically" change from the first to second set of channel signals . Ex. 1003 ¶¶339-63.

Oh teaches the mapping data in the DAS hub (which specifies the sets of signals) can be "dynamically" changed:

> *In a preferred embodiment*, a significant advantage can be provided by allowing *mapping data 46 to be configured and modified* by a system administrator, or perhaps *dynamically by an automated system* (*based on real-time load measurements, event-scheduling data*, or one or more other parameters).

Ex. 1023 at 9:44-58 (emphasis added).

Claim 2. Oh anticipates this claim because it expressly teaches the mapping data can be "dynamically" changed. Ex. 1003 ¶¶341-43

Claims 3 and 16. These claims specify that the dynamic change is "based on" a change in "network conditions." Oh teaches the dynamic change can be "based on" "real-time load measurements," which anticipates this claim. Ex. 1023 at 9:44-48; Ex. 1003 ¶¶344-48. Load is a network condition (and the purpose of measuring load is to detect changes in this condition). Ex. 1003 ¶¶345-47.

Claims 4 and 17 specify that the change is "based on" "load balancing." Oh discloses this where it teaches the dynamic change can be "based on" "load measurements." Ex. 1023 at 9:44-48; Ex. 1003 ¶¶349-61. A POSA understands this refers to load balancing. Ex. 1003 ¶¶349-61.

Claim 5 specifies the change is based on change in "subscriber needs." Oh discloses this where it teaches the dynamic change can be based on "personnel

changes." Ex. 1023 at 9:53-58. Personnel refers to the subscribers. Ex. 1003 ¶362; Ex. 1023 at 5:57-67; 4:65-5:1. A POSA understands that personnel changes refers to a change in subscriber needs. Ex. 1003 ¶362.

Claims 6 and 18 specifies the change is "based on" a "schedule." Oh discloses this where it teaches the change can be based on "event-*scheduling* data." Ex. 1023 at 9:44-48; Ex. 1003 ¶363.

F. <u>Dependent Claims 7 and 24</u>

These claims specify the interface to the remote "comprises" an "optical" interface.

Oh teaches that the DAS hub (24) includes a "packet-switched network interface"(52) to the DAS antenna units. Ex. 1023 at 10:30-34. Oh further teaches including "additional circuitry" for "converting between electrical and *optical* signal forms." Ex. 1023 at 10:37-44 (emphasis added). A POSA understands such circuitry is an "optical interface." Ex. 1003 ¶366. The combination of the (a) "additional circuitry" and (b) "packet-switched network interface" discloses this element. Ex. 1003 ¶366-68

Oh also teaches an "alternative[]" embodiment. Ex. 1023 at 6:56-7:3; Ex. 1003 ¶369-71. It includes (a) fiber optic output port, (b) the electro-optic coupler, (c) external network-connection mechanism to the DAS antenna units. See Ex. 1023 at 6:56-7:3, 5:1-56; Ex. 1003 ¶369-70. The fiber optic output port and

electro-optic coupler are optical interfaces. The combination of (a), (b), and (c) discloses this element. Ex. 1003 ¶370.

G. Dependent Claims 8, 11, 19

These claims specify that the host unit "packetize" the downlink channel signal. Oh expressly teaches the DAS hub "packetize[s]" the incoming traffic into "IP packets." Ex. 1023 at 8:1-16 ("DAS hub 26 may then … *packetize* the bit stream into a sequence of *IP packets* …");[7] Ex. 1003 ¶¶373-79.

H. Dependent Claim 13

This claim specifies the host unit connects to the remote units via an "indirect connection." Oh discloses this where is teaches the DAS hub (26) connects to the antenna units through "packet-switched network" (40), which is an indirect connection:

[7] The IP packet contains a destination address. *See* Claim 21, Element Q; Ex. 1003 ¶¶378-79.

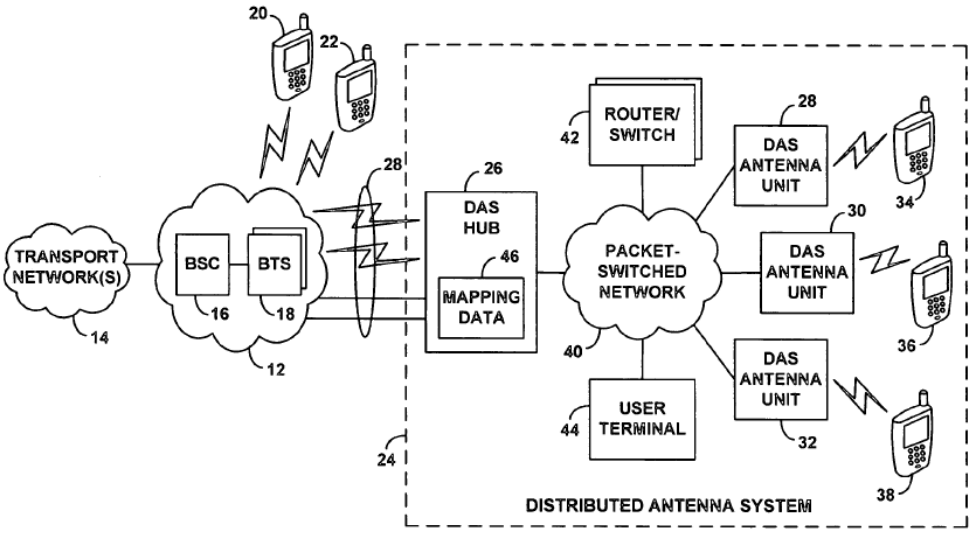

FIG. 1

Ex. 1023 at Fig. 1, 6:6-22; Ex. 1003 ¶¶380-81

I. <u>Dependent Claim 23</u>

This claim specifies that the destination information is "provided in a header." Oh discloses this via its teaching to use "IP packets." Ex. 1023 at 8:6-10; Ex. 1003 ¶¶382-86. As discussed for Claim 21, Element Q, "IP packets" contains a header with destination information.

3. SPECIFICATION

3.1. Internet Header Format

A summary of the contents of the internet header follows:

```
 0                   1                   2                   3
 0 1 2 3 4 5 6 7 8 9 0 1 2 3 4 5 6 7 8 9 0 1 2 3 4 5 6 7 8 9 0 1
+-+-+-+-+-+-+-+-+-+-+-+-+-+-+-+-+-+-+-+-+-+-+-+-+-+-+-+-+-+-+-+-+
|Version|  IHL  |Type of Service|          Total Length         |
+-+-+-+-+-+-+-+-+-+-+-+-+-+-+-+-+-+-+-+-+-+-+-+-+-+-+-+-+-+-+-+-+
|         Identification        |Flags|      Fragment Offset    |
+-+-+-+-+-+-+-+-+-+-+-+-+-+-+-+-+-+-+-+-+-+-+-+-+-+-+-+-+-+-+-+-+
|  Time to Live |    Protocol   |         Header Checksum       |
+-+-+-+-+-+-+-+-+-+-+-+-+-+-+-+-+-+-+-+-+-+-+-+-+-+-+-+-+-+-+-+-+
|                       Source Address                          |
+-+-+-+-+-+-+-+-+-+-+-+-+-+-+-+-+-+-+-+-+-+-+-+-+-+-+-+-+-+-+-+-+
|                    Destination Address                        |
+-+-+-+-+-+-+-+-+-+-+-+-+-+-+-+-+-+-+-+-+-+-+-+-+-+-+-+-+-+-+-+-+
|                    Options                    |    Padding    |
+-+-+-+-+-+-+-+-+-+-+-+-+-+-+-+-+-+-+-+-+-+-+-+-+-+-+-+-+-+-+-+-+
```

Example Internet Datagram Header

Figure 3.

Ex. 1024 at p. 11; Ex. 1003 ¶383.

<u>Ground 7</u>: Oh + Wu renders obvious Claims 1-8, 10-11, 13, 15-19, 21, 23-24

A. <u>Independent Claims 1, 10, 15, 21</u>

Oh anticipates these claims. (Ground 6). Patent Owner may say the signals received by Oh's hub are not "downlink channel signals" (Claim 1, 10, 15) or do not comprise "a plurality of carriers" (Claim 21). Patent Owner may say Oh lacks the ability to transmit "any carrier of any downlink signal it receives to any of the plurality of remote units" or "portions" of the carriers (Claim 21). Petitioner disagrees.

Wu provides further disclosure of receiving and transmitting the type of signal recited in these claims. Ex. 1003 ¶391. As explained in Ground 1, Wu teaches "fine grained control" over carrier channels. *See* Ground 1; Ex. 1005 ¶0009. Wu teaches receiving composite signals with a plurality of carrier channels, using a combiner/splitter to select "individual" or "groups" of the carrier channel, and routing the carrier channels individually or combined to the remote units. Ex. 1005 ¶¶0038, 0047-0049.

A POSA would have found it obvious to modify Oh's DAS hub to implement the Wu's "fine grained" control (, e.g., using a combiner/splitter). Ex. 1003 ¶¶392-96.

First, there was motivation for this modification. Ex. 1003 ¶393. This modification would further Oh's goal of providing an "improved mechanism for routing." Ex. 1023 at 2:34-36. Wu's "fine grained control" would provide further flexibility, granularity, and control over the routing in Oh. Id. This modification also further Oh's goal of allowing the routing to be "changed when desired." Ex. 1023 at 9:49-53. Oh recognizes this is a "significant advantage." Id. at 9:44-48. Wu's fine grained control enables the routing to be changed when desired; thus, a POSA would have been motivated to implement this control to obtain the "significant advantage" recognized by Oh. Ex. 1003 ¶393

Second**,** this modification implicates KSR's teaching that "if a technique has been used to improve one device, and a person of ordinary skill in the art would recognize that it would improve similar devices in the same way, *using the technique is obvious* unless its actual application is beyond his or her skill." KSR Int'l Co. v. Teleflex Inc., 550 U.S. 398, 405, (2007). Oh and Wu are similar devices (they are both digital distributed communication systems that route signals). Ex. 1003 ¶395. Wu's technique would improve Oh in the same way (by allowing Oh's DAS hub to precisely route the signals it receives). The application is not beyond a POSA skills. Ex. 1003 ¶396. Wu's technique uses a combiner/splitter and a routing policy. Id. A combiner/splitter is a well-known component, and it would work with Oh's mapping data (which is similar to Wu's routing policy). Id. Therefore, all independent and dependent claims noted above are obvious.

B. Dependent Claims 2-6, 16-18

These claims recite "dynamically" changing signal sets. To the extent Oh's disclosure is not sufficiently specific, Wu teaches the specifics. Wu teaches the policy (255) defines "rules" for when to dynamically change the signal sets and gives examples that match every one of these claims. *See supra* at Ground 1, Claims 2-6, 16-18; Ex. 1003 ¶399. A POSA would have found it obvious to apply Wu's teachings to Oh. Ex. 1003 ¶¶398-403.

First**,** there was a motivated for this modification. Ex. 1003 ¶403. Oh recognizes there is a "significant advantage" to allowing the mapping data to be dynamically changed by an automated system. Ex. 1023 at 9:44-58. Wu policy (255) with "rules" is an example of an automated system. Ex. 1005 ¶¶0040-0041, 0048; Ex. 1003 ¶401. Correspondingly, a POSA would have been motivated to apply Wu's teaching to obtain this "significant advantage."

Second**,** this modification implicates KSR's teaching that a "predicable variation" of the prior art is likely obvious. *KSR*, 550 U.S. at 417. The proposed modification is a predictable variation of Oh because *Oh itself* already advises to include an "automated system" to "dynamically" changed the routing policy (the mapping data) based on a variety of conditions. Ex. 1023 at 9:44-48; Ex. 1003 ¶401. Wu simply provides further details of the functionality already suggested by Oh. Ex. 1003 ¶401.

C. <u>Dependent Claims 7 and 24</u>

These claims recite an "optical interface." To the extent Oh disclosure is not sufficiently specific, Wu specifically teaches to use an optical interface. *See* supra at Ground 1, Claim 7, 24. Ex. 1003 ¶407. A POSA would have found it obvious to implement Oh with an optical interface (itself or with Wu). Ex. 1003 ¶¶406-24.

First, this modification is a highly "predicable variation" of Oh. *KSR*, 550 U.S. at 417; see also Ex. 1003 ¶¶414-24. The type of interface is a routine design

choice based on the type of cables. Ex. 1003 ¶420. Oh does not specify what type of cables connect the DAS hub and DAS antenna units. Oh generically says that they connect over a "packet-switched network" and labels the interface as "packet-switched network interface." Packet-switched networks commonly use fiber, which means the "packet-switched network interface" for those cables would be an optical interface. Id. ¶¶416-20. An optical version of a "packet-switched network interface" is a standard off-the-shelf component. Id. ¶¶419, 423; Ex. 1035.

Second, a POSA would have been motivated to implement Oh with an optical interface. Ex. 1003 ¶¶409-413. An optical interface would allow Oh's system to (1) communicate with farther antenna units (fibers have longer ranges) and (2) to accommodate deployments where the packet-switched network used fiber. Id.

Regarding the Board's Discretion

The Board should not issue a discretionary denial based on co-pending litigation.

First, this petition involves many claims that are not at issue in the district court action. Less than half of the challenged claims are at issue in the district court (14 of 30).

Second, a final decision by this Board would be due (February 2022) prior to trial in district court. The trial date for the district court action is March 2022. It is

anticipated that this date will be moved later. The district court has suspended all civil and jury trials for months due to the pandemic. Ex. 1042. Therefore, there is a backlog of cases to be tried, which will require rescheduling the present case.

Third, the merits of this case warrant institution. The PTAB has already found very similar claims invalid. Ground 1 shows Wu anticipates nearly all claims. Recall that there was no substantive discussion of Wu (or Oh) during prosecution.

Fifth, it is early in the district court. No claim construction opinions have issued. No depositions have been taken. No expert reports have been submitted.

Sixth, Patent Owner has not pressed for early trial in the district court. Patent Owner asserted the '178 patent in February 2019. Delaware Civil Action No. 1-19-cv-00366. Patent Owner did not serve this complaint. After waiting three months, Patent Owner dismissed the action and filed another action asserting the '178 patent. Patent Owner again waited three months before serving the complaint. Patent Owner's six month delay in serving the complaint shows its litigation is not being pursued urgently.

Lastly, there is an "other circumstance" that supports IPR review. Patent Owner compromised the original prosecution of the '178 patent by not disclosing the PTAB had instituted IPR on Patent Owner's overlapping patent with very similar claims.

Conclusion

There is at least a reasonable likelihood claims 1-30 are invalid.

Respectfully submitted,

Dated: August 14, 2020

By: /s/Samuel A. Hamer

Samuel A. Hamer, Reg. No. 46,754
Carlson Caspers Vandenburgh & Lindquist
200 South Sixth Street, Suite 4200
Minneapolis, MN 55402
(612) 436-9600
Email: shamer@carlsoncaspers.com

Claims Listing Appendix

U.S. Patent No. 10,080,178
Claims 1-30

Designation	Language of Claims 1 and 2-9
Element B	1. A host unit for use in the transport of wireless communications, comprising:
Element D1	at least one interface to communicatively couple the host unit to at least one signal source;
Element D2	at least one interface to communicatively couple the host unit to a plurality of remote units, including at least a first remote unit;
Element E	wherein the host unit is configured to receive a plurality of downlink channel signals from the at least one signal source;
Element F	wherein the host unit is configured to send digital representations of the plurality of downlink channel signals to the plurality of remote units;
Element G	wherein the host unit is configurable to send digital representations of a first set of downlink channel signals to the first remote unit at a first point in time, the first set of downlink channel signals for transmission at an antenna of the first remote unit;
Element H	wherein the host unit is configurable to send digital representations of a second set of downlink channel signals to the first remote unit at a second point in time, the second set of downlink channel signals for transmission at the antenna of the first remote unit; and
Element I	wherein a number of downlink channel signals in the first set of downlink channel signals is different from a number of downlink channel signals in the second set of downlink channel signals.
Claim 2	2. The host unit of claim 1, wherein the host unit is configurable to dynamically change from (a) sending the digital representations of the first set of downlink channel signals to the first remote unit to (b) sending the digital representations of the second set of downlink channel signals to the first remote unit.
Claim 3	3. The host unit of claim 1, wherein the host unit is configurable, based on a change in network conditions, to dynamically change from (a) sending the digital representations of the first set of downlink channel signals to the first remote unit to (b) sending the digital representations of the second set of downlink channel signals to the first remote unit.
Claim 4	4. The host unit of claim 1, wherein the host unit is configurable, based on load balancing, to dynamically change from (a) sending the digital

	representations of the first set of downlink channel signals to the first remote unit to (b) sending the digital representations of the second set of downlink channel signals to the first remote unit.
Claim 5	5. The host unit of claim 1, wherein the host unit is configurable, based on a change in subscriber needs, to dynamically change from (a) sending the digital representations of the first set of downlink channel signals to the first remote unit to (b) sending the digital representations of the second set of downlink channel signals to the first remote unit.
Claim 6	6. The host unit of claim 1, wherein the host unit is configurable, based on a schedule, to dynamically change from (a) sending the digital representations of the first set of downlink channel signals to the first remote unit to (b) sending the digital representations of the second set of downlink channel signals to the first remote unit.
Claim 7	7. The host unit of claim 1, wherein the at least one interface to communicatively couple the host unit to the plurality of remote units comprises an optical interface.
Claim 8	8. The host unit of claim 1, wherein the host unit is configured to packetize each digital representation of a downlink channel signal.
Claim 9	9. The host unit of claim 1, wherein the host unit is configured to packetize each digital representation of a downlink channel signal in compliance with the Common Public Radio Interface (CPRI) standard.

Designation	**Language of Claims 10 and 11-14**
Element A	10. A system for transporting wireless communications, comprising:
Element B	a host unit;
Element C	a plurality of remote units, including at least a first remote unit and a second remote unit;
Element D1	wherein the host unit comprises at least one interface to communicatively couple the host unit to at least one signal source;
Element E	wherein the host unit is configured to receive a plurality of downlink channel signals from the at least one signal source;
Element F	wherein the host unit is configured to send digital representations of the plurality of downlink channel signals to the plurality of remote units;
Element G	wherein the host unit is configurable to send digital representations of a first set of downlink channel signals to the first remote unit at a first point in time, the first set of downlink channel signals for transmission at an antenna of the first remote unit;

Element H	wherein the host unit is configurable to send digital representations of a second set of downlink channel signals to the first remote unit at a second point in time, the second set of downlink channel signals for transmission at the antenna of the first remote unit;
Element I	wherein a number of downlink channel signals in the first set of downlink channel signals is different from a number of downlink channel signals in the second set of downlink channel signals; and
Element J	wherein the host unit is configured to receive digital signals from each of the plurality of remote units.
Claim 11	11. The system of claim 10, wherein the host unit is configured to packetize each digital representation of a downlink channel signal.
Claim 12	12. The system of claim 10, wherein the host unit is connected to each of the plurality of remote units through a direct connection.
Claim 13	13. The system of claim 10, wherein the host unit is connected to each of the plurality of remote units through an indirect connection.
Claim 14	14. The system of claim 10, wherein each remote unit comprises at least one interface to communicatively couple the remote unit to another one of the plurality of remote units in a daisy-chain configuration.

Designation	**Language of Claims 15 and 16-20**
Element A	15. A method for providing digital signals in a Distributed Antenna System (DAS), comprising:
Element G	transmitting from a host unit, at a first point in time, digital representations of a first set of downlink channel signals to a first remote unit, the first set of downlink channel signals for transmission at an antenna of the first remote unit;
Element H	transmitting from the host unit, at a second point in time, digital representations of a second set of downlink channel signals to the first remote unit, the second set of downlink channel signals for transmission at the antenna of the first remote unit;
Element I	wherein a number of downlink channel signals in the first set of downlink channel signals is different from a number of downlink channel signals in the second set of downlink channel signals.
Claim 16	16. The method of claim 15, wherein the host unit dynamically changes based on a change in network conditions from (a) sending the digital representations of the first set of downlink channel signals to the first

	remote unit to (b) sending the digital representations of the second set of downlink channel signals to the first remote unit.
Claim 17	17. The method of claim 15, wherein the host unit dynamically changes based on load balancing from (a) sending the digital representations of the first set of downlink channel signals to the first remote unit to (b) sending the digital representations of the second set of downlink channel signals to the first remote unit.
Claim 18	18. The method of claim 15, wherein the host unit dynamically changes based on a schedule from (a) sending the digital representations of the first set of downlink channel signals to the first remote unit to (b) sending the digital representations of the second set of downlink channel signals to the first remote unit.
Claim 19	19. The method of claim 15, wherein the downlink channel signals are packetized.
Claim 20	20. The method of claim 19, wherein the downlink channel signals are packetized in compliance with the Common Public Radio Interface (CPRI) standard.

Designation	**Language of Claims 21 and 22-25**
Element K	21. A host unit for use in the transport of wireless communications, comprising:
Element L	at least one interface to communicatively couple the host unit to at least one signal source;
Element M	wherein the host unit is configured to receive a plurality of downlink signals from the at least one signal source, each downlink signal of the plurality of downlink signals comprising a plurality of carriers;
Element N	at least one interface to communicatively couple the host unit to a plurality of remote units, including at least a first remote unit and a second remote unit;
Element O	wherein the host unit is configured to send a digital representation of any carrier of any downlink signal it receives to any of the plurality of remote units;
Element P	wherein the host unit is configured to transmit a digital representation of a first portion of the plurality of carriers to the first remote unit and a digital representation of a second portion of the plurality of carriers to the second remote unit,
Element Q	wherein the digital representation of the first portion includes destination information identifying the first remote unit and the digital

	representation of the second portion includes destination information identifying the second remote unit, the first portion being different than the second portion; and
Element R	wherein the host unit is configured to receive a digital representation of at least one uplink signal from each of the plurality of remote units.
Claim 22	22. The host unit of claim 21 wherein the host unit is configured to packetize the plurality of downlink signals it receives in compliance with the Common Public Radio Interface (CPRI) standard to provide at least the digital representation of the first portion and the digital representation of the second portion.
Claim 23	23. The host unit of claim 21 wherein the destination information identifying the first remote unit is provided in a header of the digital representation of the first portion, and the destination information identifying the second remote unit is provided in a header of the digital representation of the second portion.
Claim 24	24. The host unit of claim 21 wherein the at least one interface to communicatively couple the host unit to the plurality of remote units comprises an optical interface.
Claim 25	25. The host unit of claim 21 wherein the host unit is configured to I/Q map and frame the plurality of downlink signals it receives to provide at least the digital representation of the first portion and the digital representation of the second portion.

Designation	**Language of Claims 26 and 27-30**
Element T	26. A host unit for use in the transport of wireless communications, comprising:
Element U	at least one interface to communicatively couple the host unit to at least one signal source;
Element V	wherein the host unit is configured to receive a plurality of downlink signals from the at least one signal source, each downlink signal of the plurality of downlink signals comprising a plurality of carriers;
Element W	at least one interface to communicatively couple the host unit to one or more additional host units;
Element X	wherein the host unit is configured to send a digital representation of any carrier of any downlink signal it receives to the one or more additional host units;
Element Y	at least one interface to communicatively couple the host unit to a

	plurality of remote units, including at least a first remote unit and a second remote unit;
Element Z	wherein the host unit is configured to send a digital representation of any carrier of any downlink signal it receives to any of the plurality of remote units;
Element AA	wherein the host unit is configured to transmit a digital representation of a first portion of the plurality of carriers to the first remote unit and
Element BB	a digital representation of a second portion of the plurality of carriers to the second remote unit, the first portion being different than the second portion; and
Element CC	wherein the host unit is configured to receive a digital representation of at least one uplink signal from each of the plurality of remote units.
Claim 27	27. The host unit of claim 26 wherein the at least one interface to communicatively couple the host unit to the one or more additional host units comprises an optical interface.
Claim 28	28. The host unit of claim 26 wherein the one or more additional host units includes a plurality of additional host units, and the host unit is connected to at least one of the plurality of additional host units through a direct connection and at least one of the plurality of additional host units through an indirect connection.
Claim 29	29. The host unit of claim 26 wherein the at least one interface to communicatively couple the host unit to the at least one signal source includes a plurality of interfaces to communicatively couple the host unit to a plurality of signal sources.
Claim 30	30. The host unit of claim 26 wherein the digital representation of the first portion includes destination information identifying the first remote unit and the digital representation of the second portion includes destination information identifying the second remote unit.

Appendix B: Exhibit List

Exhibit No.	Exhibit Description
1001	U.S. Patent No. 10,080,178
1002	Prosecution History of U.S. Patent No. 10,080,178
1003	Declaration of Dr. Anthony Acampora
1004	*Curriculum Vitae* of Dr. Anthony Acampora
1005	U.S. Patent Application Pub. No. 2010/0128676 "Wu"
1006	Common Public Radio Interface (CPRI) Specification version 4.0 (2008-06-30)
1007	OBSAI "Reference Point 3 Specification Version 3.1" (November 13, 2006)
1008	OBSAI "BTS System Reference Document Version 2.0" (April 27, 2006)
1009	Declaration of Dr. Peter Kenington
1010	U.S. Patent Application Pub. No. 2009/0180426 Al to Sabat et al. ("Sabat '426")
1011	U.S. Patent No. 6,963,552 B2 to Sabat et al. ("Sabat '552")
1012	Common Public Radio Interface Website: www.cpri.info
1013	Common Public Radio Interface Website: www.cpri.info/spec.html
1014	Common Public Radio Interface Website: http://www.cpri.info/faq.html
1015	Wayback - February 21 2009 CPRI Website Downloads
1016	Copy of Common Public Radio Interface (CPRI) Specification version 4.0 (from Wayback Machine website capture)
1017	U.S. Patent No. 8,355,456
1018	U.S. Patent No. 8,400,965
1019	Screen capture of USPTO PAIR showing "Available Documents List" File Wrapper of U.S. Patent No. 8,400,965
1020	Information Disclosure Statement from File History of U.S. Patent 8,400,965

1021	NPL document from USPTO prosecution file history of App. No. 12/694158 (a copy of Common Public Radio Interface (CPRI) Specification version 4.0)
1022	Form SB08 from USPTO prosecution file history for App. No. 12/694158
1023	U.S. Patent No. 7,286,507 ("Oh")
1024	DOD Standard Internet Protocol (RFC 760)
1025	Internet Protocol (RFC 791)
1026	U.S. Published Patent App. No. 2005/0157675 ("Feder")
1027	U.S. Patent No. 8,958,789 ("Bauman")
1028	U.S. Patent No. 8,346,091 ("Kummetz")
1029	U.S. Published Patent App. No. 2011/0237178 ("Seki")
1030	INTENTIONALLY SKIPPED
1031	INTENTIONALLY SKIPPED
1032	U.S. Patent No. 7,848,747 ("Wala")
1033	U.S. Patent No. 7,848,770 ("Scheinert")
1034	U.S. Published Patent App. No. 2008/0119198 ("Hettstedt")
1035	Charles E. Spurgeon, *Ethernet The Definitive Guide* (Feb. 2000) ("Ethernet Guide")
1036	*CommScope Technologies LLC v. Dali Wireless Inc.*, IPR2018-00571, Paper #26 (PTAB Aug. 14, 2018) ("Prior Institution Decision")
1037	*CommScope Technologies LLC v. Dali Wireless Inc.*, IPR2018-00571, Paper #53 (PTAB Aug. 12, 2019) ("Prior Final Decision")
1038	Standing Orders from U.S. District of Delaware.
1039	Dictionary excerpts defining "dynamic".
1040	U.S. Patent No. 9,531,473

CERTIFICATION UNDER 37 CFR § 42.24(d)

Under the provisions of 37 CFR § 42.24(d), the undersigned hereby certifies that the word count for the foregoing Petition for *Inter Partes* Review totals 13,945 words per Microsoft Word word count tool, which complies with requirement of 14,000 words allowed under 37 CFR § 42.24(a)(i).

Respectfully submitted,

Dated: August 14, 2020

By: /s/ Samuel A. Hamer

Samuel Hamer, Reg. No. 46,754
Carlson Caspers Vandenburgh & Lindquist
200 South Sixth Street, Suite 4200
Minneapolis, MN 55402
(612) 436-9600

CERTIFICATE OF SERVICE

Pursuant to 37 CFR §§ 42.6(e)(4)(i) *et seq.* and 42.105(b), the undersigned certifies that on August 14, 2020 a complete and entire copy of this PETITION FOR INTER PARTES REVIEW OF UNITED STATES PATENT NO. 10,080,178 PURSUANT TO 35 U.S.C. §§ 311–319, 37 C.F.R. § 42 and all supporting exhibits were provided by Federal Express, to the Patent Owner by serving the correspondence address of record as follows:

Dali Wireless, Inc.
C/o SHERIDAN ROSS PC
Eric Bomkamp – ebomkamp@sheridanross.com
Robert Brunelli – rbrunelli@sheridanross.com
Sabrina Stavish – sstavish@sheridanross.com
Jason Vick – jvick@sheridanross.com
1560 Broadway
Suite 1200
Denver, CO 80202
PHONE: 303-863-9700

Dated: August 14, 2020

/s/Samuel A. Hamer
Samuel A. Hamer, Reg. No. 46,754
Carlson Caspers Vandenburgh & Lindquist
200 South Sixth Street, Suite 4200
Minneapolis, MN 55402
(612) 436-9600
Email: shamer@carlsoncaspers.com