UNITED STATES PATENT AND TRADEMARK OFFICE

BEFORE THE PATENT TRIAL AND APPEAL BOARD

COMMSCOPE TECHNOLOGIES LLC.
Petitioner,

v.

DALI WIRELESS, INC.
Patent Owner

Case IPR2020-01466
Patent 8,682,338

PATENT OWNER'S PRELIMINARY RESPONSE
UNDER 35 U.S.C. §§ 311-19 AND 37 C.F.R. § 41.100, ET SEQ.

TABLE OF CONTENTS

I. INTRODUCTION 1

II. THE '338 PATENT IMPROVED RADIO RESOURCE EFFICIENCY, USAGE, AND OVERALL PERFORMANCE OF DISTRIBUTED WIRELESS NETWORKS 3

A. Overview 3

B. The Challenged Claims 7

C. Prosecution History 8

III. THE ASSERTED REFERENCES 9

A. Primary References 9

1. *Hettstedt* (Ex. 1005) 9

2. *Oh* (Ex. 1010) 11

3. *Wu* (Ex. 1022) 13

B. Secondary References 15

1. *Sabat* '552 (Ex. 1008) and *Sabat* '426 (Ex. 1021) 15

2. UMTS Standard (Ex. 1006) 15

3. *Scheinert* (Ex. 1013) 19

IV. CLAIM CONSTRUCTION 19

A. Person of Ordinary Skill in the Art (POSA) 20

B. "Digital Access Unit" (Claim 1) 20

C. "Reconfiguring Each Remote Radio Unit" (Claim 1) 21

1. Petitioner Has Not Met its Burden by Failing to Construe "Reconfiguring Each Remote Radio Unit" 21

2. Proper Construction of this Term is "Readjusting the Radio Capacity of At Least One Remote Radio Unit by Changing Configuration Parameters of the At Least One Remote Radio Unit" 23

D. "Load Percentage" (Claims 1 and 3) 25

1. Petitioner Has Failed to Meet Its Burden by Not Construing "Load Percentage" 25

2. Proper Construction of "Load Percentage" is "Amount of Active Capacity Utilized by a Remote Radio Unit Relative to the Maximum Amount of Active Capacity Allocated to the Remote Radio Unit" 27

V. THE PETITION DOES NOT SHOW THAT GROUNDS 1-12 HAVE A REASONABLE LIKELIHOOD OF SUCCESS 28

A. Grounds 1-4: *Hettstedt* Fails to Support Anticipation or Obviousness of Any Challenged Claim 29

1. Ground 1: *Hettstedt* fails to anticipate claims 1-3 29

2. Ground 2: *Hettstedt* alone fails to render claims 1-3 obvious 41

3. Ground 3: *Hettstedt* in view of *Sabat* '552 fails to render claims 1-12 obvious 41

4. Ground 4: *Hettstedt* in view of *Sabat* '552 and UMTS Standard fails to render claims 1-12 obvious 44

B. Grounds 5-8: *Oh* Fails to Support Obviousness of Any Challenged Claim 45

1. Ground 5: *Oh* in combination with *Scheinert* fails to render claims 1 and 2 obvious 45

2. Ground 6: *Oh* in combination with *Hettstedt* and Scheinert fails to render claim 3 obvious 52

3. Ground 7: *Oh* in combination with *Scheinert* in view of *Sabat* '552 fails to render claims 1, 2, and 4-12 obvious 53

4. Ground 8: *Oh* in combination with *Scheinert*, *Hettstedt*, and *Sabat* '552, in view of the UMTS Standard fails to render claims 1-12 obvious 56

C. Grounds 9-12: *Wu* Fails to Support Anticipation or Obviousness of Any Challenged Claim 57

1. Ground 9: *Wu* fails to anticipate Claims 1-3 57

2. Ground 10: *Wu* alone or in combination with the UMTS Standard fails to render claim 1-3 obvious 63

3. Ground 11: *Wu* in combination with the UMTS Standard in view of *Sabat* '552 fails to render claims 1-12 obvious 63

4. Ground 12: *Wu* in combination with *Sabat* '552 and the UMTS Standard in view of *Sabat* '426 fails to render claims 1-12 obvious 65

D. Petitioner's Scattershot Approach, Alleging Many Vague Grounds with Insufficient Particularity, Calls for Discretionary Denial under 35 U.S.C. § 312(a)(3) 66

VI. CONCLUSION 68

TABLE OF AUTHORITIES

CASES

Apple Inc. v. Motorola, Inc.,
757 F.3d 1296, 1305 (Fed. Cir. 2014).....27

Blue Calypso, LLC v. Groupon, Inc.,
815 F.3d 1331 (Fed. Cir. 2016).....16

Groupon, Inc. v. Blue Calypso, LLC,
CBM2013-00033, Paper 51 at 25, 30 (PTAB Dec. 17, 2014).....18

In re Cronyn,
890 F.2d 1158, 1160 (Fed. Cir. 1989).....16

Intelligent Bio-Sys., *Inc*. *v*. *Illumina Cambridge Ltd*.,
821 F.3d 1359, 1367 (Fed. Cir. 2016).....53

Johns Manville Corp. *v*. *Knauf Insulation, Inc*.,
IPR2018-00827, Paper 9 at 13 (PTAB Oct. 18, 2018) 52

Kinetic Techs., Inc., v. Skyworks Solutions, Inc.,
IPR2014-00690, Paper 43 at 19-20 (PTAB Oct. 19, 2015).....17

KSR Int'l Co. v. Teleflex Inc.,
550 U.S. 398, 418 (2007).....52

Kyocera Wireless Corp. v. Int'l Trade Comm'n,
545 F.3d 1340, 1350 (Fed. Cir. 2008).....16

Medtronic, Inc. v. Barry,
891 F.3d 1368, 1380 (Fed. Cir. 2018).....16

Orthopediatrics Corp. *v*. *K2M*, *Inc*.,
IPR2018-01548, Paper 9 at 10 (PTAB Mar. 1, 2019) 20

Phillips v. AWH Corp.,
415 F.3d 1303 (Fed. Cir. 2005).....20

Standard Innovation Corp. v. Lelo, Inc.,
IPR2014-00148, Paper 41 at 11 (PTAB Apr. 23, 2015).....19

STATUTES

§ 103(a) 16

35 U.S.C. § 102(b) 16

35 U.S.C. § 312(a)(3)..... 57, 58

35 U.S.C. § 314(a) 58

RULES

37 C.F.R. § 42.100(b) 20

37 C.F.R. § 42.104 ..... 2, 22, 26

37 C.F.R. § 42.104(b)(3).....20

37 C.F.R. § 42.104(b)(4).....29

37 C.F.R. § 42.108(c).....1

37 CFR § 42.24(b)(1).....70

37 CFR § 42.4(d) 70

EXHIBIT LIST

Exhibit No.	Description
2002	U.S. Provisional Appl. No. 61/382,836
2003	U.S. Patent Appl. Publ. No. 2002/0093926 ("Kilfoyle")
2004	Dali's Opening Claim Construction Brief in District Court of Delaware (C.A. No. 19-952-MN)
2005	Dali's Reply Claim Construction Brief in District Court of Delaware (C.A. No. 19-952-MN)
2006	Final Joint Claim Construction Chart (C.A. No. 19-952-MN)
2007	U.S. Patent No. 5,796,722 ("Kotzin")
2008	ETSI Standards Download Page

I. INTRODUCTION

Petitioner has failed to demonstrate a reasonable likelihood that any of the challenged claims 1-12 of U.S. Patent No. 8,682,338 ("'338 patent") (Ex. 1001) are unpatentable under 37 C.F.R. § 42.108(c). Indeed, there are significant deficiencies in the asserted references, and the Board should deny institution of Grounds 1-12.

First, the '338 patent discloses a method that provides unique *adaptability features* at the remote end of a Distributed Antenna System (DAS) used to configure and reconfigure remote radio units near wireless devices. Such a *novel* reconfiguration of remote radio units enables "a high degree of flexibility to manage, control, re-configure, enhance and facilitate the radio resource efficiency, usage and overall performance of the distributed wireless network." (Ex. 1001 at 3:53-56). The '338 patent claims require, *inter alia*, configuring and reconfiguring each remote radio unit by determining a *load percentage* for the radio unit, and increasing or decreasing the number of carriers in the respective subset of the plurality of carriers based on the *load percentage*.

Petitioner's reliance on each of the primary references to *Hettstedt* (Ex. 1005), *Oh* (Ex. 1010), and *Wu* (Ex. 1022) is fundamentally flawed. All of these references are directed to routing configurations at the headend of the system (*e.g.*, in the host or digital access unit), storing routing tables to relay traffic or map

channels to IP addresses of the radio units at the remote end. Contrary to Petitioner's assertions, updating those tables to alter routing or mapping of channels to radio units does not reconfigure the radio units because there are **no changes made to the configuration of the radio units themselves**, and no configuration changes are made based on determining load percentage for each radio unit.

In each of the primary asserted references, radio units are essentially pass-through devices with static configurations that only receive or transmit traffic on assigned channels. Actual reconfiguration of remote radio units themselves (*e.g.*, increasing or decreasing the number of carriers they are transmitting), whether or not based on the load of the radio unit, is completely missing from *Hettstedt*, *Oh* and *Wu*. Petitioner has also failed to specify where in any of the asserted references "**load percentage**" is determined, and how the number of carriers are increased or decreased at the reconfigured radio unit **based on such load percentage**. In view of these deficiencies, Grounds 1-12 should be denied.

Second, Petitioner has failed to meet its burden of providing how the challenged claims should be construed under 37 C.F.R. § 42.104. Specifically, Petitioner ignores terms for construction such as "reconfiguring each remote radio unit" and determining "load percentage," but distorts these terms to suit its needs in challenging the claims. In particular, Petitioner's application here of "load

percentage" contradicts positions it is taking in district court. As such, Petitioner has not met its burden.

Third, the obviousness Grounds 2-8 and 10-12 should be rejected for failing to present a *prima facie* case of obviousness, which in many cases provide no argument or analysis supporting a motivation to combine. Petitioner fails to specify where at least the following claim limitations are found in the asserted references: (1) configuring and reconfiguring each remote radio unit, (2) determining a *load percentage* for each remote radio unit, and (3) increasing or decreasing the number of carriers in the respective subset of the plurality of carriers based on the load percentage. Petitioner also fails to explain what teaching or motivation would be used to combine the asserted references.

II. THE '338 PATENT IMPROVED RADIO RESOURCE EFFICIENCY, USAGE, AND OVERALL PERFORMANCE OF DISTRIBUTED WIRELESS NETWORKS

A. Overview

The '338 patent claims the benefit of U.S. Provisional Patent Appl. No. 61/382,836 filed on September 14, 2010 (Ex. 2002). The '338 patent disclosed "a *novel Reconfigurable Distributed System* that provides a high degree of flexibility to manage, control, *re-configure*, enhance and facilitate the radio resource efficiency, usage and overall performance of the distributed wireless network." (Ex. 1001 at 5:53-56) (emphasis added). In particular, the '338 patent discloses

techniques that configures and adaptively reconfigures remote radio units ("RRUs") at the remote end of a DAS based on its determination of which radio resources to use, *e.g.*, which RF carriers to transmit.

Referring to FIG. 1 of the '338 patent (shown below), the inventors conceived of a digital access unit ("DAU") (DAU1 101) for a reconfigurable distributed antenna system ("DAS"). The DAU allocates and reallocates radio resources at the remote end of a DAS, specifically at the remote radio units ("RRUs") such as RRUs 103 to 106. (*Id*. at 4:1-19, 11:40-12:4). A key function of the DAU is determining and setting "the appropriate amount of radio resources (such as RF carriers, CDMA codes or TDMA time slots) assigned to a particular RRU or group of RRUs to meet desired capacity and throughput objectives." (*Id*. at 11:22-25).

’338 Patent (Ex.1001) FIG. 1
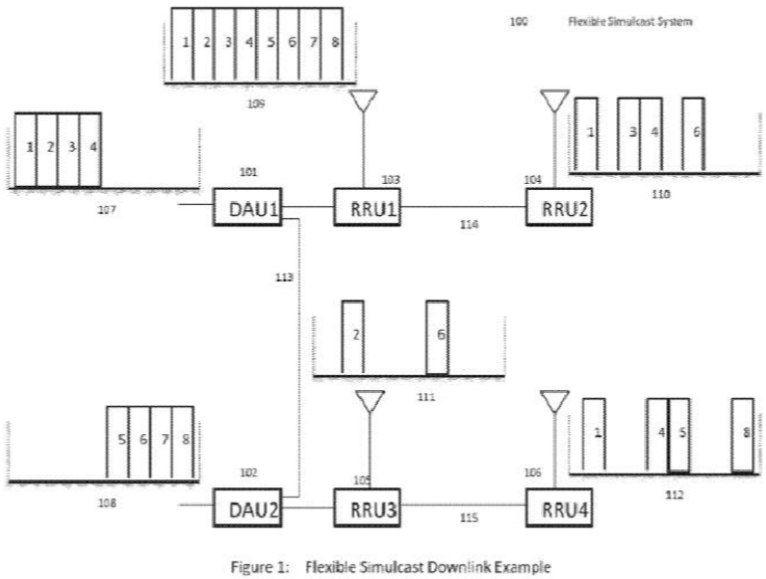

Referring to FIG. 7 of the ’338 patent (reproduced below), in assigning radio resources, the ’338 patent discloses an “RRU Management Control module [that] **sets the individual parameters** of all the **RRU Digital Up[/Down]-Converters** to **enable or disable specific radio resources** from being transmitted by a particular RRU or group of RRUs.” (*Id.* at 11:32-36) (emphasis added). This RRU management control module in the remote radio unit can also adaptively **reconfigure each RRU by changing its parameters to enable or disable specific radio resources**.

’338 Patent (Ex.1002) FIG. 7

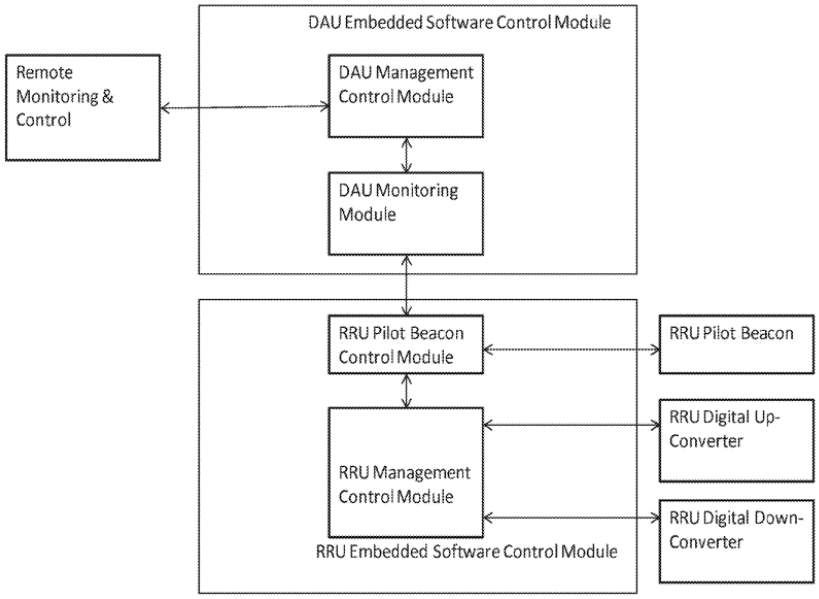

Figure 7: Embedded Software Control Modules

More specifically, to adaptively maximize capacity of the radio resources across the DAS network, a DAU is configured to “detect[] which carriers and corresponding time slots for each carrier are active for each RRU, provide[] information to the DAU Management Control module to help identify when, *e.g.*, a particular downlink carrier is **loaded by a percentage** greater than a predetermined threshold whose value is communicated to the DAU Management Control module by the DAU’s Remote Monitoring and Control function.” (*Id.* at 11:65-12:5) (emphasis added). After detecting the load percentage, “the DAU Management

Control module adaptively modifies the system configuration to slowly begin to deploy additional radio resources (such as RF carriers, CDMA codes or TDMA time slots) for use by a particular RRU which need those radio resources within its coverage area." (*Id*. at 11:49-53). In this way, the DAU **configures and reconfigures the parameters of each RRU** to reallocate radio resources so that they are distributed in an efficient and optimized manner.

B. The Challenged Claims

Claim 1 (reproduced below) is the only independent claim in the '338 patent and recites a method for routing and switching RF signals.

> 1. A method for routing and switching RF signals comprising:
>
> providing one or more remote radio units, each remote radio unit configured to transmit one or more downlink RF signals and to receive one or more uplink RF signals;
>
> providing at least one digital access unit configured to communicate with the one or more remote radio units;
>
> translating the uplink and downlink signals between RF and base band as appropriate;
>
> packetizing the uplink and downlink base band signals, wherein the packetized signals correspond to a plurality of carriers;
>
> configuring each remote radio unit to receive or transmit a respective Subset of the plurality of carriers, each respective subset of the plurality of carriers including a number of carriers;

> reconfiguring each remote radio unit by: determining a load percentage for each remote radio unit;
>
> and increasing or decreasing the number of carriers in the respective subset of the plurality of carriers based on the load percentage;
>
> and routing and switching the packetized signals among the one or more remote radio units via the at least one digital access unit according to a result of the reconfiguring.

Claims 2-12 are dependent on the independent method claim 1. (Ex. 1001 at 13:26-14:32).

C. Prosecution History

During prosecution, Patent Owner filed a Response mailed August 29, 2013 ("8/29/13 Response") to respond to an Office Action mailed May 30, 2019 ("5/30/19 OA"). In the Response, Patent Owner clarified the claims and argued a feature of the claims over U.S. Patent Appl. Publ. No. 2002/0093926 ("Kilfoyle") (Ex. 2003):

> As discussed in the specification, in an embodiment, the DAU monitoring module detects which carriers and corresponding time slots for each carrier are active for each RRU. If a particular carrier is **loaded by a percentage greater than a predetermined threshold**, the DAU management control module **adaptively modifies the system configuration to deploy additional radio resources** for use

> by a particular RRU that needs those radio resources within its coverage area.

(8/29/13 Response, 5-6) (emphasis added).

Subsequently, in a Notice of Allowance mailed November 8, 2013 ("11/813 NOA"), the examiner allowed the '338 patent claims at least for the inclusion of "**reconfiguring each remote radio unit** by: **determining a load percentage** for each remote radio unit" and "increasing or decreasing the number of carriers in the respective subset of the plurality of carriers based on the **load percentage**." (Ex. 1002 at 11/8/13 NOA at 2) (emphasis added) *see also* (Ex. 1001 at 13:17-22).

III. THE ASSERTED REFERENCES

A. Primary References

1. *Hettstedt* (Ex. 1005)

Hettstedt discloses a system having a central management unit (CMU) for "supporting efficient **load balancing at and between base stations**" by the CMU distributing carriers to radio heads. (Ex. 1005 at 4:35-36) (emphasis added). *Hettstedt* also discloses that the CMU includes "mapping means" from carriers or time, frequency or time-frequency allocations to individual radio heads, as identified, *e.g.*, through their **MAC addresses**. (Ex. 1005 at 4:56-60). *Hettstedt* also teaches that the CMU "provides **<u>transparent</u> operation of the radio heads** RH1 to RH5 from the base station." (Ex. 1005 at 4:21-23) (emphasis added).

To effectuate load balancing at the headend of the DAS, *i.e.*, the CMU, referring to FIG. 5 (reproduced below), *Hettstedt* teaches that the CMU distributes carriers, *e.g.*, four carriers per remote radio head RH-1 to RH-N using their MAC addresses. For example, in FIG. 5, *Hettstedt* discloses a base station (BS) that provides M carriers (Ca1 to CaM) to the CMU which in turn routes them to RFH hubs 1-X. (*Id*. at 5:46-58). As illustrated below, the one or more RFH hubs 1-X routes carriers 1-4 to radio head RH-1 according to medium access control (MAC) addresses MA1 to MA4; carriers 5-8 to radio head RH-2 according to MAC addresses MA5 to MA8; and carriers M-3 to M to radio head RH-N according to MAC addresses MA-M3 to MA-M of each radio head mapped to the carriers 1-M. (*Id*. 1005 at 2:22-24, 5:46-58).

Hettstedt (Ex.1005) FIG. 5

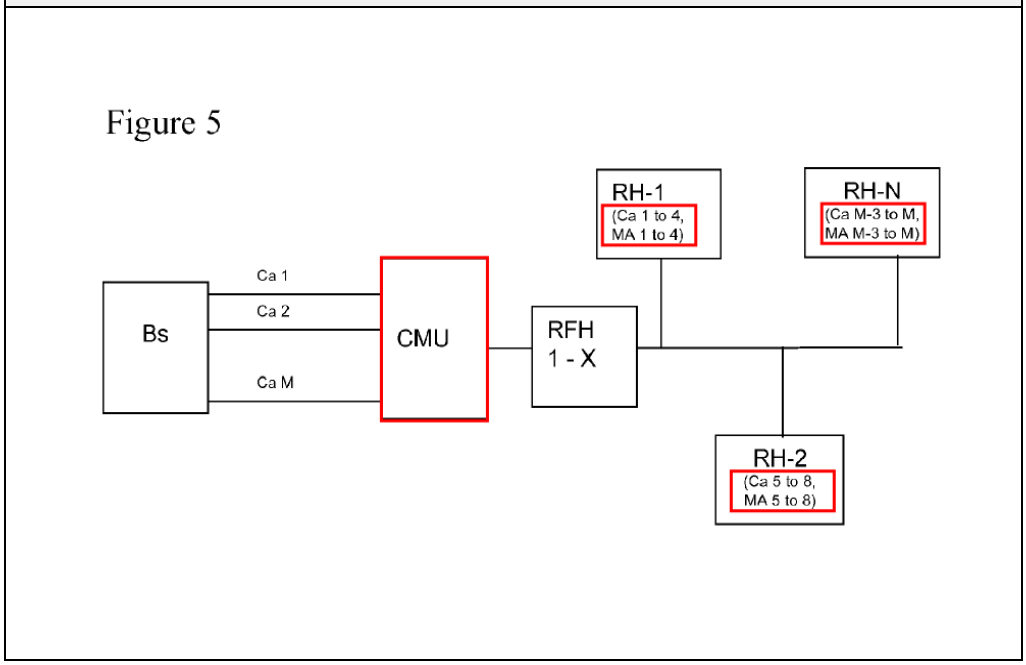

2. *Oh* (Ex. 1010)

No different than *Hettstedt*, *Oh* also is directed to a system that merely distributes communication traffic to pass-through radio units with static configurations. *Oh*, in FIG. 1 (reproduced below), discloses a communication system for routing communication traffic between base stations BTS 18 in a radio access network (RAN) 12 with DAS antenna units 28, 30 and 32 using a DAS hub 26 at the headend. (Ex. 1010 at 2:34-36, 4:33-5:13). At the headend, the DAS hub 26 stores mapping data 46 used to correlate base station coverage segments to IP addresses of DAS antenna units. (*Id*. at 34-48). According to *Oh*, a coverage segment "may be a cell, cell sector, or other coverage area of the RAN, defined by a directional radiation pattern *from a BTS or the RAN*." (*Id*. at 4:50-53). The DAS hub 26 uses the mapping data to route traffic between BTS 18 and antenna units 28, 30 and 32.

Oh (Ex.1003) FIG. 1
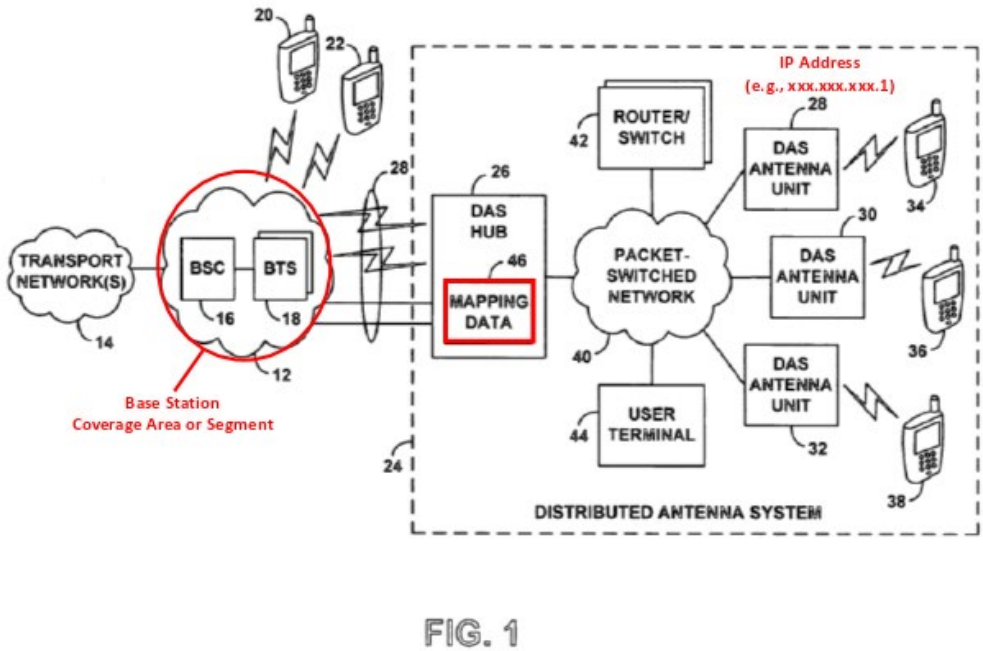

FIG. 1

Specifically, referring to FIG. 2 (reproduced below), *Oh* discloses DAS mapping data stored in a table at the headend in the DAS hub 26. According to *Oh*, the DAS hub 26 will maintain in data storage a set of mapping data 46 that serves to correlate one or more RAN coverage segments of RAN 12 with one or more IP addresses of the various DAS antenna units in DAS 24. As shown below in the mapping table, when the DAS hub 26 of *Oh* receives incoming traffic in a particular RAN coverage segment, the DAS hub 26 consults the mapping data 46 to determine one or more DAS antenna unit IP addresses to which it should route that incoming traffic via packet-switched network 40. (*Id*. at 7:35-47). As shown,

each DAS antenna unit has an IP address corresponding to a coverage segment, *e.g.*, Coverage Segment B corresponds to IP address xxx.xxx.xxx.5.

Oh (Ex.1003) FIG. 2

DAS MAPPING DATA	
RAN COVERAGE SEGMENT(S)	DAS ANTENNA UNIT IP ADDRESS(ES)
A	xxx.xxx.xxx.1, xxx.xxx.xxx.2, xxx.xxx.xxx.3, xxx.xxx.xxx.6
B	xxx.xxx.xxx.5
C	xxx.xxx.xxx.4

FIG. 2

3. *Wu* (Ex. 1022)

Like *Hettstedt and Oh, Wu* also is directed to a system with pass-through radio units that cannot be reconfigured with respect to radio resources. *Wu* discloses a carrier channel distribution system. (Ex. 1022 at Abstract). For instance, in FIG. 2, *Wu* discloses a matrix switch 250 with a memory 251 at the headend that stores a routing policy 255. In *Wu*, the headend matrix switch 250 routes analog channels 270 to an appropriate host unit 230 according to a routing policy 255 for distribution to remote regions or Remote Transceiver Units (RTUs). (Ex. 1022 at [0038]). For example, switch 250 can route channel 1 from band

263A to a first host unit 230 while routing channel 2 from band 263A to a second host unit. (*Id*. at [0039]). Routing policy 255 includes rules for how analog channels should be routed to host units 230 for further distribution to RTUs.

Wu (Ex.1006) FIG. 2

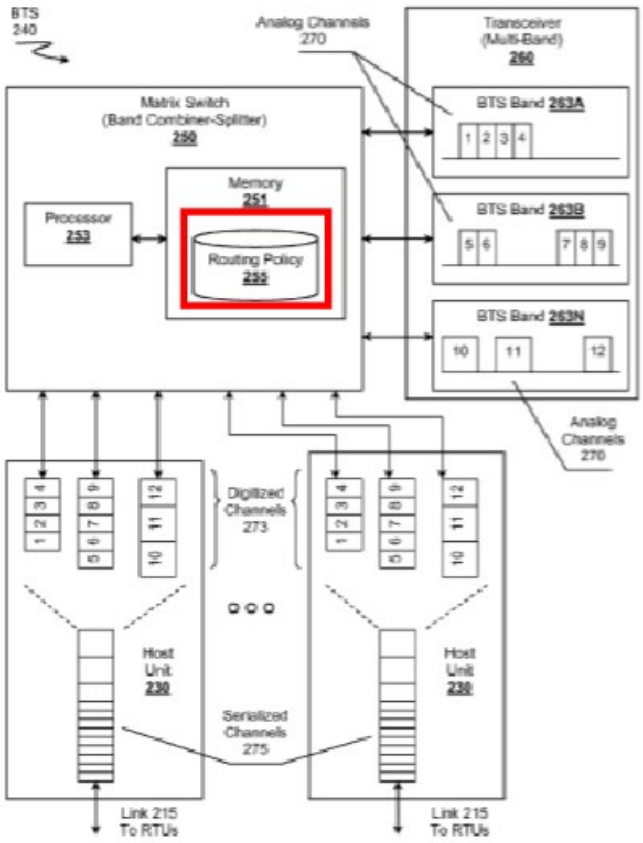

Figure 2

B. Secondary References

1. *Sabat '552* (Ex. 1008) and *Sabat '426* (Ex. 1021)

Petitioner relies on *Sabat '552* for Grounds 3-4, 7-8, and 11-12 and *Sabat '426* for Ground 12. *Sabat '552* discloses a signal distribution system (Ex. 1008 at 2:46-58), and *Sabat '426* discloses a digital distributed wireless communication system. (Ex. 1021 at [0015]).

2. *UMTS Standard* (Ex. 1006)

Petitioner relies on Ex. 1006 as allegedly disclosing the UMTS Standard for Grounds 4, 8, and 10-12. First, "the patent challenger[] bears the burden of establishing that a particular document is a printed publication." *Medtronic, Inc. v. Barry*, 891 F.3d 1368, 1380 (Fed. Cir. 2018), *citing Blue Calypso, LLC v. Groupon, Inc.*, 815 F.3d 1331 (Fed. Cir. 2016). "To qualify as a printed publication, a reference 'must have been sufficiently accessible to the public interested in the art.'" *Blue Calypso*, 815 F.3d at 1348, *quoting In re Cronyn*, 890 F.2d 1158, 1160 (Fed. Cir. 1989). "A reference will be considered publicly accessible if it was 'disseminated or otherwise made available to the extent that persons interested and ordinarily skilled in the subject matter or art exercising reasonable diligence, can locate it.'" *Blue Calypso*, 815 F.3d at 1348, *quoting Kyocera Wireless Corp. v. Int'l Trade Comm'n*, 545 F.3d 1340, 1350 (Fed. Cir.

2008). Here, Petitioner has not provided sufficient evidentiary foundation that the UMTS Standard constitutes a "printed publication" at the time of invention.

Petitioner's evidence in support of the alleged public availability of Ex. 1006 at the time of invention is limited to its expert identifying a date on the face of the document, combined with arguments based on references to other documents purportedly related to Ex. 1006 within one particular patent application,[1] itself submitted by Petitioner as Ex. 1009. *See* Ex. 1003 at ¶ 103. Petitioner's evidence is insufficient to show the dissemination and availability of Ex. 1006 to interested persons.

As an initial matter, Petitioner's reliance on a date marked on the face of Ex. 1006 is insufficient to establish public availability. The Board has held that "bare testimony . . . is not persuasive evidence that the 'printing date' can be equated to the publication date." *Kinetic Techs., Inc., v. Skyworks Solutions, Inc.*, IPR2014-00690, Paper 43 at 19-20 (PTAB Oct. 19, 2015) ("on this record we are not persuaded that Petitioner has demonstrated by a preponderance of the evidence that [reference] is a printed publication available before the priority date").

[1] Petitioners' declarant Dr. Acampora apparently alleges that Ex. 1006 was cited within multiple "applications" (Ex. 1003 at ¶ 103), but Ex. 1009 is the sole evidence of any such "application" submitted by Petitioner.

In addition, Petitioner also apparently alleges that because Ex. 1009 represented that a different, later version of Ex. 1006 "can be downloaded from the Internet site www.3GPP.org" (Ex. 1003 at ¶ 103, quoting Ex. 1009), such must have been the case for Ex. 1006. But the Petition does not rely on the public availability of Ex. 1009, or any documents cited therein; it relies on the alleged public availability of Ex. 1006—which is *not itself referenced within Ex. 1009*.

Moreover, the Board has previously found that generic allegations regarding the ability of interested members of the public to download a particular document are insufficient to establish public availability. Specifically, the Board has identified "gaps in Petitioner's proffered evidence" where the Petitioner's papers "lack[ed] indication that the [reference] was downloaded or otherwise disseminated, or how persons interested and ordinarily skilled in the subject matter or art, exercising reasonable diligence, could locate the [reference] on the [relevant] website." *Groupon, Inc. v. Blue Calypso, LLC*, CBM2013-00033, Paper 51 at 25, 30 (PTAB Dec. 17, 2014) ("[W]e determine that Petitioner has not demonstrated, by a preponderance of the evidence, that the [reference] is a printed publication within the meaning of 35 U.S.C. § 102(b) and, therefore, the [reference] is not prior art to the claims of the [challenged] patent. Therefore, Petitioner may not rely upon the [reference] for its asserted grounds of patentability under 35 U.S.C. § 102(b) and § 103(a).").

Indeed, reviewing a June 2009 website capture of the "Download ETSI Standards" section of the website ETSI.org, submitted as Ex. 2008,[2] indicates that "only publicly available drafts and publications can be downloaded," and that "registration is required" to do so. Petitioner has made no showing regarding whether Ex. 1006 was included within ETSI's "publicly available drafts and publications," or the criteria for "registration" to access such downloads. Petitioner thus has not carried its burden to prove the public availability of Ex. 1006.

[2] Patent Owner does not submit Ex. 2008—a capture from the Internet Archive's Wayback Machine—as evidence, but merely to demonstrate that Petitioner has not carried its burden as to the public availability of Ex. 1006. Patent Owner thus deliberately omits an authenticating declaration. *Cf, e.g.*, *Standard Innovation Corp. v. Lelo, Inc.*, IPR2014-00148, Paper 41 at 11 (PTAB Apr. 23, 2015) ("Our reviewing court has held that printouts of webpages from the Wayback Machine were admissible . . . where the proponent provided one of two types of supporting evidence: one, a witness that testified regarding how the Wayback Machine worked and how reliable its contents were, or two, a witness having personal knowledge that the printouts were authentic.").

3. *Scheinert* (Ex. 1013)

Petitioner relies on *Scheinert* for Grounds 5-8. *Scheinert* discloses a distributed antenna communication system. (Ex. 1013 at Abstract).

IV. CLAIM CONSTRUCTION

According to 37 C.F.R. § 42.104(b)(3), Petitioner has an affirmative burden to set forth how the challenged claims should be construed. *See, e.g.*, *Orthopediatrics Corp. v. K2M, Inc.*, IPR2018-01548, Paper 9 at 10 (PTAB Mar. 1, 2019). In construing challenged claims, the Board follows the standard set by *Phillips v. AWH Corp.*, 415 F.3d 1303 (Fed. Cir. 2005) (*en banc*). *See also* 37 C.F.R. § 42.100(b). Petitioner must therefore advance a rationale for its proposed claim constructions under *Phillips* to satisfy the requirements of 37 C.F.R. § 42.104(b)(3). As such, the '338 patent claims should be construed in accordance with the ordinary and customary meaning of such claim as understood by a one of ordinary skill in the art and the prosecution history pertaining to the patent. 37 C.F.R. § 42.100(b). Petitioner has not done so.

In fact, Petitioner's mapping of these references appears to contradict the claim construction positions it is taking in the district court. For example, in the district court, Petitioner proposes that "load percentage" means "a value representing the portion of available capacity that is in use expressed in hundredths." (Ex. 2005 at 4). Here, however, none of Petitioner's base references

mention "a value . . . expressed in hundredths." Petitioners do not propose a construction in this IPR because it wants to use a broader definition here than in district court. As a result, the Board should deny institution.

A. Person of Ordinary Skill in the Art (POSA)

Petitioner identifies a person of ordinary skill in the art ("POSA") as of the '338 patent's priority date, September 14, 2010, would have: (1) a bachelor's degree in electrical engineering (or equivalent field) with 2-3 years of work experience in wireless communications. (Pet. at 2). Patent Owner submits that the above POSA at the time of the '338 patent would also have industry experience dealing with wireless devices such as radio units and antennas.

B. "Digital Access Unit" (Claim 1)

Petitioner offered this term for construction without proposing a specific definition. (Pet. at 6-8). Instead, Petitioner alleges that "digital access unit" (DAU) was defined in the '338 patent at 5:60-64, yet no express definition was provided in the '338 patent for a DAU in the '338 patent – only a description of the DAU in the context of an exemplary embodiment with a base station (BTS).

Nevertheless, Patent Owner submits that "digital access unit" has a plain and ordinary meaning and, if the Board believes this term needs further construction, Patent Owner submits that its plain and ordinary meaning is "a unit that manages communications between an operator network and one or more remote radio unit."

For example, a POSA would review the ’338 patent and find that a digital access unit (“DAU”) communicates with devices in a wireless operator network. (Ex. 1001, FIG. 4). The ’338 patent discloses that each digital access unit is associated with—*i.e.*, receives or transmits to—one or more operator networks. (*See*, *e.g.*, Ex. 1001 at 6:13-15 (disclosing a DAU with “one wireless operator”), 6:16-18 (disclosing a DAU in communication with “a second base station belonging to the same wireless operator”), 7:36-54). Despite the Petitioner not having defined this term, if the Board requires this term to be construed, it should mean “a unit that manages communications between an operator network and one or more remote radio unit.”

C. **“Reconfiguring Each Remote Radio Unit”** (Claim 1)

1. Petitioner Has Not Met its Burden by Failing to Construe “Reconfiguring Each Remote Radio Unit”

An important feature of claim 1 is “reconfiguring each remote radio unit.” (Ex. 1001 at 5:53-56). By not offering a construction for “reconfiguring each remote radio unit,” Petitioner fails to meet its burden of providing “[h]ow the challenged claim is to be construed.” 37 C.F.R. § 42.104. Yet, in a parallel litigation in District Court in Delaware, Petitioner offered a construction for this term to mean “**changing the configuration of each remote radio unit**.” (Ex. 2004) (Ex. 2005) (Ex. 2006 at 3) (emphasis added). Petitioner’s inconsistency on

this term betrays its knowledge that the asserted references do not teach this claim element.

Petitioner's treatment of this claim term disregards a *novel* aspect of '338 patent and, in doing so, relies on incomplete claim definitions to advance erroneous theories of unpatentability. None of the asserted references address configuring and reconfiguring of a remote radio unit, and Petitioner should not be permitted to obfuscate the deficiencies of its petition by avoiding construction of the term. Indeed, the '338 patent discloses adaptive resource allocation by reconfiguring each remote radio head according to a respective load percentage determined for each remote radio head. (Ex. 1001 at 13:17-22). To reallocate radio resources, each remote radio head is configured and then reconfigured to increase or decrease its number of carriers. (*Id*). Reconfiguring a remote radio head to increase or decrease its number of carriers includes changing configuration parameters within the radio head itself. (*Id*. at 11:18-39) By not construing "reconfiguring each remote radio unit," Petitioner ignores an important aspect of the '338 patent claims and, therefore, does not carry its claim construction burden.

2. Proper Construction of this Term is "Readjusting the Radio Capacity of At Least One Remote Radio Unit by Changing Configuration Parameters of the At Least One Remote Radio Unit"

Patent Owner submits that this term to a POSA means "readjusting the radio capacity of each remote radio unit by changing the configuration parameters of the remote radio units." A POSA would review the '338 patent and discover a *novel* way of reconfiguring remote radio units to provides unique adaptability of readjusting radio units in a DAS, which enables "a high degree of flexibility to manage, control, re-configure, enhance and facilitate the radio resource efficiency, usage and overall performance of the distributed wireless network." (Ex. 1001 at 3:53-56). This construction captures a novel feature of the invention by clarifying that reconfiguration is achieved by readjusting the radio capacity of one or more remote radio units by changing configuration parameters. (*Id*. at 4:2-19, 7:16-22-37, 8:8-32, 11:40-12:10).

For example, the '338 patent describes how to implement adaptive changes to radio capacity based on system demand—*e.g.*, at lunchtime when users move from offices to a cafeteria, increasing load in the cafeteria. (*Id*. at 6:36-39).This *novel* feature involves setting "the appropriate amount of radio resources (such as RF carriers, CDMA codes or TDMA time slots) [that are] assigned to a particular RRU or group of RRUs to meet desired capacity and throughput objectives." (*Id*. at

11:22-25). The ’338 patent further teaches a POSA to adjust the capacity of remote radio units when “a particular downlink carrier is loaded by a percentage greater than a predetermined threshold.” (*Id*. at 11:44-46). If the threshold for changing system capacity is met, the DAU “adaptively modifies the system configuration to slowly begin to deploy additional radio resources . . . for use by a particular RRU which need[s] those radio resources within its coverage area.” (*Id*. at 11:49-53).

Simultaneously, “the system configuration . . . slowly begin[s] to remove certain radio resources . . . for use by a particular RRU which no longer needs those radio resources.” (*Id*. at 11:55-58). The ’338 patent further explains to a POSA that these adaptive reconfigurations are effectuated by changing the radio unit’s configuration parameters such as which specific carriers it should transmit at the radio unit’s antenna port and which carriers are present in downlink output signal. (*Id*. at 6:31-51, 6:52-7:4). In another example, the ’338 patent describes certain “radio units configured to receive uplink signals” within one carrier bandwidth and other units configured to reject uplink signals within another carrier bandwidth. (*Id*. at 8:63-9:17). Patent Owner’s construction properly captures all of these inventive features and remains true to the express language of the claims. Accordingly, the Board should adopt Patent Owner’s construction for this term.

D. **"Load Percentage"** (Claims 1 and 3)

1. Petitioner Has Failed to Meet Its Burden by Not Construing "Load Percentage"

Another important feature of claim 1 is not only "reconfiguring each remote radio unit," but also determining a "*load percentage*" and "increasing or decreasing the number of carriers based on the *load percentage*. (Ex. 1001 at 13:18-22) (emphasis added). By not offering a construction for this term, Petitioner further fails to meet its burden of providing how the challenged claim is to be construed. *See* 37 C.F.R. § 42.104.

In the parallel litigation in District Court in Delaware, however, Petitioner offer a narrow construction for "percentage" as "a part of a whole expressed in hundredths" and "load percentage" as "a value representing the portion of available capacity that is in use *expressed in hundredths*." (Ex. 2006 at 4). Petitioner also provided an example of "load percentage" in the parallel litigation – "if a remote unit is allocated ten channels and three of those channels are in use, 30% is an example of a load percentage." (Ex. 2005 at 8). A 30% load percentage, by Petitioner's example, would also be an effective indicator in the '338 patent of the unused resources available for the remote unit – *i.e.*, 70% of the radio resources are available. But here, Petitioner attempts to broaden the claim in order to read "load percentage" on the asserted references, Petitioner asserts, *e.g.*, that:

> ***Hettstedt* does not use the term "percentage"** when describing the load measurements. Dr. Acampora explains that POSA reading *Hettstedt* would recognize that the load measurements would be commonly expressed as a percentage representing the portion of the total capacity presently in use. That is, POSA would recognize that load is a measure of resource consumption in the cell and **would be commonly expressed as a fraction** (such as a percentage) of the time-frequency resources that are scheduled to deliver data.

(Pet. at 23) (emphasis added). Here, Petitioner also ignores that the operative claim term is "load percentage," and instead only focuses on "percentage," which is improper. *See, e.g.*, *Apple Inc. v. Motorola, Inc.*, 757 F.3d 1296, 1305 (Fed. Cir. 2014)("Thus, Apple's construction conflicts with the claim language by ignoring the claim term 'server.'").Petitioner cannot ignore the word "load" in the phrase "load percentage," as it strips the meaning of "percentage" from its proper context. *Id*.

Contrary to Petitioner's construction in the parallel litigation, the Petition is also silent about "hundredths" and only mentions here that a load would be expressed as a "fraction," which actually further supports Patent Owner's proposed construction discussed below. Because Petitioner does not offer a construction and bends the interpretation of "load percentage," Petitioner has failed to meet its burden to set forth how the challenged claim should be construed.

2. Proper Construction of "Load Percentage" is "Amount of Active Capacity Utilized by a Remote Radio Unit Relative to the Maximum Amount of Active Capacity Allocated to the Remote Radio Unit"

Patent Owner submits that "load percentage" to a POSA means the "amount of active capacity utilized by a remote radio unit relative to the *maximum amount* of active capacity allocated to the remote radio unit." To maximize the capacity of the radio resources across the DAS network, the '338 patent teaches a DAU configured to "detect[ ] which carriers and corresponding time slots for each carrier are active for each RRU, provide[ ] information to the DAU Management Control module to help identify when, *e.g.*, a particular downlink carrier is loaded by a percentage greater than a predetermined threshold whose value is communicated to the DAU Management Control module by the DAU's Remote Monitoring and Control function." (Ex. 1001 at 11:41-48).

For example, the downlink carrier can be loaded at, *e.g.*, 91%, which is above a predetermined value of 90%. By comparing the load to a predetermined threshold, the DAU Management Control Module can determine the active capacity used (how the radio unit is loaded) relative to the maximum active capacity allocated for the radio unit. In the above example, there would be 9% of the maximum capacity available.

Patent Owner's construction is similar to the explanation from Petitioner's expert that a load percentage is well understood to mean the portion of total capacity presently in use relative to the maximum planned load (*i.e.*, maximum allocated load). (Pet. at 23-24). As such, the idea of a relative value is how a person of ordinary skill in the art would have understood the term "load percentage,"—*i.e.*, an amount of active capacity utilized by a remote radio unit relative to the maximum amount of active capacity allocated to the remote radio unit.

V. THE PETITION DOES NOT SHOW THAT GROUNDS 1-12 HAVE A REASONABLE LIKELIHOOD OF SUCCESS

Hettstedt, *Oh*, and *Wu* do not support Grounds 1-12. A cursory examination of these references reveals substantial deficiencies with respect to the challenged claims. Specifically, Petitioner has failed to "specify where each element of the claim is found in the prior art patents or printed publications relied upon." Most notably, Petitioner has entirely failed to specify where "configuration"/"reconfiguration" and "load percentage" are disclosed in the asserted references. 37 C.F.R. § 42.104(b)(4). Accordingly, Grounds 1-12 should be denied because Petitioner has not met its burden to show that each element is present in the asserted references.

A. Grounds 1-4: *Hettstedt* Fails to Support Anticipation or Obviousness of Any Challenged Claim

Petitioner does not show a reasonable likelihood that its primary reference *Hettstedt* for Grounds 1-4 discloses, teaches, or suggests each element of any challenged claim. Petitioner relies on *Hettstedt* for both its anticipation arguments in Ground 1 and as the primary reference for its obviousness arguments in Grounds 2-4. Each of Petitioner's asserted grounds fails because *Hettstedt* does not disclose, teach, or suggest, most notably, "configuring" and "reconfiguring each remote radio unit"; "determining a *load percentage* for each remote radio unit"; or "increasing or decreasing the number of carriers in the respective subset of the plurality of carriers based on the load percentage."

1. Ground 1: *Hettstedt* fails to anticipate claims 1-3

a. *Hettstedt* fails to disclose "configuring each remote radio unit to receive or transmit a respective subset of the plurality of carriers"

Claim 1 recites "configuring each remote radio unit to receive or transmit a respective subset of the plurality of carriers." (Ex. 1001 at 13:13-16). Petitioner asserts that "*Hettstedt*'s remote radio heads are configured to be frequency selective and are configured to receive, for example, only up to four carriers," but fails to specify where in *Hettstedt* a radio head is actually configured, especially with configuration parameters.

By way of contrast, the ’338 patent clearly explains how a remote radio unit is configured, for example:

> “In turn, the RRU Management Control module **sets the individual parameters of all the RRU Digital Up-Converters to enable or disable specific radio resources** . . . and also sets the individual parameters of all the RRU Digital Down-Converters to **enable or disable specific uplink radio resources** . . ..”

(Ex. 1001 at 11:30-39) (emphasis added).

The ’338 patent further explains that these adaptive reconfigurations are effectuated by changing the radio unit’s configuration parameters that dictate which specific carriers it transmits and receives. For example, software settings within the radio unit are configured such that certain carriers are present in the downlink output signal at the radio unit’s antenna port. (*Id*. at 6:31-34, 6:42-45, 6:52-55, 6:62-65). In another example, the ’338 patent describes certain radio units “configured to receive uplink signals” within one carrier bandwidth and other units configured to reject uplink signals within another carrier bandwidth. (*Id*. at 8:63-67).

Hettstedt lacks any disclosure of configuring a remote radio unit. Indeed, *Hettstedt* teaches a “cell management unit **CMU** [that] provides **<u>transparent</u> operation of the radio heads** RH1 to RH5 from the base station.” (Ex. 1005 at 4:21-23) (emphasis added). Based on this teaching, *Hettstedt*’s radio heads are

pass-through devices that relay signals exactly as they are received—*i.e.*, "**transparent operation**"—without configuration or reconfiguration of the radio units themselves. Communications are simply mapped to the remote radio units by way of their MAC addresses to receive and transmit signals. (Ex. 1005 at 5:46-58). *Hettstedt* therefore does not disclose configuring or reconfiguring remote radio units.

In *Hettstedt*, referring to FIG. 5 (reproduced below), a radio head can receive or transmit four carriers CA 1-4 that are assigned to it. Specifically, *Hettstedt* discloses a headend system having a central management unit (CMU) for "supporting efficient **load balancing at and between base stations**," by the CMU allocating carriers to radio heads. (Ex. 1005 at 4:35-36) (emphasis added). To effectuate load balancing at the headend (*i.e.* among the base stations), the CMU allocates carriers, *e.g.*, four carriers per remote radio head RH-1 to RH-N.

Hettstedt (Ex.1005) FIG. 5

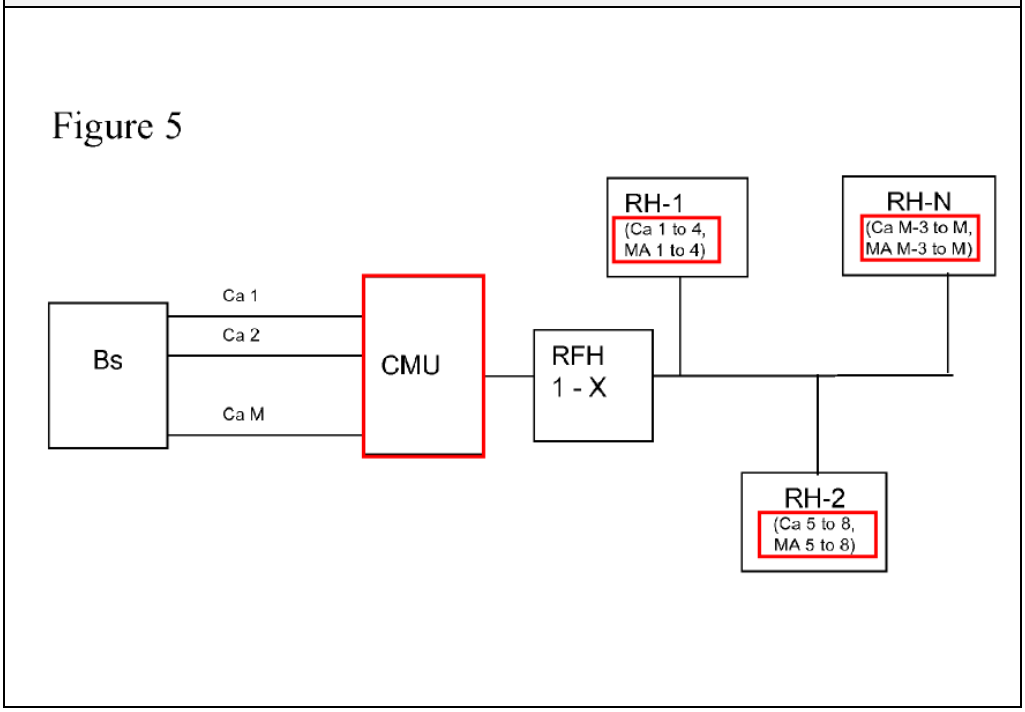

Furthermore, *Hettstedt* does not teach that radio heads, *e.g.*, RH-1, are configured to enable or disable carriers CA 1-4. Rather, those carriers are allocated to RH-1 only at the headend in the CMU – and not at RH-1 by addressing communications on carriers CA 1-4 to RH-1, all done in the headend CMU. Ex. (1005 at 4:56-60). The remote radios then transparently pass on whatever communications are addressed to them. (Ex. 1005 at 4:21-23).

Petitioner has failed to show that radio units are themselves configured or reconfigured in *Hettstedt,* and therefore has failed to show this reference discloses

"configuring each remote radio unit to receive or transmit a respective subset of the plurality of carriers." Accordingly, this element is missing in *Hettstedt*.

b. *Hettstedt* fails to disclose "reconfiguring each remote radio unit"

Claim 1 recites "reconfiguring each remote radio unit." The proper construction for this term is "readjusting the radio capacity of each remote radio unit by changing the configuration parameters of the remote radio units."

To read *Hettstedt* on this claim element, Petitioner refers to the central management unit (CMU)—not the radio head—that includes:

> means for supporting **efficient load balancing at and between base stations** through adaptive cell reconfiguration, especially through the shifting of un-used carriers from radio heads inside areas of low traffic to radio reads inside areas of high traffic load.

(Ex. 1005 at 4:35-39) (Pet. at 22). *Hettstedt* further discloses that the CMU includes:

> **mapping means** from carriers or time, frequency or time frequency allocations to **individual radio heads, as identified e.g. through their MAC addresses** or the connectors of the respective digital lines to which the radio heads are connected.

(Ex. 1005 at 4:56-60) (emphasis added).

Petitioner asserts that *Hettstedt's* CMU controls the frequency allocation of each carrier to the remote radio heads by "**changing the MAC address** of a specific carrier packet to correspond no longer to a first remote radio head." (Pet. at 22) (emphasis added). Petitioner also asserts that changes to MAC addresses at the CMU in *Hettstedt* shifts carriers to remote radio heads. (Pet. 22-24). But Petitioner fails to specify where in *Hettstedt* a remote **radio head is reconfigured** by changing parameters of the radio head. Indeed, *Hettstedt* specifically teaches that the "cell management unit CMU provides **transparent operation of the radio heads RH 1 to RH 5** from the base station"—without reconfiguration of any type to a remote radio head. (Ex. 1005 at 21-23) (emphasis added).

By way of contrast, the '338 patent describes, for example, reconfiguring the remote radio units by changing the parameters of the remote radio units themselves:

> The software settings within RRU2 are configured either manually or automatically such that Carriers 1, 3, 4 and 6 are present in downlink output signal 110 at the antenna port of RRU2. The capacity of RRU2 is **set to a much lower value than RRU1 by virtue of its specific Digital Up Converter settings**. The individual Remote Radio Units have integrated frequency selective DUCs and DDCs with gain control for each carrier. **The DAUs can remotely turn on and off the individual carriers via the gain control parameters.**

(338 patent at 6:42-51). Such a reconfiguration of a radio head that readjusts radio capacity by turning on and off individual carriers at the remote—rather than passing carriers down from the DAU/CMU or not—is not disclosed or taught in *Hettstedt*. Accordingly, *Hettstedt* fails to disclose "reconfiguring each remote radio unit."

c. *Hettstedt* fails to disclose "determining a load percentage for each remote radio unit"

Claim 1 recites "determining a load percentage for each remote radio unit." As properly construed, "load percentage" means the "amount of active capacity utilized by a remote radio unit relative to the maximum amount of active capacity allocated to the remote radio unit." *Hettstedt* does not disclose determining a load percentage. In fact, Petitioner admits that *Hettstedt* does not use "percentage" at all, but that "load measurements would be commonly expressed as a percentage" based on expert testimony, not a teaching in *Hettstedt*. (Pet. at 23).

Specifically, *Hettstedt* discloses a CMU that includes a "means for **individual load identification for each carrier** on each of the radio heads by air interface activity detection and interference sensing." (Ex. 1005 at 8:20-22). *Hettstedt* cites on its face a reference to U.S. Patent No. 5,796,722 ("*Kotzin*") (Ex. 2007) that describes how "load" is measured in such systems:

> . . . a multi-carrier wireless communications system beneficially employs the use of handoff as a means for balancing **call traffic**

> **(commonly referred to as "load")** among a plurality of carriers with the communications system.

(Kotzin at 2:59-64) (emphasis added). In other words, a POSA would read *Hettstedt* including the references cited by *Hettstedt* and understand that load refers to call traffic, but the amount of call traffic does not indicate the radio resource capacity (*e.g.*, carriers) available to the radio unit. As such, in *Hettstedt*, identifying load by the CMU does not equate to determining "load percentage" placed on a particular radio unit – *i.e.*, the amount of **active capacity utilized by a radio head relative to the maximum amount of active capacity** allocated to the radio head.

By contrast, the '338 patent refers to load on a carrier by percentage:

> . . . detect[] **which carriers and corresponding time slots for each carrier are active for each RRU**, provide[] information to the DAU Management Control module to help **identify when, e.g., a particular downlink carrier is loaded by a percentage greater than a predetermined threshold** whose value is communicated to the DAU Management Control module by the DAU's Remote Monitoring and Control function.

(Ex. 1001 at 11:41-48) (emphasis added). For example, the downlink carrier can be loaded at, *e.g.*, 91%, which is above a predetermined value of 90%. By comparing the load to a predetermined threshold, the DAU Management Control Module can determine the active capacity used (*i.e.* how the radio unit is currently loaded)

relative to the maximum active capacity allocated for the radio unit. In this example, 9% of the maximum capacity remains available. In this way, the '338 patent teaches that the DAU Management Control Module can determine the active capacity used (how much the radio unit is loaded) relative to the maximum active capacity for the radio head, and thus the load percentage is compared to a predetermined threshold.

Petitioner has not met its burden of specifying where in *Hettstedt* determining a "load percentage" can be found. Accordingly, *Hettstedt* fails to disclose "determining a load percentage."

d. *Hettstedt* fails to disclose "decreasing the number of carriers in the respective subset of the plurality of carriers based on the load percentage"

Claim 1 recites "decreasing the number of carriers in the respective subset of the plurality of carriers based on the load percentage." Because *Hettstedt* does not disclose "determining a load percentage," this element is missing for the same reasons as set forth in Section V.A.1.c above. Furthermore, *Hettstedt* teaches that CMU includes means for supporting efficient load balancing by:

> . . . shifting of **un-used carriers** from radio heads inside areas of **low traffic load** to radio heads inside areas of high traffic load.

(Ex. 1005 at 3:17-24) (emphasis added). Here, *Hettstedt* requires two conditions to shift away carriers: (1) the carriers are un-used by (2) radio heads inside areas of

low traffic load. These conditions do not meet the claim element because a radio head in *Hettstedt* is not decreasing carriers in a respective subset **based on load percentage**.

By contrast, the '338 patent provides a DAU configured to:

> "detect[ ] which carriers and corresponding time slots for each carrier are active for each RRU, [and] provide[ ] information to the DAU Management Control module to help identify when, *e.g.*, a particular downlink carrier is **loaded by a percentage greater than a predetermined threshold** whose value is communicated to the DAU Management Control module by the DAU's Remote Monitoring and Control function."

(Ex. 1001 at 11:41-48) (emphasis added). For example, the downlink carrier in a remote radio unit can be loaded at 20%, which may be less than a predetermined threshold of 25%, and thus indicates that 80% of the maximum capacity is available. In such case, the "the DAU Management Control module adaptively modifies the system configuration to slowly begin to remove certain radio resources (such as RF carriers, CDMA codes or TDMA time slots) for use by a particular RRU which no longer needs those radio resources within its coverage area." (Ex. 1001 at 53-58).

Petitioner has failed to show how *Hettstedt* is using a "load percentage" to shift carriers away to other radio heads from an underloaded remote radio unit, but

rather it is shifting carriers identified as "unused". Accordingly, *Hettstedt* fails to disclose this term.

e. *Hettstedt* fails to disclose "increasing the number of carriers in the respective subset of the plurality of carriers based on the load percentage"

Claim 1 recites "increasing [or decreasing] the number of carriers in the respective subset of the plurality of carriers based on the load percentage." Because *Hettstedt* does not disclose "determining a load percentage," this element is missing for the same reasons as set forth in Section V.A.1.c above. Petitioner also refers to language in claim 2 of *Hettstedt* that recites a "means for activation of shifted carriers at locations where the remote radio heads are **loaded over a predetermined value**." (*Pet*. at 23) (emphasis added). But Petitioner's reference to claim 2 in *Hettstedt* is deficient because there is no teaching in *Hettstedt* that the load on the radio head is an amount of active capacity utilized by the radio head **relative to the maximum amount of active capacity allocated to the radio head**. In other words, "load percentage" is not disclosed in *Hettstedt*. Accordingly, *Hettstedt* fails to disclose this term.

f. *Hettstedt* fails to disclose "routing and switching the packetized signals among the one or more remote radio units via the at least one digital access unit according to a result of the reconfiguring"

Claim 1 recites "routing and switching the packetized signals among the one or more remote radio units via the at least one digital access unit according to a result of the reconfiguring." Because *Hettstedt* does not disclose the "reconfiguring" claim elements, this element is missing for the same reasons as set forth in Sections V.A.1.c-e above. That is, *Hettstedt* does not teach radio heads reconfigured as set forth in the claims.

g. *Hettstedt* fails to disclose "determining the load percentage comprises detecting which carriers are active for each remote radio unit"

Claim 3 recites wherein "determining the load percentage comprises detecting which carriers are active for each remote radio unit." Because *Hettstedt* does not "determine load percentage," this claim element is missing for the same reasons as set forth in Sections V.A.1.c-e. Petitioner asserts that "air interface activity detection" entails detecting which carriers are active for each radio unit in *Hettstedt*. (Pet. at 26). And even if *Hettstedt* does detect active carriers, *Hettstedt* does not teach detecting active carriers in determining the amount of active capacity utilized by the radio head **relative to the maximum amount** of active

capacity allocated to the radio head, as required by independent claim 1 of the ’338 patent. Accordingly, this element is missing in *Hettstedt*.

2. Ground 2: *Hettstedt* alone fails to render claims 1-3 obvious

Petitioner asserts that it would have been obvious to calculate load as percentage in *Hettstedt* and relies on conclusory expert testimony in support of that assertion. (Pet. at 26). Yet, as noted above in Section V.A.1.c, *Hettstedt* refers to load on a radio head, which a POSA when reading *Kotzin* cited by *Hettstedt*, would understand as ***call traffic***. There is no suggestion that call traffic would indicate the maximum available capacity available to a radio head. As such, there is teaching or no motivation in *Hettstedt* to calculate load as “load percentage” as Petitioner suggests. Petitioner has not met its burden or provided the necessary evidentiary support for Ground 2, or that cures the deficiencies of *Hettstedt* with respect to claims 1-3 as set forth in Sections V.A.1.a-g.

3. Ground 3: *Hettstedt* in view of *Sabat ’552* fails to render claims 1-12 obvious

Petitioner has not shown a reasonable likelihood of success of Ground 3 rendering claims 1-12 obvious. Specifically, *Hettstedt* and *Sabat ’552* fail to disclose, teach, or suggest each and every element of the challenged claims.

a. *Hettstedt* in view of *Sabat '552* fails to cure the deficiencies of claims 1-3

Petitioner asserts that claims 1-3 are obvious over *Hettstedt* in view of *Sabat '552* "for the reasons discussed above in Grounds 1 and 2." (Pet. at 39). But Grounds 1-2 did not involve *Sabat '552*, and Petitioner has not met its burden to show how *Sabat '552* is to be applied to claims 1-3 to cure deficiencies set forth in Sections V.A.1-2. (Pet. at 3). Therefore, claims 1-3 are not obvious over *Hettstedt* in view of *Sabat '552.*

b. *Hettstedt* in view of *Sabat '552* fails to teach, disclose, or suggest "wherein the at least one digital access unit comprises a first digital access unit configured to communicate with each other via a first optical cable"

Claim 4 recites "wherein the at least one digital access unit comprises a first digital access unit and a second digital access unit configured to communicate with each other via a first optical cable." (Ex. 1001 at 13:30-34). Petitioner admits that *Hettstedt* fails to disclose two CMUs, or a digital access unit (DAU) comprising a first DAU and a second DAU. (Pet. at 28). Petitioner relies on *Sabat '552* to combine with *Hettstedt* to allege coupling two CMUs together because Sabat '552 discloses coupling hub sites together. (Pet. at 29-30). Petitioner also asserts that a CMU in *Hettstedt* corresponds to a hub in *Sabat '552*. Hettstedt, however, in FIG. 5 (reproduced below) already discloses a hub – "**RF HUB RFH**." (Ex. 1005 at

5:51-52) (emphasis added). A POSA reviewing *Hettstedt* would not consider a CMU as a hub because it describes RFH as a hub.

Hettstedt (Ex.1005) FIG. 5
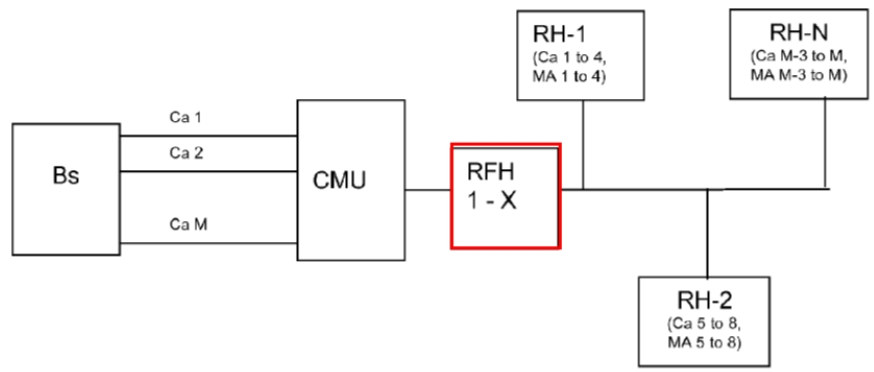

Even if *Sabat* '552 discloses multiple hubs, a POSA would only be motivated to use multiple RFHs in *Hettstedt*—not multiple CMUs. In view of this improper motivation, there is no basis to combine *Sabat '552* with *Hettstedt*.

Moreover, the proposed combination does not disclose or suggest a DAU having a first digital access unit and a second digital access unit configured to communicate with each other via a first optical cable. Accordingly, Petitioner cannot show a reasonable likelihood to succeed on Ground 3.

4. Ground 4: *Hettstedt* in view of *Sabat '552* and *UMTS Standard* fails to render claims 1-12 obvious

As noted above in Sections V.A.1-3, *Hettstedt* and *Sabat '552* fail to disclose, teach, and suggest the missing elements in claims 1-12. The *UMTS Standard* is equally deficient in showing those missing elements. First, Petitioner has failed to meet its burden to offer the necessary evidentiary proof that the *UMTS Standard* (Ex. 1006) is a printed publication as explained above in Secondary References section III.B.2. Reliance by its expert identifying a date on the document is insufficient and hearsay. (Ex. 1003 at ¶103).

Nevertheless, Petitioner refers to "load value" in the alleged *UMTS standard* that states: "The Load Value IE contains the total load on the measured object **relative to the maximum** planned load for both the uplink and downlink" (Pet. at 39) – which further supports Patent Owner's construction for "load percentage." It is clear that neither "load value" nor "load percentage" are disclosed in *Hettstedt* or *Sabat '552*, and Petitioner fails to provide a motivation for why a POSA would use load value from the *UMTS standard* in *Hettstedt* except for Petitioner's argument that load value has been described in an alleged printed publication. Accordingly, Petitioner has failed to meet its burden for Ground 4.

B. Grounds 5-8: *Oh* Fails to Support Obviousness of Any Challenged Claim

As with *Hettstedt*, Petitioner's obviousness combinations based on *Oh* also fail in Grounds 5-8 because *Oh* does not disclose key claim elements—namely, (1) "configuring"/"reconfiguring," (2) "determining load percentage", and (3) "increasing or decreasing the number of carriers in the respective subset of the plurality of carriers based on the load percentage." Petitioner does not identify these elements in any of the asserted secondary references with sufficient particularity. Petitioner also does not specify its obviousness grounds with particularity and does not articulate a motivation to combine *Oh* with any of the secondary references.

1. Ground 5: *Oh* in combination with *Scheinert* fails to render claims 1 and 2 obvious

a. *Oh* in view of *Scheinert* does not disclose "configuring each remote radio unit to receive or transmit a respective subset of the plurality of carriers"

The '338 patent teaches a remotely configurable radio unit whereby a configuration parameters to the remote radio head can be changed. *See* Section IV.C, *supra*. Yet, despite *Oh*'s leading role in Grounds 5-8, it never mentions configuring any aspect of a remote radio unit.

To show "configuring each remote radio unit" without any supporting disclosure in *Oh*, Petitioner claims that:

> Using a mapping table, the Oh system can add or remove carriers received and transmitted by a remote unit. Oh Fig. 2 (reproduced below with annotations) discloses an example mapping table. . . The hub uses mapping data to correlate the different RAN coverage segments with the IP addresses of different remote . . . by configuring each remote unit with an IP address and using a mapping table, each remote unit can be configured to receive a respective subset of the plurality of carriers.

(Pet. at 45-46). But *Oh* never discusses anything resembling the configuration of remote radio units. *Oh* discusses a system "for routing communication traffic between a radio access network and DAS remote antenna units." (Ex. 1010 at 2:35-36). *Oh* discloses routing controlled by a DAS hub that stores "mapping data," which "correlates the DAS antenna units with the one or more RAN coverage segments." (*Id.* at 2:58-60). Figures 2 and 3 show this concept for mapping data a DAS hub, respectively:

Oh (Ex.1010) FIG. 2	*Oh* (Ex.1010) FIG. 3

DAS MAPPING DATA	
RAN COVERAGE SEGMENT(S)	DAS ANTENNA UNIT IP ADDRESS(ES)
A	xxx.xxx.xxx.1, xxx.xxx.xxx.2, xxx.xxx.xxx.3, xxx.xxx.xxx.6
B	xxx.xxx.xxx.5
C	xxx.xxx.xxx.4

FIG. 2

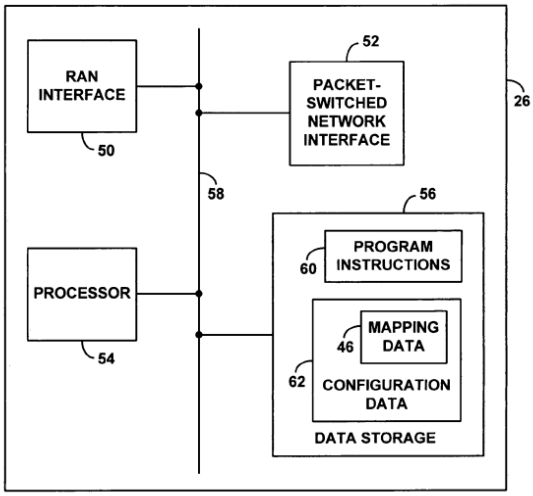

FIG. 3

(*Id.* at Figs. 2, 3). Like *Hettstedt*, *Oh*'s antenna units are pass-through devices that relay signals exactly as they are received. *Oh* does not disclose configuring a remote radio unit and does not disclose setting or altering any aspect of its operation, much less mention the remote radio unit having any adjustable configuration parameters.

Because *Oh* only discusses a DAS hub that routes signals according to a mapping data and is silent about setting or altering any aspect of a remote radio unit, *Oh* cannot disclose, teach or suggest "configuring each remote radio" within the meaning of the '338 patent, let alone "configuring each remote radio unit to receive or transmit a respective subset of the plurality of carriers." The Petition

only points to *Oh* to challenge this claim element and does not offer *Scheinert* to remedy this deficiency in *Oh*. Thus, Ground 5 fails because *Oh* does not disclose the limitation of "configuring each remote radio unit to receive or transmit a respective subset of the plurality of carriers" in the challenged claims.

As such, the Petition has not shown a reasonable likelihood to succeed on Ground 5.

b. *Oh* in view of *Scheinert* does not disclose "reconfiguring each remote radio unit"

The '338 patent's adaptive allocation of radio resources appears in claim 1 as "reconfiguring each remote radio unit." The '338 patent discloses that this reconfiguration occurs by changing the operation of the remote radio unit by, for example, updating its configuration parameters. *See* Claim Construction Section IV.C, *supra.* As discussed above, *Oh* only provides a DAS hub that routes signals according to stored mapping data and does not discuss configuring or setting any operational aspect of the remote radio unit itself. Petitioner argues that:

> The mapping data can be modified by a system administrator or automatically based on real time load measurements to change the distribution of capacity in the DAS by altering the correlations between RAN coverage segments (e.g., RF carriers) and remote unit IP addresses. Ex. 1003 ¶¶130-131; Ex. 1010, 9:44-58 ("based on real-time load measurements"); 9:59-10:9; Fig. 5; 4:46-60. When the mapping table is changed to "add a correlation that did not previously

> exist," the number of carriers allocated to a remote unit's subset is increased. Similarly, when the mapping table is changed to "remove" a correlation, the number of carriers allocated to a remote unit's subset is decreased.

(Pet. at 45). Petitioner therefore only presents changing *Oh*'s mapping table stored in the DAS hub, to route RF communication traffic to different DAS antennas. *Oh* explains:

> Preferably, the mapping data maintained in the DAS data storage will be alterable, so as to allow an administrator or automated system to modify the correlations between RAN coverage segments and DAS antenna unit IP addresses. To facilitate this, for instance, DAS hub may provide a web based user-interface through which an administrator can view and edit the mapping data. In this way, the mapping data can be changed whenever desired, so as to distribute coverage of the RAN in a desired manner throughout the DAS.

(Ex. 1010 at 3:26-36). Simply put, *Oh* discloses a system that can alter its mapping data in the DAS hub for routing RF traffic to the DAS antenna units which are pass-through devices with static configurations. But *Oh* does *not* disclose changing or altering any aspect of the DAS antenna units themselves.

Petitioner has not shown how *Oh* discloses, teaches, or suggests "reconfiguring each remote radio head." Moreover, the Petition does not argue that

Scheinert teaches any aspect of this claim element. As such, the Petition has not shown a reasonable likelihood to succeed on Ground 5.

c. *Oh* in view of *Scheinert* does not disclose "determining a load percentage"

Oh in view of *Scheinert* does not disclose configuring or reconfiguring a remote radio unit, and therefore cannot disclose the more specific step of reconfiguring a remote radio unit by "determining a load percentage."

Oh does not disclose, teach, or suggest "a load percentage" as recited by claim 1. Rather than offer any reasoned analysis of how *Oh* in view of *Scheinert* discloses this claim element, the Petition instead refers only to other parts of the Petition and five paragraphs of the Acampora Decl. (*See* Pet. at 46). Therefore, the discussion of the same issue for *Hettstedt* under Element G applies for *Oh*. Ex. 1003 ¶¶132-136")). Petitioner has failed to meet its burden of showing how *Oh* in view of *Scheinert* is likely to render this claim limitation obvious.

In fact, *Oh* does not discuss a load percentage. *Oh* discloses merely "allowing mapping data 46 to be configured and modified by a system administrator, or perhaps dynamically by an automated system (based on real-time load measurements, event-scheduling data, or one or more other parameters)." (Ex. 1010 at 9:45-49). This, however, does not disclose determining a "load percentage" as required by the '338 patent. In other words, **this does not indicate**

the radio resource capacity (*e.g.*, carriers) still available for the radio unit to use as taught by the '338 patent. Moreover, Petitioner does not provide any argument to define the scope of "real-time load measurements," such as what is measured and whether the measurement can be determined for each individual remote radio unit. Therefore, Petitioner cannot show a reasonable likelihood of success for Ground 5.

d. Petitioner fails to show a motivation to combine *Oh* with *Scheinert*

The Petition relies on *Oh* as a primary reference and *Scheinert* as a secondary reference, for each of Grounds 5-8, but Petitioner provides no motivation to combine these two references. "Obviousness, however, requires 'a reason that would have prompted a person of ordinary skill in the relevant field to combine the elements in the way the claimed new invention does.'" *Johns Manville Corp. v. Knauf Insulation, Inc.*, IPR2018-00827, Paper 9 at 13 (PTAB Oct. 18, 2018) (*quoting KSR Int'l Co. v. Teleflex Inc.*, 550 U.S. 398, 418 (2007)) (informative).

The Board has explained that "[i]t is Petitioner's burden to demonstrate 'that a skilled artisan would have been motivated to combine the teachings of the prior art references to achieve the claimed invention, and that the skilled artisan would have had a reasonable expectation of success in doing so.'" *Id.* at 20 (quoting

Intelligent Bio-Sys., *Inc*. *v*. *Illumina Cambridge Ltd*., 821 F.3d 1359, 1367 (Fed. Cir. 2016)). "An unsupported statement that combining the teachings of the two references would have been 'well within the skill of a POSA,'" because the results "were well-known and predictable' does not meet Petitioner's burden." *Id.* Petitioner failed to meet its burden.

Petitioner offers no argument at all for why a person of skill in the art would look to *Scheinert* to modify *Oh*. The Petition is also silent about why combining *Oh* with *Scheinert* would have a reasonable expectation of success. As a result, Petitioner has failed to meet its burden to provide evidence of a motivation to combine its primary reference *Oh* and secondary reference *Scheinert* in Grounds 5-8. Further, these grounds fail because the references, when combined, still do not disclose, teach, or suggest each and every claim element of the '338 patent.

2. Ground 6: *Oh* in combination with *Hettstedt* and *Scheinert* fails to render claim 3 obvious

Oh in view of *Scheinert* does not disclose, teach, or suggest reconfiguring a remote radio unit by determining "a load percentage." *See* Section V.B.1.c above. Thus, *Oh* in view of *Scheinert* also cannot disclose the more specific step of "determining a load percentage by detecting which carriers are active for each remote radio unit," since it does not even disclose "determining a load percentage."

Petitioner tries to cure this deficiency with the bald assertion that "[t]his limitation, however, is clearly disclosed in *Hettstedt*." (Pet. at 48-49). But *Hettstedt* has no such disclosure. Here, Petitioner's citation to *Hettstedt* for its "air interface activity detection and interference sensing," which clearly does not disclose the claim limitation of "determining a load percentage." Indeed, *Hettstedt* does not disclose "a load percentage" at all, and therefore cannot disclose "determining a load percentage by detecting which carriers are active for each radio unit." *See* Section V.A.1.c above.

3. Ground 7: *Oh* in combination with *Scheinert* in view of *Sabat '552* fails to render claims 1, 2, and 4-12 obvious

Petitioner does not offer Sabat '552 for claims 1 and 2, and instead rests on its previous arguments for the *Oh-Scheinert* combination. As such, for the reasons discussed above, Petitioner has failed to show a reasonable likelihood of success as to claims 1-2 of Ground 7.

As for claim 4, and the remainder of the claims that depend upon it, *Oh* and *Scheinert* in view of *Sabat '552* do not disclose, teach, or suggest a DAU that "comprises a first digital access unit and a second digital access unit configured to communicate with each other via a first optical cable." Petitioner asserts that:

> *Oh* and *Scheinert* combined do not disclose using multiple DAS hubs that communicate with each other via optical cable as recited by claim 4. This idea, however, was already taught in *Sabat '552*. Ex. 1008,

> Fig. 1; Fig. 3; 6:55-61. *See also* Ground 3. *Sabat*'s Hub 35 corresponds to *Oh*'s Hub.

(Pet. at 50). The Petition further asserts that *Sabat '552* discloses one or more hubs 35 that resemble *Oh*'s Hub. But *Sabat '552* does not suggest distributing the functions of *Oh*'s Hub over one or more units. *Oh* teaches a Hub configured to store "mapping data" "for use in subsequently routing communication traffic between RAN coverage segments and DAS antenna unit IP addresses." (Ex. 1010 at 9:62-64). There is no disclosure of how this mapping data might be split across multiple hubs, and no suggestion that it is even possible.

Sabat '552, however, says nothing of these functions when discussing its hub 35. Rather, *Sabat '552*, like Oh, discusses a centralized control hub "NMS 60 [that] distributes individual alarms to the appropriate tenants, and maintains secure transmission for each tenant, whereas each tenant 15 is provided access to only their own respective System, for monitoring and control purposes." (Ex. 1008 at 9:36-39). *Sabat '552*'s Figure 1, annotated below, shows that NMS 60 is a centralized system, and *Sabat '552* does not teach splitting the NMS 60 into one or more units:

Sabat '552 (Ex.1008) FIG. 1

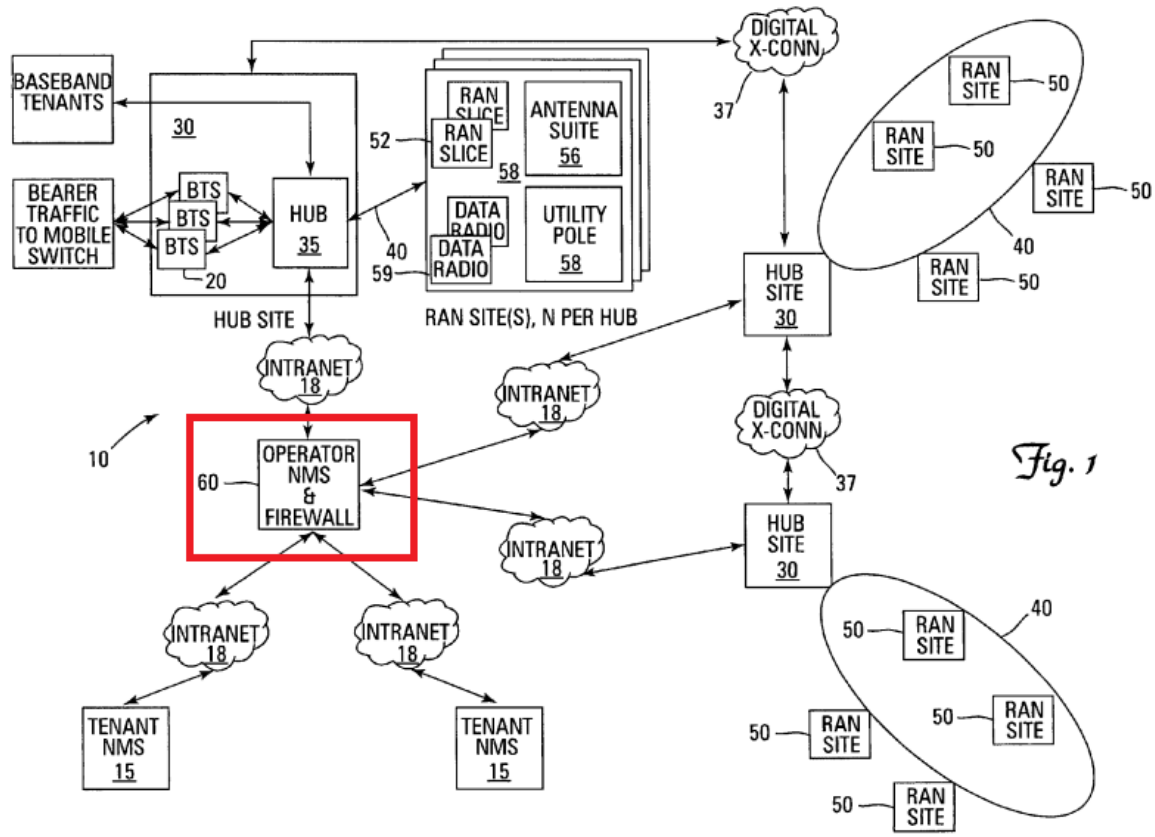

Because *Sabat '552* does not discuss having core functions across one or more units, it does not disclose, teach, or suggest a DAU that "comprises a first digital access unit and a second digital access unit configured to communicate with each other via a first optical cable." Therefore, Petitioner has failed to show a reasonable likelihood of success for Ground 7.

4. Ground 8: *Oh* in combination with *Scheinert*, *Hettstedt*, and *Sabat '552*, in view of the *UMTS Standard* fails to render claims 1-12 obvious

Ground 8 seeks to challenge claims 1-12 as obvious over Scheinert, *Hettstedt*, and *Sabat '552* and in view of the *UMTS Standard*. But Petitioner rests on its previous arguments in Grounds 5-7 for the *Scheinert*, *Hettstedt*, and *Sabat '552* combination. As for the claim limitation of "determining a load percentage," Petitioner combines an additional reference—the *UMTS Standard*—and offers the same argument it made in Ground 4 (Pet. at 59). Petitioner then asserts without support that "it would have been obvious" to combine the other asserted references with the *UMTS Standard* and that it "expressly defines" a load percentage.

First, Petitioner has failed to meet its burden to offer the necessary evidentiary proof that the *UMTS Standard* (Ex. 1006) is a printed publication as explained above in Secondary References section III.B.2. Moreover, Ground 8 says nothing about what claim elements each reference discloses, how to apply "*Oh, Scheinert, Hettstedt, Sabat '552* in light of the UMTS Standard" to claims 1-12, or a motivation to combine the five references. Further muddling this ground, the Petition refers to its discussions in Ground 4, which also lacks any particularity.

The Petition again asks the Board to apply the asserted art to the claims without meeting its burden to offer a clear path of how to do so. As such, and for

the reasons discussed above in Grounds 5-7, Petitioner has also failed to show a reasonable likelihood of success on Ground 8.

C. Grounds 9-12: *Wu* Fails to Support Anticipation or Obviousness of Any Challenged Claim

Petitioner does demonstrate a reasonable likelihood that *Wu* alone discloses, teaches, or suggests each claim element of any challenged claim. Petitioner relies on *Wu* for both its anticipation arguments in Ground 9 and as the primary reference for its obviousness arguments in Grounds 10-12. But *Wu* alone or in combination with others does not disclose configuring or reconfiguring the remote radio unit.

1. Ground 9: *Wu* fails to anticipate Claims 1-3

a. *Wu* does not disclose "configuring each remote radio unit to receive or transmit a respective subset of the plurality of carriers"

Wu does not disclose "configuring each remote radio unit to receive or transmit a respective subset of the plurality of carriers." The '338 patent discloses a remote radio unit configurable by changing an aspect of the remote radio unit, such as its configuration parameters. *See* Claim Construction Section IV.C, *supra*.

Petitioner asserts *Wu* as the primary reference for Grounds 9-12, yet *Wu* does not configure any operational aspect of a remote radio unit itself for transmitting a subset of carriers as required by the challenged claims.

To show "configuring each remote radio unit," the Petition only asserts:

> Wu's system provides fine grained control over carriers from a single band or multiple bands by splitting the carrier from their bands and routing subsets to RTUs. Wu's system employs a switch in combination with host units 250 that together can route any or all of the carriers received from the RF signal source to any RTU. Each RTU is configured to receive subsets of carriers in the downlink and converts to analog RF for transmission to its coverage area ("cell region"). Ex. 1003 ¶¶252-259.

(Pet. at 69). But *Wu* never discusses anything resembling the configuration of remote radio units for transmitting subsets of carriers. *Wu* discusses "a carrier channel distribution system [that] can route individual carrier channels to Remote Transceiver Units (RTUs)." (Ex. 1022 at [0011]). *Wu*'s "carrier channels can be routed according to a routing policy that can be reconfigured as desired." (*Id*). Figure 2 shows *Wu*'s routing policy:

Wu (Ex.1022) FIG. 1
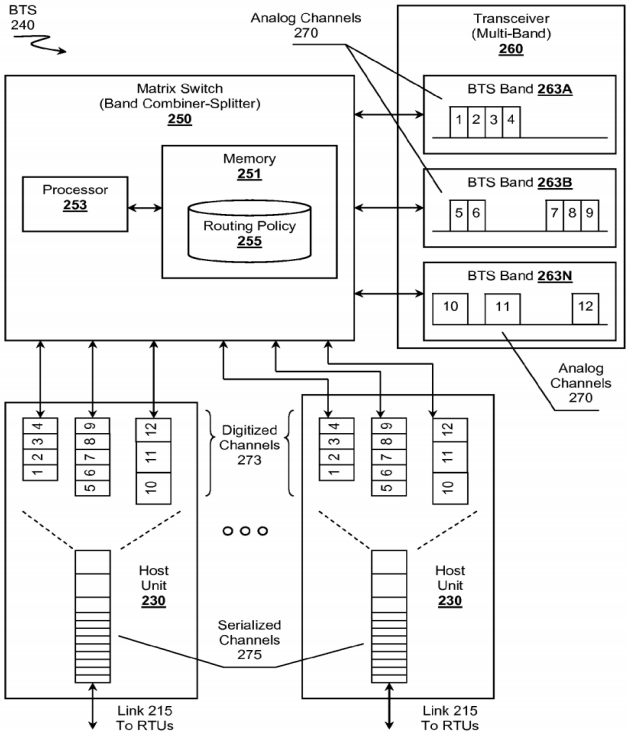

Figure 2

"Routing policy 255 can comprises one or more rules that govern behavior of switch 250 with respect to how analog channels 270 should be routed to host units 230 for further distribution to RTUs. Policy 255 . . . can be executed within processor 253 that configures switch 250 to properly route the channels." (*Id*. at [0040]).

In this respect, *Wu* is similar to *Oh* and *Hettstedt* and likewise does not anticipate the '338 patent because it discusses a system that routes signals according to a mapping table or routing policy but does not configure or reconfigure radio units' radio resources. *See* Sections III.A and V.A-B, *supra*. Wu also does not discuss configuring the *radio unit* to transmit and receive certain subsets of carriers. *Wu* does not disclose setting or altering any aspect of the radio unit, such as its configuration parameters, to achieve this goal. *Wu* only discusses a routing policy stored in a matrix switch. Like *Oh* and *Hettstedt*, the Remote Transceiver Units (RTUs) in *Wu* are pass-through devices that merely relay signals exactly as they are received.

Moreover, Petitioner focuses much of its argument here citing to excerpts of *Wu* that are directed to the configuration ***of the host unit***, not the RTU (*i.e.* the remote unit), and relies on a statement that the RTU can "mirror a host unit's functionality" based on its bi-directional nature. (Pet. 69-70). However, Petitioner's argument is hollow, lacking support, and should be rejected.

Wu describes certain specific functionalities that both the host unit and the RTU can perform for their bi-directional nature, but none involve configuration of radio resources at remote radio units. For example, the "host unit 230 can operate bi-directionally where it can receive serialized channels 275 from an RTU, de-serialize the channels back into digitized channel 273, restore analog channels 270,

and send the signals of the channels back to switch 250 within their proper channels 270." (Ex. 1022 at [0049]). Also, "RTU 310 receives serialized channels 375 from a host unit over link 315. RTU employs a reverse process as taken by host units . . . RTU 310 de-serializes serialized channels 375 to obtain digitized channels 373. Digitized channels can be converted back into analog channels 370." (*Id*. at [0050]). These are the basic functionalities that are mirrored in both the host unit and the RTUs for their bi-directional operation.

However, functions such as those relating to the routing policies for optimizing carrier channels are entirely executed by the host unit as *Wu* clearly describes that the host unit is configured for those tasks. (*Id*. at [0049] ("[T]he host unit 230 are configured to optimally digitize desirable channels as opposed to a complete band.")). *Wu* simply does not disclose configuration of at the RTU for transmitting a subset of the plurality of carriers.

Because *Wu* only discusses a DAS hub that routes signals according to a routing policy and has no discussion about setting or altering any aspect of the RTU for transmitting a subset of the plurality of carriers, *Wu* cannot disclose, teach or suggest "configuring each remote radio" within the meaning of the '338 patent, let alone "configuring each remote radio unit to receive or transmit a respective subset of the plurality of carriers." Each of Grounds 9-12 fail as *Wu* does not disclose this claim limitation.

b. *Wu* does not disclose "reconfiguring each remote radio unit by determining a load percentage for each remote radio unit"

Wu does not disclose "reconfiguring each remote radio unit" for the same reasons discussed above in Section V.C.1.a, *i.e.*, it does not disclose configuring the remote radio units themselves. Moreover, *Wu* does not disclose reconfiguring each remote radio unit which includes the step of "determining a load percentage for each remote radio unit" as required by the challenged claims. However, Wu does not disclose a "load percentage," much less determining a load percentage of a radio unit.

Petitioner points to *Wu*'s description of its routing policy based on traffic load and load balancing of the system in general, *e.g.*, at the base station (Pet. at 72), but offers no particular support for the disclosure of determining a "load percentage" of each remote radio unit or in accordance with how a POSA would understand the term "load percentage" In the context of the '338 patent. Pointing generally to load characteristics or load balancing is not sufficient to show that Wu discloses "an amount of active capacity utilized by a remote radio unit relative to the maximum amount of active capacity allocated it." Critically, *Wu* does not indicate the radio resource capacity (*e.g.*, carriers) available to the radio unit as does the load percentage taught by the '338 patent. Therefore, Wu does not disclose this claim limitation.

2. Ground 10: *Wu* alone or in combination with the *UMTS Standard* fails to render claim 1-3 obvious

As noted above in Section V.C.1, *Wu* by itself fails to disclose, teach, or suggest the missing elements in claims 1-3. Petitioner tries to fill in *Wu*'s deficiency regarding a "load percentage" with the *UMTS Standard*. As noted above, Petitioner has not met its burden to show that this reference is a printed publication. Nevertheless, Petitioner points to *UMTS* by referring to "load value" in the alleged *UMTS standard* that states: "The Load Value IE contains the total load on the measured object **relative to the maximum** planned load for both the uplink and downlink" (Pet. at 39). But the terms "load value" and "load percentage" are not mentioned in *Wu*, and Petitioner fails to provide a motivation for why a POSA would modify *Wu* to utilize a load value measured at a radio unit except for its bare argument that load value has been purportedly described in another document (the UMTS standard) that may or may not be a printed publication, let alone authentic. This not sufficient to show a proper basis for combining the references. Accordingly, Petitioner has failed to meet its burden for Ground 10.

3. Ground 11: *Wu* in combination with the *UMTS Standard* in view of *Sabat '552* fails to render claims 1-12 obvious

Ground 11 seeks to challenge claims 1-12 as obvious over *Wu* and the *UMTS Standard* in view of *Sabat '552*. But Petitioner rests on its previous

arguments in Grounds 9-10 with respect to claims 1-3 for *Wu* alone or in combination with the *UMTS Standard*. Likewise, for the reasons stated above, *Wu* in combination with the *UMTS Standard* fail to disclose each and every element of claims 1-3, including the fact that Petitioner has not met its burden to show that this reference is a printed publication.

Similarly, dependent claims 4-12, which depend upon claim 1 are not obvious over the combination of the *Wu* and the *UMTS Standard* in view of *Sabat '552*. For claims 4-8, Petitioner makes similar arguments for *Wu* here as it did with *Hettestedt* for why a POSA would have allegedly combine *Sabat '552* to yield two digital access units configured to communicate with each other via an optical cable. For the same reasons as discussed above in Section V.A.4 for *Hettstedt*, Petitioner fails to offer a proper basis for combining *Sabat '552* with *Wu* and the *UMTS Standard*.

Similarly, with respect to claims 9-12, Petitioner directly refers to its arguments in Ground 3 (Pet. at 76). Petitioner asks the Board to look at the arguments of *Hettstedt* in view of *Sabat '552* and apply those in identical fashion to the combination of *Wu* and *Sabat '552* without offering any particularized arguments for how to combine *Wu* and *Sabat '552* and apply them to the challenged claims. This is not sufficient for Petitioner to meet its burden, and thus Ground 11 should be denied.

4. Ground 12: *Wu* in combination with *Sabat '552* and the *UMTS Standard* in view of *Sabat '426* fails to render claims 1-12 obvious

Ground 12 seeks to challenge claims 1-12 as obvious over *Wu, Sabat '552, and UMTS,* in light of *Sabat '426* in an apparent "kitchen sink" ground for unpatentability. But the Petition does not specify how to apply the asserted references to the claims, and only provides that "[i]f Patent Owner attempts to argue that the above Grounds based on Wu (Grounds 9-11) fail to disclose a digital access 'unit' because the matrix switch 250 and units 230 in Wu are shown in Figure 2 in different 'boxes,' then combining these into one unit would have been obvious based on *Sabat '426* (Ex. 1021)." (Pet. at 84). The Petition vaguely references earlier sections of the Petition that also fail for the reasons stated above. At the bottom of the rabbit hole, Petitioner never explains how or why this combination discloses, teaches, or suggests the challenged claims. Also, as noted above, Petitioner has not met its burden to show that this reference is a printed publication.

Petitioner also does not show a sufficient motivation to combine *Wu, Sabat '552, UMTS,* and *Sabat '426*. The Petition only offers that "[a] POSA would have been motivated to do so, for example, to reduce the system complexity, reduce installation costs by simplifying installation, and minimize errors in coupling

separate components during installation" yet remains silent about why these four pieces of art would be combined. (Pet. at 87).

Petitioner therefore neither shows how the asserted combination reads on each claim element nor why a person of ordinary skill in the art would combine the references. Petitioner fails to show a reasonable likelihood of success on Ground 12.

D. Petitioner's Scattershot Approach, Alleging Many Vague Grounds with Insufficient Particularity, Calls for Discretionary Denial under 35 U.S.C. § 312(a)(3)

The Petition's overall approach of alleging a dozen grounds of invalidity without sufficiently developing any one of them merits a discretionary denial from the Board, lest it be compelled to institute on all grounds and have to render Final Written Decision in several insufficiently developed theories.

Petitioners bear the burden of providing, from the onset, a Petition that identifies, with particularity, "the grounds on which the challenge to each claim is based." *Adaptics*, IPR2018-01596 at 16. "Because the Board's practice, in light of SAS, is to institute on all grounds asserted in a petition, the Board may consider whether a lack of particularly as to one or more of the asserted grounds justifies denial of an entire petition." *Id.* at 17.

Each of Grounds 3, 4, 5, 7, 8, 9, 10, 11, and 12 lack guidance on how Petitioner challenges the claims. Instead, Petitioner only offers vague references to

other parts of the Petition that often only offer vague references themselves. The ambiguity in each of these claims on how to apply the asserted art against the challenged claims leads to many and voluminous grounds supported by zero evidence and analysis. Besides ambiguities surrounding the prior art, some grounds look to import by reference substantial sections of the Acampora Decl. that in turn references unasserted pieces of art. This leads to even more grounds unsupported by analysis or evidence. Compounding all of this, Petitioner's references to a specific claim element often does not repeat that element, leaving the reader to check the Petition's appendix.

Because most of the Grounds in this Petition lack detail about how the prior art reads on the claims, what motivation to combine applies, and what evidence supports Petitioner's reading of its asserted art, this Petition does not satisfy the particularity requirements of 35 U.S.C. § 312(a)(3) and leads to voluminous and excessive grounds. "[I]n the interests of efficient administration of the Office and integrity of the patent system and as a matter of procedural fairness to Patent Owner, the entire petition should be denied under 35 U.S.C. § 314(a)." *Adaptics*, 2018-01596 at 24.

VI. CONCLUSION

Petitioner has not established a reasonable likelihood that it will prevail on Grounds 1-12 to establish that claims 1-12 of the ’338 patent are unpatentable. Accordingly, Patent Owner requests that the Board deny institution of *inter partes* review of the ’338 patent.

Respectfully Submitted,

Dated: November 19, 2020

/s/ David D. Schumann

David D. Schumann (Reg. No. 53,569)
Michael C. Saunders (Reg No. 75,044)
S.H. Michael Kim (Reg. No. 40,450)
Cliff Win, Jr. (*pro hac vice applied for*)
Folio Law Group (PLLC)
14512 Edgewater Lane NE
Lake Forest Park, WA 98155
Tel: (206) 512-9051

(Case No. IPR2020-01466) *Attorneys for Petitioner*

CERTIFICATION UNDER 37 C.F.R. § 42.24(d)

Under the provisions of 37 C.F.R. § 42.4(d), the undersigned hereby certifies that the word count for all portions of the foregoing Petition for *Inter Partes* Review totals 13,341 words per Microsoft Word, which complies with the requirement of 14,000 words allowed under 37 C.F.R. § 42.24(b)(1).

Respectfully submitted,

Date: November 19, 2020

By: */David D. Schumann/*

David D. Schumann (Reg. No. 53,569)
Folio Law Group PLLC
Email: david.schumann@foliolaw.com
Tel: (415) 238-6701

Attorney for Patent Owner

CERTIFICATE OF SERVICE

As authorized by Petitioner's Mandatory Notice, I hereby certify that on November 19, 2020, a copy of this document has been served in its entirety by electronic mail on Petitioner's lead and backup counsel.

Philip P. Caspers
pcaspers@carlsoncaspers.com
Samuel A. Hamer
shamer@carlsoncaspers.com

Date: November 19, 2020

By: */David D. Schumann/*

David D. Schumann (Reg. No. 53,569)
Folio Law Group PLLC
Email: david.schumann@foliolaw.com
Tel: (415) 238-6701

Attorney for Patent Owner