UNITED STATES PATENT AND TRADEMARK OFFICE

BEFORE THE PATENT TRIAL AND APPEAL BOARD

JOHN MEZZALINGUA ASSOCIATES, LLC,
Petitioner,

v.

DALI WIRELESS, INC.,
Patent Owner.

Case IPR2020-01430
Patent 10,334,499

PATENT OWNER'S PRELIMINARY RESPONSE
UNDER 35 U.S.C. §§ 311-19 AND 37 C.F.R. § 41.100, ET SEQ.

TABLE OF CONTENTS

I. INTRODUCTION 1

II. THE ’499 PATENT IMPROVED WIRELESS CAPACITY FOR RADIO UNITS IN A DISTRIBUTED ANTENNA SYSTEM (DAS) 4

A. Overview 4

B. Challenged Claims 7

C. Cited References and Prior Art 9

1. *Oh* Reference..... 9

2. *Cannon* Reference..... 11

3. *Fischer* Reference 12

D. Notice of Allowance.....13

III. CLAIM CONSTRUCTION 13

A. Person of Ordinary Skill in the Art (POSA) 14

B. “Signal Sources” (claims 1, 4, 8, 11, 14 and 16) 14

C. “Radio Resources” (Claims 1-2, 4, 8-9, 11, 14, 16 and 19).....16

D. “Baseband Unit” (Claims 1, 2, 6, 8-9, 12, 14 and 19) 19

E. “Baseband unit is configured to send a digital representation of a [first/second] set of radio resources” (Claims 1 and 8) 22

F. Petitioner’s Claim Constructions Should be Rejected as Contrary to Proposed Constructions in Pending Parallel District Court 24

IV. THE BOARD SHOULD EXERCISE ITS DISCRETION AND REJECT GROUNDS 1-3 RELYING ON THE SAME PRIOR ART PRESENTED DURING PROSECUTION OF THE ’499 PATENT.....25

A. Factors (a) through (d) justify denying institution of Grounds 1-3 26

1. *Oh* and *Cannon* Refer to the Same Prior Art Presented During Prosecution of the ’499 Patent and Not Materially Different 26

2. *Fischer* is Cumulative to *Fischer ’242* Considered During Prosecution of ’499 Patent 27

B. Factors (e) and (f) justify denying institution of Grounds 1-3.....29

V. THE PETITION FAILED TO SHOW THAT GROUNDS 1-3 HAVE A REASONABLE LIKELIHOOD OF SUCCESS 30

A. Ground 1: *Oh* Fails to Disclose Each and Every Element to Support Anticipation of the Challenged Claims 31

1. *Oh* fails to disclose a "baseband unit" 31

2. *Oh* fails to disclose "wherein the baseband unit is configured to send a digital representation of a first set of radio resources to the first remote unit at a first point in time" 34

3. *Oh* fails to disclose "wherein the baseband unit is configured to send a digital representation of a second set of radio resources to the first remote unit a second point in time" 41

4. *Oh* fails to disclose "wherein a number of radio resources in the first set of radio resources is different from a number of radio resources in the second set of radio resources" 42

5. *Oh* fails to disclose "wherein the first set of radio resources is a subset of the plurality of radio resources and includes at least some radio resources from the second signal source" 43

6. *Oh* fails to disclose a "baseband controller" 44

B. Ground 2: *Oh* in view of *Cannon* Fails to Support Obviousness Over the Challenged Claims 45

1. *Oh* and *Cannon* Fail to Disclose or Suggest Each and Every Claim Element 45

2. Evidentiary Record Does Not Support a Motivation to Combine *Oh* and *Cannon* 46

3. Petitioner Ignores the *Graham* Factors in Ground 2 49

C. Ground 3: *Oh* in view of *Fischer* Fails to Render Challenged Claims Obvious 50

1. *Oh* and *Fischer Fails* to Disclose or Suggest Each and Every Claim Element 51

2. Evidentiary Record Does not Support a Motivation to Combine *Oh* and *Fischer* 51

3. Petitioner Ignores the *Graham* Factors in Ground 3 53

VI. CONCLUSION 54

TABLE OF AUTHORITIES

Cases

Becton, *Dickinson & Co*. *v*. *B*. *Braun Melsungen AG*,

IPR2017-01586, Paper 8 at 17-18 (PTAB Dec. 15, 2017) 25, 28

ClearH20, Inc. v. CEVA Animal Health Inc.,

IPR2020-00039, Paper 21 at 24-25 (PTAB Mar. 18, 2020).....25

Graham v. *John Deere Co* 48, 49, 50, 52

Intelligent Bio-Sys., *Inc*. *v*. *Illumina Cambridge Ltd*.,

821 F.3d 1359, 1367 (Fed. Cir. 2016) 46

Johns Manville Corp. *v*. *Knauf Insulation, Inc*.,

IPR2018-00827, Paper 9 at 13 (PTAB Oct. 18, 2018) (*quoting KSR Int'l Co. v. Teleflex Inc.*, 550 U.S. 398, 418 (2007)) (informative). 46

Nidec Motor Corp. v. Zhongshan Broad Ocean Motor Co.,

868 F.3d 1013, 1017 (Fed. Cir. 2017) 22

Orthopediatrics Corp. *v*. *K2M*, *Inc*.,

IPR2018-01548, Paper 9 at 11 (PTAB Mar. 1, 2019) 23, 24

Phillips v. AWH Corp.,

415 F.3d 1303 (Fed. Cir. 2005) (*en banc*) 14, 17, 21

Wilson, 424 F.2d at 1385 ..... 20, 32

Statutes

35 U.S.C. § 103 48

35 U.S.C. § 325(d) 25, 28, 30

Rules

37 C.F.R. § 42.100(b) 14

37 C.F.R. § 42.104(b)(3).....14

37 C.F.R. § 42.104(b)(4)..... 3, 30

37 C.F.R. § 42.108(c).....1

37 C.F.R. § 42.6 17

Exhibit List

Exhibit No.	Exhibit Description
2002	File History of U.S. Patent No. 10,334,499 ("'499 File History")
2003	U.S. Patent No. 8,532,242 ("Fischer '242")
2004	U.S. Provisional Application No. 61/439,940
2005	Dali's Opening Claim Construction Brief in the District Court of Delaware (C.A. No. 19-2367-RGA)
2006	Joint Claim Construction Chart (C.A. No. 19-2367-RGA)

I. INTRODUCTION

Petitioner has failed to demonstrate a reasonable likelihood that it would prevail in showing any of the challenged claims 1-19 of U.S. Patent No. 10,334,499 ("the '499 patent") (Ex. 1001) unpatentable under 37 C.F.R. § 42.108(c). Indeed, on both substantive and procedural grounds, the Petition falls considerably short of the threshold to merit institution.

First, the '499 patent discloses systems and methods that improve wireless capacity at the front end (*i.e.*, at the digital remote units ("DRUs")) in a distributed antenna system ("DAS"). For example, users of wireless devices may gravitate to an office cafeteria during lunchtime, which may overload remote units in the cafeteria. (Ex. 1001 at 6:21-30). The '499 patent claims, *inter alia*, a "baseband unit" that is "configured to send a digital representation of a [first/second] set of radio resources" to a remote unit. (Ex. 1001 at 14:15-24). The baseband unit of the '499 patent allocates radio resources to digital remote units throughout a DAS to adapt to dynamic load conditions on a particular remote unit—*i.e.*, the overloaded cafeteria remote unit at lunchtime. To implement this allocation, the baseband unit communicates configuration information to remote units indicating which sets of radio resources (*e.g.*, carrier frequencies, codes, or time slots) to use as needed. (*Id.* at 12:5-9, 14:15-24, 15:1-10).

Petitioner relies on U.S. Patent No. 7,286,507 (*Oh*) (Ex. 1003) as its primary reference for each of Grounds 1-3, but *Oh* does not even mention "baseband" or disclose a "baseband unit" or communicating configuration information to a remote unit indicating which sets of "radio resources" to use. Petitioner refers to a DAS hub in *Oh*, as the claimed "baseband unit," but that DAS hub simply routes traffic using mapping data in a table for correlating a coverage segment of a respective base station to an IP address of a DAS antenna unit. DAS antenna units in *Oh* are merely pass-through devices with static configuration– as *Oh* does not disclose any adaptive adjustments to the antenna units at all. There is simply no communication of configuration information to remote units in *Oh* that reconfigures them or indicates which sets of "radio resources" to use. In view of these deficiencies in *Oh*, the Board should reject Grounds 1-3 in the Petition and deny institution. The secondary references to U.S. Patent Appl. Publ. No. 2010/0177760 (*Cannon*) (Ex. 1004) and U.S. Patent Appl. Publ. No. 2007/0008939 (*Fischer*) (Ex. 1005) do not cure what is missing in *Oh*.

Second, Grounds 1-3 should be rejected as redundant. The primary reference to *Oh* in support of Grounds 1-3, and the secondary reference to *Cannon* in support of Ground 2 were both considered and dismissed by the Patent Office during prosecution of the '499 patent. ('499 File History) (Ex. 2002 at 08/09/18 IDS). Another reference considered by the Patent Office was U.S. Patent No. 8,532,242

("*Fischer '242*") (Ex. 2003), which incorporated *Fischer* in its entirety. Thus, Petitioner's use of *Fischer* in support of Ground 3 is cumulative. Petitioner did not even indicate to the Board that these references were cited during prosecution.

In allowing the claims, the examiner expressly identified features of the '499 patent missing in the cited references such as, *e.g.*, "wherein the *baseband unit* is configured to *send a digital representation of a second set of radio resources* to the first digital remote unit." (Ex. 2002 at 08/08/19 Notice of Allowance). Moreover, Petitioner has not identified any material error by the Patent Office and offers nothing more than what the Patent Office already considered.

Third, Petitioner has failed to "specify where each element of the claim is found in the prior art patents or printed publications relied upon." 37 C.F.R. § 42.104(b)(4). Significantly, Petitioner has not specified where the "baseband unit" is disclosed in *Oh*. Instead, Petitioner relies pervasively on conclusory statements in an expert declaration to fill in the holes in *Oh*, which should be rejected in its entirety.

Fourth, Grounds 2 and 3 on obviousness should be rejected as a matter of law for failing to satisfy the *Graham* factors. Specifically, Petitioner offers no evidence or support in the asserted references for its alleged motivation to combine *Cannon* and *Fischer* with *Oh*. In view of these deficiencies, Petitioner has not met its burden

to demonstrate that it would prevail in proving unpatentability of the challenged claims.

II. THE '499 PATENT IMPROVED WIRELESS CAPACITY FOR REMOTE UNITS IN A DISTRIBUTED ANTENNA SYSTEM (DAS)

A. Overview

The '499 patent has a priority date of February 7, 2011 based on U.S. Provisional Application No. 61/439,940 (Ex. 2004). The '499 patent discloses a reconfigurable distributed antenna system (DAS) that improves wireless capacity of digital remote units (DRUs) within a DAS. (Ex. 1001 at 2:60-64, 4:27-31). Specifically, the '499 patent addresses efficiency and radio capacity issues for DRUs at the front end (*i.e.* at the DRU) by changing or sending configuration information such as digital representations of sets of radio resources to the DRUs. These digital representations indicate which radio resources the DRUs may use for accommodating an increase or decrease of mobile users at locations within the DAS network.

Referring to FIG. 1 of the '499 patent (shown below), the inventors conceived of a digital access unit ("DAU") (DAU 105) or "baseband unit" for a DAS that receives input signals from one or more signal sources originating at an operator's network. The DAU or baseband unit, then serializes and distributes baseband signals to one or more digital remote units ("DRUs") such as DRUs 125A to 125*k*.

’499 Patent (Ex. 1001) FIG. 1
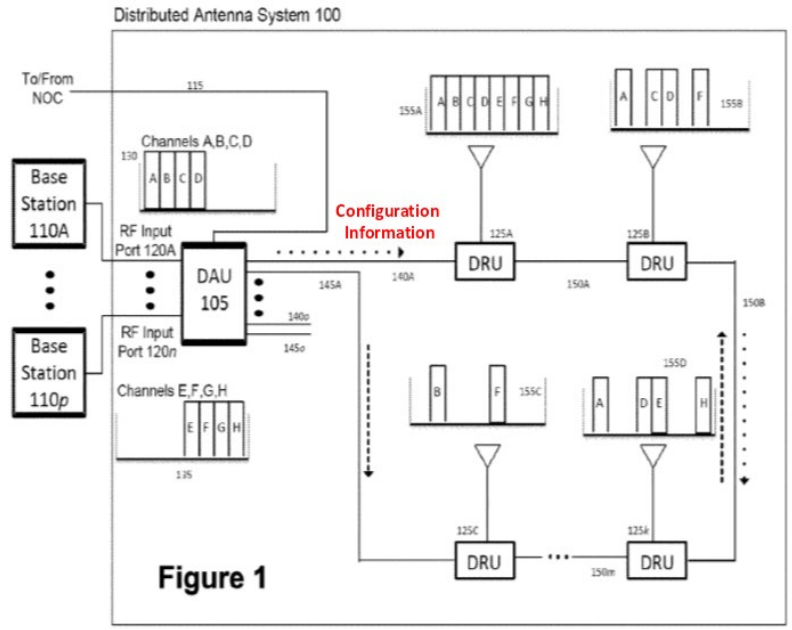

The DAU/baseband units of the invention coordinate communications by "***control[ling] the packet traffic*** of an associated plurality of Digital Remote Units" (Ex. 1001 at 2:25-27) and by assigning "the number of channels received at the each DRU." (Ex. 1001 at 5:28-31). To address capacity issues inside a DAS, the inventors contemplated inefficiency concerns with situations that could overload a digital remote unit (e.g., DRU 125A), while under-utilizing others. For example:

> A possible application for DRU 125A is a cafeteria in an enterprise *building* during the *lunch hour* where *a large number of wireless subscribers are gathered*.

(*Id*. at 6:27-30) (emphasis added). To address load on a particular remote unit, *e.g.*, the overloaded lunchtime cafeteria remote unit, the inventors disclosed a baseband unit or DAU that can allocate additional radio resources to the DRU. For example, to ensure that the DRUs are allocated with sufficient radio resources, the baseband unit (DAU 105) determines and communicates configuration information that indicates "the appropriate amount of radio resources (such as RF carriers, CDMA codes or TDMA time slots) assigned to a particular DRU or group of DRUs to meet desired capacity and throughput objectives." (*Id*. at 12:5-9, 14:15-24, 15:1-10).

Referring to FIG. 7 of the '499 patent (reproduced below), to accomplish this reallocation of radio resources, the '499 patent discloses a DAU monitoring module 710 used in "determining and/or setting the appropriate amount of radio resources (such as RF carriers, CDMA codes or TDMA time slots) assigned to a particular DRU or group of DRUs *to meet desired capacity and throughput objectives*." (*Id*. at 12:5-10). Configuration information is sent by the DAU/baseband unit to DRUs to allocate radio resources as needed. (*Id*. at 5:28-31, 8:12-35; *see also id*. at 12:50-13:2 ("[T]he DAU Management Control module can adaptively modify the system configuration to begin to deploy … additional radio resources (such as RF carriers, CDMA codes and TDMA time slots) for use by a particular DRU which need those radio resources within its coverage area.").

’499 Patent (Ex. 1001) FIG. 7
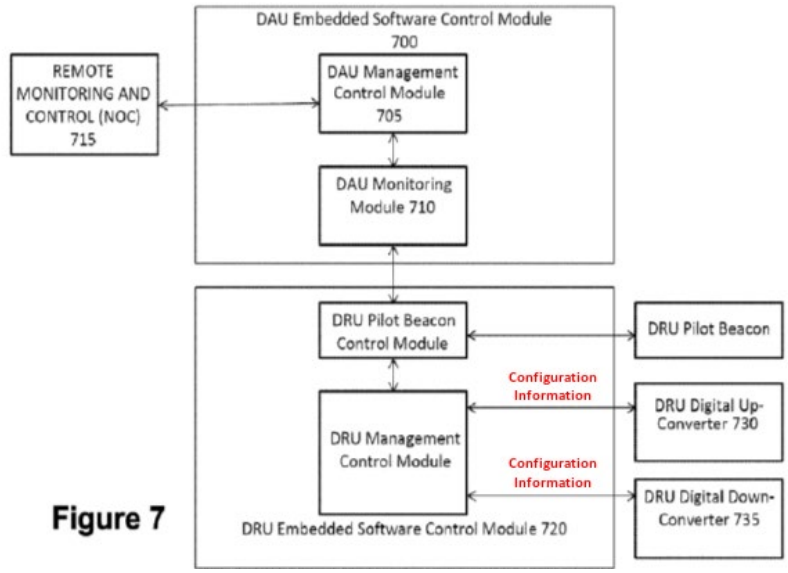

B. Challenged Claims

Petitioner challenges claims 1-19 of the ’499 patent, which includes three independent claims 1, 8 and 14. Claim 1 is representative and reproduced below.

> 1. A system for transporting wireless communications, comprising:
>
> a *baseband unit*;
>
> a plurality of *signal sources*, including at least a first signal source and a second signal source;
>
> a plurality of remote units, including at least a first remote unit and a second remote unit;

> wherein the baseband unit comprises a plurality of interfaces to communicatively couple the baseband unit to the plurality of signal sources;
>
> wherein the baseband unit is configured to receive a plurality of *radio resources* from the first signal source and the second signal source;
>
> wherein the baseband unit is configured to send a digital representation of a first set of radio resources to the first remote unit at a first point in time, the first set of radio resources for transmission at an antenna of the first remote unit;
>
> wherein the baseband unit is configured to send a digital representation of a second set of radio resources to the first remote unit at a second point in time, the second set of radio resources for transmission at the antenna of the first remote unit;
>
> wherein a number of radio resources in the first set of radio resources is different from a number of radio resources in the second set of radio resources; and
>
> wherein the baseband unit is configured to receive digital signals from each of the plurality of remote units.

(Ex. 1001 at 14:2-29). Claims 2-7 depend on the system of claim 1. Claims 8-13 recite a baseband controller and claims 14-19 recite a method for providing digital signals in a DAS. (Ex. 1001 at 14:30-16:39).

C. Cited References and Prior Art

1. *Oh* Reference

On August 9, 2018, Patent Owner submitted *Oh* for consideration by the Examiner in the Information Disclosure Statement ("8/9/18 IDS"). (Ex. 2002 at 8/8/18 IDS, 3). In the Office Action mailed February 21, 2019 ("2/21/19 OA"), the Examiner considered the references in the 8/19/18 IDS and indicated allowability of the '499 patent claims over the cited references. (Ex. 2002 at 2/21/19 OA, 2-3, 8-9). In the Notice of Allowance mailed August 8, 2019 ("8/9/19 OA"), the Examiner formally allowed the '499 patent claims providing the same reasons for allowance stated in the 2/21/19 OA. (Ex. 2002 at 8/9/19 OA, 3-4).

Oh, in FIG. 1 (reproduced below), discloses a communication system for routing communication traffic between base stations BTS 18 in a radio access network (RAN) 12 with DAS antenna units 28, 30 and 32 using a DAS hub 26. (Ex. 1003 at 2:34-36, 4:33-5:13). The DAS hub 26 includes mapping data 46 that maps or correlates base station coverage segments to IP addresses of DAS antenna units. (*Id*. at 34-48). According to *Oh*, a coverage segment "may be a cell, cell sector, or other coverage area of the RAN, defined by a directional radiation pattern *from a BTS or the RAN*." (*Id*. at 4:50-53). The DAS hub 26 uses the mapping data to route traffic between BTS 18 and antenna units 28, 30 and 32.

Oh (Ex.1003) FIG. 1

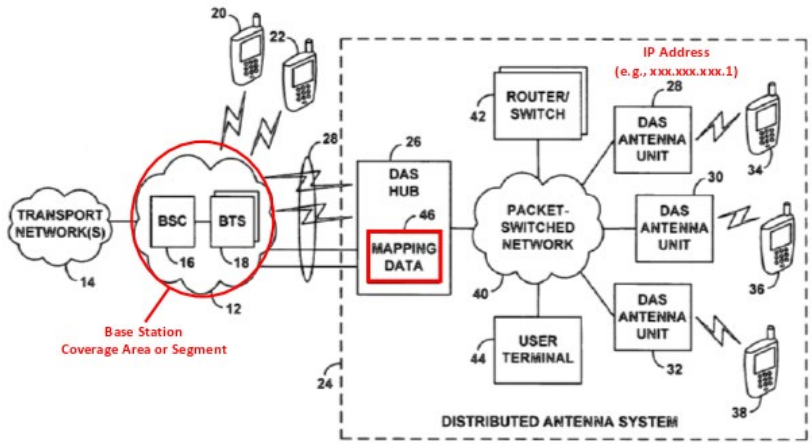

FIG. 1

Referring to FIG. 2 (reproduced below), *Oh* discloses DAS mapping data stored in a table at the DAS hub 26.

Oh (Ex.1003) FIG. 2

DAS MAPPING DATA	
RAN COVERAGE SEGMENT(S)	DAS ANTENNA UNIT IP ADDRESS(ES)
A	xxx.xxx.xxx.1, xxx.xxx.xxx.2, xxx.xxx.xxx.3, xxx.xxx.xxx.6
B	xxx.xxx.xxx.5
C	xxx.xxx.xxx.4

FIG. 2

Specifically, the DAS hub 26 will maintain in data storage a set of mapping data 46 that serves to correlate one or more RAN coverage segments of RAN 12 with one or

more IP addresses of the various DAS antenna units in DAS 24. This mapping indicates how DAS hub 26 should distribute coverage segments of RAN 12 among the various zones of the DAS 24 via packet-switched network 40. Specifically, when the DAS hub 26 receives incoming traffic in a particular RAN coverage segment, the DAS hub 26 consults the mapping data 46 to determine one or more DAS antenna unit IP addresses to which it should route that incoming traffic via packet-switched network 40. (*Id*. at 7:35-47).

2. *Cannon* Reference

Cannon is cited in the same IDS as *Oh* and was considered by the examiner during prosecution of the '499 patent. (Ex. 2002 at 8/8/18 IDS, 5). *Cannon*, in FIG. 1 (reproduced below), discloses distributed antenna system (DAS) 100 having a host unit 102 with a DART module 132 that communicates with a DART module 132 in remote units 106 over communication links 130. (Ex. 1004 at [0021]). According to *Cannon*, a DART module in remote unit 106 is specific for a particular frequency band and "**frequency band adjustments** in a remote unit can be made by **replacing a DART module** covering one frequency band **with a DART module covering a different frequency band**." (Ex. 1004 at [0025]) (emphasis added).

Cannon (Ex.1004) FIG. 1
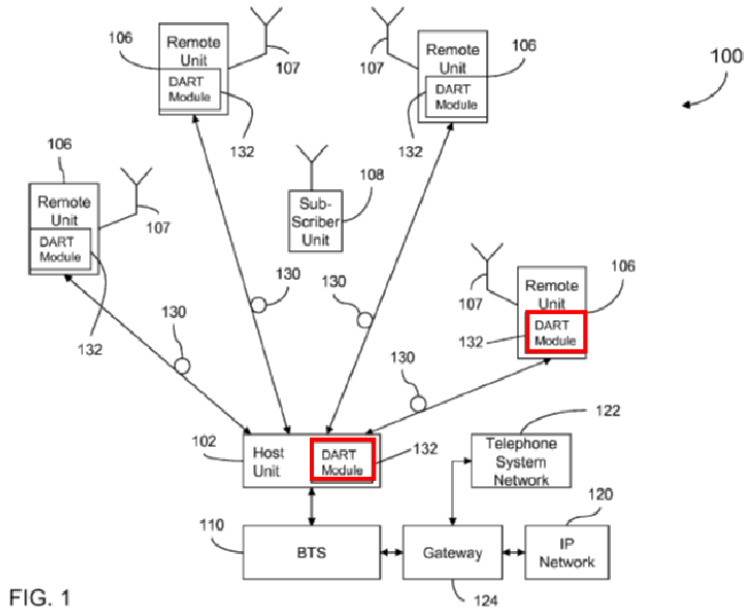

3. *Fischer* Reference

Fisher is incorporated into *Fischer '242,* which was cited in the same IDS as *Oh* and *Cannon* and considered by the examiner during prosecution of the '499 patent. (Ex. 2002 at 8/8/18 IDS, 4). *Fischer*, in FIG. 1, discloses a master host unit 104 communicating with remote server units 106 which in turn communicate with a plurality of remote units. In the downlink direction, the master host receives analog RF signals from service providers and digitizes them, which are then output to the remote server units. (Ex. 1005 at [0036]).

D. Notice of Allowance

On August 8, 2019, the Examiner mailed a Notice of Allowance ("8/8/19 NOA") providing reasons why the claims are not found in the cited prior art references – that includes *Oh*, *Cannon*, and *Fischer '242*:

> . . . **no prior art reference or combination of prior art references disclose or suggest** the combination of limitations specified in the independent claims including:
>
> 'wherein the *baseband unit* is configured to send a *digital representation of a second set of radio resources to the first remote unit* at a second point of time, the second set of radio resources for transmission at the antenna of the first remote unit,' and 'wherein a *number of radio resources in the first set of radio resources is different from a number of radio resources in the second set of radio resources*,' in claim 10.

(Ex. 2002 at 8/8/19 NOA, 3-4) (emphasis added).

III. CLAIM CONSTRUCTION

The Board construes challenged claims under the standard set by *Phillips v. AWH Corp.*, 415 F.3d 1303 (Fed. Cir. 2005) (*en banc*). *See also* 37 C.F.R. § 42.100(b). Petitioner must therefore advance a rationale for its proposed claim constructions under *Phillips* to satisfy the requirements of 37 C.F.R. § 42.104(b)(3). As such, the claims of the '499 patent should be construed in accordance with the ordinary and customary meaning of such claim as understood by one of ordinary

skill in the art and the prosecution history pertaining to the patent. 37 C.F.R. § 42.100(b). Petitioner has not done so.

A. Person of Ordinary Skill in the Art (POSITA)

Petitioner identifies a person of ordinary skill in the art ("POSITA") at the time of the earliest filing date of the '499 patent, February 7, 2011, would have: (1) a bachelor's degree in electrical engineering; and (2) a minimum of 3-4 years of industry experience in wireless communications networks and engineering. (Pet. at 7). Patent Owner submits that the above POSITA at the time of the '499 patent would also have industry experience dealing with wireless devices such as remote units and antennas.

B. "Signal Sources" (claims 1, 4, 8, 11, 14 and 16)

The proper construction of the term "signal source" to a POSITA is "an operator's network." A POSITA would review the '499 patent and find a distributed antenna system (DAS) designed and configured to work with operator networks:

> Wireless and **mobile network operators** face the continuing challenge of building networks that effectively manage high data-traffic growth rates. Mobility and an increased level of multimedia content for end users requires end-to-end network adaptations that support both new services and the increased demand for broadband and flat-rate Internet access. One of the most difficult challenges faced by **network operators** is maximizing the capacity of their DAS networks while

> ensuring cost-effective DAS deployments and at the same time providing a very high degree of DAS remote unit availability.

(Ex. 1001 at 1:33-43) (emphasis added).

The ’499 patent further states that “it would be advantageous for wireless network operators to employ a DAS solution,” and that each base station belongs to one or more wireless operators. (*Id.* at 1:49-51; *see also id.* at 3:4-8 (“The present invention can also serve multiple operators, multi-mode radios (modulation-independent) and multi frequency bands per operator to increase the efficiency and traffic capacity of the operators’ wireless networks.”), 5:55-64 (“[A] wireless operator may have more than one RF carrier per channel allocated to a single base station”)).

Petitioner’s construction of “signal source” as “an RF transceiver or transmitter” (Pet. at 8) is different than Petitioner’s construction in a parallel Delaware district court litigation as “transceivers or transmitters of analog radio frequency (RF) signals.” (Ex. 2005 at 1) (Ex. 2006 at 2). Here, the construction in the Petition hinges on the conclusory assertion that “[e]ither a transmitter or a transceiver, but not a receiver, can be the source of an RF signal.” (Pet. at 8). The Petition itself contains no support for this assertion. Instead, Petitioner string cites seven paragraphs of the Proctor Declaration (*Id.* (citing Ex. 1017, ¶¶ 47-52)). These seven paragraphs contain more than three pages of testimony and argument, as well

as supporting citations to "Indoor Radio Planning" (Ex. 1012), the '499 patent, and *Oh*, none of which receives any discussion in the Petition itself. (*See* Ex. 1017, ¶¶ 47-52).

Petitioner also cites unrelated colloquy from its expert about what a person of ordinary skill in the art would understand about RF input signals. (Ex. 1017, ¶51 ("The disclose*[sic]* of the '499 Patent confirms my view that a POSITA would understand that RF input signals are connected to a baseband unit using various different connections.")). Petitioner's reliance on the testimony, argument, and evidence incorporated through string citation to the Proctor Decl. violates 37 C.F.R. § 42.6. A POSITA would review the '499 patent and understand that the inventions are directed to allocating radio resources ***inside*** the DAS and do not impose specific limitations on components outside the DAS. Accordingly, Patent Owner submits that a POSITA would understand "signal sources" to mean "an operator's network" at the time of the invention.

C. "Radio Resources" (Claims 1-2, 4, 8-9, 11, 14, 16 and 19)

The proper construction of "radio resources" to a POSITA is "wireless resources such as RF carriers, CDMA codes, or TDMA time slots." A POSITA would review the specification of the '499 patent and find examples of radio resources, "such as RF carriers, CDMA codes or TDMA time slots" used for

transmission of mobile user communications (e.g., voice or data) to mobile phones. (Ex. 1001 at 12:5-9).

Again, Petitioner's construction of "radio resource" as "an analog component of an RF spectrum" (Pet. at 9) is different than Petitioner's construction in the parallel Delaware district court litigation as "subsets of analog radiofrequency (RF) signals." (Ex. 2005 at 3) (Ex. 2006 at 3). Petitioner attempts to improperly read "analog" into the construction based on a series of unsupported claims in the Proctor Decl. (Pet. at 9.). The Petition merely references extrinsic evidence to claim "*Tolstrup* explains that 'radio resources' consist of an 'RF spectrum,'" while saying nothing about what a POSITA would understand "radio resources" to be at the time of the invention. *See Phillips*, 415 F.3d at 1313; (Pet. at 9). Absent such proof, the Board should disregard Petitioner's proposed construction of "radio resources."

The '499 patent expressly explains "radio resources" to include "RF carriers, CDMA codes or TDMA timeslots"—which the Board should thus adopt as its construction. (Ex. 1001 at 12:5-9). The '499 patent further explains that radio resources refer to the frequency, coding, or time slot a remote unit should use to send user communications (*e.g.*, voice or data) to a mobile phone. "One . . . function [of the DAU] is determining and/or setting the appropriate amount of ***radio resources*** (such as RF carriers, CDMA codes or TDMA time slots) assigned to a particular DRU or group of DRUs to meet desired capacity and throughput objectives" (*Id.*).

Petitioner ignores that "radio resources" may refer to CDMA codes or TDMA time slots—types of radio resources which are not adequately captured by a generic and overly-broad construction of "analog components of an RF spectrum."

Moreover, Petitioner's proposed construction of "radio resources" also depends on cross-referenced expert testimony and evidence not explained in the Petition itself. Petitioner cites 15 paragraphs from the Proctor Decl. as support for the assertion that "*Tolstrup* explains that 'radio resources' consist of an 'RF spectrum,' and provides numerous examples how different component of an RF spectrum, such as carriers, CDMA codes, etc., are used as radio resources for GSM, UMTS, and other technologies," and the conclusory statement that "'radio resource' should be construed to mean 'an analog component of an RF spectrum." (Pet. at 9). These string citations ask the Board to read more than eight pages of expert testimony into the Petition, as well as another exhibit and some discussion of the prior art. (*Id.*; Ex. 1017, ¶ 58). The Board should therefore disregard Petitioner's proposed construction of "radio resource" as lacking the required analysis and support. Accordingly, Patent Owner submits that a POSITA would understand "radio resources" to mean "wireless resources such as RF carriers, CDMA codes, or TDMA time slots" at the time of invention.

D. **"Baseband Unit"** (Claims 1, 2, 6, 8-9, 12, 14 and 19)

The proper construction of "baseband unit" to a POSITA is "a unit that manages baseband communications between an operator network and one or more digital remote units." A POSITA would review the '499 patent's specification and find Digital Access Units ("DAUs") or baseband units responsible for managing baseband communications such as "to control the packet traffic of an associated plurality of Digital Remote Units," "to determine the direction in which downlinked channels are propagated," and "determining and/or setting the appropriate amount of radio resources (such as RF carriers, CDMA codes or TDMA time slots) assigned to a particular DRU or group of DRUs to meet desired capacity and throughput objectives." (Ex. 1001 at 2:25-27, 5:20-31, 11:64-13:2). The '499 patent also discloses that each base station belongs to one or more wireless operators. (*See*, *e.g.*, *id.* at 3:4, 5:55-59, 5:63-64).

Again, Petitioner's construction of "baseband unit" as "a device that performs conversion to and from baseband signals, *e.g.*, digitized streams" (Pet. at 11) is different than Petitioner's construction in a parallel Delaware district court litigation as "a device that converts between analog radiofrequency (RF) signals and digital baseband signals." (Ex. 2005 at 6) (Ex. 2006 at 3). Here, Petitioner ignores a primary attribute of a "baseband" unit by incorrectly trivializing "baseband signals" to essentially mean "digitized streams." In other words, Petitioner attempts to read out

"baseband" from the term, which it cannot do. All words in a claim must be considered in judging the patentability of that claim. *See In re Wilson*, 424 F.2d 1382, 1385 (CCPA 1967).

Petitioner relies on an unrelated patent application to *Larsen* to assert that "baseband unit" "has an ordinary meaning in the art of a device that performs conversion to and from 'baseband signals,' *e.g.*, for communication with remote units." (Pet. at 10-11). However, the Petitioner's citation to *Larsen* does not disclose conversion to and from baseband signals. It merely states that a baseband unit routes baseband signals: "[i]n an alternative [distributed antenna system] DAS architecture, encoded baseband signals are routed from a baseband unit (BBU) to remote 'radio heads' where the signals are modulated to appropriate RF carriers for radio transmission to mobile devices." (Pet. at 10 citing Ex. 1007 at [0006]). It is clear that this quote from *Larsen* does not mention anything about conversion to and from baseband.

Petitioner then cites a secondary reference, *Cannon*, to redefine "baseband unit" by generalizing baseband signals to mean merely "digitized streams." (Pet. at 9, 11). But, Petitioner does not offer any discussion for why a POSITA would understand baseband signals to mean "digitized streams," rather than—for example—a signal at the baseband frequency level. Petitioner ignores the fact that RF signals can be in analog form or digitized form yet remain at the RF level.

Petitioner also fails to explain what a person of ordinary skill in the art would find the plain and ordinary meaning, or the meaning of "baseband signals," to be at the time of the invention. *See Phillips*, 415 F.3d at 1313.

Most importantly, the Petition's citations to the *Cannon* reference do not support its assertion either. The *Cannon* reference makes clear that "digitiz[ed] downlink and uplink RF signals are not analog RF signals but instead are digital data signals representing digital RF samples of a modulated RF signal." (Pet. at 11 citing Ex. 1004 at [0021]). On the other hand, *Cannon* explains that "'digital baseband'... comprise[s] digital representations of an IF or baseband version of the original RF signal." (*Id*). According to *Cannon*, the term "digital RF" refers to digital representations of an RF signal, while "digital baseband" refers to digital representations of a baseband signal. (*Id*). In other words, both RF and baseband signals can each have digitized versions, but one is not synonymous with the other. Indeed, the Board should not afford any weight to Petitioner's superficial treatment of its claim construction arguments.

Without any credible support in *Larsen* or *Cannon*, Petitioner's argument is left to rely heavily on improper incorporation by reference. Specifically, Petitioner imports eight paragraphs of the Proctor Decl. to interpret the meaning of "baseband unit" in the *Larsen* application and to support the conclusory statement that, "[c]onsistent with the '499 patent and *Larsen*, the term 'baseband unit' has an

ordinary meaning in the art of a device that performs conversion to and from 'baseband signals,' *e.g.*, for communication with remote units." (Pet. at 10-11 (*citing* Ex. 1017, ¶¶ 77-84)). The four pages of testimony and citations to multiple aspects of the *Larsen* application appear only in the Proctor Decl. itself. As with Petitioner's other claim construction proposals, Petitioner's construction of "baseband unit" depends on improperly incorporated expert testimony and should not be afforded any weight.

Simply put, the '499 patent discloses that DAUs or baseband units receive data from wireless operator networks and manages the distribution and coordination of baseband signals and related resources throughout the DAS. Thus, a POSITA would understand "baseband unit" to be "a unit that manages baseband communications between an operator network and one or more digital remote units."

E. "Baseband unit is configured to send a digital representation of a [first/second] set of radio resources" (Claims 1 and 8)

This term is disputed by the parties and should also be construed in reviewing the challenged claims. (Ex. 2005 at 4) *See also Nidec Motor Corp. v. Zhongshan Broad Ocean Motor Co.*, 868 F.3d 1013, 1017 (Fed. Cir. 2017) (noting that "we need only construe terms 'that are in controversy, and only to the extent necessary to resolve the controversy'"). The proper construction of "baseband unit is configured to send a digital representation of a [first/second] set of radio resources" to a

POSITA is a "baseband unit allocates radio resources for communication of digital baseband data."

A POSITA would review the '499 patent and find a baseband unit (DAU) configured to receive data from an operator network and allocate "the appropriate amount of radio resources (such as RF carriers, CDMA codes or TDMA time slots) assigned to a particular DRU or group of DRUs to meet desired capacity and throughput objectives," such as when the DRU in the cafeteria is overloaded during lunch time. (Ex. 1001 at 2:60-3:8, 5:20-31, 6:9-30, 12:5-9).

Indeed, to this point, the '499 patent discusses that DAU or baseband unit manages and controls the amount of radio resources deployed for each DRU. (Ex. 1001 at 5:28-31, 8:12-35, 12:5-14, 12:50-13:2) ("One such key function [of the DAU/baseband unit] is determining and/or setting the appropriate amount of radio resources (such as RF carriers, CDMA codes or TDMA time slots) assigned to a particular DRU or group of DRUs to meet desired capacity and throughput objectives."). In other words, the '499 patent discusses a baseband unit configured to send digital representations that identifies which radio resources for each DRU to use. A POSITA would thus understand the above to be the plain and ordinary meaning based at least upon the specification of the '499 patent. (Ex. 1001 at 5:28-31, 8:12-35, 12:64-13:2).

Petitioner does not propose a construction for "baseband unit is configured to send a digital representation of a [first/second] set of radio resources," suggesting instead that the term be given its "ordinary and customary meaning." (Pet. at 7-8). Yet, in the parties' parallel district court litigation pending in Delaware, Petitioner proposed a construction of this term as "baseband unit digitizes, *down-converts* and delivers a [first/second] set of radio resources." (Ex. 2005 at 4) (Ex. 2006 at 3) (emphasis added).

The Board has held that "Petitioner's failure to provide a claim construction is . . . further compounded by the fact that Petitioner takes an inconsistent position before the District Court." *Orthopediatrics Corp. v. K2M, Inc.*, IPR2018-01548, Paper 9 at 11 (PTAB Mar. 1, 2019). Worse than simply ignoring its district court construction of this term in the Petition, Petitioner actively takes an inconsistent stance that suggests its omission of a proposed construction was intentional and not oversight. Importantly, Petitioner ignores the "*down-convert*" requirement it proposed in the district court regarding Grounds 1-3. As such, the Board should reject Petitioner's reading of this claim term on *Oh*, *Cannon* and *Fischer*.

F. Petitioner's Claim Constructions Should be Rejected as Contrary to Proposed Constructions in Pending Parallel District Court

The Board should reject Petitioner's constructions for the above terms it proposes that conflict and are contrary with its proposed constructions in parallel

litigation pending between the parties in U.S. District Court for the District of Delaware. *See Orthopediatrics*, Paper 9 at 11 ("By failing to reconcile its proffered claim construction here with its very different construction proffered in District Court . . . Petitioner fails to satisfy this burden."). Petitioner does not acknowledge, much less discuss, its competing constructions in the Petition and District Court. Petitioner's proposed constructions do not warrant consideration from the Board.

IV. THE BOARD SHOULD EXERCISE ITS DISCRETION AND REJECT GROUNDS 1-3 RELYING ON THE SAME PRIOR ART PRESENTED DURING PROSECUTION OF THE '499 PATENT

The Board should exercise its discretion and not institute *inter partes* review on Grounds 1-3 because Petitioner presents the same prior art over which the Office allowed the challenged claims during prosecution. *See* 35 U.S.C. § 325(d) ("the Director may take into account whether, and reject the petition or request because, the same or substantially the same prior art or arguments previously were presented to the Office"). In evaluating whether to exercise its discretion under § 325(d), the six factors the Board should consider denying institution are:

> (a) the similarities and material differences between the asserted art and the prior art involved during examination; (b) the cumulative nature of the asserted art and the prior art evaluated during examination; (c) the extent to which the asserted art was evaluated during examination, including whether the prior art was the basis for rejection; (d) the extent of the overlap between the arguments made during examination and the

> manner in which the Petitioner relies on the prior art or Patent Owner distinguishes the prior art; (e) whether petitioner has pointed out sufficiently how the examiner erred in its evaluation of the asserted prior art; and (f) the extent to which additional evidence and facts presented in the petition warrant reconsideration of the prior art or arguments.

Becton, *Dickinson & Co. v. B. Braun Melsungen AG*, IPR2017-01586, Paper 8 at 17-18 (PTAB Dec. 15, 2017) (precedential); *see also ClearH20, Inc. v. CEVA Animal Health Inc.*, IPR2020-00039, Paper 21 at 24-25 (PTAB Mar. 18, 2020).

A. Factors (a) through (d) justify denying institution of Grounds 1-3

1. *Oh* and *Cannon* Refer to the Same Prior Art Presented During Prosecution of the '499 Patent and Not Materially Different

Grounds 1-3 relying on *Oh* and *Cannon* are the exact prior art references disclosed and considered by the examiner and overlap with the consideration given by the examiner in allowing the '499 patent claims. (Ex. 2002 at 8/8/18 IDS, 3-5). Petitioner did not even mention to the Board that *Oh* and *Cannon* were already considered and, importantly, has not raised any new arguments to the Patent Office that were not already considered by the examiner. For instance, in the 2/21/19 OA, the examiner confirmed consideration of *Oh* and *Cannon* and found that "no prior art reference or a combination of prior art references disclose or suggest" the '499 patent claims. (Ex. 2002 at 2/21/19 OA, 2-3, 8-9). Specifically, the examiner did not find at least these features in the cited references – that includes *Oh* and *Cannon*:

- wherein the baseband unit is configured to send a digital representation of a second set of radio resources to the first remote unit at a second point of time, the second set of radio resources for transmission at the antenna of the first remote unit.
- wherein a number of radio resources in the first set of radio resources is different from a number of radio resources in the second set of radio resources.

(Ex. 2002 at 8/8/19 NOA, 3-4). Petitioner now asks the Board to find the same features the examiner could not find in *Oh* and *Cannon* in Grounds 1-3. As a result, Petitioner has not raised any new grounds of unpatentability with its assertion of the *Oh* and *Cannon* references that were already cited and considered in allowing the '499 patent claims.

2. <u>*Fischer* is Cumulative to *Fischer '242* Considered During Prosecution of '499 Patent</u>

Fischer '242 was cited and considered by the examiner (Ex. 2002 at 8/8/18 IDS, 4) and incorporated *Fischer* in its entirety. (Ex. 2003 at 1:9-26) ("The present application is related to commonly assigned and co-pending U.S. patent application Ser. No. 11/150,820 [Fischer] . . . incorporated herein by reference in their entirety).

Petitioner does not distinguish *Fischer* from *Fischer '242*, but even if Petitioner tried, Petitioner would fail to do so to any material degree. Beyond that *Fischer '242* calls out and incorporates *Fischer* into its disclosures, Fischer '242 discloses similar subject matter in *Fischer* cited by Petitioner. For example,

Petitioner cites "Fischer's disclosure of using both a master host unit and a 'master expansion unit . . . that ***enables the expansion*** of both the 800 MHz cellular band and the 1.9 GHz PCS band ***into a plurality of buildings over a single platform***." (Pet. at 68) (emphasis added). But *Fischer '242* also discloses that "system 100 uses digital transport over at least one digital communication link 114 to transport digitized RF spectrum between the master host unit 104 and the at least one hybrid expansion unit 106," and that "master host unit 104 enables the aggregation and transmission of a plurality of services to a plurality of buildings or other structures so as to extend the wireless coverage of multiple services into the structures with a single platform." (Ex. 2003 at 3:54-59, 5:66-6:4).

These similarities and lack of material distinctions between *Fischer* and *Fischer '242* renders Fischer cumulative. As a result, in Grounds 1-3, there are no material differences between the Petitioner's asserted references to *Oh*, *Cannon* and *Fischer* and the references submitted by the Patent Owner during prosecution of the '499 patent. Indeed, Petitioner does not, and could not, argue that the Petition raises grounds for invalidity not identified by Patent Owner in an IDS. Petitioner's reassertion of this art with no rationale for why the Patent Office did not appropriately consider it during prosecution renders the Petition redundant and worthy of rejection under § 325(d).

Accordingly, factors (a) through (d) favor denying institution.

B. Factors (e) and (f) justify denying institution of Grounds 1-3

Petitioner has not pointed out how the examiner erred in its evaluation of the cited references or provided additional evidence or facts that warrant reconsideration of the prior art or arguments. *See, e.g.*, *Becton*, *Dickinson*, Paper 8 at 17-18. The Petition does not allege—much less show—that the Office erred in allowing the challenged claims.

First, Petitioner does not even inform the Board that *Oh*, *Cannon* and *Fischer '242*, which incorporates *Fischer* by reference, were cited and considered by the examiner during prosecution of the '499 patent for Grounds 1-3. (Pet. at 4-5). And the Petitioner makes no mention that the examiner allowed the '499 patent claims over *Oh*, *Cannon* and *Fischer '242*.

Second, Petitioner has not shown how the Office erred in allowing the challenged claims over the asserted art during prosecution because the Petition's only mention of the prosecution of the '499 patent is the biographical fact that the challenged claims were "allowed without any prior art rejections." (Pet. at 6). The Petition ignores the subject matter allowed by the Examiner and the prior art—not asserted here—cited in the Notice of Allowance. Petitioner has thus failed to meet its burden of showing error by the Office in allowing the challenged claims over the asserted art during prosecution, and the Board should deny institution.

Third, Petitioner does not claim that any grounds for invalidity raised in the Petition warrant reconsideration of the Patent Office's decision to allow the challenged claims over the asserted art during prosecution. The Patent Office correctly allowed the challenged claims over the asserted art without a substantive rejection because the asserted art does not disclose, teach, or suggest the subject matter allowed during the prosecution of the '499 patent.

Finally, Petitioner does not raise any grounds for invalidity not already considered by the Examiner, and Petitioner presents neither argument nor evidence to show that the Patent Office erred in its consideration of the asserted art during prosecution. Further consideration of the Petition merely consumes the Board's resources to duplicate the work already done during prosecution. The Board should therefore deny institution under 35 U.S.C. § 325(d).

Accordingly, factors (e) through (f) favor denying institution.

V. THE PETITION FAILED TO SHOW THAT GROUNDS 1-3 HAVE A REASONABLE LIKELIHOOD OF SUCCESS

A further review of *Oh*, *Cannon*, and *Fischer* reveals substantial deficiencies in these references. Specifically, Petitioner has failed to "specify where each element of the claim is found in the prior art patents or printed publications relied upon." 37 C.F.R. § 42.104(b)(4). And Petitioner has failed to satisfy the *Graham* factors because it offers no evidence or support in the asserted references for its alleged

motivation to combine *Cannon* and *Fischer* with *Oh*. Accordingly, Petitioner has not met its burden that it would prevail in showing unpatentability of any of the challenged claims based on Grounds 1-3.

A. Ground 1: *Oh* Fails to Disclose Each and Every Element to Support Anticipation of the Challenged Claims

Petitioner has not shown a reasonable likelihood of success for Ground 1, challenging claims 1-5, 8-11, 14-16 and 19, because *Oh* fails to disclose several key claim elements. Most notably lacking in *Oh* is any disclosure of signals being transmitted at the "baseband" frequency level. Petitioner also repeatedly relies improperly on expert testimony from the Proctor Decl. for support. Accordingly, the challenged claims are novel over *Oh*, as the Patent Office correctly found during prosecution.

1. *Oh* fails to disclose a "baseband unit"

The term "baseband unit" is recited throughout claims 1-2, 5, 8-9, 14 and 19. Petitioner has not met its burden to demonstrate that *Oh* discloses a "baseband unit." Specifically, Petitioner relies on the DAS hub 26 in *Oh* as the "baseband unit," but the DAS hub 26 does not manage baseband communications. Because a "baseband unit" is missing in *Oh*, Grounds 1-3 should be dismissed for this reason alone.

To allege that a baseband unit is disclosed, the Petitioner relies on *Oh*'s teaching that the DAS hub 26 in the downlink direction:

> convert[s] the incoming RF traffic to a digitized bit stream if necessary, packetize[s] the bit stream into a sequence of IP packets, and transmit[s] those IP packets via network 40 to each of the corresponding DAS antenna unit IP addresses.

(Ex. 1003 at 8:6-10, Pet. at 23). *Oh*'s system clearly communicates digitized and packetized RF signals—*i.e.*, signals at the RF frequency level, but nowhere does it teach that those signals are transmitted at the baseband frequency level. Here and elsewhere, *Oh* does not even mention or teach "baseband" or any system communicating signals at the "baseband" frequency level. Petitioner simply does not address this deficiency or point to anything in *Oh* where a "baseband unit" can be found.

In view of this glaring deficiency, the Petitioner, however, attempts to recast any type of conversion to a "digitized data stream" in *Oh* as conversion to baseband, which improperly reads out "baseband" from the "baseband unit" in the claims (Pet. at 12, 22, 34, 51), which it cannot do. All words in a claim must be considered in judging the patentability of that claim. *See In re Wilson*, 424 F.2d at 1385. By way of contrast, the Petitioner acknowledges that the '499 patent discloses a baseband unit as a DAU that may in some embodiments be configured to "convert[] analog RF data to digitized data streams: '[t]he RF input signals are separately down-

converted, digitized, and converted to *baseband* (using a Digital Down-Converter) by the DAU.'" (Pet. at 22).

As such, the Petitioner ignores the word "baseband" in the term "baseband unit" and argues that "*Oh* discloses the claimed 'baseband unit' as DAS hub 26, which converts 'incoming RF communication traffic from the [base transceiver station] BTS' to digitized bit streams." (Pet. at 22). Based on "digitized bit streams," Petitioner makes the unsupported assertion that, "[b]ecause *Oh* discloses a DAS hub 26 that converts analog RF signals to and from baseband signals, *e.g.*, digitized streams for digital communication with remote units, *Oh* discloses a baseband unit." (*Id.* at 24). But, *Oh* makes no mention at all of baseband frequency signals, much less the conversion of RF signals to and from baseband. Petitioner's sole reliance on "*e.g.*, digitized streams" to do all the work for its argument has no support or explanation in *Oh*. Petitioner has not met its burden to prove that a "baseband unit" is found in *Oh*.

Accordingly, Ground 1 cannot withstand scrutiny because *Oh* fails to disclose the "baseband unit," and Petitioner offers no substantive argument that it does. The Patent Office correctly concluded in allowing the challenged claims over *Oh* that it does not disclose a baseband unit. The Board should not revisit that conclusion when Petitioner supplies no adequate grounds for the Board to do so.

2. *Oh* fails to disclose "wherein the baseband unit is configured to send a digital representation of a first set of radio resources to the first remote unit at a first point in time"

This term is recited in claims 1 and 8, and a similar term is recited in claim 14, which recites transmitting from the baseband unit, at a first point in to time, "a digital representation of a first set of radio resources to a first remote unit." (Ex. 1001 at 16:4-8). Petitioner does not offer a construction for this term. As proposed by the Patent Owner, this term means a "digital representation" of a first set of radio resources is sent to a first remote unit, identifying which radio resources it should use at a first point in time for communicating with mobile phones. In this way, the baseband unit allocates radio resources for communication of mobile user data.

Petitioner has failed to meet its burden to prove that *Oh* discloses a baseband unit configured to send a digital representation of a first set of radio resources to the first remote unit at a first point in time. First, as noted above, *Oh* does not disclose the use of any "baseband" frequency signals or a "baseband unit." Referring to FIG. 1 (reproduced below), Petitioner still relies on DAS hub 26 that uses mapping data 46 to route RF traffic (not baseband traffic) from a coverage segment via a packet-switched-network to an IP address of a DAS antenna unit. (Pet. at 37). DAS antenna units in *Oh*, however, are merely pass-through devices without any disclosure of reconfiguring them. Indeed, Petitioner has failed to show where *Oh* sends a digital

representation of a set of radio resources indicating which sets of "radio resources" to use.

Oh (Ex.1003) FIG. 1
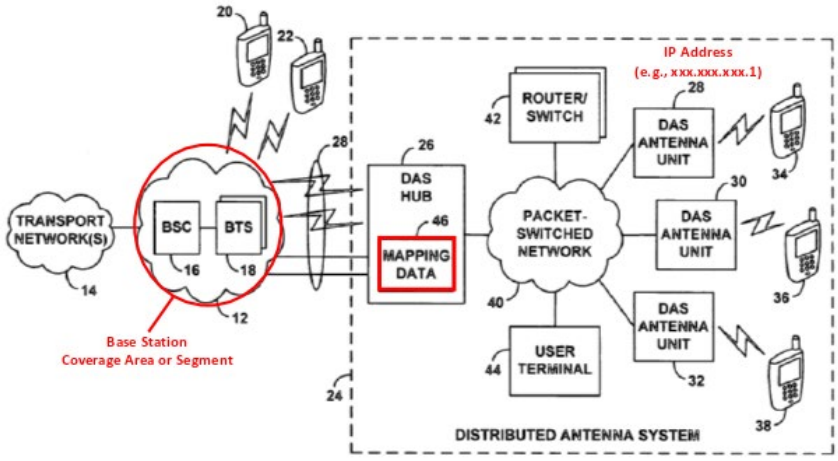

FIG. 1

Specifically, referring to *Oh*, the Petitioner asserts that:

> Thus, *Oh* discloses a baseband unit (DAS hub 26) that is configured (using **mapping data**) to **send a digital representation (digitized bit stream) of a first set of radio resources (digitized RAN coverage segment listed in the mapping table of FIG. 2) to the first remote unit** at a first point in time (starting at the time the mapping table was configured or reconfigured) . . .

(Pet. at 37) (emphasis added). Here, Petitioner makes a fatal error in *Oh* – *i.e.*, there is no disclosure in *Oh* that the RAN coverage segments in the mapping table of FIG. 2 (reproduced below) are in fact the radio resources. Most importantly, there is no

disclosure whatsoever in *Oh* that digital representations of radio resources are sent to any DAS antenna unit.

Oh (Ex.1003) FIG. 2

DAS MAPPING DATA	
RAN COVERAGE SEGMENT(S)	DAS ANTENNA UNIT IP ADDRESS(ES)
A	xxx.xxx.xxx.1, xxx.xxx.xxx.2, xxx.xxx.xxx.3, xxx.xxx.xxx.6
B	xxx.xxx.xxx.5
C	xxx.xxx.xxx.4

FIG. 2

Instead, according to *Oh*, "[p]rovided with this **mapping table in its data storage**, DAS hub 26 may accordingly **route incoming and outgoing traffic** via packet-switched-network 40 between RAN 12 and the various DAS antenna units." (Ex. 1003 at 9:17-19) (emphasis added). More specifically regarding the mapping data, *Oh* discloses that:

> Mapping data 46 can be made alterable by storing the data in data storage of DAS hub 26 and providing an interface through which a user or system can edit the data, causing the DAS hub 26 to store the changed mapping in data **for use in subsequently routing communication traffic** between RAN coverage segments and DAS antenna unit IP addresses.

(*Id*. at 9:59-63) (emphasis added).

Oh's DAS antenna units are pass-through devices with static configurations as they merely relay whatever traffic is sent to them according to the mapping or routing table. *Oh* simply does not disclose sending configuration information or "digital representations" of a set of radio resources to the antenna units that indicates which sets of "radio resources" to use. In other words, *Oh* does not disclose adaptively changing configurations of the digital remote units at the front-end (*i.e.*, at the digital remote unit) as taught by the '499 patent, but rather is concerned with routing traffic to the digital remote units based on a routing table at the back-end (*i.e.*, at the baseband unit).

Throughout Grounds 1-3, Petitioner appears to confuse RF traffic in *Oh* with radio resources. As discussed above and explained in the '499 Patent, a POSITA would not equate radio resources as RF communication traffic. According to the '499 patent, "radio resources" refer to **CDMA codes, TDMA time slots, or carrier frequencies** for use by the digital remote units for transmission of the RF traffic to mobile phones. (Ex. 1001 at 12:5-9, 14:15-24, 15:1-10). Without any evidentiary support in *Oh*, Petitioner relies solely on attorney argument to conflate those two important points. Also, Petitioner's expert provides no further analysis and merely parrots Petitioner's attorney argument. For example, Petitioner argues:

> *Oh* explains that the **digital representations of the radio resources** are then **converted to analog RF and transmitted by the remote DAS** antenna unit: "[u]pon receipt of the IP packets at the DAS antenna units having the destination IP addresses, each recipient DAS unit may then depacketize the digitized bit stream, convert the bit stream to an RF signal, and emit the RD signal via its antenna for receipt by any wireless client devices operating in its local coverage area."

(Petition at 35) (emphasis added). Here, Petitioner's citation to *Oh* is about the **transmission of RF traffic—<u>not</u> about the allocation of radio resources** *for* the transmission of the traffic. Furthermore, Petitioner misses the mark entirely with its conclusory statement about how "digital representations of the radio resources are . . . transmitted by the remote DAS antenna unit"— which does not disclose the claim element of sending digital representations of radio resources *to* the DAS antenna unit that indicates which sets of radio resources to use. In any event, *Oh* does not disclose either sending digital representations of radio resources to or by the DAS antenna units. And the citations in *Oh* that Petitioner points to do not support such statements.

As yet another example, Petitioner argues:

> *Oh* discloses that the baseband unit (DAS hub 26) is configured to use mapping data to **decide which digital representations of radio resources to send to each remote antenna unit**: "the DAS hub unit 26 may refer to the mapping data to determine that the given RAN coverage segment corresponds with two particular DAS antenna unit IP addresses."

(Petition at 37) (emphasis added). Again, *Oh* is discussing *routing of traffic*— **not** sending or allocating radio resources to the DAS antenna unit *for* the transmission of traffic. As discussed above, *Oh* discloses that its mapping data is "**for use in subsequently routing communication traffic** between RAN coverage segments and DAS antenna unit IP addresses." (Ex. 1003 at 9:59-63) (emphasis added). Indeed, *Oh* discloses routing and sending RF traffic, but does not disclose sending digital representations of radio resource information such as CDMA codes or TDMA time slots for the digital remote unit to deploy. Petitioner has not and cannot point to any evidentiary support in *Oh* for this claim element of sending digital representations of radio resources to DAS antenna units.

Furthermore, *Oh*'s deficiencies are even more apparent when considered in light of an important feature of the '499 patent claims – *i.e.*, **digital representations of a first and second set of radio resources are sent to remote units at a first time and second time**, respectively. This feature allows the DAS to adaptively readjust which radio resources remote unit can use in response to increases or decreases in the population of mobile users within the coverage area of the remote unit. (Ex. 1001 at 6:27-30). In this way, the '499 patent discloses a system that provides a "high degree of flexibility to manage, control, enhance, and facilitate the radio resource efficiency usage, availability, and overall performance of the distributed wireless network." (Ex. 1001 at 2:60-64). For example, the '499 patent

describes a scenario in which additional radio resources are deployed for a certain remote unit in the "cafeteria in an enterprise building during the lunch hour where a large number of wireless subscribers are gathered." (Ex. 1001 at 6:9-30).

In stark contrast to an important feature of the '499 patent, *Oh* does not disclose the deployment of additional radio resources for certain remote units to accommodate an increase in the number of mobile users within the coverage area of the digital remote unit. Rather, *Oh* discloses something quite different— i.e., *routing traffic by mapping coverage areas of cellular base stations or cell sectors to certain antenna units* in the distributed antenna system. (Pet. at 36-37; Ex. 1003 at 3:26-29, 9:12-58, FIG. 2). Assigning additional cell sectors to a DAS antenna unit does nothing to accommodate an increased number of users near those antenna units and does not optimize network capacity and performance for those users. *Oh* merely discloses routing and sending RF communication traffic from base stations to DAS antenna units by way of mapping cell sectors to the antenna units. (Ex. 1003 at 8:1-10). Indeed, there is no mention or support in *Oh* of sending digital representations of sets of radio resources or the deployment of additional radio resources for antenna units.

Petitioner has not met its burden of showing where this claim element can be found in *Oh*. Moreover, there is absolutely no support in *Oh* that DAS hub 26 sends digital representations of radio resources and sends them to any DAS antenna unit

as Petitioner asserts at any point in time, let alone a first time or second time. Accordingly, *Oh* does not disclose a "baseband unit" that sends a digital representation of a first set of radio resources to the first remote unit at a first point in time that enables allocation of radio resources for a digital remote unit to communicate with mobile users at a first time.

3. *Oh* fails to disclose "wherein the baseband unit is configured to send a digital representation of a second set of radio resources to the first remote unit a second point in time"

This term is recited in claims 1 and 8, and a similar term is recited in claim 14, which recites transmitting from the baseband unit, at a second point in to time, "a digital representation of a second set of radio resources to a first remote unit." (Ex. 1001 at 16:4-8). This element is missing for at least the same reasons noted above in Section V.A.2. That is, the DAS hub 26 does not send digital representations of radio resources or send those representations to DAS antenna units at a first time or second time. (Ex. 1003 at 9:59-63). Again, even if mapping between coverage segments and IP addresses of DAS antenna units changes, *Oh* does not teach that digital representations of those radio resources are sent to the DAS antenna units. Accordingly, Petitioner has not met its burden that *Oh* discloses a "baseband unit" that sends a digital representation of a second set of radio resources to the first remote unit at a second point in time that enables allocation of

radio resources for a digital remote unit to communicate with mobile users at a second time.

4. *Oh* fails to disclose "wherein a number of radio resources in the first set of radio resources is different from a number of radio resources in the second set of radio resources"

This term is recited in claims 1, 8 and 14. Petitioner has not met its burden to demonstrate that *Oh* discloses the term "wherein a number of radio resources in the first set of radio resources is different from a number of radio resources in the second set of radio resources." Petitioner refers to claim language in claim 11 of *Oh* that recites changing mapping data "correlating a given DAS antenna unit IP address with at least one additional RAN coverage segment." (Pet. at 44). As noted above in Sections V.A.2-3, the mapping data changes have nothing to do with sending digital representations of radio resources to a DAS antenna unit by a DAS hub 26 in *Oh*. The mapping data is "**for use in subsequently routing communication traffic** between RAN coverage segments and DAS antenna unit IP addresses." (Ex. 1003 at 9:59-63) (emphasis added). *Oh* does not disclose sending digital representations of radio resources to be deployed for DAS antenna units, much less sending a first set and a second set of such representations of radio resources. And Petitioner has not pointed to anything in *Oh* regarding deploying a different number of radio resources between the first and second sets. Accordingly, this element is missing in *Oh*.

5. *Oh* fails to disclose "wherein the first set of radio resources is a subset of the plurality of radio resources and includes at least some radio resources from the second signal source"

This term is recited in claims 4, 11 and 16. Petitioner has not met its burden to demonstrate that *Oh* discloses the term "wherein the first set of radio resources is a subset of the plurality of radio resources and includes at least some radio resources form the second signal source." Petitioner identifies a base station (BTS) as a signal source. In *Oh*, each base station has a respective coverage segment: "each coverage segment may be a cell or sector operating on a **respective RF frequency channel or coverage areas produced by respective base stations**." (Ex. 1003 at 3:1-4). If Petitioner asserts that a base station (BTS) is a signal source and a coverage segment is a radio resource in *Oh* (Pet. at 32), a second base station or signal source in *Oh* would not have multiple coverage segments such that a first set of radio resources includes "at least some radio resources from the second signal source." That is, a second base station would not have multiple coverage segments, but rather only *one*. (*See, e.g.*, Ex. 1003 at 50-52 ("A RAN coverage segment may be a cell, cell sector, or other coverage area of the RAN, defined by a directional radiation pattern from **a BTS** of the RAN")) (emphasis added). Petitioner has not met its burden of pointing out where this element can be found in *Oh*. Accordingly, this claim element is absent in *Oh*.

6. *Oh* fails to disclose a "baseband controller"

The term "baseband controller" is recited in claims 5 and 8-11. Petitioner has not met its burden to demonstrate that *Oh* discloses a "baseband controller." Claim 5 recites that "the baseband unit and at least one of the plurality of signal sources are part of a baseband controller." (Ex. 1001 at 14:43-45). Because *Oh* fails to disclose anything "baseband," including a "baseband unit," it also fails to disclose a "baseband controller" in these challenged claims.

Importantly, Petitioner attempts to mask this shortcoming by offering a circular and misplaced claim construction argument that improperly relies on the Procter Decl., claiming that "[t]he '499 Patent uses the term 'baseband controller' consistent with its ordinary meaning in the art of a small base transceiver station that directly connects to an antenna for communicating with wireless user devices, instead of using a distributed antenna system." (Pet. at 45 (*citing* Ex. 1017, ¶¶ 186-190)). This pseudo-construction of "baseband controller" undermines what little Petitioner has to say about claim 5. Accordingly, the Board should disregard this argument at least because it finds support only in the Procter Decl. without any underpinnings in *Oh*. Accordingly, a "baseband controller" is missing from *Oh*.

B. Ground 2: *Oh* in view of *Cannon* Fails to Support Obviousness Over the Challenged Claims

Petitioner has not shown a reasonable likelihood of success on Ground 2 to support a *prima facie* case of obviousness over the challenged claims 1-5, 8-11, 14-16 and 19. Specifically, Petitioner's obviousness arguments in Ground 2 that combine *Oh* and *Cannon* fail to remedy *Oh*'s deficiencies in Ground 1, and together still do not disclose, teach, or suggest each and every element of the challenged claims.

1. *Oh* and *Cannon* Fail to Disclose or Suggest Each and Every Claim Element

Oh does not disclose a "baseband unit." *See* Section V.A.1. Petitioner also does not identify a "baseband unit" in *Cannon*. (Pet. at 53-56). The combination of *Oh* and *Cannon*, therefore, fails to disclose, teach, or suggest a "baseband unit." In view of this missing element, Ground 2 should be denied.

Petitioner also fails to show that *Cannon* cures any of the missing elements in *Oh* as noted in Section V.A.1-6 above. For example, Petitioner's citation to the *Cannon* reference does not stand for the proposition that "digital" equates to "baseband," as discussed above in Section III.D, the Claim Construction section. The *Cannon* reference makes clear that "digitiz[ed] downlink and uplink RF signals are not analog RF signals but instead are digital data signals representing digital RF samples of a modulated RF signal." (Pet. at 56 citing Ex. 1004 at [0021]). On the

other hand, *Cannon* explains that "'digital baseband'... comprise[s] digital representations of an IF or baseband version of the original RF signal." (*Id*). According to *Cannon*, the term "digital RF" refers to digital representations of an RF signal, while "digital baseband" refers to digital representations of a baseband signal. (*Id*). In other words, both RF and baseband signals can each have digitized versions, but one is not synonymous with the other. Petitioner has not provided a proper basis for the assertion that "digital signals" in *Oh* necessarily equates to "baseband signals."

Accordingly, Petitioner cannot demonstrate that claims 1-5, 8-11, 14-16 and 19 are obvious over *Oh* and *Cannon*.

2. The Evidentiary Record Does Not Support a Motivation to Combine *Oh* and *Cannon*

Petitioner has not met its burden that a POSITA would combine *Oh* with *Cannon*. "Obviousness, however, requires 'a reason that would have prompted a person of ordinary skill in the relevant field to combine the elements in the way the claimed new invention does.'" *Johns Manville Corp. v. Knauf Insulation, Inc.*, IPR2018-00827, Paper 9 at 13 (PTAB Oct. 18, 2018) (*quoting KSR Int'l Co. v. Teleflex Inc.*, 550 U.S. 398, 418 (2007)) (informative). "An unsupported statement that combining the teachings of the two references would have been 'well within the skill of a POSITA,'" because the results "were well-known and predictable' does

not meet Petitioner's burden." *Intelligent Bio-Sys*., *Inc*. *v*. *Illumina Cambridge Ltd*., 821 F.3d 1359, 1367 (Fed. Cir. 2016).

Petitioner relies on *Cannon* "[t]o the extent that Patent Owner argues that Oh does not disclose a 'baseband unit,' it would have been obvious to a POSITA to modify *Oh* to use the 'digital baseband' output format mentioned in *Cannon* by using *Cannon*'s digital to analog translation (DART module) software instead of *Oh*'s." (Pet. at 54). Petitioner's *only* support for this statement comes in the Proctor Decl., which Petitioner improperly incorporates by reference into the Petition.

Indeed, a POSITA would look to *Cannon* and see that FIG. 1 discloses a distributed antenna system (DAS) 100 having a host unit 102 with a DART module 132 that communicates with a DART module 132 in remote units 106 over communication links 130. (Ex. 1004 at [0021]). And upon further review of *Cannon*, a POSITA would see that a DART module in remote unit 106 is specific for a particular frequency band – *i.e.*, "**frequency band adjustments** in a remote unit can be made by **replacing a DART module** covering one frequency band **with a DART module covering a different frequency band**." (Ex. 1004 at [0025]) (emphasis added).

Based on this reading of *Cannon,* a POSITA would understand that adjusting frequency bands require *replacing* DART modules. *Oh*, however, discloses changing mapping data to adjust coverage segments of base stations to IP addresses

of antenna units, not replacing DART modules. Petitioner has provided no reason or basis in the teachings of *Oh* or *Cannon* themselves that would motivate a POSITA to combine *Oh* and *Cannon* to have a "baseband unit" that allocates radio resources for communication of mobile user data. Accordingly, the evidentiary record does not support a motivation for a POSITA to combine *Oh* with *Cannon*.

Indeed, Petitioner does not address why a POSITA would have had a reasonable expectation of success in combining *Oh* and *Cannon*. Petitioner proposes "substitut[ing] *Oh*'s digital-to-analog software with *Cannon*'s" and only supports this combination with the conclusory statement that "it would be a simple substitution." (*Id.*). But one conclusory statement cannot backfill evidence for another, and Petitioner's failure to even attempt substantive argument regarding a motivation to combine outside of the Proctor Declaration reflects its failure to make a threshold showing of obviousness in Ground 2. Petitioner shows neither that "a skilled artisan would have been motivated to combine the teachings of the prior art references to achieve the claimed invention," or that "the skilled artisan would have had a reasonable expectation of success in doing so." *Johns Manville*, Paper 9 at 20. Therefore, the Board should not institute Ground 2 based at least on Petitioner's failure to provide evidentiary support to combine *Oh* with *Cannon*.

3. Petitioner Ignores the *Graham* Factors in Ground 2

Petitioner has failed to present a *prima facie* case of obviousness on which the Board could institute the Petition, even when reading all disputed facts and drawing all inferences in Petitioner's favor. In *Graham v. John Deere Co*., the Supreme Court held that a prima facie case of obviousness under 35 U.S.C. § 103 requires an analysis of "the scope and content of the prior art are to be determined; differences between the prior art and the claims at issue are to be ascertained; and the level of ordinary skill in the pertinent art resolved." *Graham v. John Deere Co*., 383 U.S. 1, 17 (1966). Petitioner does not mention, much less attempt to satisfy, the *Graham* factors for its obviousness grounds.

First, Petitioner is silent about what scope of *Oh* and *Cannon* it relies on for its allegations. The Petition merely states that: "[t]o the extent that Patent Owner argues that *Oh* does not disclose 'a base band unit' it would have been obvious to a POSITA to modify *Oh* to use the "digital baseband" output format taught by *Cannon* by using *Cannon*'s digital to analog translation (DART module) software instead of *Oh*'s." (Pet. at 53-54.) Petitioner says nothing about what aspect of *Oh* would allegedly be obvious to modify, much less why it would be obvious to do so. This improperly tries to shift the burden to Patent Owner and the Board to guess where Petitioner believes *Oh*'s disclosure ends and *Cannon*'s begins.

Second, Petitioner does not identify differences between the asserted prior art and the claims at issue. The Petition has only provided "[t]o the extent that Patent Owner argues that *Oh* does not disclose 'a base band unit,'" but does not offer any analysis of the differences between the claimed baseband unit and *Oh*. Instead, Petitioner offers a catch-all statement purporting to cover any potential differences between *Oh* and the claimed baseband unit. The Petition thus fails to lay out any differences between the prior art and the claims at issue with any kind of clarity, in violation of the standard set in *Graham*.

Petitioner similarly fails to address these *Graham* factors in its treatment of claims 8 and 14. (Pet. at 61-62, 64). And Petitioner's decision to ignore the *Graham* factors in independent claims 1, 8, and 14 flow through to its challenges of dependent claims 2-5, 9-11, 15, 16, and 19 for the same reasons. Petitioner thus does not show a reasonable likelihood of prevailing on any aspect of Ground 2.

C. Ground 3: *Oh* in view of *Fischer* Fails to Render Challenged Claims Obvious

Ground 3 seeks to challenge claims 5-8, 12, 13, 17, and 18 of the '499 patent as obvious over *Oh* in view of *Fischer*. But, as with Ground 2, Petitioner's attempt to combine *Oh* with *Fischer* does not make up for *Oh*'s deficiencies. Along the way, Petitioner again does not address the *Graham* factors and does not articulate any cognizable motivation to combine. Ground 3 should therefore be rejected.

1. *Oh* and *Fischer Fails* to Disclose or Suggest Each and Every Claim Element

As with its combination of *Oh* and *Cannon*, Petitioner's combination of *Oh* and *Fischer* does not cure *Oh*'s failure to discuss baseband. Petitioner offers only that "it would have been obvious to a POSITA to modify *Oh* by combining *Oh*'s DAS hub 26 (baseband unit) and base transceiver station (BTS) 18 (signal 67 source) into a baseband controller, following *Fischer*'s teaching . . . ." (Pet. at 66). But this argument presumes that Petitioner has already shown that "*Oh*'s DAS hub 26 (baseband unit)" satisfies the required disclosure of baseband. For the reasons shown in Section V.A.1, it does not.

2. Evidentiary Record Does not Support a Motivation to Combine *Oh* and *Fischer*

Petitioner offers no motivation to combine *Oh* and *Fischer*. As for claim 5, Petitioner merely argues that "it would have been obvious to a POSITA to modify *Oh* by combining *Oh*'s DAS hub 26 (baseband unit) and base transceiver station (BTS) 18 (signal 67 source) into a baseband controller, following *Fischer*'s teaching that 'in some embodiments, master host unit 104 is co-located with a base station' in order to meet the 'specific layout and location of the area or areas to be covered by system.' (EX1005 [0025], FIG. 1; EX1017 ¶262)" (Pet. at 66-67). In support of this assertion, the Petition offers only that "[a] POSITA . . . would be motivated to employ *Fischer*'s co-location technique to allow for single-site deployment of a

baseband controller that would allow for easier management of equipment in a single equipment room. (EX1017 ¶¶ 264-266.)" (*Id*.) The Petition does not explain why. Instead, it merely tries to incorporate three paragraphs of the Proctor Decl., but such an incorporation by reference is improper and should be ignored. Petitioner is asking the Board to guess why a person of ordinary skill in the art would "co-locate" *Oh*'s DAS hub and base transceiver system and to determine what "co-locate" would mean in this context.

Petitioner also does not explain why a POSITA would have had a reasonable expectation of success in combining *Oh* and *Fischer*. Petitioner asserts, without evidence, that "combining *Oh*'s DAS hub 26 (baseband unit) and base transceiver station (BTS) 18 (signal 67 source) into a baseband controller" and only provides that a POSITA "would be motivated to employ *Fischer*'s co-location technique to allow for single-site deployment of a baseband controller." Petitioner says nothing of the likelihood of success when combining elements of *Oh* according to the disclosures.

Claim 6 tells the same story. Petitioner again imports three paragraphs of the Proctor Decl. to allege that a "POSITA would be motivated to modify *Oh*'s system by adding a second DAS hub 26 in order to allow a larger deployment as part of a single platform as taught by *Fischer*, or to enable deployment into additional buildings by using the additional baseband unit. (EX1017 ¶269-271)." (Pet. at 69).

Without this declaration, Petitioner has no basis for combining *Oh* and *Fischer* in this context and has not identified a colorable ground for invalidity. Because Petitioner has thus failed to make a *prima facie case* that it has a reasonable likelihood of success on Ground 3, the Board should deny institution.

3. Petitioner Ignores the *Graham* Factors in Ground 3

Petitioner again does not identify what scope of *Oh* and *Fischer* it relies on for its obviousness challenge. The Petition merely states that "[t]o the extent that Patent Owner argues that *Oh* does not disclose a baseband controller, it would have been obvious to a POSITA to modify *Oh* by combining *Oh*'s DAS hub 26 (baseband unit) and base transceiver station (BTS) 18 (signal 67 source) into a baseband controller, following *Fischer*'s teaching that "in some embodiments, master host unit 104 is co-located with a base station" in order to meet the "specific layout and location of the area or areas to be covered by system." (EX1005 [0025], FIG. 1; EX1017 ¶262)." (Pet. at 66-67). This catch-all phrase cannot substitute the identification of the scope of each combined reference as required.

Petitioner bases its combination argument on the possibility that "*Oh* does not disclose a baseband controller," but does not identify what aspect of *Fischer* includes a baseband controller. (Pet. at 71). Instead, Petitioner says only that "it would have been obvious to a POSITA to modify *Oh* by combining *Oh*'s DAS hub 26 (baseband unit) and base transceiver station (BTS) 18 (signal 67 source) into a baseband

controller, following *Fischer*'s teaching that "in some embodiments, master host unit 104 is co-located with a base station." (Pet. at 66-67). Again, Petitioner improperly shifts the burden to Patent Owner and the Board to guess what scope of *Oh* and *Cannon* Petitioner relies on to advance this argument.

Moreover, Petitioner identifies no differences between the asserted art and the challenged claims. For example, Petitioner only asserts that: "[t]o the extent that Patent Owner argues that *Oh* does not disclose a baseband controller, it would have been obvious to a POSITA to modify *Oh* by combining *Oh*'s DAS hub 26 (baseband unit) and base transceiver station (BTS) 18 (signal 67 source) into a baseband controller, following *Fischer*'s teaching." (Pet. at 66-67). But Petitioner says nothing on why combining *Oh*'s DAS hub and base transceiver station to achieve the claimed baseband controller would be obvious. Petitioner is also silent about why *Fischer* is necessary when looking at the elements of the claims. Petitioner has thus failed to establish a *prima facie* case of obviousness for any challenged claim under Ground 3.

VI. CONCLUSION

Petitioner has not established a reasonable likelihood that it will prevail on Grounds 1-3 to establish that claims 1-19 of the '499 patent are unpatentable. Accordingly, Patent Owner requests that the Board deny institution of the *inter partes* review of the '499 patent.

Respectfully Submitted,

Dated: November 17, 2020

/s/ *S.H. Michael Kim*

S.H. Michael Kim (Reg. No. 40,450)
David D. Schumann (Reg. No. 53,569)
Michael C. Saunders (Reg No. 75,044)
Cliff Win, Jr. (*pro hac vice applied for*)
Folio Law Group (PLLC)
14512 Edgewater Lane NE
Lake Forest Park, WA 98155
Tel: (206) 512-9051

(Case No. IPR2020-01430)

Attorneys for Patent Owner

CERTIFICATION UNDER 37 CFR § 42.24(d)

Under the provisions of 37 CFR § 42.4(d), the undersigned hereby certifies that the word count for all portions of the foregoing Petition for *Inter Partes* Review totals 12,074 words per Microsoft Word, which complies with the requirement of 14,000 words allowed under 37 CFR § 42.24(b)(1).

Respectfully submitted,

Date: November 17, 2020

By: */S. H. Michael Kim/*

S. H. Michael Kim (Reg. No. 40,450)
Folio Law Group PLLC
Email: michael.kim@foliolaw.com
Tel: (650) 305-0514

Attorney for Patent Owner

CERTIFICATE OF SERVICE

As authorized by Petitioner's Mandatory Notice, I hereby certify that on November 17, 2020, a copy of this document has been served in its entirety by electronic mail on Petitioner's lead and backup counsel.

Philip P. Caspers
pcaspers@carlsoncaspers.com
Samuel A. Hamer
shamer@carlsoncaspers.com

Date: November 17, 2020

By: */S. H. Michael Kim/*

S. H. Michael Kim (Reg. No. 40,450)
Folio Law Group PLLC
Email: michael.kim@foliolaw.com
Tel: (650)305-0514

Attorney for Patent Owner