US008737454B2

(12) **United States Patent**
Wala et al.

(10) **Patent No.: US 8,737,454 B2**
(45) **Date of Patent: May 27, 2014**

(54) **MODULAR WIRELESS COMMUNICATIONS PLATFORM**

(75) Inventors: **Philip M. Wala**, Waseca, MN (US); **Robert J. Koziy**, Burnsville, MN (US); **Dean Zavadsky**, Shakopee, MN (US)

(73) Assignee: **ADC Telecommunications, Inc.**, Shakopee, MN (US)

(*) Notice: Subject to any disclaimer, the term of this patent is extended or adjusted under 35 U.S.C. 154(b) by 1140 days.

(21) Appl. No.: **11/627,251**

(22) Filed: **Jan. 25, 2007**

(65) **Prior Publication Data**

US 2008/0181282 A1 Jul. 31, 2008

(51) **Int. Cl.**
H04B 1/38 (2006.01)

(52) **U.S. Cl.**
USPC **375/220**

(58) **Field of Classification Search**
USPC 375/219, 220, 222, 259; 370/278, 282; 455/73, 88, 557, 560, 561
See application file for complete search history.

(56) **References Cited**

U.S. PATENT DOCUMENTS

3,931,473	A	1/1976	Ferris, Jr.
4,101,834	A	7/1978	Stutt et al.
4,112,488	A	9/1978	Smith, III
4,144,409	A	3/1979	Utano et al.
4,144,411	A	3/1979	Frenkiel
4,183,054	A	1/1980	Patisaul et al.
4,231,116	A	10/1980	Sekiguchi et al.
4,244,046	A	1/1981	Brouard et al.
4,354,167	A	10/1982	Terreault et al.
4,402,076	A	8/1983	Krajewski
4,451,699	A	5/1984	Gruenberg
4,451,916	A	5/1984	Casper et al.
4,456,793	A	6/1984	Baker et al.

(Continued)

FOREIGN PATENT DOCUMENTS

CA	2008900	1/1998
DE	3707244 A	9/1988

(Continued)

OTHER PUBLICATIONS

Wala, "A New Microcell Architecture Using Digital Optical Transport", "43rd IEEE Vehicular Technology Conference, Personal Communication—Freedom Through Wireless Technology", May 18-20, 1993, pp. 585-588, Publisher: IEEE, Published in: US.

(Continued)

Primary Examiner — Young T. Tse
(74) *Attorney, Agent, or Firm* — Fogg & Powers LLC

(57) **ABSTRACT**

A modular wireless communications platform is provided. The modular wireless communications platform has a modular host unit and a modular remote unit in communication with the modular host unit. The modular host unit has a serial radio frequency communicator configured to convert serial digital data into RF sampled data and configured to convert RF sampled data into serial digital data. The modular host unit also has an interface coupled to the serial radio frequency communicator and configured to allow transfer of the RF sampled data from the serial radio frequency communicator to a digital to analog radio frequency transceiver module. Likewise, the modular remote unit has a serial radio frequency communicator configured to convert serial digital data into RF sampled data and configured to convert RF sampled data into serial digital data. The modular remote unit also has an interface coupled to the serial radio frequency communicator and configured to allow transfer of the RF sampled data from the serial radio frequency communicator to a digital to analog radio frequency transceiver module.

20 Claims, 9 Drawing Sheets

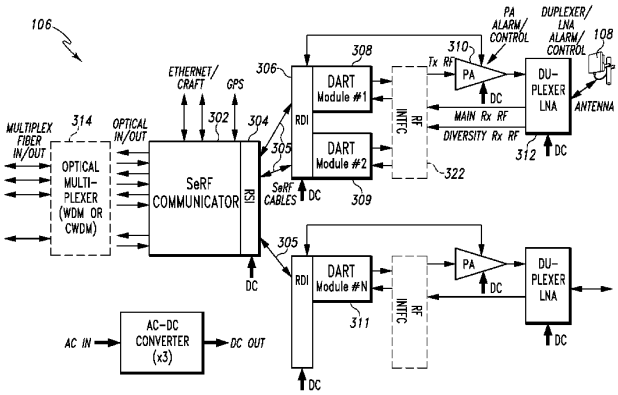

REMOTE MODULARITY

(56) **References Cited**

U.S. PATENT DOCUMENTS

4,475,010	A	10/1984	Huensch et al.
4,485,486	A	11/1984	Webb et al.
4,525,861	A	6/1985	Freeburg
4,531,239	A	7/1985	Usui
4,556,760	A	12/1985	Goldman
4,596,051	A	6/1986	Feldman
4,611,323	A	9/1986	Hessenmiiller
4,613,990	A	9/1986	Halpern
4,628,501	A	12/1986	Loscoe
4,654,843	A	3/1987	Roza et al.
4,667,319	A	5/1987	Chum
4,669,107	A	5/1987	Eriksson-Lennartsson
4,691,292	A	9/1987	Rothweiler
4,701,909	A	10/1987	Kavehrad et al.
4,704,733	A	11/1987	Kawano
4,718,004	A	1/1988	Dalal
4,754,451	A	6/1988	Eng et al.
4,759,051	A	7/1988	Han
4,760,573	A	7/1988	Calvignac et al.
4,790,000	A	12/1988	Kinoshita
4,794,649	A	12/1988	Fujiwara
4,797,947	A	1/1989	Labedz
4,816,825	A	3/1989	Chan et al.
4,831,662	A	5/1989	Kuhn
4,849,963	A	7/1989	Kawano et al.
4,916,460	A	4/1990	Powell
4,920,533	A	4/1990	Dufresne et al.
4,932,049	A	6/1990	Lee
4,959,829	A	9/1990	Griesing
4,977,593	A	12/1990	Ballance
4,999,831	A	3/1991	Grace
5,067,147	A	11/1991	Lee
5,067,173	A	11/1991	Gordon et al.
5,084,869	A	1/1992	Russell
5,136,410	A	8/1992	Heiling et al.
5,138,440	A	8/1992	Radice
5,159,479	A	10/1992	Takagi
5,175,867	A	12/1992	Wejke et al.
5,193,109	A	3/1993	Chien-Yeh Lee
5,243,598	A	9/1993	Lee
5,251,053	A	10/1993	Heidemann
5,267,261	A	11/1993	Blakeney, II et al.
5,272,700	A	12/1993	Hansen et al.
5,278,690	A	1/1994	Vella-Coleiro
5,280,472	A	1/1994	Gilhousen et al.
5,285,469	A	2/1994	Vanderpool
5,297,193	A	3/1994	Bouix et al.
5,299,198	A	3/1994	Kay et al.
5,301,056	A	4/1994	O'Neill
5,303,287	A	4/1994	Laborde
5,303,289	A	4/1994	Quinn
5,305,308	A	4/1994	English et al.
5,309,474	A	5/1994	Gilhousen et al.
5,313,461	A	5/1994	Ahl et al.
5,321,736	A	6/1994	Beasley
5,321,849	A	6/1994	Lemson
5,339,184	A	8/1994	Tang
5,381,459	A	1/1995	Lappington
5,392,453	A	2/1995	Gundmundson et al.
5,400,391	A	3/1995	Emura et al.
5,442,700	A	8/1995	Snell et al.
5,461,627	A	10/1995	Rypinski
5,519,691	A	5/1996	Darcie et al.
5,545,397	A	8/1996	Spielvogel
5,566,168	A	10/1996	Dent
5,577,029	A	11/1996	Lu et al.
5,586,121	A	12/1996	Moura et al.
5,587,734	A	12/1996	Lauder et al.
5,603,080	A	2/1997	Kallander et al.
5,621,786	A	4/1997	Fischer et al.
5,627,679	A	5/1997	Iba
5,627,879	A	5/1997	Russell et al.
5,631,916	A	5/1997	Georges et al.
5,642,405	A	6/1997	Fischer et al.
5,644,622	A	7/1997	Russell et al.
5,657,374	A	8/1997	Russell et al.
5,668,562	A	9/1997	Cutrer et al.
5,682,256	A	10/1997	Motley et al.
5,682,403	A	10/1997	Tu et al.
5,708,961	A	1/1998	Hylton et al.
D391,967	S	3/1998	Blais et al.
D391,968	S	3/1998	Shiozaki
5,732,076	A	3/1998	Ketseoglou et al.
5,734,699	A	3/1998	Lu et al.
5,734,979	A	3/1998	Lu
5,761,195	A	6/1998	Lu et al.
5,761,619	A	6/1998	Danne et al.
5,765,097	A	6/1998	Dail
5,765,099	A	6/1998	Georges et al.
5,774,789	A	6/1998	Van der Kaay et al.
5,781,541	A	7/1998	Schneider
5,781,582	A	7/1998	Sage et al.
5,781,859	A	7/1998	Beasley
D397,693	S	9/1998	Blais et al.
5,802,173	A	9/1998	Hamilton-Piercy et al.
5,805,983	A	9/1998	Naidu et al.
5,809,395	A	9/1998	Hamilton-Piercy et al.
5,818,824	A	10/1998	Lu et al.
5,822,324	A	10/1998	Kostresti et al.
5,842,138	A	11/1998	Lu et al.
5,852,651	A	12/1998	Fischer et al.
5,867,535	A *	2/1999	Phillips et al. 375/295
5,878,325	A	3/1999	Dail
5,883,882	A	3/1999	Schwartz
5,887,256	A	3/1999	Lu et al.
5,907,544	A	5/1999	Rypinski
5,930,682	A	7/1999	Schwartz et al.
5,946,622	A	8/1999	Bojeryd
5,953,651	A	9/1999	Lu et al.
5,969,837	A	10/1999	Farber et al.
5,983,070	A	11/1999	Georges et al.
5,987,014	A	11/1999	Magill et al.
5,999,813	A	12/1999	Lu et al.
6,005,884	A	12/1999	Cook et al.
6,014,546	A	1/2000	Georges et al.
6,034,950	A	3/2000	Sauer et al.
6,078,823	A	6/2000	Chavez et al.
6,081,716	A	6/2000	Lu
6,101,400	A	8/2000	Ogaz et al.
6,108,113	A	8/2000	Fee
6,108,550	A	8/2000	Wiorek et al.
6,108,626	A	8/2000	Cellario et al.
6,112,086	A	8/2000	Wala
6,147,786	A	11/2000	Pan
6,157,659	A	12/2000	Bird
6,157,810	A	12/2000	Georges et al.
6,169,907	B1	1/2001	Chang et al.
6,173,177	B1	1/2001	Lu et al.
6,181,687	B1	1/2001	Bisdikian
6,188,693	B1	2/2001	Murakami
6,192,216	B1	2/2001	Sabat, Jr. et al.
6,198,558	B1	3/2001	Graves et al.
6,212,395	B1	4/2001	Lu et al.
6,222,660	B1	4/2001	Traa
6,226,274	B1	5/2001	Reese et al.
6,262,981	B1	7/2001	Schmutz
6,269,255	B1	7/2001	Waylett
6,275,990	B1	8/2001	Dapper et al.
6,317,884	B1	11/2001	Eames et al.
6,337,754	B1	1/2002	Imajo
6,353,600	B1	3/2002	Schwartz et al.
6,362,908	B1	3/2002	Kimbrough et al.
6,373,887	B1	4/2002	Aiyagari et al.
6,374,124	B1	4/2002	Slabinski
6,377,640	B2	4/2002	Trans
6,381,463	B1	4/2002	Tu et al.
6,466,572	B1	10/2002	Ethridge et al.
6,480,551	B1	11/2002	Ohishi et al.
6,486,907	B1	11/2002	Farber et al.
6,498,936	B1	12/2002	Raith
6,535,732	B1	3/2003	McIntosh et al.
6,549,772	B1	4/2003	Chavez et al.
6,553,111	B1	4/2003	Wang
6,556,551	B1	4/2003	Schwartz

(56) **References Cited**

U.S. PATENT DOCUMENTS

6,567,473	B1	5/2003	Tzannes	
6,580,924	B1	6/2003	Lu et al.	
6,594,496	B2	7/2003	Schwartz	
6,597,912	B1	7/2003	Lu et al.	
6,640,108	B2	10/2003	Lu et al.	
6,658,259	B2	12/2003	McIntosh	
6,667,973	B1	12/2003	Gorshe et al.	
6,675,004	B1	1/2004	Waylett	
6,694,134	B1	2/2004	Lu et al.	
6,697,603	B1	2/2004	Lovinggood et al.	
6,729,929	B1	5/2004	Sayers et al.	
6,768,745	B1	7/2004	Gorshe et al.	
6,771,933	B1	8/2004	Eng et al.	
6,785,558	B1	8/2004	Stratford et al.	
6,801,767	B1	10/2004	Schwartz	
6,826,163	B2	11/2004	Mani et al.	
6,826,164	B2	11/2004	Mani et al.	
6,829,477	B1	12/2004	Lu et al.	
6,831,901	B2	12/2004	Millar	
6,847,653	B1	1/2005	Smiroldo	
6,907,048	B1	6/2005	Treadaway et al.	
6,912,409	B2	6/2005	Waylett	
6,917,614	B1	7/2005	Laubach et al.	
6,931,261	B2	8/2005	Waylett et al.	
6,963,552	B2	11/2005	Sabat, Jr. et al.	
6,967,966	B1	11/2005	Donohue	
7,016,308	B1	3/2006	Gallagher	
7,031,335	B1	4/2006	Donohue	
7,035,671	B2	4/2006	Solum	
7,127,175	B2	10/2006	Mani et al.	
7,205,864	B2	4/2007	Schultz, Jr. et al.	
7,215,651	B2	5/2007	Millar	
2002/0027892	A1 *	3/2002	Sasaki	370/335
2002/0167954	A1	11/2002	Highsmith et al.	
2002/0191565	A1	12/2002	Mani et al.	
2003/0015943	A1	1/2003	Kim et al.	
2003/0040335	A1	2/2003	McIntosh et al.	
2003/0043928	A1	3/2003	Ling et al.	
2003/0143947	A1	7/2003	Lyu	
2004/0008737	A1 *	1/2004	McClellan	370/535
2004/0010609	A1	1/2004	Vilander et al.	
2004/0037565	A1	2/2004	Young et al.	
2004/0062214	A1 *	4/2004	Schnack et al.	370/315
2004/0166898	A1	8/2004	Tajima	
2004/0196834	A1	10/2004	Ofek et al.	
2004/0198453	A1	10/2004	Cutrer et al.	
2005/0084076	A1 *	4/2005	Dhir et al.	379/55.1
2005/0088999	A1	4/2005	Waylett et al.	
2005/0147067	A1	7/2005	Mani et al.	
2005/0153712	A1	7/2005	Osaka et al.	
2005/0201323	A1	9/2005	Mani et al.	
2005/0250503	A1	11/2005	Cutrer	
2006/0026017	A1 *	2/2006	Walker	705/1
2006/0029171	A1 *	2/2006	Jensen	375/350
2006/0040615	A1	2/2006	Mohamadi	
2006/0111047	A1	5/2006	Louberg et al.	
2006/0128347	A1 *	6/2006	Piriyapoksombut et al.	455/333
2006/0221905	A1 *	10/2006	Behzad et al.	370/335
2006/0283952	A1 *	12/2006	Wang	235/462.01
2007/0127383	A1	6/2007	Borella	
2008/0014948	A1	1/2008	Scheinert	
2008/0058018	A1	3/2008	Scheinert	
2009/0129314	A1	5/2009	Weniger et al.	

FOREIGN PATENT DOCUMENTS

EP	0166885	1/1986
EP	0346925	12/1989
EP	0368673	5/1990
EP	0391597	10/1990
EP	0468688	1/1992
EP	0664621	7/1995
EP	0876073	11/1998
EP	1739871	3/2007
FR	2345865	10/1977
GB	2253770	9/1992
GB	2289198	11/1995
GB	2315959	2/1998
GB	2320653	6/1998
GB	2347319	8/2000
GB	2386037	9/2003
JP	58164007	9/1983
JP	326031	2/1991
JP	512374	1/1993
WO	9115927	10/1991
WO	9533350	12/1995
WO	9628946	9/1996
WO	9716000	5/1997
WO	9732442	9/1997
WO	9824256	6/1998
WO	9909769	2/1999
WO	9937035	7/1999
WO	0174013	10/2001
WO	0174100	10/2001
WO	03079645	9/2003
WO	2004006602	1/2004

OTHER PUBLICATIONS

Merrett et al., "A Cordless Access System Using Radio-Over-Fibre Techniques", "41st IEEE Vehicular Technology Conference Gateway to the Future Technology in Motion", May 19, 1991, pp. 921-924, Published in: St.Louis, MO.

Lee et al., "Intelligent Microcell Applications in PCS", "43rd IEEE Vehicular Technology Conference, Personal Communication—Freedom Through Wireless Technology ", May 18, 1993, pp. 722-725, Publisher: Pactel Corporation, Published in: Secaucus, NJ.

Telocator Bulletin, ""ADC Kentrox Introduces CityCell 824, A Replacement for Conventional Cell Sites"", Feb. 1, 1993, Published in: US.

ADC Kentrox, "ADC Kentrox Introducess Innovative Wireless Network Access Solution ", Mar. 1, 1993, Published in: US.

"ADC Kentrox Wireless Systems Group Citycell 824—A Positioning White Paper", Mar. 1993, Publisher: Cita Trade Show.

Akos et al., "Direct Bandpass Sampling of Multiple Distinct RF Signals", Jul. 1, 1999, pp. 983-988, vol. 47, Publisher: IEEE Transactions on Communications.

Cox, "A Radio System Proposal for Widespread Low-Power Tetherless Communications", "IEEE Transactions on Communications", Feb. 1991, pp. 324-335, vol. 39, No. 2, Publisher: IEEE.

Ameritech, "Broadband Optical Transport Digital Microcell Connection Service-Interface and Performance Specifications a Technical D", "Cellular Industry", Oct. 1993, pp. 1-26, Publisher: The Day Group.

ADC Kentrox, ""And Now a Few Words from Your Customers"", "Advertising Brochure", Aug. 1992, Published in: US.

1998 Foxcom Wireless Proprietary Information, "Application Note "RFiber—RF Fiberoptic Links for Wireless Applications"", , pp. 3-11, Published in: US.

Doulas D. Tang, "Fiber Optic Antenna Remoting for Multi-Sector Cellular Cell Sites", Jul. 9, 1993, Published in: US.

Steele, "Towards a High-Capacity Digital Cellular Mobile Radio System", Aug. 1995, Published in: US.

Titch, "Kentrox Boosts Coverage and Capacity", "Telephony", Jan. 25, 1993.

ADC, "First Field Trial Results Exceed Expectations", Mar. 2, 1993, Published in: US.

Kobb, ""Personal Wireless" Special Report/Communications IEEE Spectrum", Jun. 1, 1993, pp. 20-25.

Gupta et al., "Land Mobile Radio Systems—A Tutorial Exposition", "IEEE Communications Magazine", Jun. 1985, pp. 34-45, vol. 23, No. 6, Publisher: IEEE.

Foxcom Wireless Properietary Information, "Litenna In-Building RF Distribution System", 1998, pp. 1-8, Publisher: Foxcom Wireless.

Schneiderman, "Offshore Markets Gain in Size, Competitiveness Even the Smallest Industry Companies are Expanding Their Global Buisness", "Microwaves and RF", Mar. 1993, pp. 33-39, vol. 32, No. 3, Publisher: Penton Publishing, Inc, Published in: Berea, OH.

(56) **References Cited**

OTHER PUBLICATIONS

"Digital Transport for Cellular", "Microwaves and RF", Feb. 1993, Published in: Portland, OR.
Russell, "New Microcell Technology Sets Cellular Carriers Free", "Telephony", Mar. 1993, pp. 40, 42, and 46.
"Tektronix Synchronous Optical Network (SONET)", "http://www.iec.org/online/tutorials/sonet/topic03.html", 2002, Publisher: International Engineering Consortium.
David Russel, "New Microcell Technology Sets Cellular Carriers Free", Mar. 1993, Published in: US.
O'Byrne, "TDMA and CDMA in a Fiber-Optic Environment", "Vehicular Technology Society 42nd VTS Conference Frontiers of Technology From Pioneers to the 21st Century", May 10-13, 1992, pp. 727-731, vol. 2 of 2, Publisher: GTE Laboratories Inc., Published in: Denver, CO.
Zonemaster, "Maximum Coverage for High-Capacity Locations", "1993 Decibel Products", 1993, pp. 1-4, Publisher: Decibel Multi Media Microcell System.
Grace, Martin K., "Synchronous Quantized Subcarrier Multiplexing for Transport of Video, Voice and Data", "IEEE Journal on Selected Areas in Communications", Sep. 1990, pp. 1351-1358, vol. 8, No. 7, Publisher: IEEE.
Harvey et al., "Cordless Communications Utilising Radio Over Fibre Techniques for the Local Loop", "IEEE International Conference on Communications", Jun. 1991, pp. 1171-1175, Publisher: IEEE.
International Searching Authority, "International Search Report", Nov. 10, 2008, Published in: WO.
Ishio et al. , "A Two-Way Wavelength-Division-Multiplexing Transmission and Its Application to a Switched TV-Distribution System", Dec. 22, 2000, Publisher: Ekectrical Communication Laboratories, Nipon Telegraph and Telepone Corporation , Published in: Yokosuka, Japan.
City Cell, Cellular Industry The Day Group, "ADC Kentrox Citycell Field Trial Yields Another First—Simultaneous Analog and Digital Calls", prior to Dec. 22, 2000.
"Urban Microcell System Layout", Dec. 3, 2004.
Nakatsugawa et al., "Software Radio Base and Personal Stations for Cellular/PCS Systems", 2000, pp. 617-621, Publisher: IEEE.
Cellular Industry, The Day Group, "New Signal Transport Technology Digitizes the Cellular Band", Dec. 22, 2000.
Chinese Patent Office, "Office Action", Jan. 18, 2012, Published in: CN.
International Preliminary Examining Authority, "International Preliminary Report on Patentability", "from Foreign Counterpart of U.S. Appl. No. 11/627,251", Aug. 6, 2009, pp. 1-5, Published in: WO.
U.S. Patent and Trademark Office, "Final Office Action", "U.S. Appl. No. 11/627,255", Sep. 8, 2010, pp. 1-14.
U.S. Patent and Trademark Office, "Office Action", "U.S. Appl. No. 11/627,255", Mar. 10, 2010, pp. 1-43.
International Searching Authority, "International Search Report and Written Opinion", "from Foreign Counterpart of U.S. Appl. No. 11/627,255", Mailed Jul. 24, 2008, pp. 1-14, Published in: WO.
U.S. Patent and Trademark Office, "Office Action", "U.S. Appl. No. 11/627,255", Nov. 6, 2012, pp. 1-28.
Chinese Patent Office, "Second Office Action", Aug. 15, 2012, pp. 1-14, Published in: CN.
Chinese Patent Office, "Notification to Grant Patent Right for Invention", "from Foreign Counterpart of U.S. Appl. No. 11/627,251", Dec. 26, 2012, pp. 1-4, Published in: CN.
U.S. Patent and Trademark Office, "Final Office Action", "U.S. Appl. No. 11/627,255", May 9, 2013, pp. 1-23.

* cited by examiner

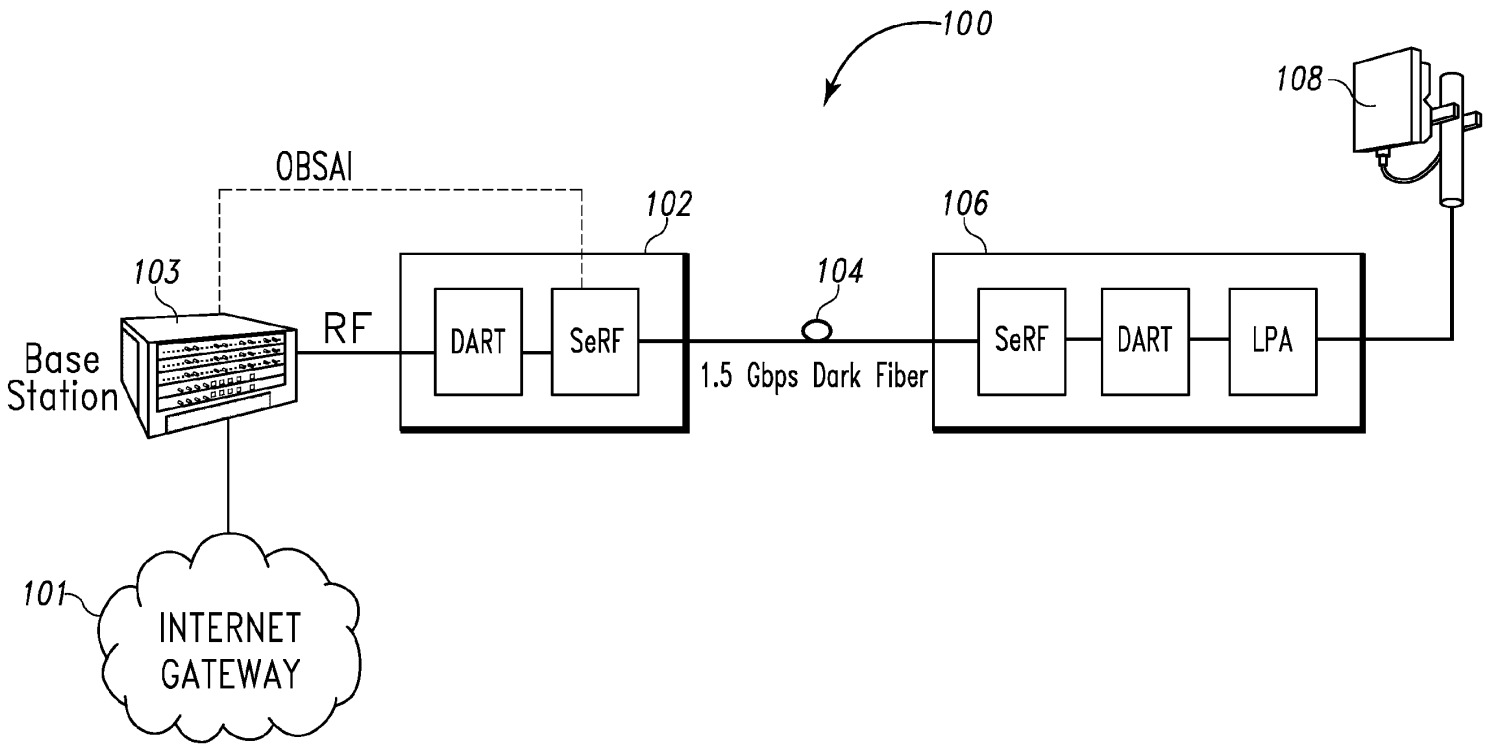
100
108
OBSAI
102
106
103
104
Base Station
RF
DART
SeRF
1.5 Gbps Dark Fiber
SeRF
DART
LPA
101
INTERNET GATEWAY

Fig. 1

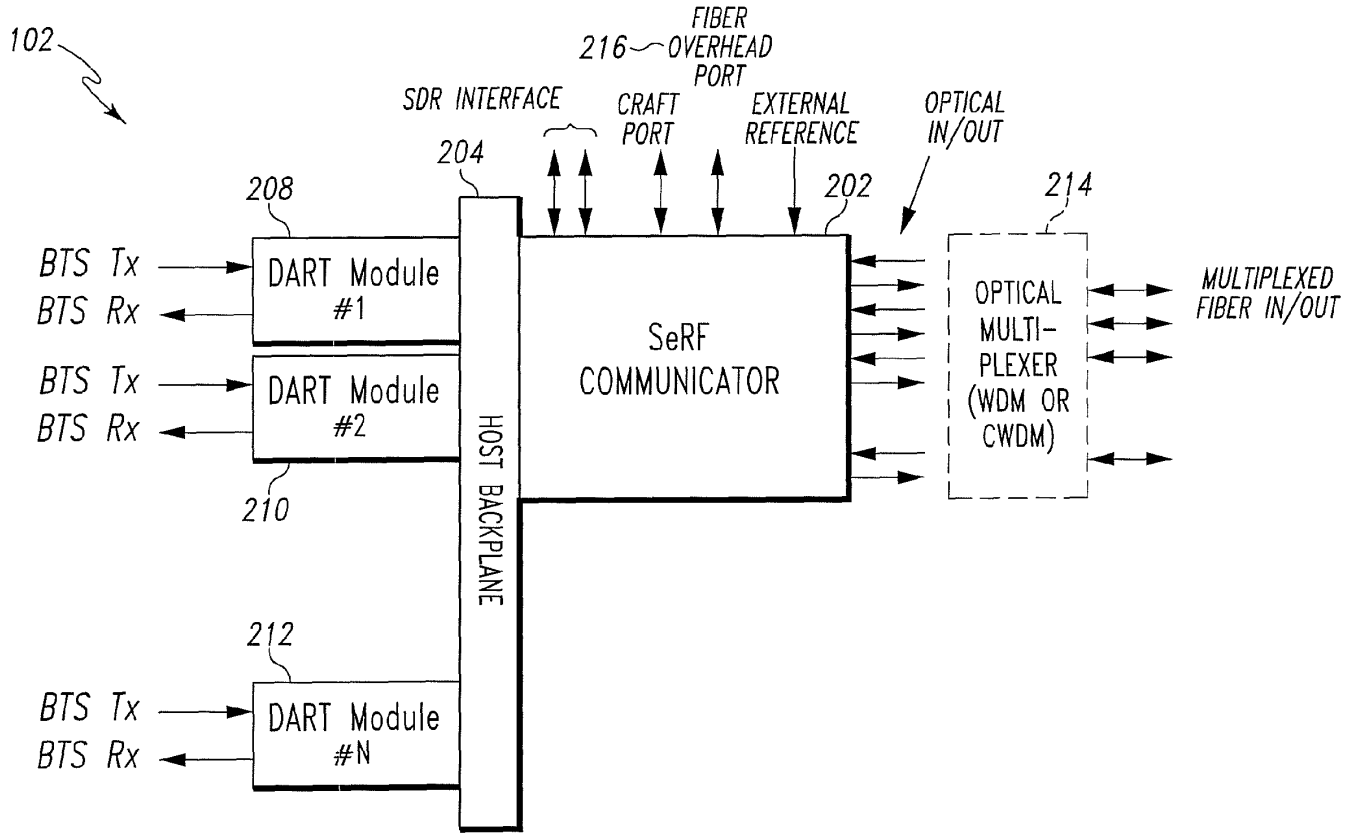

HOST MODULARITY

Fig. 2

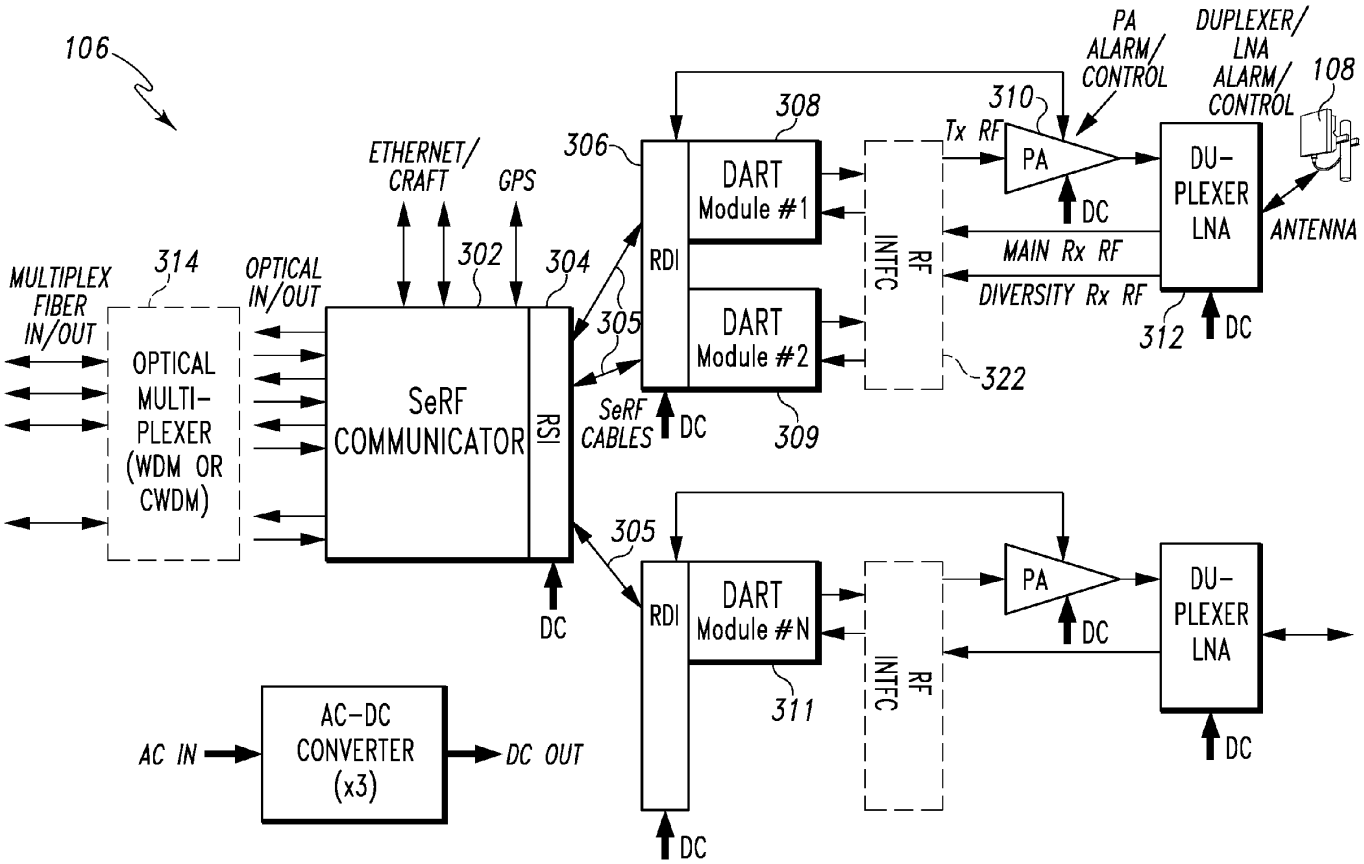

Fig. 3

REMOTE MODULARITY

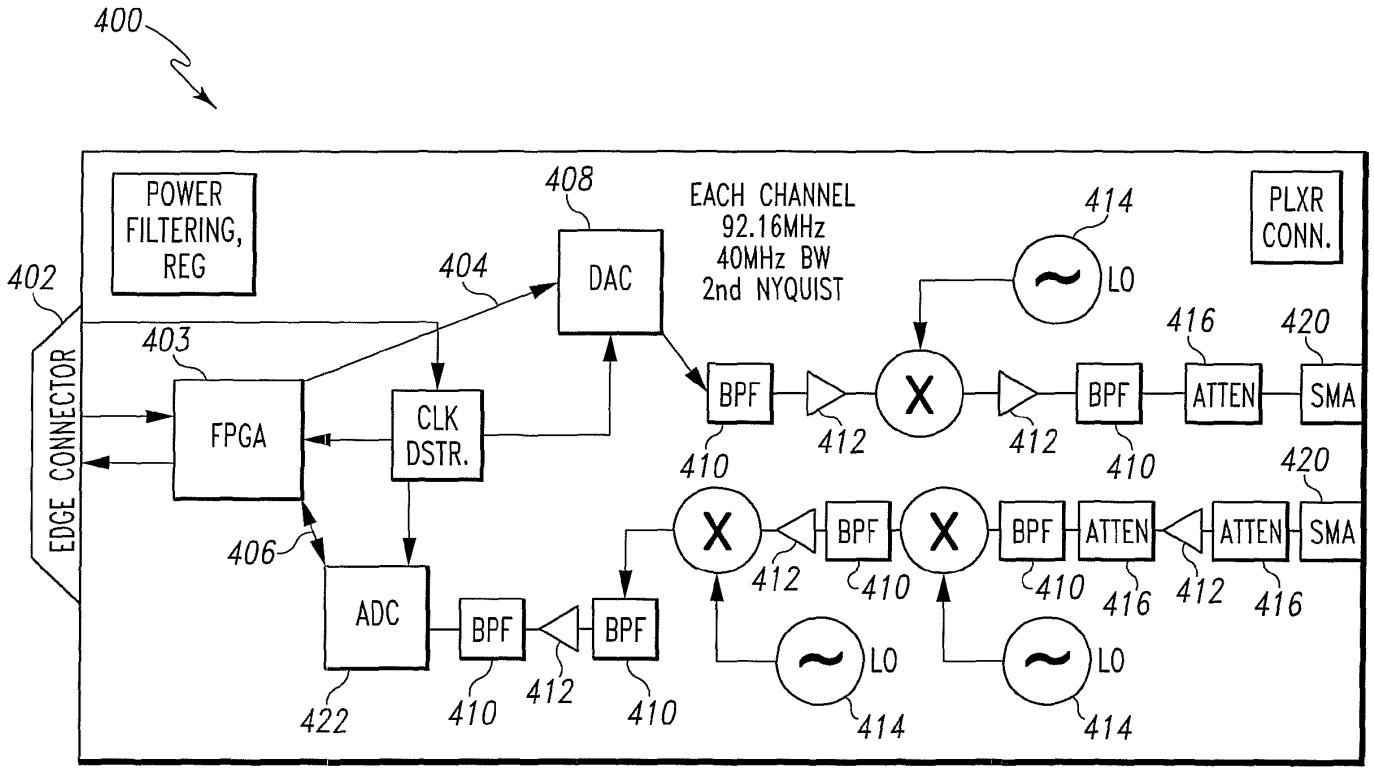

DART MODULE FUNCTIONALITY

Fig. 4

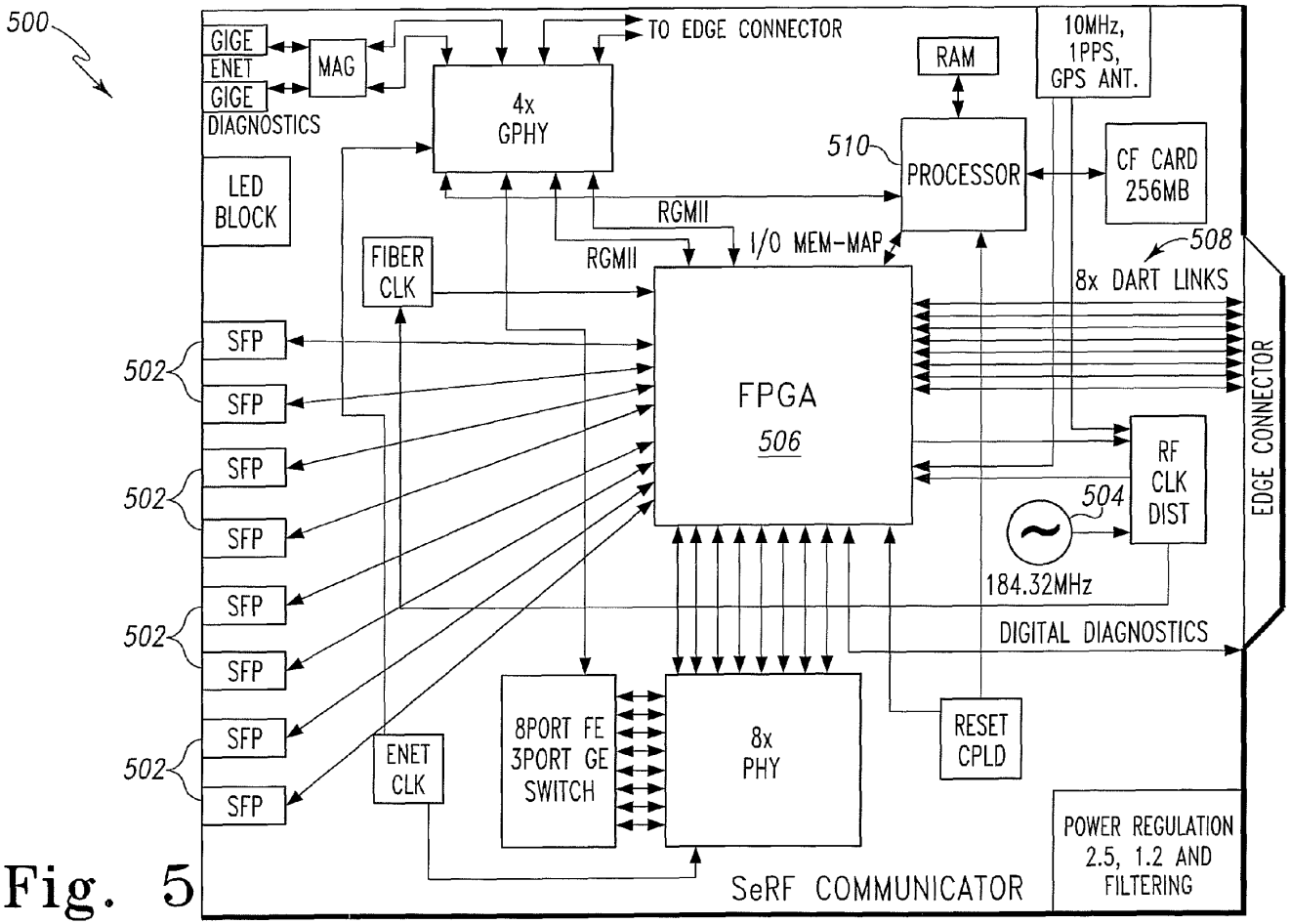
500
GIGE
ENET
GIGE
DIAGNOSTICS
MAG
TO EDGE CONNECTOR
4x
GPHY
RAM
10MHz,
1PPS,
GPS ANT.
510
PROCESSOR
CF CARD
256MB
LED
BLOCK
RGMII
RGMII
I/O MEM-MAP
508
8x DART LINKS
FIBER
CLK
SFP
502
FPGA
506
EDGE CONNECTOR
RF
CLK
DIST
504
184.32MHz
DIGITAL DIAGNOSTICS
8PORT FE
3PORT GE
SWITCH
8x
PHY
RESET
CPLD
ENET
CLK
POWER REGULATION
2.5, 1.2 AND
FILTERING
SeRF COMMUNICATOR

Fig. 5

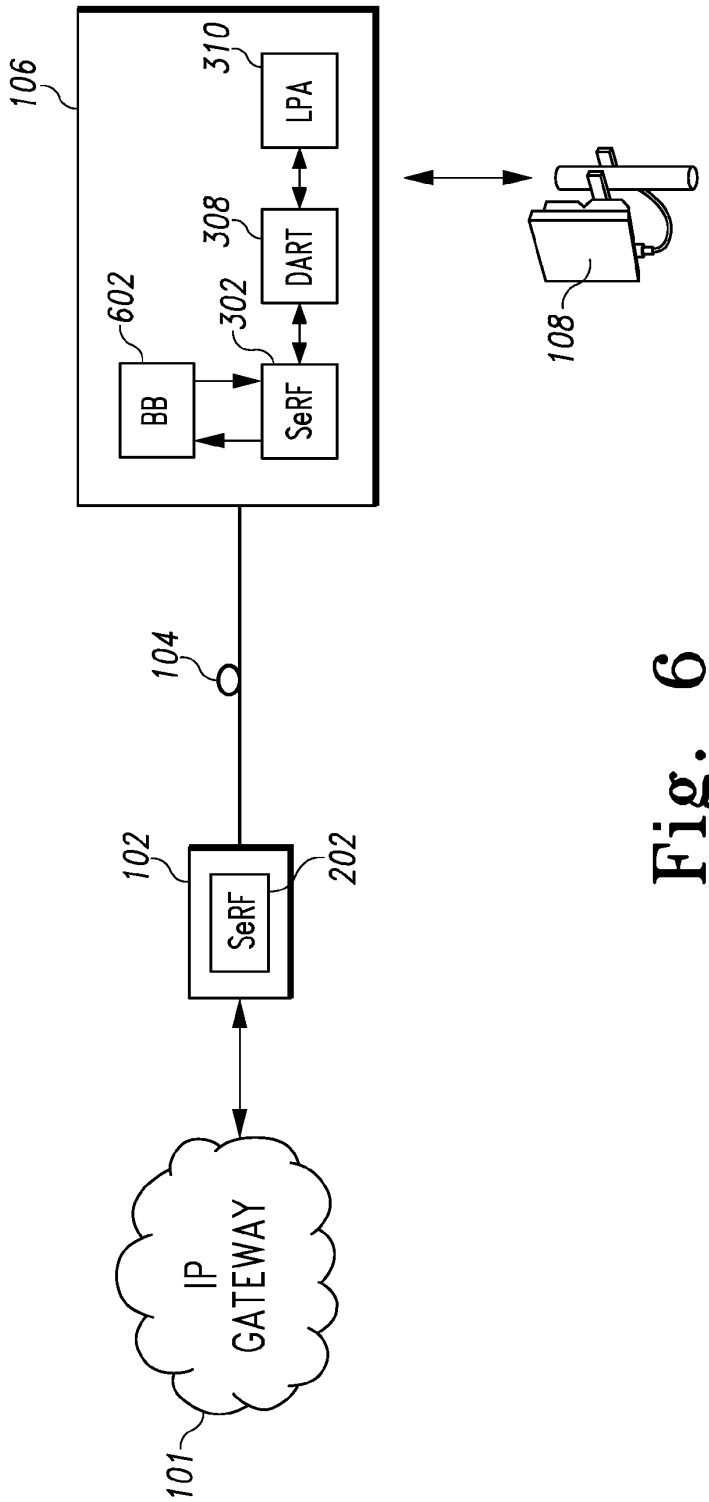
106
310
LPA
308
DART
602
302
BB
SeRF
108
104
102
SeRF
202
IP
GATEWAY
101

Fig. 6

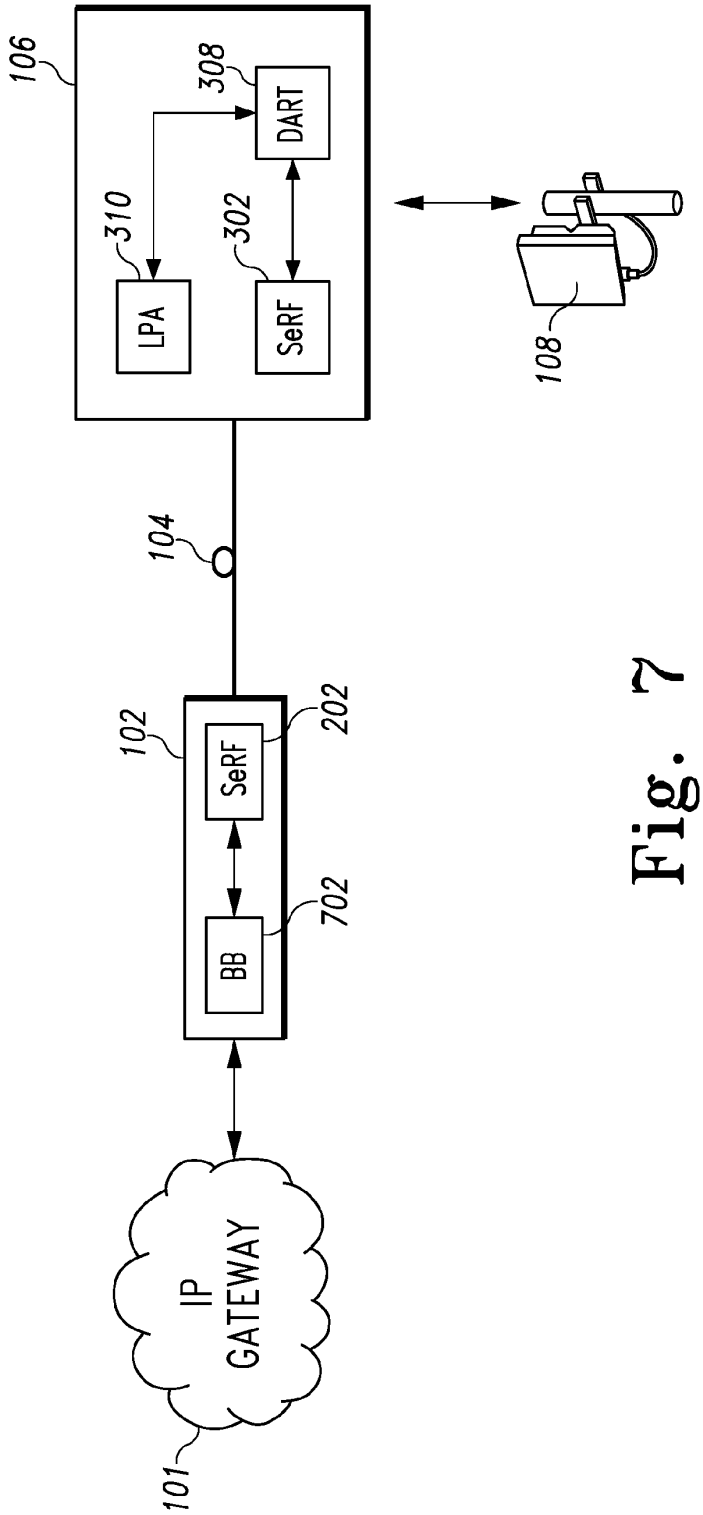
106
308
DART
310
302
LPA
SeRF
108
104
102
SeRF
202
BB
702
IP
GATEWAY
101

Fig. 7

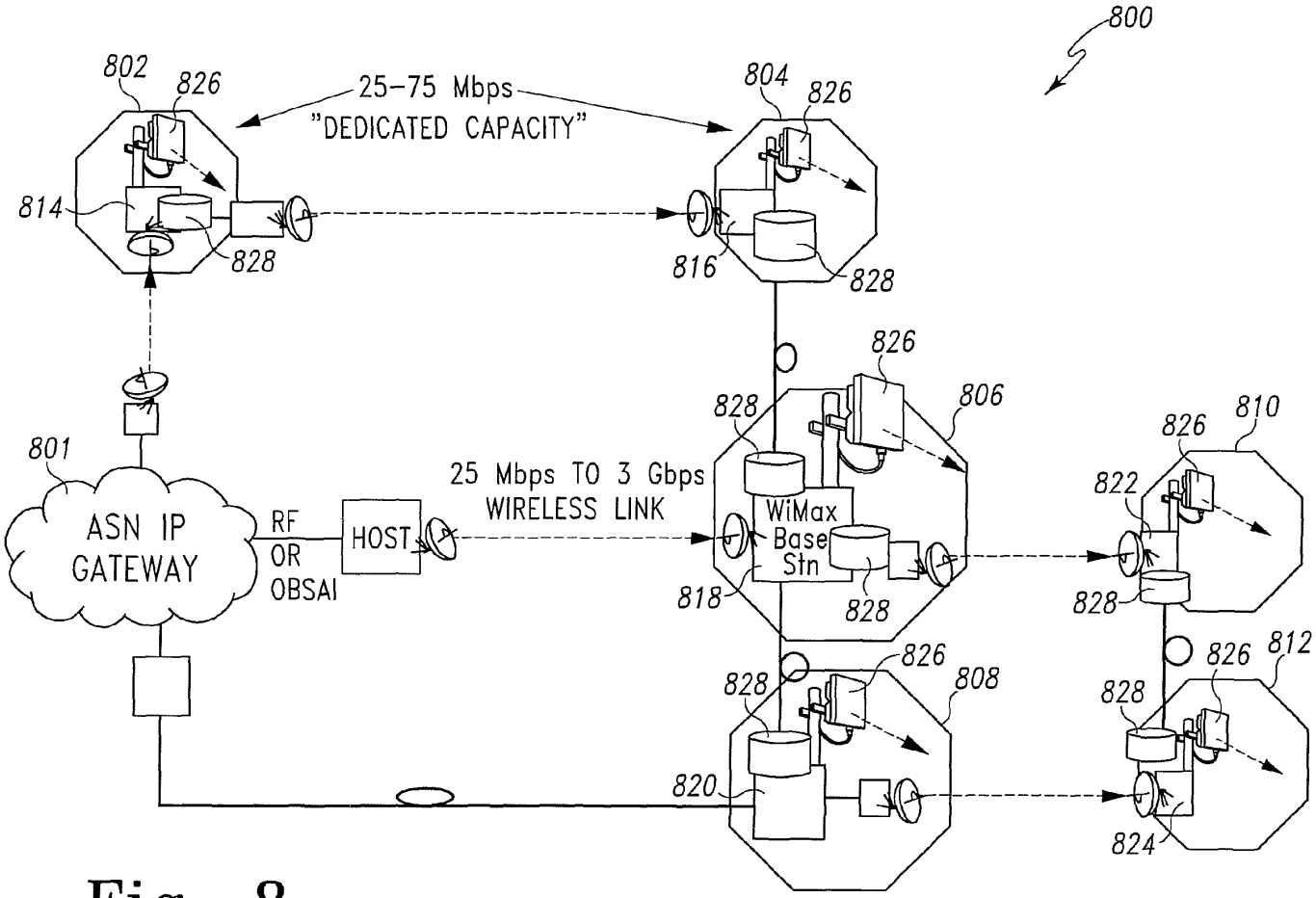
800
802
826
25-75 Mbps
"DEDICATED CAPACITY"
804
826
814
828
816
828
826
828
806
826
810
801
25 Mbps TO 3 Gbps
WIRELESS LINK
822
ASN IP
GATEWAY
RF
OR
OBSAI
HOST
WiMax
Base
Stn
818
828
828
826
826
812
828
808
828
820
824

Fig. 8

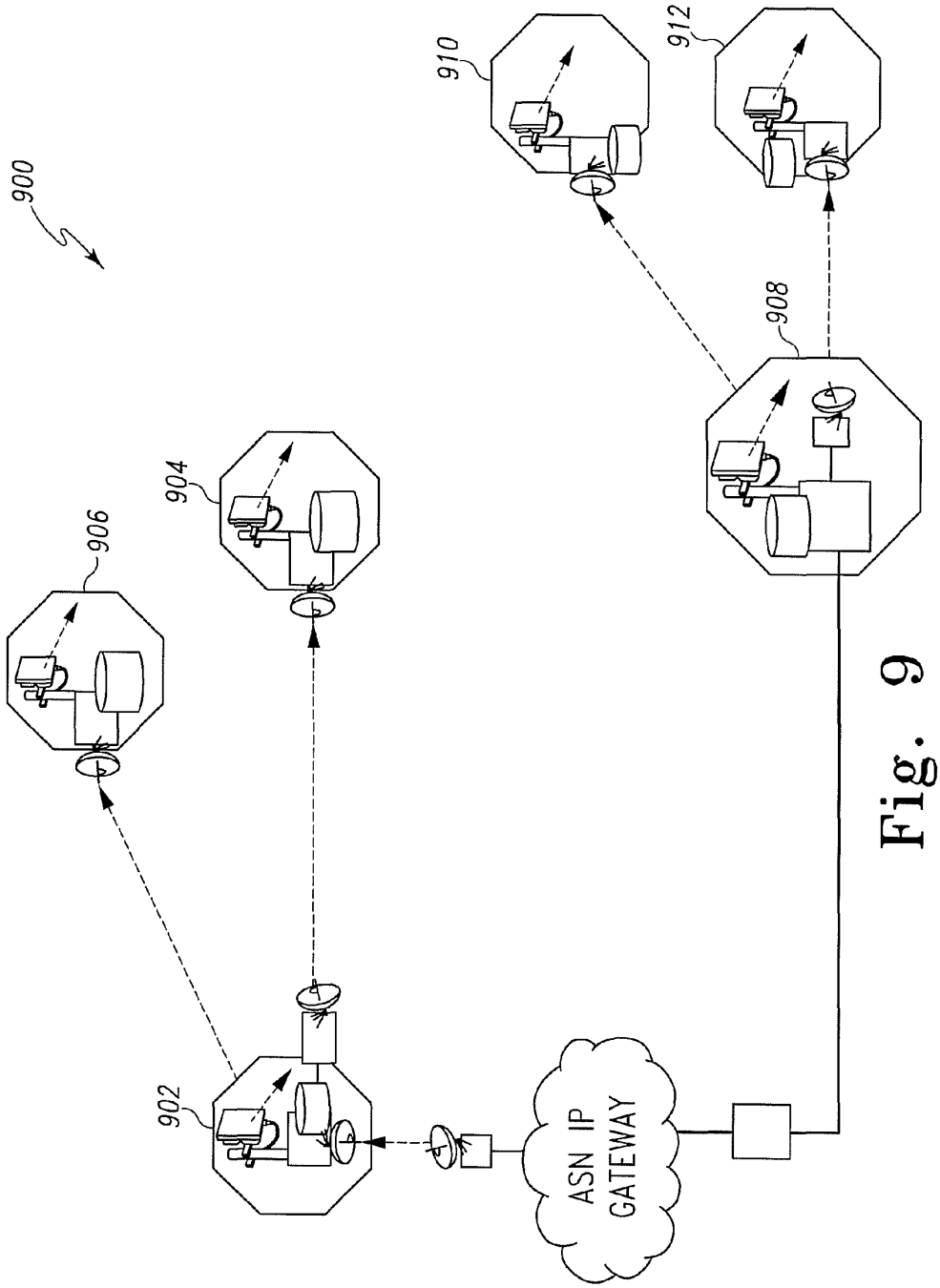

Fig. 9

MODULAR WIRELESS COMMUNICATIONS PLATFORM

RELATED APPLICATIONS

This application is related to the following commonly assigned applications filed on even date herewith, each of which is hereby incorporated herein by reference:

U.S. patent application Ser. No. 11/627,255, entitled "DISTRIBUTED REMOTE BASE STATION SYSTEM" (the '829 Application).

BACKGROUND

Technology is continually evolving as consumer needs change and new ideas are developed. Nowhere is this more apparent than in the wireless communications industry. Wireless communication technologies have changed drastically over the recent past and have affected many aspects of our daily lives. As new wireless technologies are developed, companies must invest large amounts of time and resources to upgrade all their existing hardware so that it is compatible with the new technology. Often a change in one component of a system requires an update of the entire system.

The infrastructure of a wireless communication system is commonly designed for a specific technology and a specific frequency band. Thus, once a service provider installs a particular infrastructure, a complete overhaul of a system is required to upgrade to a new technology or change to another frequency band. In addition, if a service provider would like to carry multiple frequency bands, the provider generally has to install a different set of hardware for each technology and frequency band carried. Thus, if the service provider carries four frequency bands of service for mobile customers; four different sets of hardware must be installed in each transmission and reception location.

In addition to changes in technology, consumer demand for a particular service may change after a service is installed. For example, access points initially deployed using over-the-air repeaters or simulcast distributed antenna systems, may need to be replaced with full base stations to support the increased consumer demand. This again, will require major overhauls of existing infrastructure. Moreover, these changes occur not infrequently, are costly and are often necessary to keep pace with competitors within the industry.

For the reasons stated above, and for other reasons stated below which will become apparent to those skilled in the art upon reading and understanding the present specification, there is a need in the art for a wireless communications platform that keeps pace with the rapid changes in wireless communications protocols.

SUMMARY

The above-mentioned problems of current systems are addressed by embodiments of the present invention and will be understood by reading and studying the following specification. The following summary is made by way of example and not by way of limitation. It is merely provided to aid the reader in understanding some of the aspects of the invention. In one embodiment, a modular wireless communications platform is provided. The modular wireless communications platform has a modular host unit and a modular remote unit in communication with the modular host unit. The modular host unit has a serial radio frequency communicator configured to convert serial digital data into RF sampled data and configured to convert RF sampled data into serial digital data. The modular host unit also has an interface coupled to the serial radio frequency communicator and configured to allow transfer of the RF sampled data from the serial radio frequency communicator to a digital to analog radio frequency transceiver module. Likewise, the modular remote unit has a serial radio frequency communicator configured to convert serial digital data into RF sampled data and configured to convert RF sampled data into serial digital data. The modular remote unit also has an interface coupled to the serial radio frequency communicator and configured to allow transfer of the RF sampled data from the serial radio frequency communicator to a digital to analog radio frequency transceiver module.

BRIEF DESCRIPTION OF THE DRAWINGS

The present invention can be more easily understood and further advantages and uses thereof more readily apparent, when considered in view of the detailed description and the following figures in which:

FIG. **1** is an illustration of one embodiment of a system using a modular wireless communications platform;

FIG. **2** illustrates a schematic view of one embodiment of a host unit for use in the system of FIG. **1**;

FIG. **3** illustrates a schematic view of one embodiment of a remote unit for use in the system of FIG. **1**;

FIG. **4** illustrates a schematic view of one embodiment of a digital to analog radio frequency transceiver module for use in either the host unit of FIG. **2** or the remote unit of FIG. **3**;

FIG. **5** illustrates a schematic view of one embodiment of a serial radio frequency communicator for use in either the host unit of FIG. **2** or the remote unit of FIG. **3**;

FIG. **6** illustrates another configuration of the system of FIG. **1**;

FIG. **7** illustrates yet another configuration of the system of FIG. **1**;

FIG. **8** illustrates one embodiment of a distributed base station system; and

FIG. **9** illustrates another embodiment of a distributed base station system.

In accordance with common practice, the various described features are not drawn to scale but are drawn to emphasize specific features relevant to the present invention. Reference characters denote like elements throughout Figures and text.

DETAILED DESCRIPTION

In the following detailed description, reference is made to the accompanying drawings that form a part hereof, and in which is shown by way of illustration specific illustrative embodiments in which the device may be practiced. These embodiments are described in sufficient detail to enable those skilled in the art to practice the invention, and it is to be understood that other embodiments may be utilized and that logical, mechanical and electrical changes may be made without departing from the spirit and scope of the present invention. The following detailed description is, therefore, not to be taken in a limiting sense.

The present apparatus is a modular wireless platform that enables a system facilitator to easily and inexpensively adapt their wireless system for use with different data transport mechanisms, frequency bands, communication technologies, and intelligence distribution. This modular platform is made up of a reconfigurable host unit and a reconfigurable remote unit designed for use in a system with a central node and a plurality of distributed antennas. The host unit is located near the central node and facilitates transmission/reception of

information to/from the remote units which are located remotely with an accompanying antenna. The remote units function to transmit/receive transmissions from the host unit and transmit/receive wireless signals over accompanying antenna to mobile costumers.

Host unit and remote unit have a modular design and defined interfaces that allow components to be removed and installed to adapt to the needs of the service providers. Both host and remote unit are designed around a serial radio frequency (SeRF) communicator and have a defined interface where different varieties of digital to analog radio frequency transceiver (DART) modules can be connected and disconnected. There are many different DART modules, and each DART module is designed for a particular technology and frequency band. Thus, technology and frequency band adjustments can be made by simply replacing the DART module in the host unit or remote unit. Additionally, host unit and remote unit are designed to allow different transport mechanisms between the host unit and remote unit. For example, the same host unit and remote unit that use fiber optic for inter-unit transmission can be adapted to use E Band wireless transmission instead of or concurrently with the fiber optic. Finally, wireless processing functionality can be placed all on a base station near the central node, or the functionality can be distributed throughout each of the remote units. The flexibility to modify the functionality of each remote unit allows the wireless platform to support centralized base stations and distributed base stations, either separately or concurrently.

FIG. **1** is a block diagram of one embodiment of a system **100** using a modular wireless communications platform. System **100** is a field configurable distributed antenna system (DAS) that provides bidirectional transport of a fixed portion of RF spectrum from an Internet Protocol (IP) gateway **101** to a remote antenna **108**. Along with IP gateway **101** and remote antenna **108**, system **100** includes a base station **103**, a host unit **102**, a transport mechanism **104**, and a remote unit **106**. Host unit **102**, a modular host transceiver and remote unit **106**, a modular remote radio head, work together to transmit and receive data to/from remote antennas. In this embodiment, host unit **102** provides the interface between a base station **101** a signal transport mechanism **104**. Remote unit **106** provides the interface between transport mechanism **104** and a remote antenna **108**. In this embodiment, signal transport mechanism **104** is an optical fiber, and host unit **102** sends optical signals through the optical fiber to remote unit **106**.

In the transmission direction of transport, base station **103** performs baseband processing on IP data from IP gateway and places the IP data onto a channel. In one embodiment base station **103** is an IEEE 802.16 compliant base station. Optionally, base station **103** may also meet the requirements of WiMax, WiBro, or a similar consortium. In another embodiment, base station **103** is an 800 MHz or 1900 MHz base station. In yet another embodiment, the system is a cellular/PCS system and base station **103** communicates with a base station controller. In still another embodiment, base station **103** communicates with a voice/PSTN gateway. Base station **103** also creates the protocol and modulation type for the channel. Base station **103** then converts the IP packetized data into an analog RF signal for transmission over antenna **108**. Base station **103** sends the RF signal to host unit **102**. Host unit **102** converts the RF signal for long distance high speed transmission over transport mechanism **104**. Host unit **102** sends the signal over transport mechanism **104**, and the signal is received by remote unit **106**. Remote unit **106** converts the received signal back into an RF signal and transmits the signal over antenna **108** to consumer mobile devices.

FIG. **2** illustrates a schematic diagram of one embodiment of a host unit **102** for use in a modular wireless communications platform. Host unit **102** has a serial radio frequency (SeRF) communicator **202** that is coupled to a digital to analog radio frequency transceiver (DART) interface **204**. DART interface **204** has a plurality of DART connectors each of which is configured to receive a pluggable DART module **208**. Further, DART connectors are configured to connect DART module **208** to SeRF communicator **202**. DART interface **204** is a common interface that is configured to allow communication between SeRF communicator **202** and different varieties of DART modules **208**. Additionally, DART interface **204** allows multiple DART modules **208**, **210**, **212** to connect to a single SeRF communicator **202**. In this embodiment, DART interface **204** is a passive host backplane to which SeRF communicator **202** also connects. In this embodiment, DART interface **204** has eight DART connectors for a DART module **208**. In another embodiment, instead of being a host backplane, DART interface **204** is integrated with SeRF communicator **202**.

DART modules **208**, **210**, **212** provide bi-directional conversion to/from analog RF signals from/to digital sampled RF. In one direction of communication, DART module **208** receives an incoming analog RF signal from base station **103** and converts the analog signal to a digital signal for use by SeRF communicator **202**. In the other direction DART modules **208**, **210**, **212** receive digital sampled RF data from SeRF communicator **202** and convert the data to analog RF for use by base station **103**.

Each DART module **208**, **210**, **212** has a common communication interface for communication with SeRF communicator **202**, and a RF processing portion that is exclusive to one frequency band and communication technology. Each DART module **208**, **210**, **212**, therefore, converts to/from one analog RF to the digital signal used by SeRF communicator. For example, DART module **208** is designed to transmit 850 MHz cellular transmissions. As another example, DART module **210** transmits 1900 MHz PCS signals. Some of the other options for DART modules **208**, **210**, **212** include Nextel 800 band, Nextel 900 band, PCS full band, PCS half band, BRS, WiMax, and the European GSM 900, DCS 1800, and UMTS 2100. By allowing different varieties of DART modules **208**, **210**, **212** to be plugged into DART interface **206**, host unit **102** is configurable to any of the above frequency bands and technologies as well as any new technologies or frequency bands that are developed. Host unit **102**, once installed, is field configurable to transmit a variety desired by insertion of a different DART module. Additionally, since SeRF communicator **202** is configured to communicate with multiple different DART modules **208**, **210**, **212**, a single host unit **102** can transmit/receive multiple frequency bands or technologies.

SeRF communicator **202** provides bi-directional conversion to/from a SeRF stream from/to a high speed optical serial data stream. In one direction, SeRF communicator **202** receives incoming SeRF streams from DART modules **208**, **210**, **212** and sends a serial optical data stream over transport mechanism **104** to remote unit **106**. In the other direction, SeRF communicator **202** receives an optical serial data stream from a remote unit **106** and provides SeRF streams to DART modules **208**, **210**, **212**. In one embodiment, the SeRF stream between DART module **208** and SeRF communicator is a parallel stream. In another embodiment, SeRF stream is a serial data stream.

SeRF communicator **202** also allows multiple DART modules **208**, **210**, **212** to operate in parallel. SeRF communicator **202** actively multiplexes the signals from each DART module

208, 210, 212 such that they are sent simultaneously over a single transport mechanism 104. To accomplish this, SeRF communicator 202 presents a clock signal to each DART module 208, 210, 212 to ensure synchronization.

In one embodiment, an optical multiplex module 214 is optically coupled to SeRF communicator 202. Optical multiplex module 214 performs multiplexing/de-multiplexing of an optical serial data stream to/from SeRF communicator 202 over transport mechanism 104. In this embodiment, optical multiplex module 214 performs wavelength division multiplexing.

In another embodiment, transport mechanism 104 is a wireless millimeter wave signal transceiver (e.g. E Band/70 GHz radio). In this embodiment, host unit 102 sends optical signals to the millimeter wave transceiver which converts the optical signals into millimeter waves and transmits the millimeter waves to a similar millimeter wave transceiver connected to remote unit 106. In yet another embodiment, transport mechanism 104 is a microwave radio transceiver. In still another embodiment, transport mechanism 104 is a T1 connection for transmission of IP data.

FIG. 3 is a schematic diagram of one embodiment of a remote unit 106 for use in a modular wireless communications platform. Remote unit 106 has a SeRF communicator 302, a SeRF interface 304, at least one DART interface 306. In this embodiment, DART modules 308, 309, 311, power amplified 310, duplexer/linear amplifier 312, and optical multiplex module 314 are all installed in remote unit 106 which is connected to antenna 108.

SeRF communicator 302 is designed and performs similar to SeRF communicator 202 of host unit 102. Likewise, DART modules 308, 309, 311 have the same features and design options as DART modules 208, 210, 212 of host unit 102. There is a slight difference from host unit 102, however, in the manner in which SeRF communicator 302 and DART modules 308, 309, 311 are connected. In this embodiment of remote unit 106, SeRF communicator 302 has a SeRF interface 304 which is used to link SeRF communicator to SeRF cables 305. SeRF cables 305 are used to allow DART modules 308, 309, 311 to be physically spaced from SeRF communicator 302 and from other DART modules. SeRF cables 305 connect to DART interface 306. DART modules 308 connected to DART interface 306 and communicate with SeRF communicator 302 through DART interface 306 over SeRF cables 305 and through SeRF interface 304. In another embodiment, SeRF interface 304, and SeRF cables 305 are eliminated and DART interface 306 is integrated into SeRF communicator 302.

DART modules 308 perform similar to DART module 208, except the ultimate destination/origination of the signals to/from DART modules 308 is antenna 108 and not base station 101 as in host unit 102. Optical multiplex module 314 also performs similarly to optical multiplex module 214 of host unit 102.

In the transmission direction, once a signal is converted to analog RF by DART module 308, the signal is sent through RF interface 322 (explained below) to power amplifier 310. Power amplifier 310 amplifies the RF signal received from DART module 308 for output through duplexer/linear amplifier 312 to antenna 108. Similar to DART modules 308, 309, 311, power amplifier 310 is designed for a certain frequency band and technology. Power amplifier 310 is, therefore, removable and is plugged into a power amplifier connector on remote unit 106 which is configured to receive power amplifier 310. Power amplifier connector is configured to couple power amplifier to duplexer/linear amplifier 312 and to DART module 308. Power amplifier 310 also has an alarm and control line that is connected to DART interface 306 for communication to SeRF communicator 302.

Once the signal is amplified by power amplifier 310, duplexer/linear amplifier 312 provides duplexing of the signal which is necessary to connect transmit and receive signals to a common antenna. Duplexer/linear amplifier 312 also provides low noise amplification of received signals and rms power detection of incident and reflected RF power in transmission signal. Similar to DART modules 308, 309, 311 and power amplifier 310, duplexer/linear amplifier 312 is frequency band and technology specific, and is removable. Duplexer/linear amplifier 312 plugs into a connector in remote unit 106 configured to receive duplexer/linear amplifier 312. Furthermore, the connector is configured to couple duplexer/linear amplifier 312 to power amplifier 310 and to antenna 108. Duplexer/linear amplifier 312 also has a control and alarm line that is connected to DART interface 320 for communication to SeRF communicator 302. In this embodiment, the frequency band and technology allow use of a single power amplifier 310 and duplexer/linear amplifier 318 by both DART module 308 and DART module 309. In this embodiment, a RF interface 322 is placed between power amplifier 310, duplexer/linear amplifier 312 and DART modules 308, 309. RF interface 322 provides RF splitting/combining of the RF transmit and receive signals necessary to allow connection of two DART modules 308, 309 to a single power amplifier 310 and duplexer/linear amplifier 312.

FIG. 4 shows a schematic view of one embodiment of a DART module 400 for use in either host unit 102 or remote unit 106. There are multiple embodiments of DART module 400 as described above, however, the common elements are described hereafter. DART module 400 has an edge connector 402 for connection to a DART interface. DART module 400 has two main signal paths; a transmission path 404 and a reception path 406. For signals received from a SeRF communicator, DART module 400 forms parallel digital RF data from the incoming SeRF stream, if needed, at FPGA 403. In this embodiment, FPGA 403 is a logic device that is programmed to convert serial digital data into RF sampled data and programmed to convert RF sampled data into serial digital data. DART module 400 then converts the digital signal to analog with digital to analog converter (DAC) 408. Transmission path 404 continues as DART module 400 filters, amplifies and up-converts the analog signal for RF transmission with an assortment of filters 410, amplifiers 412, an oscillator 414, and an attenuator 416. The transmission path exits DART module 400 at an SMA connector 420. The signals travel in the opposite direction down reception path 406, where they are converted from analog to digital and sent to a SeRF communicator. First signals are received at SMA connector 420. DART module 400 then amplifies, down-converts, filters the incoming RF signal with a plurality of filters 410, amplifiers 412, oscillators 414, and attenuators 416. DART module 400 then digitizes the signal with analog to digital converter 422. FPGA 403 then forms a SeRF stream and provides the SeRF stream as parallel digital RF sampled data to a SeRF communicator.

FIG. 5 illustrates a schematic view of one embodiment of a SeRF communicator 500 for use in either host unit 102 or remote unit 106. Serial radio frequency communicator 500 has a plurality of optical input/outputs 502, a clock 504, a field programmable gate array (FPGA) 506, a plurality of DART links 508, and a processor 510. In this embodiment, SeRF communicator 500 has eight (8) optical input/outputs 502. Optical input/outputs 502 connect to optical fiber which is used as a transport mechanism, or optical fiber that links SeRF communicator 500 to an optical multiplexer or a milli-

meter waver or microwave transceiver. Optical input/outputs **502** receiver high speed serial data transmission from another SeRF communicator. In addition, optical input/outputs **502** receive Open Base Station Architecture (OBSAI) protocol data from a baseband unit. In one embodiment, to aid in the ability of optical input/outputs **502** to receive multiple data formats, the signals received from optical input/outputs **502** are transmitted at the same frequency which is set to match the OBSAI protocol. Also, OBSAI data is stripped at the data link layer with a 8B/10B encoder to provide a good ones and zeros balance and remove approximately 20 percent of the OBSAID overhead. Finally, 16-bit filler words are used to provide a $^{24}/_{25}{}^{ths}$ transport ratio and match a 2.94 GBps transport speed to enable transport of OBSAI or SeRF data. The OBSAI protocol data is explained in more detail below with reference to FIG. **6**. Optical input/outputs **206**, also conform to the optical small form-factor pluggable multi-source agreement. Alternatively, any frequency of signal or shape of connector could be used as is known in the art. SeRF communicator **500** has eight (8) optical input/outputs and DART links **508** for 8 separate DART modules which transmit RF sampled data to/from DART modules.

In one embodiment, DART links **508** and corresponding connectors on a DART interface carry 6 slots of digitized RF payload for reading and writing DART FPGA registers from SeRF FGPA **506**. Each slot consists of 16 bits: 15 bits of digitized RF and 1 overhead bit used to transfer FPGA register data. The slots are framed in groups of 6 16-bit words, with each slot repeating at the sampling rate of 15.36M samples per second. A "superframe" of 32 frames encapsulates the data payload and provides synchronization. Thus, in this embodiment DART links **508** are 16-bit parallel data streams. In another embodiment, DART links **508** are serial. FPGA **506** has eight SERDES to serialize and de-serialize each data stream. Thus, there is one SERDES running for each DART link **508** and optical input/output **502**. In this embodiment, each SERDES runs at either half rate or full rate and 50% efficiency such that the SERDES offers 6 RF slots of data. In another embodiment, there are half as many SERDES as DART modules. Thus, the SERDES run at full rate, 100% efficiency and offer 12 RF slots of data.

In one direction, SeRF communicator **500** receives incoming SeRF streams over DART links **508** from DART modules, assembles data frames, and sends an outgoing optical serial data stream through optical input/outputs **502**. In the other direction, SeRF communicator **500** receives an optical serial data stream from another SeRF communicator at optical input/outputs **502**. SeRF communicator **500** then disassembles the frames of the serial data stream, and provides SeRF streams over DART links **508** to DART modules. SeRF communicator **500** also performs splitting and summing for digital simulcast, and provides a user interface for alarm, status, or configuration management. SeRF communicator **500** also provides bi-directional conversion to/from OBSAI protocol data received at optical input/outputs **502** from/to RF sampled data for DART modules. Additionally, SeRF communicator **500** has at least one RJ-45 connector **216** for receiving IP packets. In one embodiment, RJ-45 connector **216** supports Gigabit Ethernet.

Along with being configurable to communicate on different frequency band/sub-bands and with different technologies, host unit **102** and remote unit **106** are configurable to perform more or less of the wireless processing of the RF signal. Host unit **102** and remote unit **106** are configurable into three different functional configurations. The first configuration is illustrated in FIG. **1** and has host unit **101** and remote unit **106** functioning as a range extender for base station **101**. In this configuration, backhaul data is transmitted between host unit **102** and remote unit **106**. The second configuration is illustrated in FIG. **6**, and has fronthaul data transmitted between host unit **102** and remote unit **106**. In this configuration remote unit **106** performs the functionality of a base station. The third configuration is illustrated in FIG. **7** and has 'midhaul' data transmission between host unit **102** and remote unit **106**. In this embodiment, 'midhaul' data refers to OBSAI protocol data or similar partially processed wireless signals. Each of the three configurations will now be explained in further detail.

Referring back to FIG. **1**, system **100** shows one configuration for connection of host unit **102** and remote unit **106** in which remote unit **106** functions as a range extender. In this option, base station **103** contains all necessary components to convert IP packets received from an Internet gateway into an analog bit stream for transmission over antenna **108**. Except for needed amplification, the signal is ready for transmission over antenna **108** once sent by base station **103**. Host device **102** and remote device **106** do not perform any further processing on the data except what is required to send and receive the data over long range transmission. Host unit **102** contains the components as illustrated in FIG. **2** and receives the analog signal from base station **103** at the DART module matching the analog signal frequency band and technology. Host unit **102** converts the signal and transmits the data over transport mechanism **104**. Remote unit **106** contains the components as shown in FIG. **3**. Remote unit **106** receives the signal from transport mechanism **104** and sends the data to the DART module matching the frequency band and technology. The signal is then converted and transmitted over antenna **108** to mobile users.

FIG. **6** shows another configuration of a system **100** where base station functionality is performed at remote unit **106**. This configuration provides increased capacity to a network of antennas by allowing each remote unit **106** to function as a base station. In this embodiment of system **100**, IP data is not processed by a base station before sending to remote unit **106**. Instead IP data is received at host unit **102** directly from IP gateway **101**. IP data is received at an RJ-45 connector on SeRF communicator **202** of host unit **102**. In this configuration, therefore, the signal does not travel through DART module **208**, **210**, **212** of host unit **102**. The IP data is converted to a serial optical stream and transmitted over transport mechanism **104** to remote unit **106**. Remote unit **106** receives the IP data at SeRF communicator **302**.

Remote Unit **106**, in this embodiment, has a baseband unit **602** which is connected to a slot of DART interface **306**. In this configuration, baseband unit **602** is in fact a remote WiMax base station which replaces the functionality of base station **103** in the first configuration. SeRF communicator **302** converts the packetized optical data received into 25-75 Mbps data and sends the data over to baseband unit **602**. Baseband unit **602** performs baseband processing to put the IP data onto a channel. Baseband unit **602** also creates the protocol and modulation type for the channel. Baseband unit **602** then converts the data to match the OBSAI protocol. This OBSAI data is sent back into an optical input/output **502** of SeRF communicator **302**. SeRF communicator **302** uses software to convert the OBSAI protocol data into digital RF sampled data and sends the digital RF data to DART module **308** for transmission over antenna **108**. In another embodiment, baseband unit **602** converts IP data to/from common public radio interface (CPRI). Alternatively, any digital baseband protocol, including standard and proprietary protocols, or any software defined radio interface could be used by baseband unit **602** and SeRF communicator **302**.

FIG. **7** illustrates yet another configuration of a system **100** in which remote unit **106** performs the functionality of a base station, and the baseband processing is performed prior to transmission by host unit **102**. In this embodiment, IP data is received at a baseband unit **702** which converts the IP data into data conforming to the OBSAI protocol. Alternatively, any of the protocols listed with respect to FIG. **6** could be used. The OBSAI protocol data is sent to host unit **102** and OBSAI protocol data is transmitted over transport mechanism **104**. In another embodiment, the OBSAI conversion is done in SeRF **202** of host unit **102** before the serial data is transmitted to remote unit **106**. Here again, DART module **208** is not used at host unit **102**, since the data has not been converted to RF yet. The OBSAI protocol data is received by remote device **106** at SeRF communicator **302**. SeRF communicator **302** converts the OBSAI protocol data into digital RF sampled data and interfaces with DART **308**. DART **308** converts the data to analog RF and the signal is sent over antenna **108**.

Since host unit **102** and remote unit **106** have multiple input/outputs and can have multiple types of DART modules connected to each, host unit **102** and remote unit **106** are configured to multiplex different functional configurations through different input/outputs simultaneously. Thus, in one embodiment, a first input/output of host unit **102** and remote unit **106** function as a range extender for a base station. A second input/output of host unit **102** and remote unit **106** function to transmit 'midhaul' data. At the same time a third input/output of host unit **102** and remote unit **106** functions to transmit fronthaul data and remote unit **106** performs baseband processing upon the data.

The modular design of modular wireless communications protocol allows many different combinations of transport mechanisms, frequency bands, communication technologies, and processing functionality to operate simultaneously on the same host unit and remote unit.

Placing a base station at a remote wireless communication stations such as described with the configuration of FIG. **6** allows service providers to set up a distributed base station system. FIG. **8** illustrates one embodiment of a distributed base station system **800**. System **800** has a central node **801** having an IP gateway and a plurality of remote wireless communication stations **802**, **804**, **806**, **808**, **810**, **812**. Each remote station **802**, **804**, **806**, **808**, **810**, **812** includes a remote unit **814**, **816**, **818**, **820**, **822**, **824**, an antenna **826**, and a router **828**. In this embodiment, remote unit **818** and remote unit **820** are configured into a WiMax compatible base station. In another embodiment, all remote units **814**, **816**, **818**, **820**, **822**, **824** are configured into PCS cellular base stations. Alternatively, any number of remote units **814**, **816**, **818**, **820**, **822**, **824** could be configured into a base station for any of the technology or frequency bands described with respect to system **100**. Each remote station **802**, **804**, **806**, **808**, **810**, **812** functions similarly, except that they will vary based on the configuration of their respective remote unit **814**, **816**, **818**, **820**, **822**, **824**.

Distributed base station system **800** has many advantages over traditional centralized base station systems. For example, remote stations **806**, **806** which are equipped with a base station do not need to transmit signals back to central node **801** for base station processing. Instead, when an RF signal is received via antenna **826** at remote station **806**, for example, remote station **806** processes the RF signal with remote unit **818**, which is configured as a base station. Processing the RF signal forms a second RF signal which is then routed toward the destination of the RF signal. In this embodiment, the RF signal received at remote unit **806** is from a first mobile device which is in communication with a second mobile device which is the destination of the second RF signal. In another embodiment, the RF signal is received from a fixed internet user and the destination of the second RF signal is on the internet via IP gateway at central node **801**. In this embodiment, the second mobile device is within transmission range of remote station **812**. Thus, after processing by remote unit **818** at remote station **806**, routers **828** at remote stations **806**, **810**, **812** route the second RF signal through remote station **810** to remote station **812**. Thus, distributed base station system **800** simplifies and speeds up the processing of wireless signals.

In addition, there are many other advantages of a distributed base station system. For example, since each remote station **802**, **804**, **806**, **808**, **810**, **812** includes a router, a best path is found to the from the origination remote station to the destination remote station. This decreases the latency of communication transmission, and also reduces unnecessary network traffic. In addition, in one embodiment where each remote station **802**, **804**, **806**, **808**, **810**, **812** is equipped with a base station, each remote station **802**, **804**, **806**, **808**, **810**, **812** obtains dedicated capacity to the system. Dedicated capacity refers the allocation of an unvarying amount of bandwidth to each remote station **802**, **804**, **806**, **808**, **810**, **812**. For example, in one embodiment, each remote station **802**, **804**, **806**, **808**, **810**, **812** is allocated 25 Mbps of bandwidth. This is not possible in previous systems, because each remote station shares the capacity of a single central base station.

In one embodiment, remote stations **802**, **804**, **806**, **808**, **810**, **812** are set up in a ring configuration as shown in FIG. **8**. The ring structure is advantageous, because a ring configuration allows multiple paths to be found to each remote station **802**, **804**, **806**, **808**, **810**, **812**. Thus, there are more options for a best path to be found to each remote device **802**, **804**, **806**, **808**, **810**, **812**, and congested areas are more easily avoided. In another embodiment, shown in FIG. **9**, remote stations **902**, **904**, **906**, **908**, **910**, **912** are arranged into tree configurations. Tree configurations are advantageous, because they reduce the complexity of the network and the amount of communication links that must be established. Tree configurations, however, still provide reduced latencies by allowing signals to be routed through the local hubs (e.g. remote station **902** and **908**) and not requiring transmission to central hub **901**.

In yet another embodiment, a plurality of remote stations is set up in a daisy chain configuration. Alternatively, any combination of ring, tree, or daisy chain configurations could be used to network a plurality of remote stations.

Although specific embodiments have been illustrated and described herein, it will be appreciated by those of ordinary skill in the art that any arrangement, which is calculated to achieve the same purpose, may be substituted for the specific embodiment shown. This application is intended to cover any adaptations or variations of the present invention. Therefore, it is manifestly intended that this invention be limited only by the claims and the equivalents thereof.

What is claimed is:

1. A modular wireless communications platform comprising:

a modular host unit comprising:

a host serial radio frequency (SERF) communicator having a logic device programmed to convert reverse path serial digital data into reverse path host-side RF sampled data and programmed to convert forward path host-side RF sampled data into forward path serial digital data; and

a host interface coupled to the host SERF communicator, the host interface including a plurality of host digital to analog radio frequency transceiver (DART) connectors,

each host DART connector configured to connect with an edge connector of one of a plurality of host DART modules configured to transmit RF signals to a base station and receive RF signals from the base station, wherein the host SERF communicator is configured to send the reverse path host-side RF sampled data through at least one of the host DART connectors to at least one of the host DART modules, wherein the modular host unit is field configurable such that other host DART modules can be inserted into each host DART connector to enable operation with different frequency bands or communication technologies; and

a modular remote unit in communication with the modular host unit comprising:

a remote SERF communicator configured to convert the forward path serial digital data into forward path remote-side RF sampled data and configured to convert reverse path remote-side RF sampled data into the reverse path serial digital data; and

a remote interface coupled to the remote SERF communicator, the remote interface including a plurality of remote DART connectors, each remote DART connector configured to connect with an edge connector of one of a plurality of remote DART modules, wherein the remote SERF communicator is configured to send the forward path remote-side RF sampled data through at least one of the remote DART connectors to at least one of the remote DART modules, wherein the modular remote unit is field configurable such that other remote DART modules can be inserted into each remote DART connector to enable operation with different frequency bands or communication technologies.

2. The modular wireless communications platform of claim **1**, wherein the host SERF communicator of the modular host unit further comprises:

a plurality of host optical input/outputs, coupled to the logic device, configured to communicate the forward path serial digital data and the reverse path serial digital data; and

a plurality of host DART module links, coupled to the logic device, configured to communicate the forward path host-side RF sampled data and the reverse path host-side RF sampled data; and

wherein the remote SERF communicator of the modular remote unit comprises:

a plurality of remote optical input/outputs configured to communicate the forward path serial digital data and the reverse path serial digital data; and

a plurality of remote DART module links configured to communicate the forward path remote-side RF sampled data and the reverse path remote-side RF sampled data.

3. The modular wireless communications platform of claim **1**, wherein the modular remote unit further includes a removable baseband unit coupled to the remote SERF communicator, wherein the removable baseband unit is configured to perform baseband processing on IP data and place the IP data onto a channel for the remote SERF communicator.

4. A modular remote radio head comprising:

a serial radio frequency (SERF) communicator having a logic device programmed to convert forward path serial digital data from a host unit, which receives RF signals from a base station into forward path remote-side RF sampled data and programmed to convert reverse path remote-side RF sampled data into reverse path serial digital data;

at least one first connector configured to accept insertion of an edge connector of a digital to analog radio frequency transceiver (DART) module, wherein the DART module is programmed to convert the forward path remote-side RF sampled data to forward path analog RF data and is programmed to convert reverse path analog RF data to the reverse path remote-side RF sampled data, the at least one first connector configured to couple the transceiver DART module to the SERF communicator;

at least one second connector configured to couple to an amplifier and configured to couple the amplifier to the DART module;

at least one third connector configured to couple to a duplexer and configured to couple the duplexer to the amplifier; and

an antenna coupled to the duplexer.

5. The modular remote radio head of claim **4**, wherein the SERF communicator further comprises:

a plurality of optical input/outputs configured to communicate the forward path serial digital data and the reverse path serial digital data; and

a plurality of digital DART module links configured to communicate the forward path remote-side RF sampled data and the reverse path remote-side RF sampled data.

6. The modular remote radio head of claim **4**, wherein the frequency transceiver DART module is programmed to transmit the forward path analog RF data within a certain frequency band and is programmed to receive the reverse path analog RF data within the certain frequency band.

7. The modular remote radio head of claim **4**, wherein the frequency transceiver DART module is plugged into the at least one first connector.

8. The modular remote radio head of claim **4**, wherein the SERF communicator is configured to convert the forward path serial digital data into the forward path remote-side RF sampled data and to convert the reverse path remote-side RF sampled data into the reverse path serial digital data for multiple DART modules.

9. The modular remote radio head of claim **8**, wherein the multiple DART modules include different types of digital DART modules that communicate using different protocols or on different frequency bands.

10. The modular remote radio head of claim **4**, further comprising

an optical multiplexer connected to the SERF communicator, wherein the optical multiplexer is configured to multiplex optical signals to a host unit from the SERF communicator or from the host unit to the SERF communicator.

11. The modular remote radio head of claim **4**, further comprising

a removable baseband unit coupled to the SERF communicator, wherein the removable baseband unit is configured to perform baseband processing on IP data and place the IP data onto a channel for the SERF communicator.

12. A modular remote radio head for a wireless communication system comprising:

a serial radio frequency (SERF) communicator having a logic device programmed to convert forward path serial digital data from a host unit, which receives RF signals from a base station into forward path remote-side RF sampled data and programmed to convert reverse path remote-side RF sampled data into reverse path serial digital data; and

an interface having a plurality of connectors configured to connect to a plurality of edge connectors of a plurality of digital to analog radio frequency transceiver (DART) modules, wherein the DART modules are programmed

to convert the forward path remote-side RF sampled data into forward path analog RF data and are programmed to convert reverse path analog RF data into the reverse path remote-side RF sampled data, and wherein the interface is coupled to the SERF communicator and configured to allow transfer of the forward path remote-side RF sampled data from the SERF communicator to the plurality of digital DART modules when plugged into the plurality of connectors.

13. The modular remote radio head of claim **12**, wherein the DART modules are different types of DART modules, wherein each DART module of the different types of digital DART modules ere is configured to operate in a different respective frequency band or according to a different respective communication protocol.

14. The modular remote radio head of claim **12**, wherein the SERF communicator is configured to transmit the reverse path serial digital data and receive the forward path serial digital data as high speed optical signals.

15. The modular remote radio head of claim **12**, wherein the SERF communicator is configured to send the forward path remote-side RF sampled data to and receive the reverse path remote-side RF sampled data from the DART modules.

16. The modular remote radio head of claim **12**, wherein the SERF communicator is configured to send the forward path serial digital data and receive the reverse path serial digital data as backhaul data such that the modular remote radio head functions as a range extender.

17. The modular remote radio head of claim **12**, wherein the modular remote radio head further comprises a baseband unit, coupled to the SERF communicator, the baseband unit configured to process fronthaul data and cause the modular remote radio head to function as a remote base station.

18. The modular remote radio head of claim **12**, wherein the modular remote radio head is configured to convert between fronthaul data and the forward path remote-side RF sampled data for a first transceiver DART module and to convert between backhaul data and the reverse path remote-side RF sampled data for a second DART module.

19. A modular remote radio head for a wireless communication system comprising:

a serial radio frequency (SERF) communicator comprising:

at least one optical input/output configured to receive and send serial digital data from/to a host unit, the host unit configured to receive and send RF signals from/to a base station;

a plurality of digital to analog radio frequency transceiver (DART) module links configured to transport digital RF sampled data;

wherein the SERF communicator is configured to multiplex and demultiplex signals between the plurality of digital transceiver DART module links and the at least one optical input/output; and

an interface including a plurality of DART connectors coupled to respective ones of the plurality of DART module links of the SERF communicator, each of the DART connectors is connected to an edge connector of one of a plurality of digital to DART modules such that the modular remote radio head is field configurable and other DART modules can be inserted into each DART connector to enable operation with different frequency bands or communication technologies, wherein the frequency transceiver plurality of DART modules provide bi-directional conversion between analog RF data and the digital RF sampled data.

20. The modular remote radio head of claim **19**, wherein the SERF communicator further comprises at least one RJ-45 connector configured to send and receive IP packets from a host unit, wherein the serial SERF communicator is programmed to convert the IP packets to and from the digital RF sampled data for the plurality of digital transceiver DART modules.

* * * * *