US008346091B2

(12) **United States Patent**
Kummetz et al.

(10) **Patent No.: US 8,346,091 B2**
(45) **Date of Patent: Jan. 1, 2013**

(54) **DISTRIBUTED ANTENNA SYSTEM FOR WIRELESS NETWORK SYSTEMS**

(75) Inventors: **Thomas Kummetz**, Forest, VA (US); **Donald McAllister**, Lynchburg, VA (US); **Carmine Pagano**, Blairstown, NJ (US); **Hongju Yan**, Morganville, NJ (US); **Dennis M. Cleary**, Pittsford, NY (US); **Van Hanson**, Forest, VA (US); **Mathias Schmalisch**, Augsburg (DE); **Stefan Eisenwinter**, Buchdorf (DE)

(73) Assignee: **Andrew LLC**, Hickory, NC (US)

(*) Notice: Subject to any disclaimer, the term of this patent is extended or adjusted under 35 U.S.C. 154(b) by 843 days.

(21) Appl. No.: **12/431,872**

(22) Filed: **Apr. 29, 2009**

(65) **Prior Publication Data**

US 2010/0278530 A1 Nov. 4, 2010

(51) **Int. Cl.**

H04B 10/24	(2006.01)
H04B 10/02	(2006.01)
H04B 7/02	(2006.01)
H04J 14/02	(2006.01)
H04L 27/00	(2006.01)

(52) **U.S. Cl.** **398/115**; 398/41; 398/79; 398/116; 398/117; 370/276; 370/277

(58) **Field of Classification Search** 398/15–117; 455/3.01, 3.03–3.05, 403, 422.1–426.2
See application file for complete search history.

(56) **References Cited**

U.S. PATENT DOCUMENTS

5,621,786	A	4/1997	Fischer et al.	
5,627,879	A	5/1997	Russell et al.	
5,642,405	A	6/1997	Fischer et al.	
5,644,622	A	7/1997	Russell et al.	
5,657,374	A	8/1997	Russell et al.	
5,761,619	A	6/1998	Danne et al.	
5,809,422	A	9/1998	Raleigh et al.	
5,852,651	A	12/1998	Fischer et al.	
6,205,133	B1	3/2001	Bexten	
6,259,910	B1 *	7/2001	Fairfield et al.	455/422.1
6,704,545	B1	3/2004	Wala	
6,801,767	B1 *	10/2004	Schwartz et al.	455/426.2

(Continued)

FOREIGN PATENT DOCUMENTS

WO 03079645 A2 9/2003

(Continued)

OTHER PUBLICATIONS

Nine-page International Search Report and Written Opinion mailed Sep. 1, 2010 for Application No. PCT/US2010/028478.

Primary Examiner — Kenneth N Vanderpuye
Assistant Examiner — Tanya Ngo
(74) *Attorney, Agent, or Firm* — Kilpatrick Townsend & Stockton LLP

(57) **ABSTRACT**

A distributed antenna system is provided for communicating with a plurality of base stations. The distributed antenna system includes a system controller and a master unit communicating with at least one of the plurality of base stations. A remote unit communicates over a high data rate media with the master unit and/or a downstream remote unit. Alternatively, the distributed antenna system includes a controller and a digital time/space crosspoint switch controlled by the controller. A digitizing transceiver is in communication with the digital time/space crosspoint switch. The crosspoint switch is configured to transmit and receive digital data through the digitizing transceiver.

29 Claims, 20 Drawing Sheets

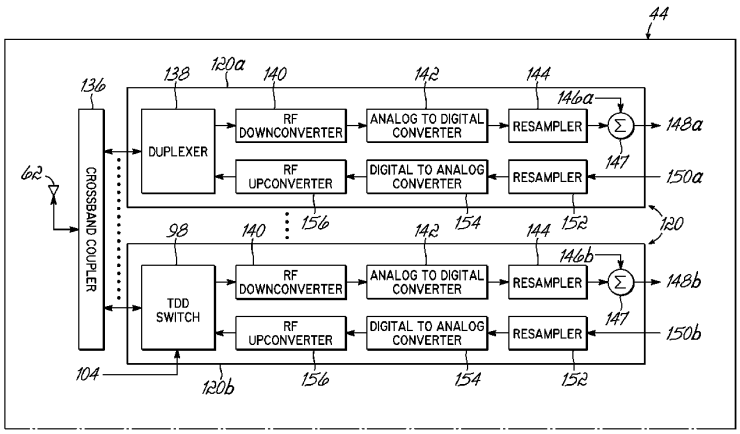

T-Mobile Ex. 1032

U.S. PATENT DOCUMENTS

6,937,878	B2	8/2005	Kim et al.	
6,963,552	B2	11/2005	Sabat, Jr. et al.	
7,035,671	B2	4/2006	Solum	
7,039,399	B2	5/2006	Fischer	
7,047,028	B2	5/2006	Cagenius	
7,075,903	B1	7/2006	Solum	
7,103,377	B2	9/2006	Bauman et al.	
7,171,244	B2	1/2007	Bauman	
7,184,728	B2	2/2007	Solum	
7,610,046	B2	10/2009	Wala	
7,630,296	B2	12/2009	Zavadsky et al.	
7,668,153	B2	2/2010	Zavadsky	
7,787,854	B2	8/2010	Conyers et al.	
7,805,073	B2 *	9/2010	Sabat et al.	398/5
7,974,244	B2	7/2011	Hermel	
8,175,459	B2 *	5/2012	Thelen et al.	398/115
2003/0007502	A1 *	1/2003	Dove et al.	370/463
2003/0185571	A1	10/2003	Lee et al.	
2004/0106435	A1	6/2004	Bauman et al.	
2004/0132474	A1	7/2004	Wala	
2004/0203339	A1 *	10/2004	Bauman	455/7
2004/0223539	A1 *	11/2004	Yang	375/148
2005/0123301	A1	6/2005	Kallstenius	
2005/0182760	A1 *	8/2005	Lee et al.	707/3
2007/0008939	A1 *	1/2007	Fischer	370/338
2007/0117592	A1 *	5/2007	Bauman	455/562.1
2007/0160012	A1	7/2007	Liu	
2007/0195905	A1	8/2007	Schatz	
2007/0264009	A1 *	11/2007	Sabat et al.	398/5
2007/0286599	A1	12/2007	Sauer et al.	
2008/0145061	A1	6/2008	Lee et al.	
2008/0181282	A1	7/2008	Wala et al.	
2008/0240225	A1	10/2008	Zavadsky et al.	
2008/0242232	A1 *	10/2008	Zavadsky et al.	455/67.11
2009/0075644	A1	3/2009	Hermel	
2009/0252205	A1 *	10/2009	Rheinfelder et al.	375/219
2010/0040372	A1 *	2/2010	Gejbrowitz et al.	398/71
2010/0178936	A1 *	7/2010	Wala et al.	455/456.2
2010/0266287	A1 *	10/2010	Adhikari et al.	398/116
2011/0045787	A1 *	2/2011	Jin et al.	455/114.3

FOREIGN PATENT DOCUMENTS

WO	2004051322	A2	6/2004
WO	WO2004051873		6/2004
WO	2005011151	A1	2/2005
WO	2005034544	A1	4/2005
WO	2005099282	A1	10/2005
WO	2006136811	A1	12/2006

* cited by examiner

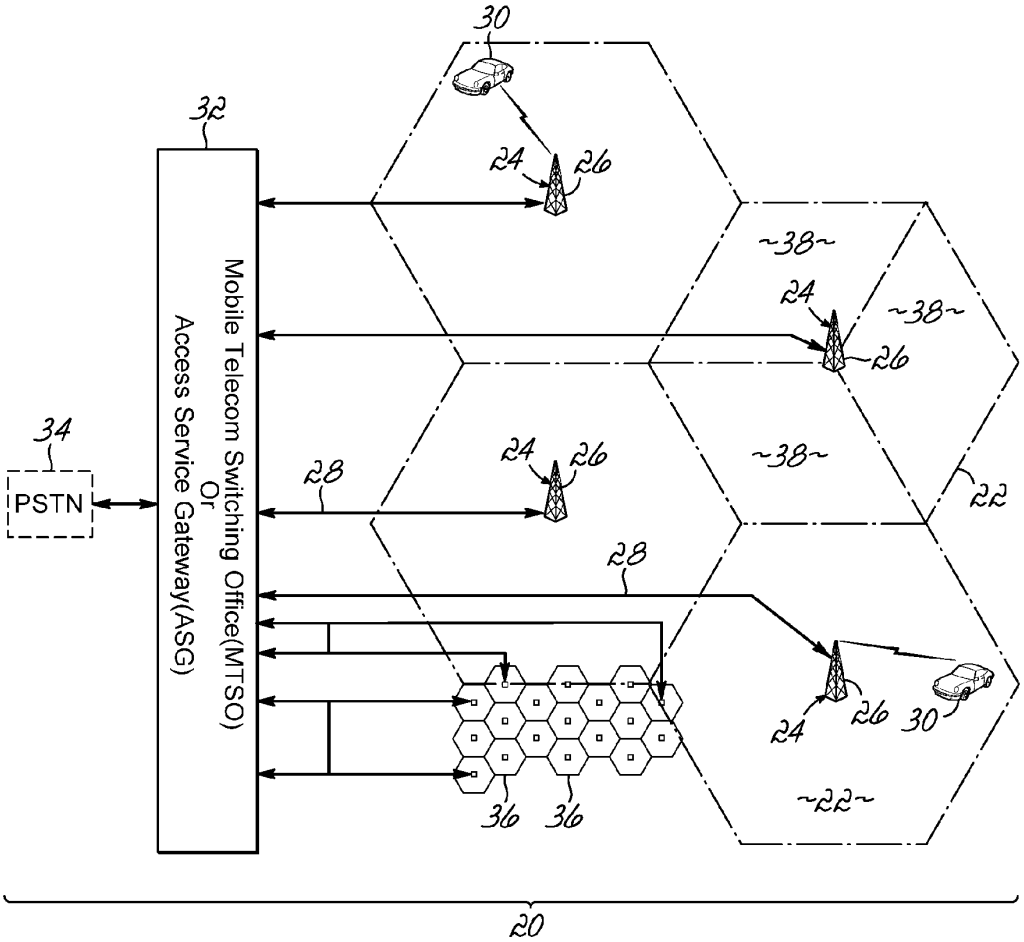
Mobile Telecom Switching Office(MTSO)
Or
Access Service Gateway(ASG)
PSTN
34
32
30
24
26
28
36
38
22
20

FIG. 1

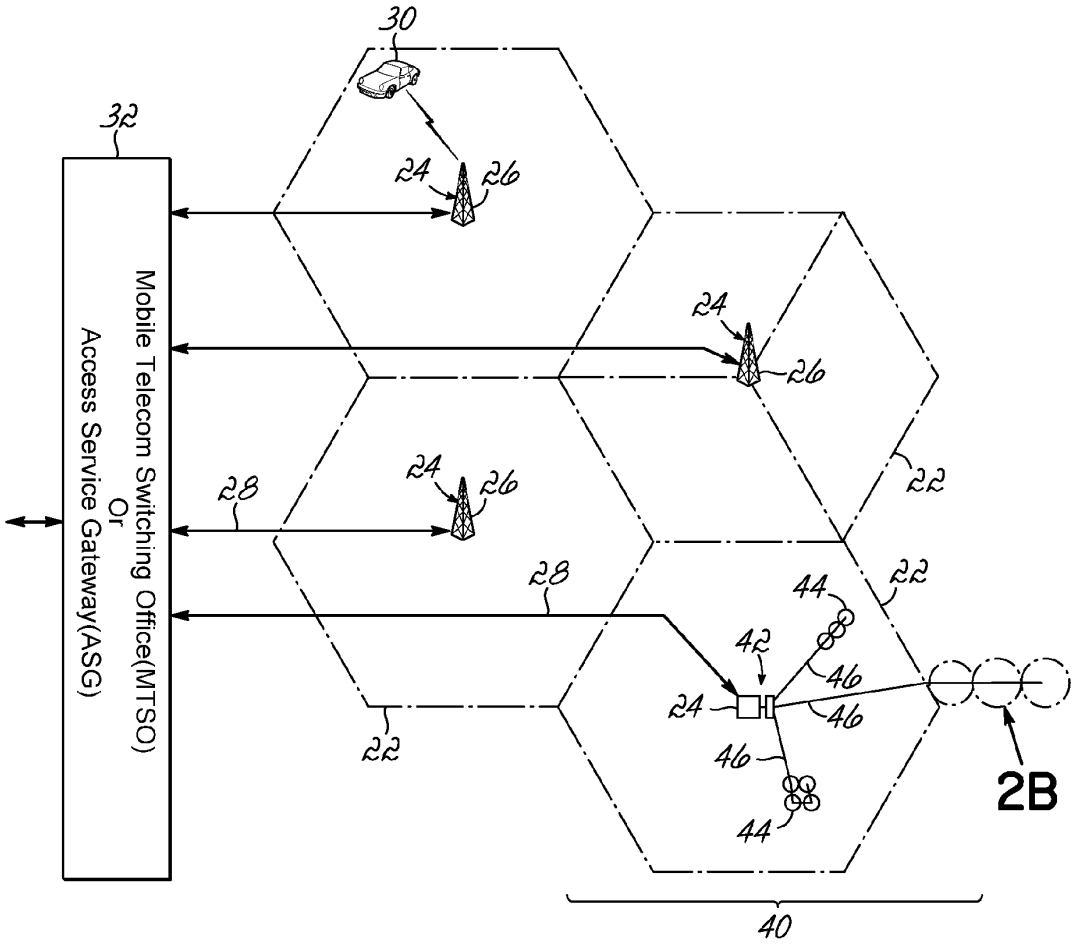
30
32
24
26
Mobile Telecom Switching Office(MTSO)
Or
Access Service Gateway(ASG)
28
22
44
42
46
2B
40

FIG. 2A

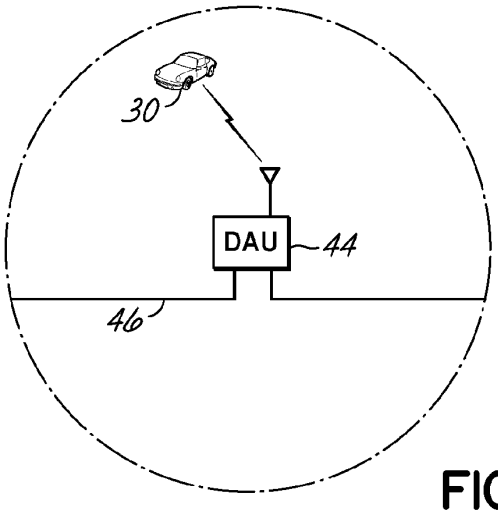
30
DAU
44
46

FIG. 2B

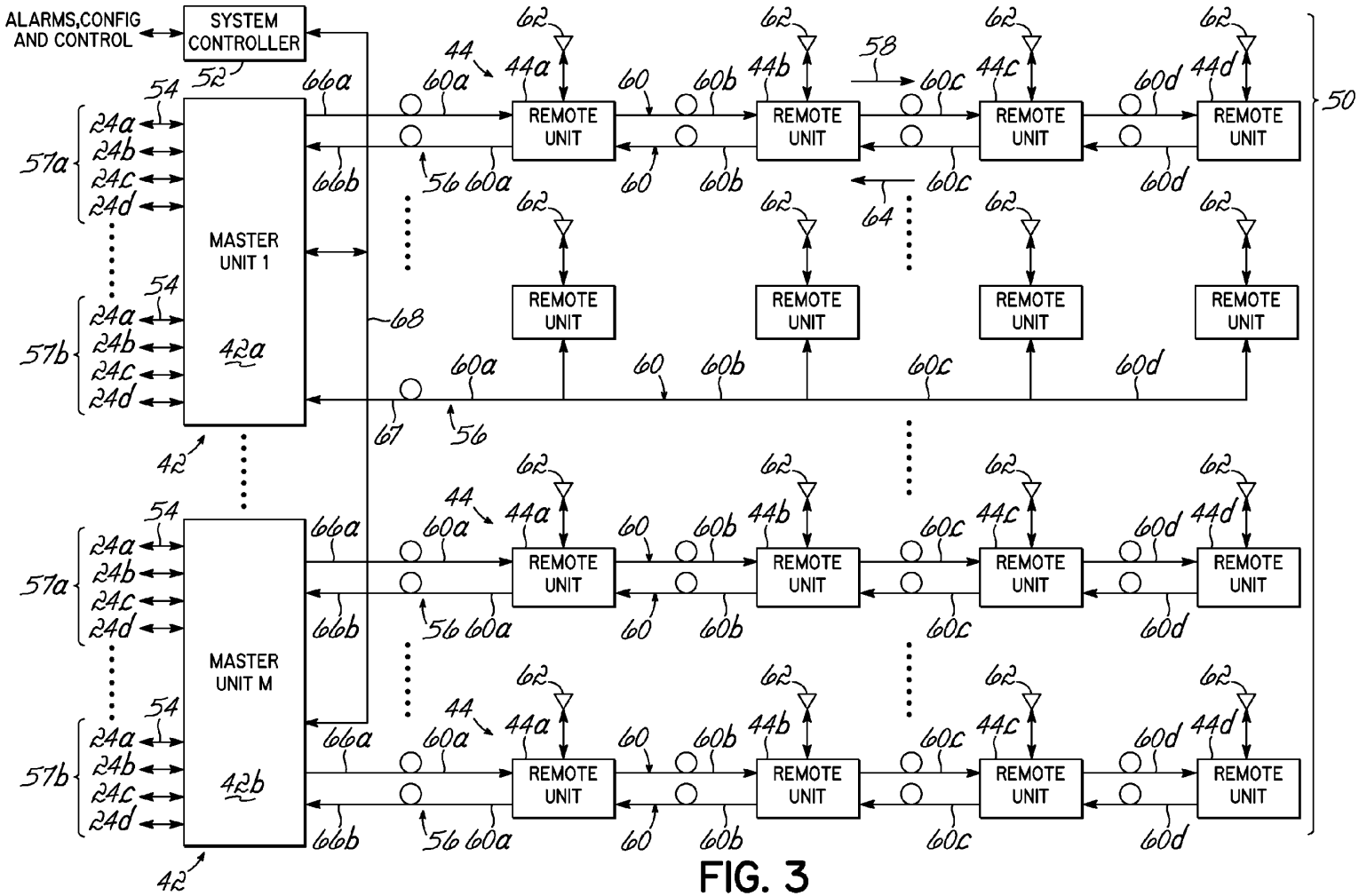
ALARMS,CONFIG AND CONTROL
SYSTEM CONTROLLER
52
MASTER UNIT 1
42a
MASTER UNIT M
42b
42
REMOTE UNIT
24a
24b
24c
24d
54
57a
57b
44
44a
44b
44c
44d
60
60a
60b
60c
60d
62
64
66a
66b
67
68
56
58
50

FIG. 3

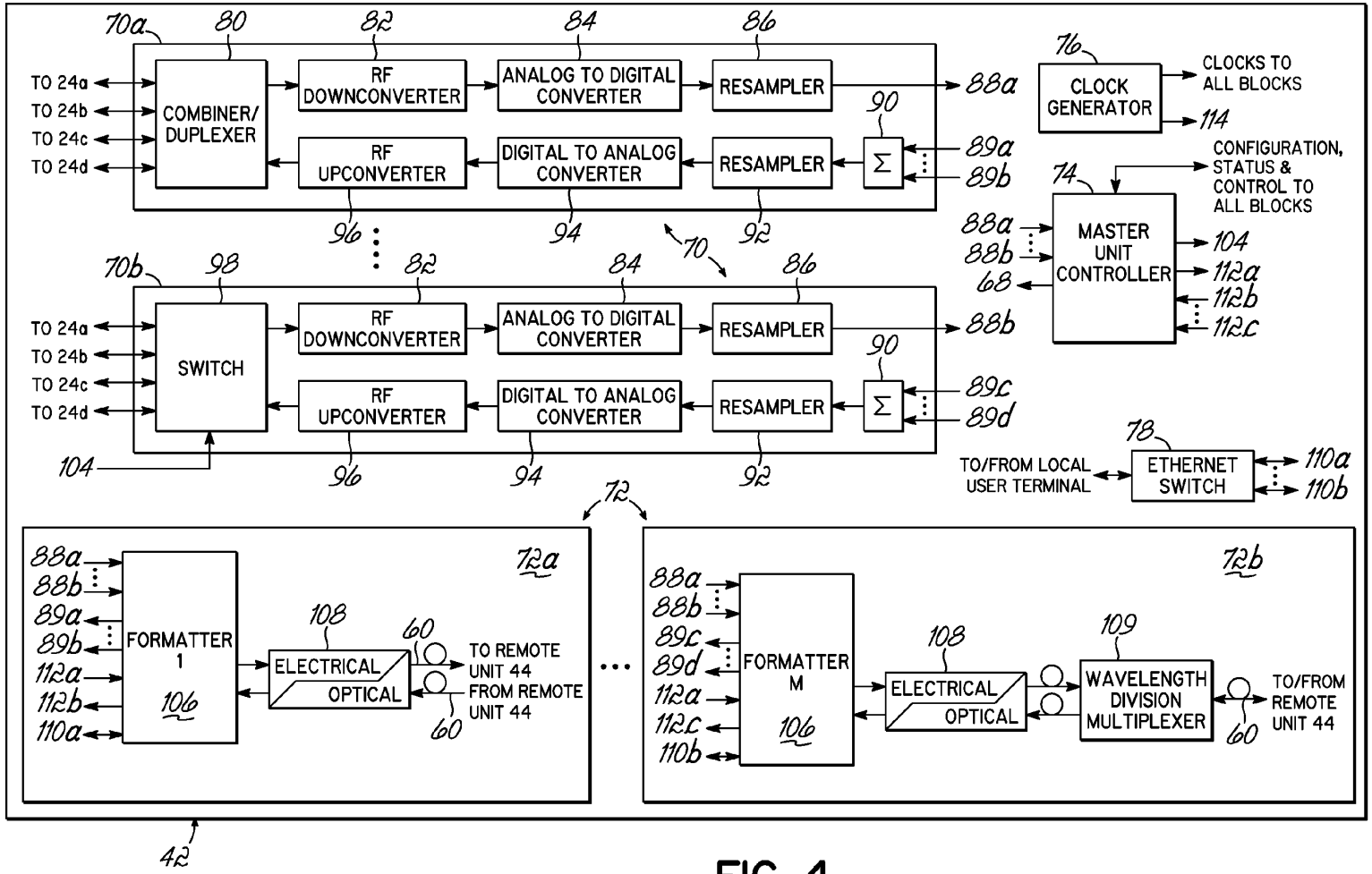
70a
80
82
84
86
TO 24a
TO 24b
TO 24c
TO 24d
COMBINER/ DUPLEXER
RF DOWNCONVERTER
ANALOG TO DIGITAL CONVERTER
RESAMPLER
88a
90
89a
89b
RF UPCONVERTER
DIGITAL TO ANALOG CONVERTER
RESAMPLER
Σ
96
94
92
70
70b
98
82
84
86
SWITCH
RF DOWNCONVERTER
ANALOG TO DIGITAL CONVERTER
RESAMPLER
88b
90
89c
89d
RF UPCONVERTER
DIGITAL TO ANALOG CONVERTER
RESAMPLER
Σ
104
96
94
92
76
CLOCK GENERATOR
CLOCKS TO ALL BLOCKS
114
CONFIGURATION, STATUS & CONTROL TO ALL BLOCKS
74
MASTER UNIT CONTROLLER
88a
88b
68
104
112a
112b
112c
78
TO/FROM LOCAL USER TERMINAL
ETHERNET SWITCH
110a
110b
72
72a
88a
88b
89a
89b
112a
112b
110a
FORMATTER 1
106
108
ELECTRICAL
OPTICAL
60
TO REMOTE UNIT 44
FROM REMOTE UNIT 44
60
72b
88a
88b
89c
89d
112a
112c
110b
FORMATTER M
106
108
ELECTRICAL
OPTICAL
109
WAVELENGTH DIVISION MULTIPLEXER
60
TO/FROM REMOTE UNIT 44
42

FIG. 4

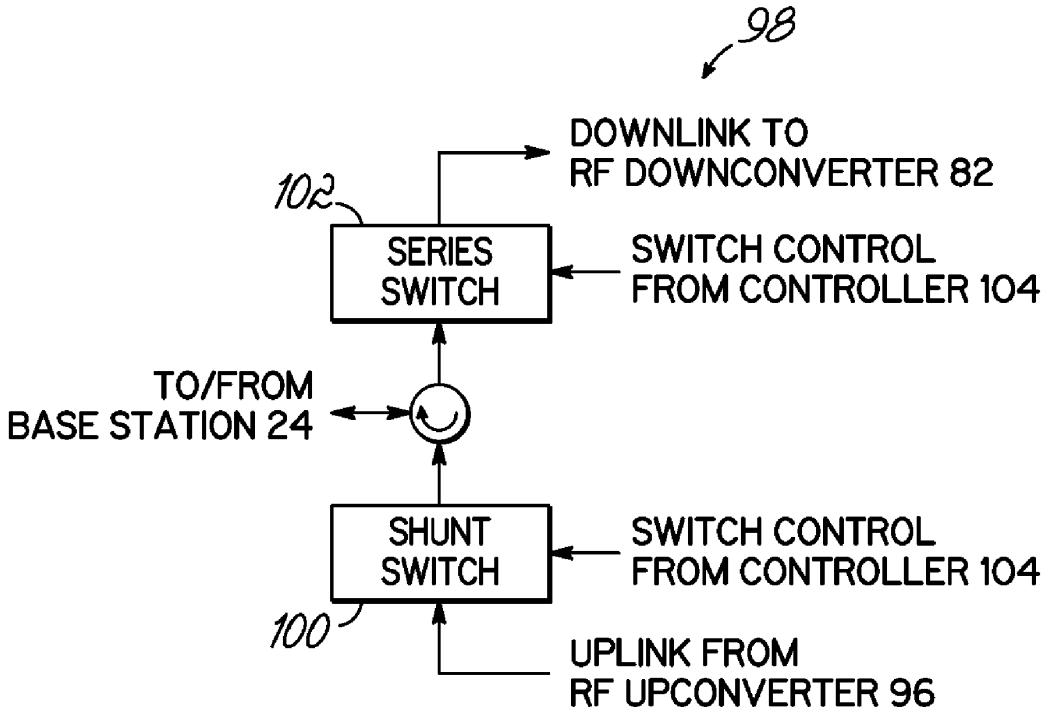
98
DOWNLINK TO
RF DOWNCONVERTER 82
102
SERIES
SWITCH
SWITCH CONTROL
FROM CONTROLLER 104
TO/FROM
BASE STATION 24
SHUNT
SWITCH
SWITCH CONTROL
FROM CONTROLLER 104
100
UPLINK FROM
RF UPCONVERTER 96

FIG. 5

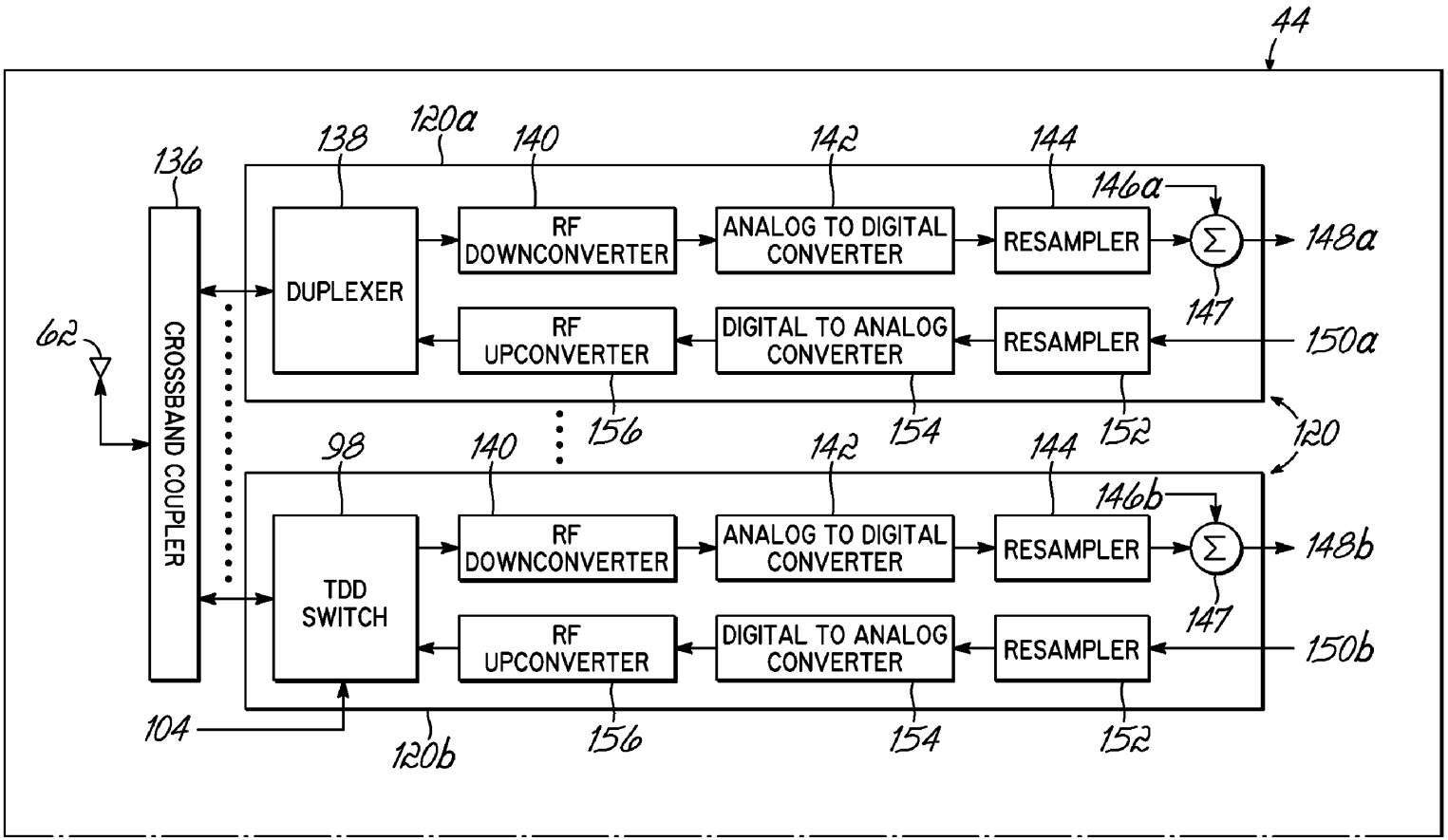
44
136
138
120a
140
142
144
146a
CROSSBAND COUPLER
DUPLEXER
RF DOWNCONVERTER
ANALOG TO DIGITAL CONVERTER
RESAMPLER
148a
147
62
RF UPCONVERTER
DIGITAL TO ANALOG CONVERTER
RESAMPLER
150a
156
154
152
120
98
140
142
144
146b
TDD SWITCH
RF DOWNCONVERTER
ANALOG TO DIGITAL CONVERTER
RESAMPLER
148b
147
RF UPCONVERTER
DIGITAL TO ANALOG CONVERTER
RESAMPLER
150b
104
120b
156
154
152

FIG. 6A

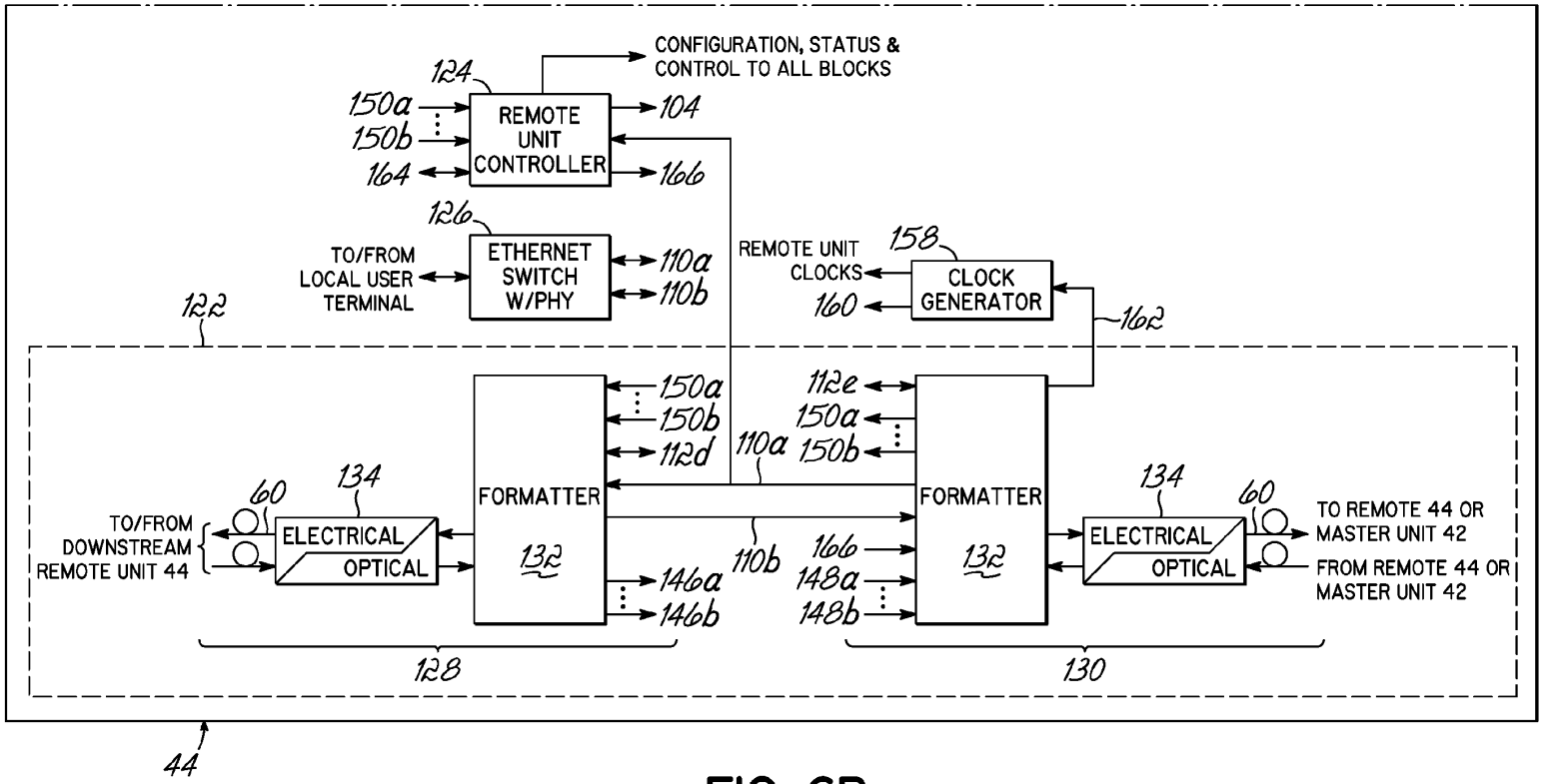
CONFIGURATION, STATUS & CONTROL TO ALL BLOCKS
124
150a
150b
164
REMOTE UNIT CONTROLLER
104
166
126
TO/FROM LOCAL USER TERMINAL
ETHERNET SWITCH W/PHY
110a
110b
REMOTE UNIT CLOCKS
158
160
CLOCK GENERATOR
162
122
150a
150b
112d
110a
112e
150a
150b
60
134
TO/FROM DOWNSTREAM REMOTE UNIT 44
ELECTRICAL
OPTICAL
FORMATTER
132
110b
146a
146b
166
148a
148b
FORMATTER
132
134
60
ELECTRICAL
OPTICAL
TO REMOTE 44 OR MASTER UNIT 42
FROM REMOTE 44 OR MASTER UNIT 42
128
130
44

FIG. 6B

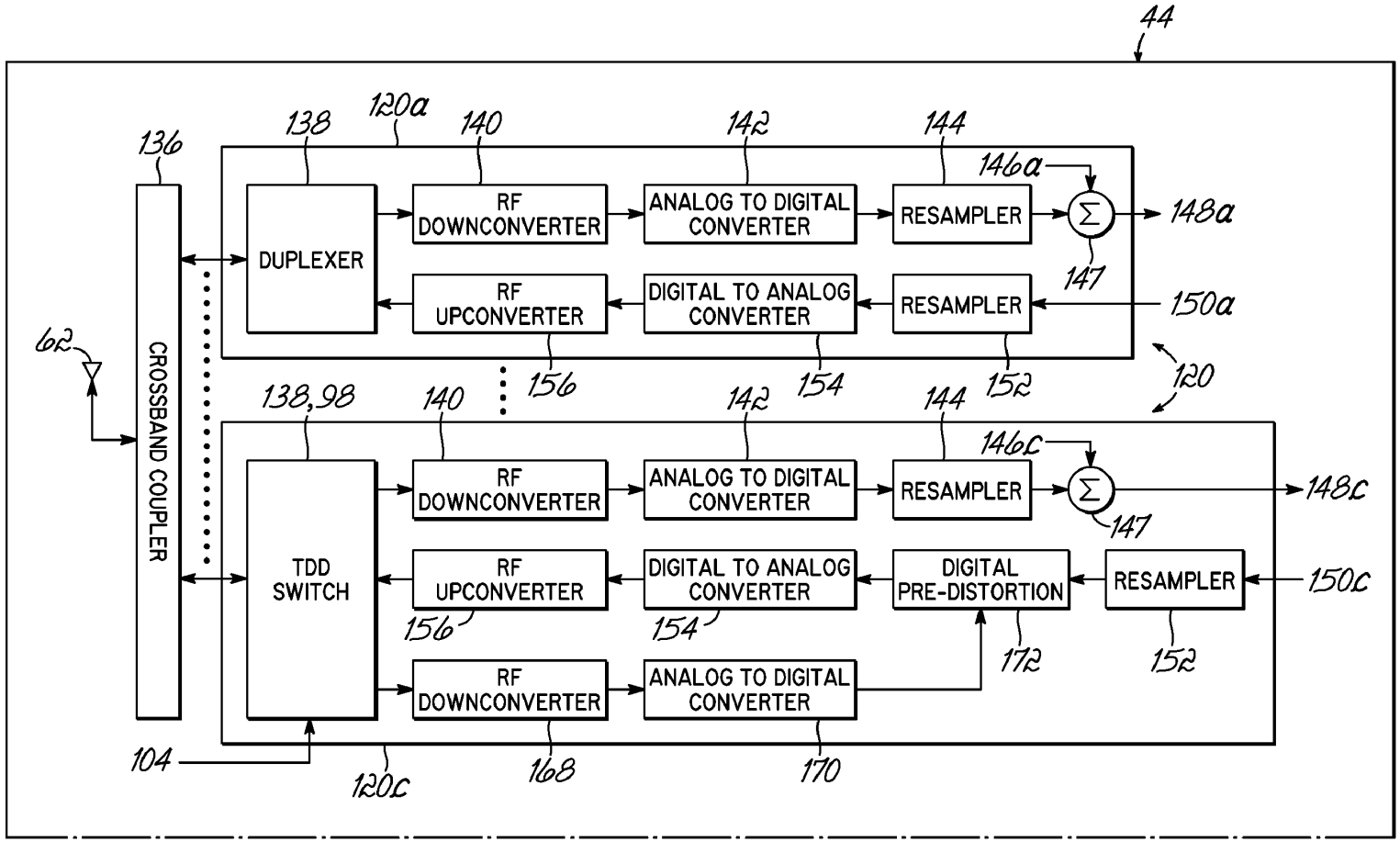
44
136
CROSSBAND COUPLER
62
138
120a
140
142
144
146a
DUPLEXER
RF DOWNCONVERTER
ANALOG TO DIGITAL CONVERTER
RESAMPLER
Σ
148a
147
RF UPCONVERTER
DIGITAL TO ANALOG CONVERTER
RESAMPLER
150a
156
154
152
120
138,98
140
142
144
146c
TDD SWITCH
RF DOWNCONVERTER
ANALOG TO DIGITAL CONVERTER
RESAMPLER
Σ
148c
147
RF UPCONVERTER
DIGITAL TO ANALOG CONVERTER
DIGITAL PRE-DISTORTION
RESAMPLER
150c
156
154
172
152
RF DOWNCONVERTER
ANALOG TO DIGITAL CONVERTER
104
120c
168
170

FIG. 7A

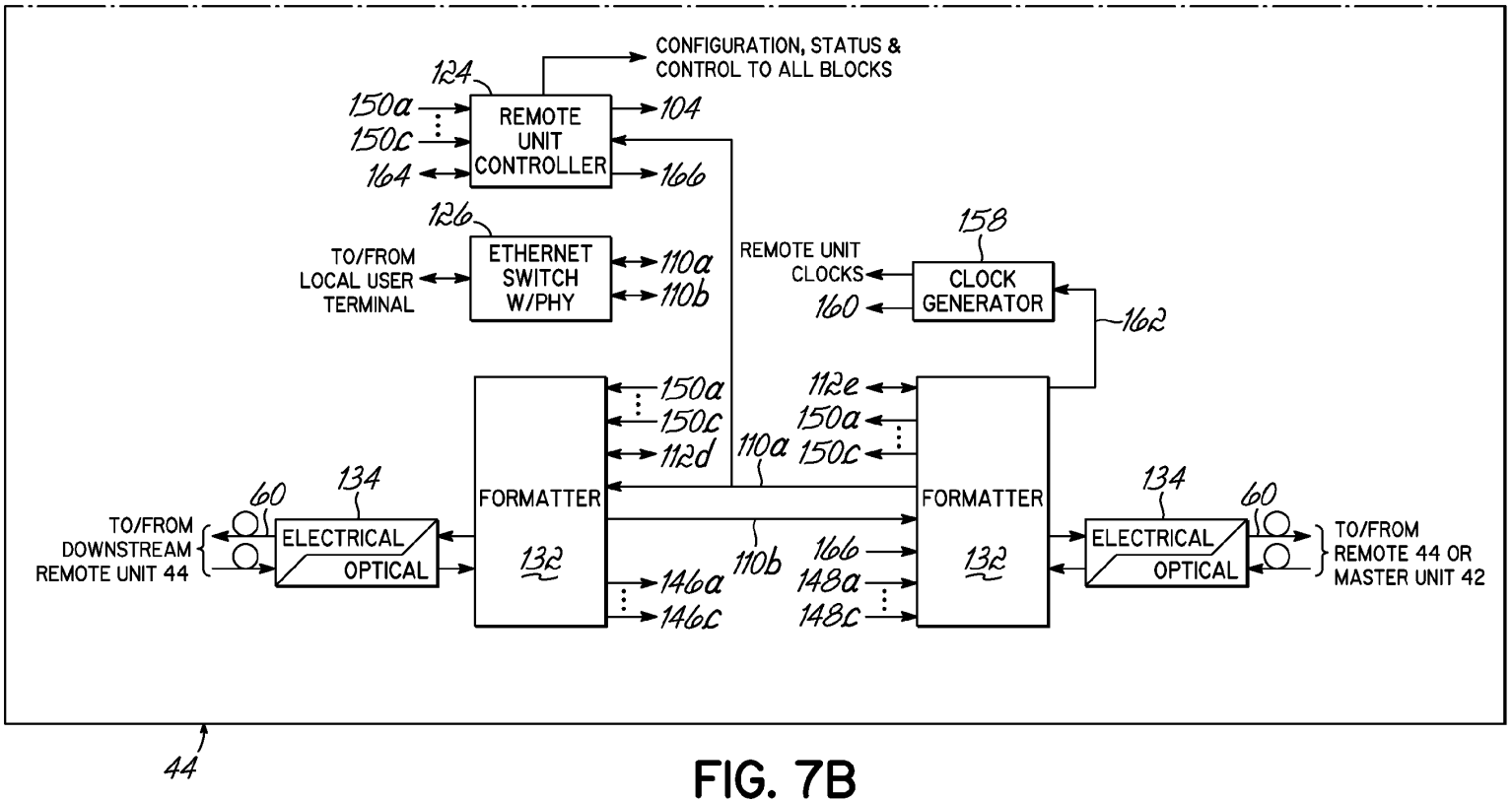
CONFIGURATION, STATUS & CONTROL TO ALL BLOCKS
124
150a
150c
164
REMOTE UNIT CONTROLLER
104
166
126
TO/FROM LOCAL USER TERMINAL
ETHERNET SWITCH W/PHY
110a
110b
REMOTE UNIT CLOCKS
160
158
CLOCK GENERATOR
162
150a
150c
112d
110a
112e
150a
150c
FORMATTER
132
FORMATTER
132
110b
166
148a
148c
146a
146c
60
134
TO/FROM DOWNSTREAM REMOTE UNIT 44
ELECTRICAL
OPTICAL
134
60
ELECTRICAL
OPTICAL
TO/FROM REMOTE 44 OR MASTER UNIT 42
44

FIG. 7B

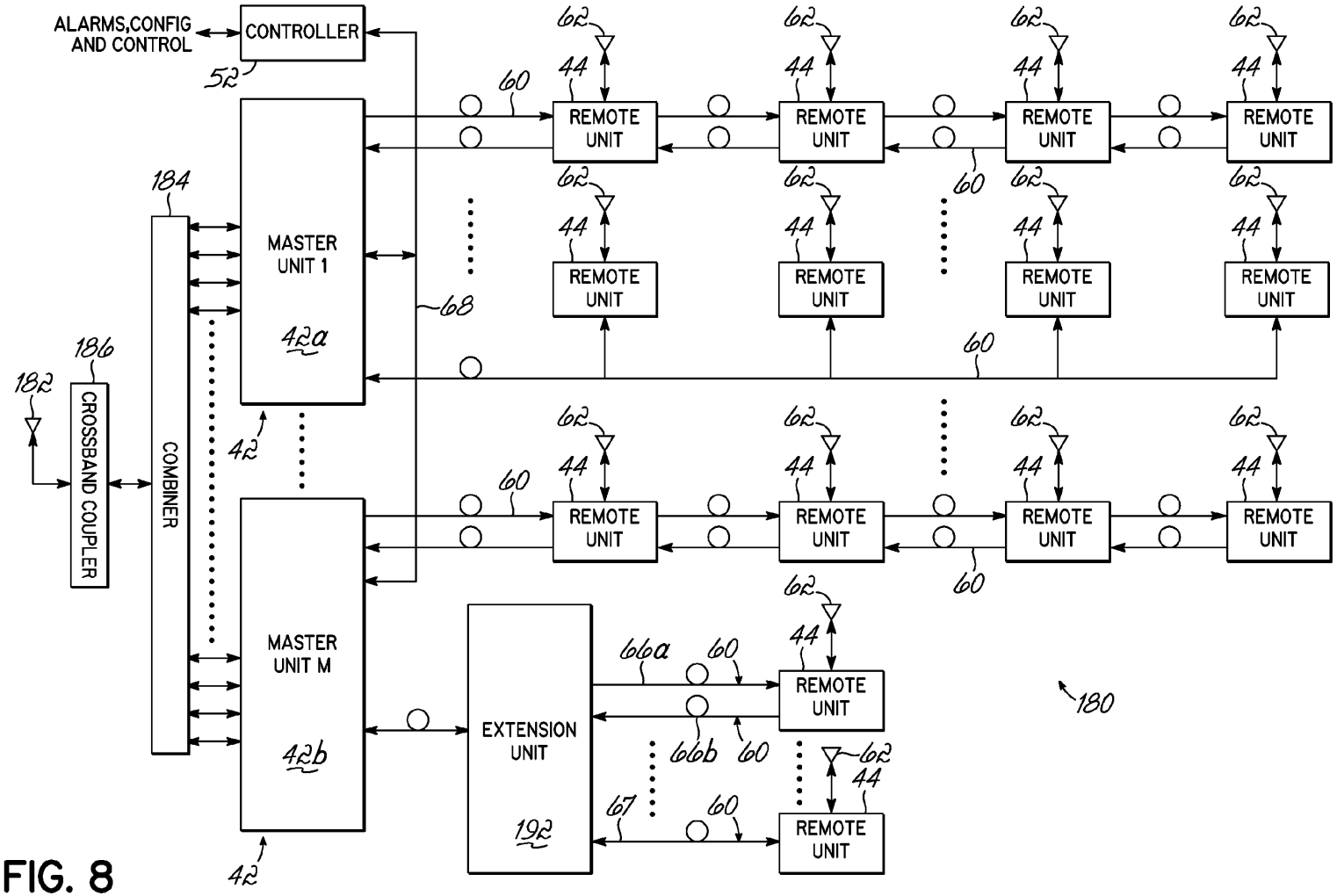
ALARMS,CONFIG AND CONTROL
CONTROLLER
52
184
186
182
CROSSBAND COUPLER
COMBINER
MASTER UNIT 1
42a
42
MASTER UNIT M
42b
42
68
60
62
44
REMOTE UNIT
EXTENSION UNIT
192
66a
66b
67
180

FIG. 8

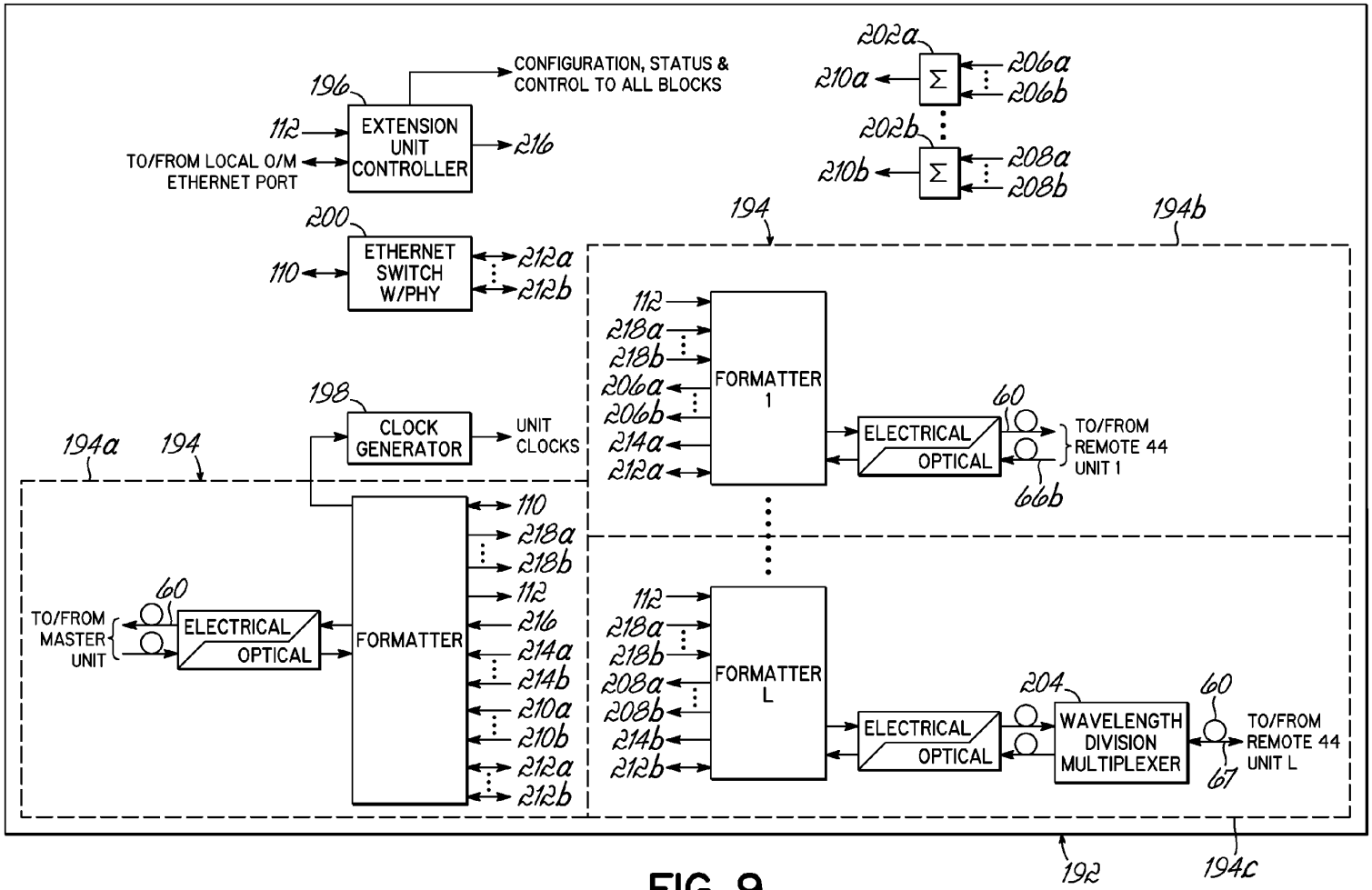
CONFIGURATION, STATUS & CONTROL TO ALL BLOCKS
196
112
EXTENSION UNIT CONTROLLER
216
TO/FROM LOCAL O/M ETHERNET PORT
200
110
ETHERNET SWITCH W/PHY
212a
212b
198
CLOCK GENERATOR
UNIT CLOCKS
194a
194
TO/FROM MASTER UNIT
60
ELECTRICAL
OPTICAL
FORMATTER
110
218a
218b
112
216
214a
214b
210a
210b
212a
212b
202a
210a
206a
206b
202b
210b
208a
208b
194
194b
FORMATTER 1
ELECTRICAL
OPTICAL
TO/FROM REMOTE 44 UNIT 1
66b
FORMATTER L
204
WAVELENGTH DIVISION MULTIPLEXER
TO/FROM REMOTE 44 UNIT L
67
192
194c

FIG. 9

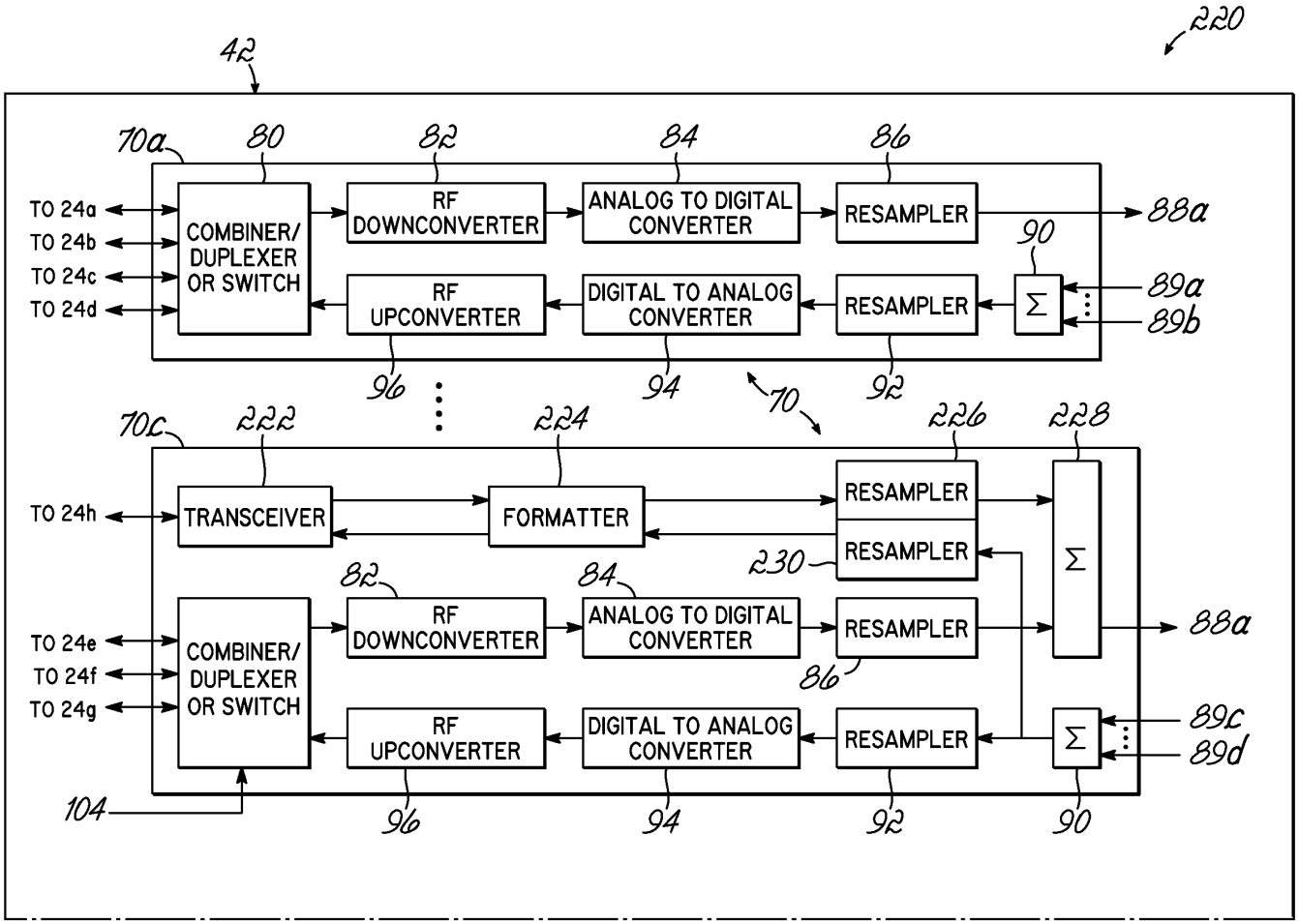
220
42
70a
80
82
84
86
TO 24a
TO 24b
TO 24c
TO 24d
COMBINER/ DUPLEXER OR SWITCH
RF DOWNCONVERTER
ANALOG TO DIGITAL CONVERTER
RESAMPLER
88a
90
89a
89b
RF UPCONVERTER
DIGITAL TO ANALOG CONVERTER
RESAMPLER
Σ
96
94
92
70
70c
222
224
226
228
TO 24h
TRANSCEIVER
FORMATTER
RESAMPLER
RESAMPLER
230
Σ
82
84
TO 24e
TO 24f
TO 24g
COMBINER/ DUPLEXER OR SWITCH
RF DOWNCONVERTER
ANALOG TO DIGITAL CONVERTER
RESAMPLER
86
88a
89c
89d
RF UPCONVERTER
DIGITAL TO ANALOG CONVERTER
RESAMPLER
Σ
104
96
94
92
90

FIG. 10A

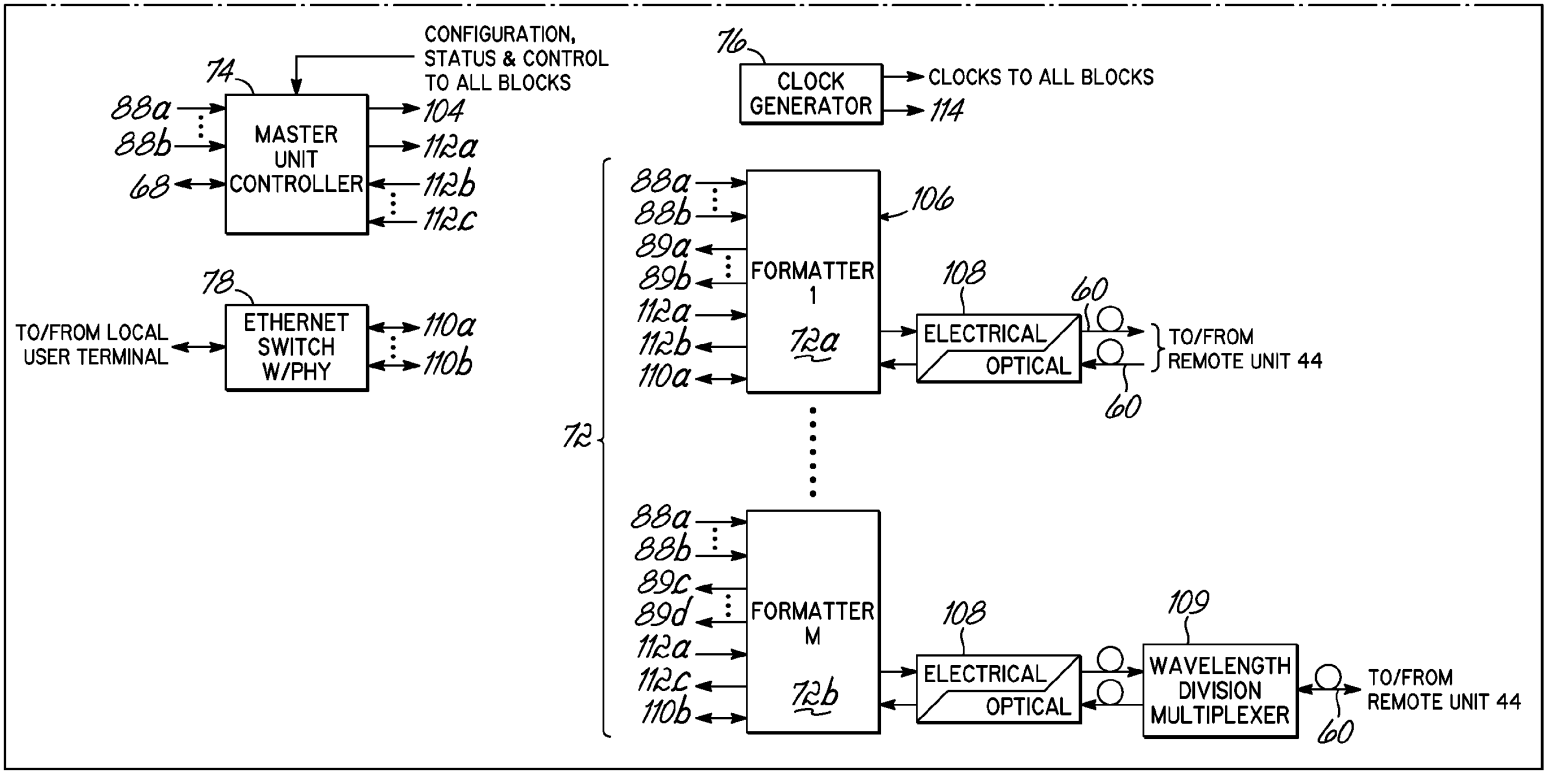
CONFIGURATION, STATUS & CONTROL TO ALL BLOCKS
74
MASTER UNIT CONTROLLER
88a
88b
68
104
112a
112b
112c
78
ETHERNET SWITCH W/PHY
TO/FROM LOCAL USER TERMINAL
110a
110b
76
CLOCK GENERATOR
CLOCKS TO ALL BLOCKS
114
72
FORMATTER 1
72a
106
89a
89b
112a
112b
110a
108
ELECTRICAL
OPTICAL
60
TO/FROM REMOTE UNIT 44
FORMATTER M
72b
89c
89d
112c
110b
109
WAVELENGTH DIVISION MULTIPLEXER
TO/FROM REMOTE UNIT 44

FIG. 10B

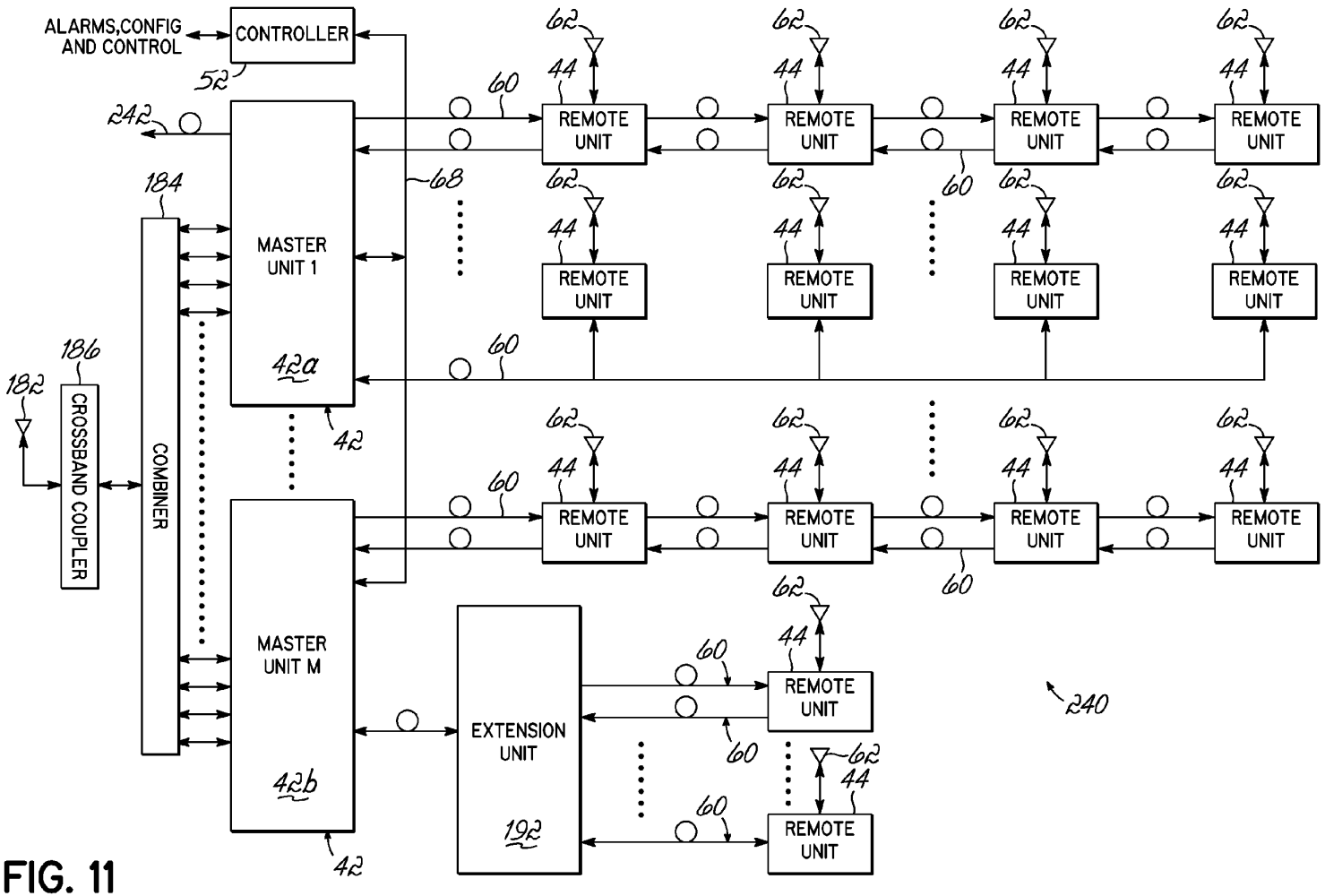
ALARMS,CONFIG AND CONTROL
CONTROLLER
52
242
184
186
182
CROSSBAND COUPLER
COMBINER
MASTER UNIT 1
42a
42
MASTER UNIT M
42b
42
68
60
62
44
REMOTE UNIT
EXTENSION UNIT
192
240

FIG. 11

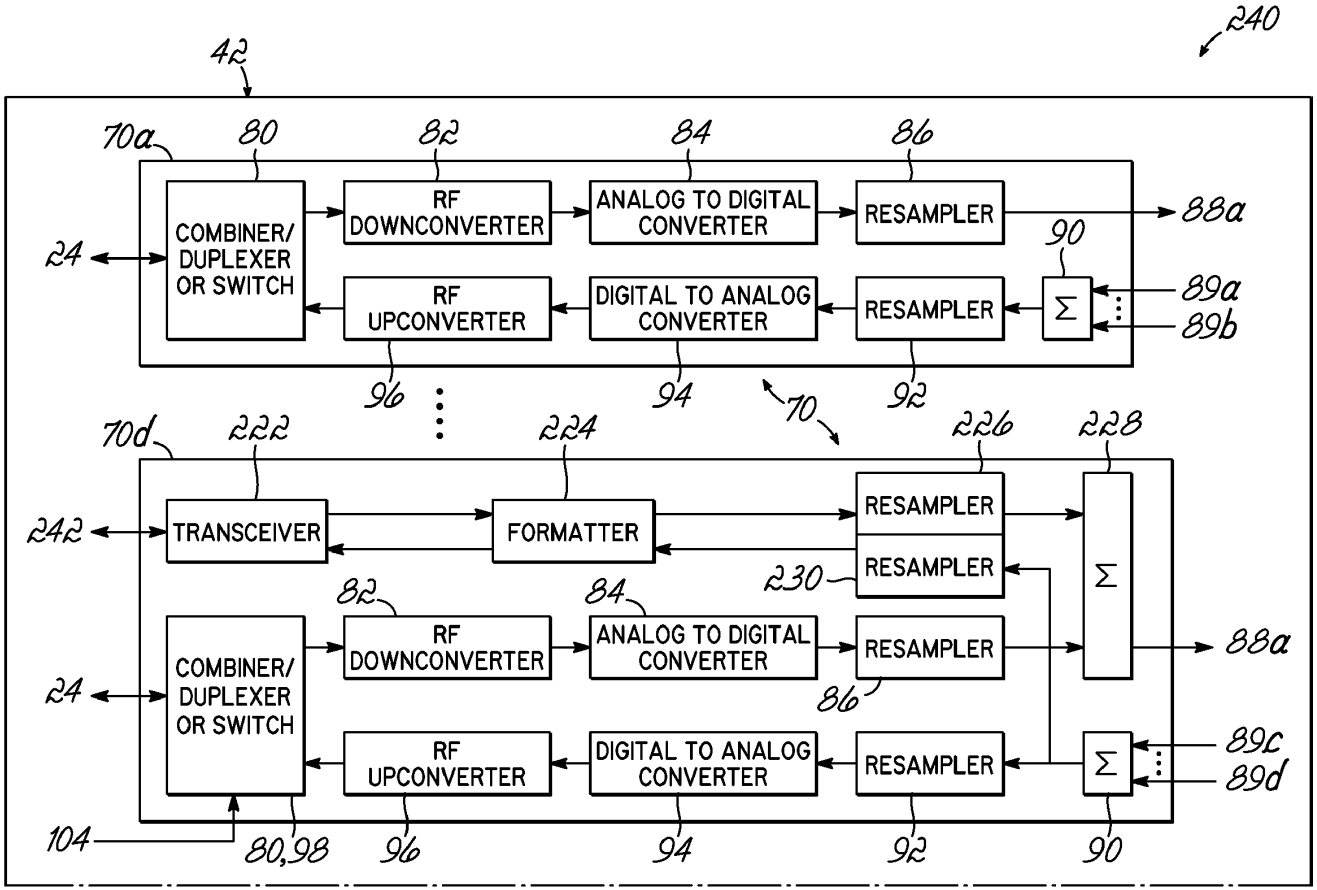
240
42
70a
80
82
84
86
COMBINER/ DUPLEXER OR SWITCH
RF DOWNCONVERTER
ANALOG TO DIGITAL CONVERTER
RESAMPLER
88a
24
90
RF UPCONVERTER
DIGITAL TO ANALOG CONVERTER
RESAMPLER
Σ
89a
89b
96
94
70
92
70d
222
224
226
228
242
TRANSCEIVER
FORMATTER
RESAMPLER
RESAMPLER
230
82
84
RF DOWNCONVERTER
ANALOG TO DIGITAL CONVERTER
RESAMPLER
88a
24
COMBINER/ DUPLEXER OR SWITCH
86
RF UPCONVERTER
DIGITAL TO ANALOG CONVERTER
RESAMPLER
Σ
89c
89d
104
80,98
96
94
92
90

FIG. 12A

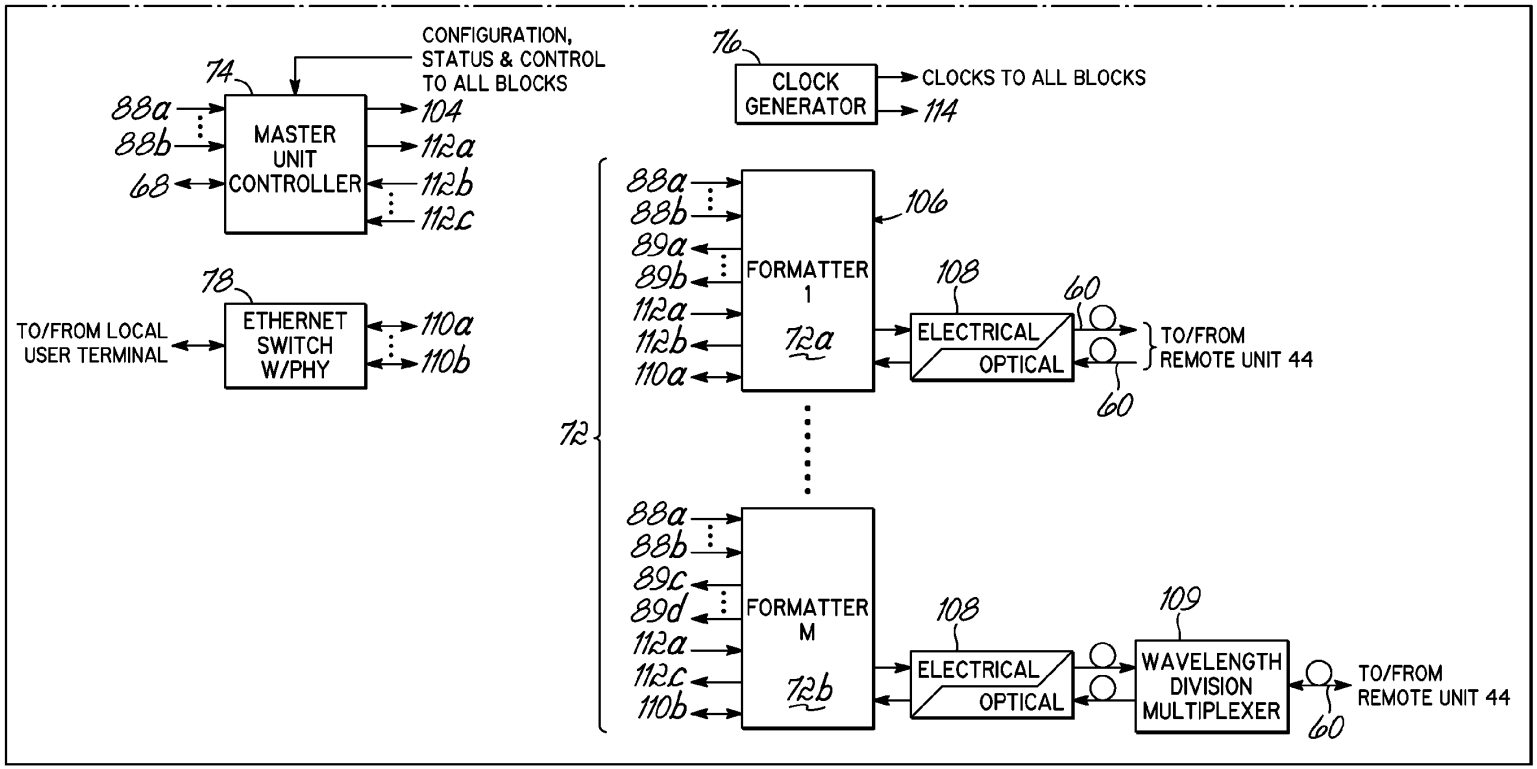
CONFIGURATION, STATUS & CONTROL TO ALL BLOCKS
74
MASTER UNIT CONTROLLER
88a
88b
68
104
112a
112b
112c
76
CLOCK GENERATOR
CLOCKS TO ALL BLOCKS
114
78
ETHERNET SWITCH W/PHY
TO/FROM LOCAL USER TERMINAL
110a
110b
72
FORMATTER 1
72a
106
89a
89b
112a
112b
110a
108
ELECTRICAL
OPTICAL
60
TO/FROM REMOTE UNIT 44
FORMATTER M
72b
89c
89d
112c
110b
109
WAVELENGTH DIVISION MULTIPLEXER

FIG. 12B

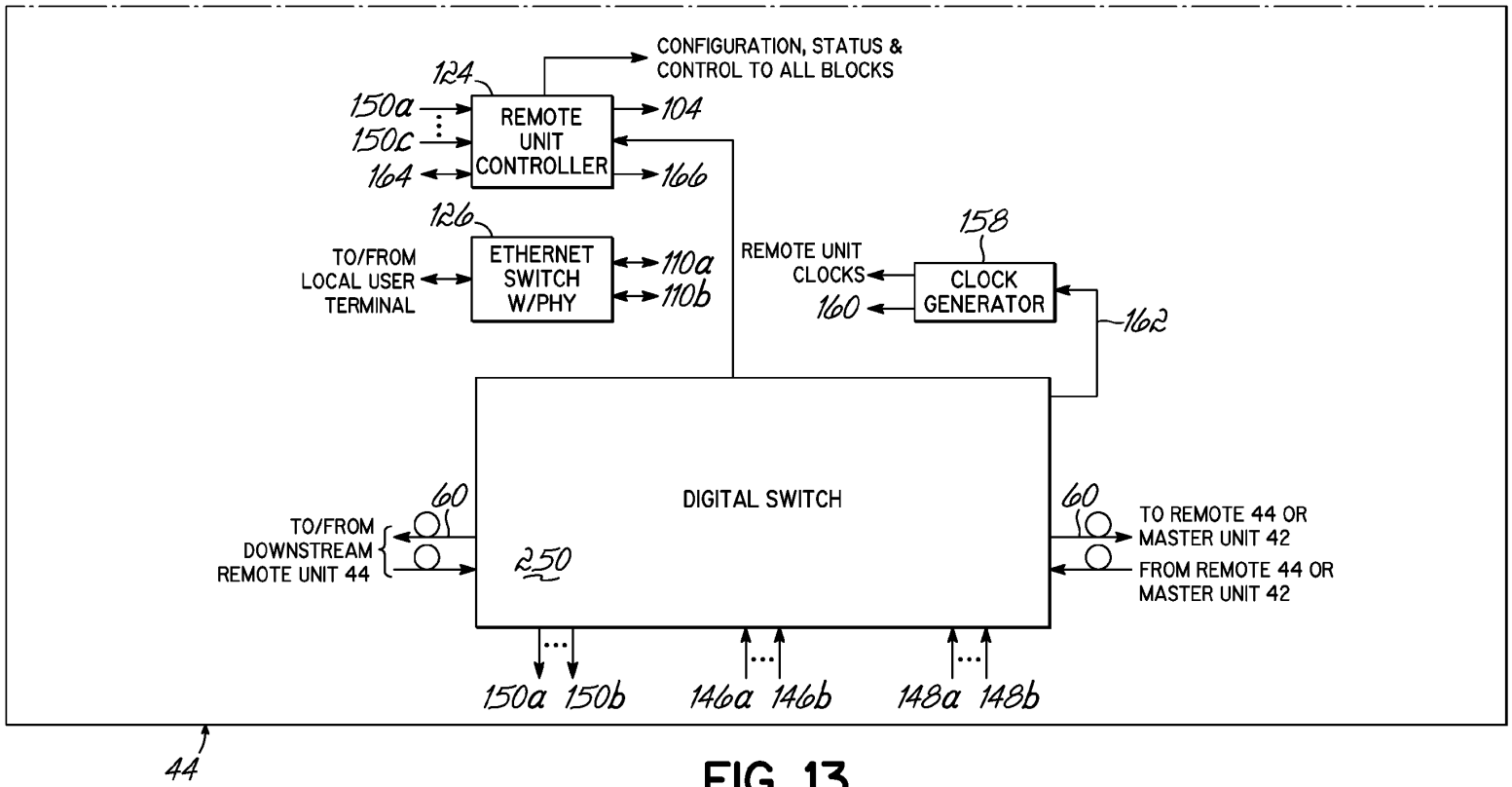
CONFIGURATION, STATUS & CONTROL TO ALL BLOCKS
124
150a
150c
164
REMOTE UNIT CONTROLLER
104
166
126
TO/FROM LOCAL USER TERMINAL
ETHERNET SWITCH W/PHY
110a
110b
REMOTE UNIT CLOCKS
160
158
CLOCK GENERATOR
162
DIGITAL SWITCH
60
TO/FROM DOWNSTREAM REMOTE UNIT 44
250
60
TO REMOTE 44 OR MASTER UNIT 42
FROM REMOTE 44 OR MASTER UNIT 42
150a 150b
146a 146b
148a 148b
44

FIG. 13

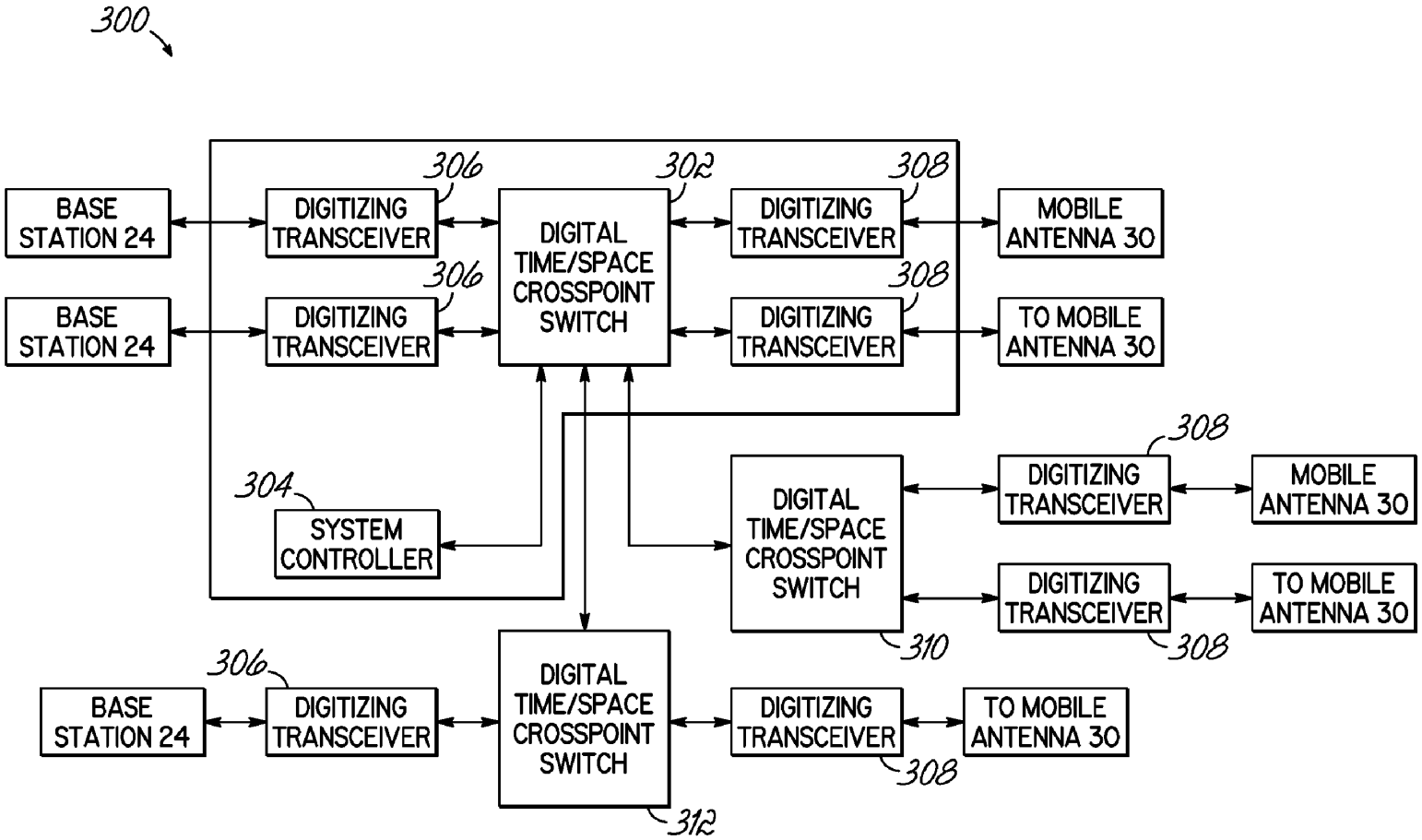
300
BASE STATION 24
BASE STATION 24
BASE STATION 24
DIGITIZING TRANSCEIVER
DIGITIZING TRANSCEIVER
DIGITIZING TRANSCEIVER
DIGITIZING TRANSCEIVER
DIGITIZING TRANSCEIVER
DIGITIZING TRANSCEIVER
DIGITIZING TRANSCEIVER
DIGITIZING TRANSCEIVER
DIGITAL TIME/SPACE CROSSPOINT SWITCH
DIGITAL TIME/SPACE CROSSPOINT SWITCH
DIGITAL TIME/SPACE CROSSPOINT SWITCH
SYSTEM CONTROLLER
MOBILE ANTENNA 30
TO MOBILE ANTENNA 30
MOBILE ANTENNA 30
TO MOBILE ANTENNA 30
TO MOBILE ANTENNA 30
302
304
306
306
306
308
308
308
308
308
310
312

FIG. 14

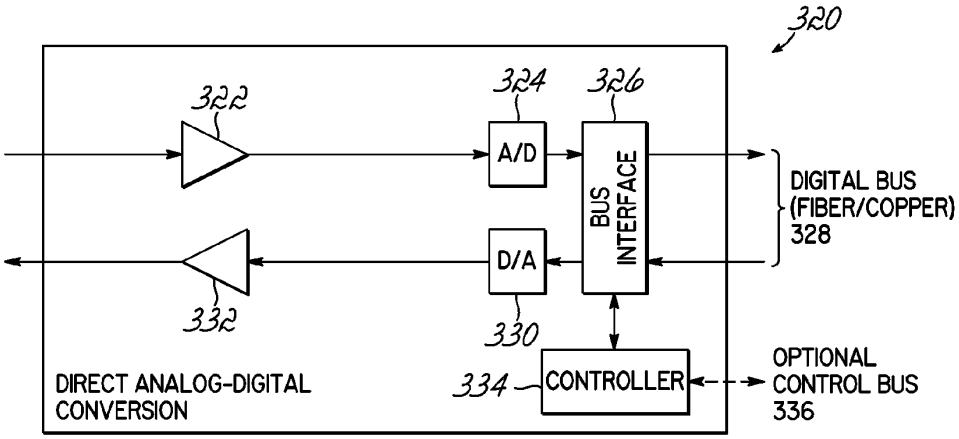

FIG. 15A

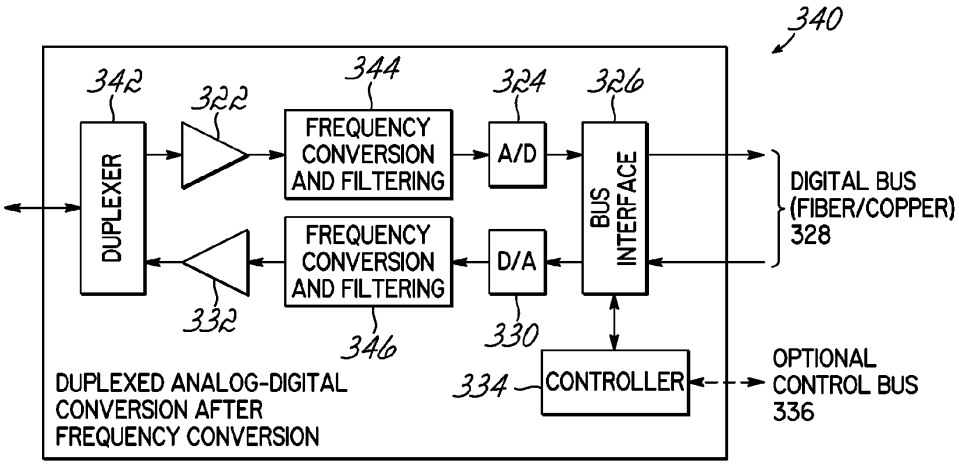

FIG. 15B

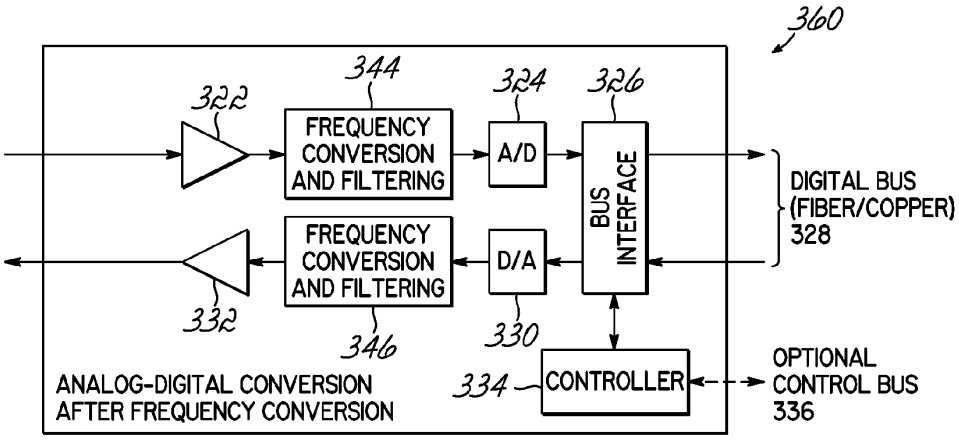

FIG. 15C

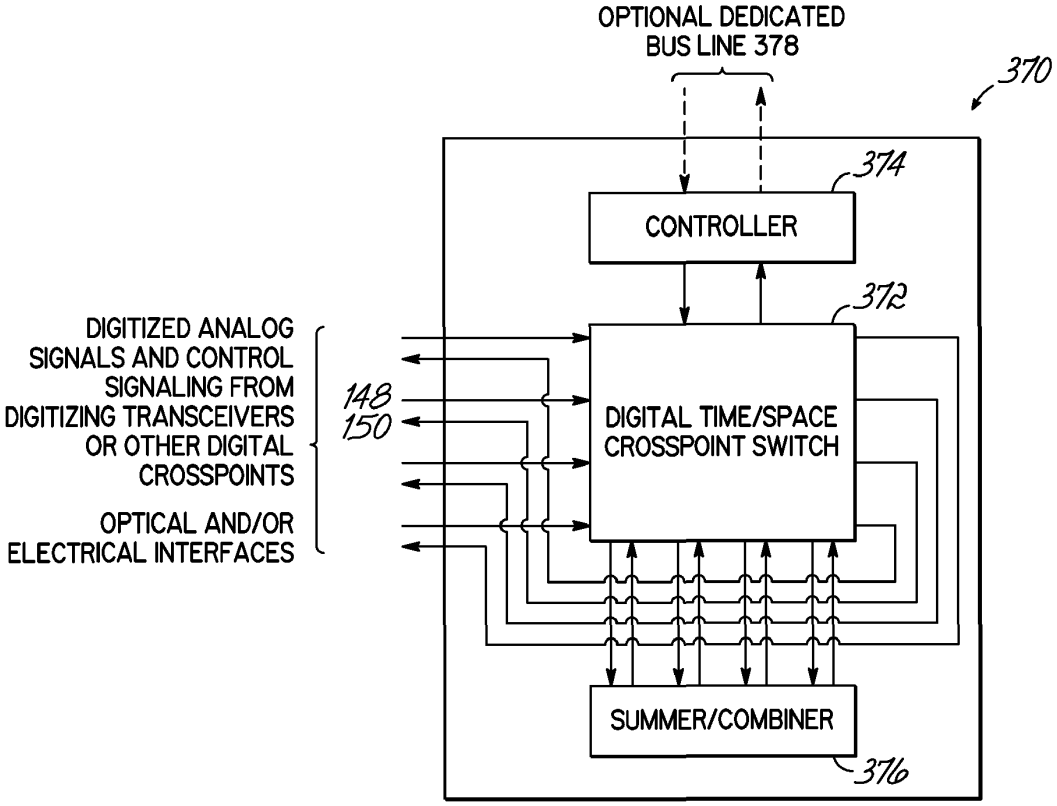
OPTIONAL DEDICATED
BUS LINE 378
370
374
CONTROLLER
372
DIGITIZED ANALOG
SIGNALS AND CONTROL
SIGNALING FROM
DIGITIZING TRANSCEIVERS
OR OTHER DIGITAL
CROSSPOINTS
OPTICAL AND/OR
ELECTRICAL INTERFACES
148
150
DIGITAL TIME/SPACE
CROSSPOINT SWITCH
SUMMER/COMBINER
376

FIG. 16

DISTRIBUTED ANTENNA SYSTEM FOR WIRELESS NETWORK SYSTEMS

FIELD OF THE INVENTION

The present invention is directed to wireless transceiver systems for use in wireless communication systems, and specifically is directed to a distributed antenna system for the wireless transceiver system.

BACKGROUND OF THE INVENTION

Contemporary cellular phone systems and broadband wireless metropolitan networks **20**, as shown in FIG. **1**, are generally divided into a number of cells **22** distributed in a pattern to preclude co-channel interferences and provide coverage of mobile and fixed subscriber units operating within the service area of the system. Each cell **22** includes a base station **24** that employs radio frequency (RF) transceiver equipment, antennas **26**, and wire line **28** communication equipment. Mobile/fixed subscriber units **30** within the geographic area of the cell site use RF transceiver equipment to communicate with RF transceivers within the base station **24**. The base station **24** relays voice and data traffic to/from the subscriber mobile units or devices (e.g. a phone) **30** and to/from a Mobile Telephone Switching Office **32** or Access Service Gateway which in turn are connected to a central network such as the public switched telephone network (PSTN) **34** or packet switched networks such as the Internet, for example.

To improve the capacity of a base station **24** to handle more mobile users **30**, cells **22** may be divided into sectors **38** or are further subdivided into smaller cells with the base station **24** being replaced with lower cost, reduced capability micro or pico cells **36**. In some configurations, distributed antenna systems (DAS) may be employed to optimize the RF distribution in larger cells in order to increase capacity at an even lower cost than with pico and/or micro cells **36**. These approaches permit the reuse of a limited number of expensive RF channels without incurring the costs of one or more complete base stations **24**. Further, these techniques may also be used to extend coverage to areas within the cell site where RF propagation may be limited by obstruction, such as in buildings and tunnels, or to areas where the amount of traffic (revenue) does not justify the investment required for a complete base station **24**. Distributed antenna systems allow the RF coverage to be adapted to the specific environment in a homogeneous way to assist in reducing the amount of introduced interference. In addition, the amount of extra traffic is kept low as only existing cells are distributed and no hand-off between cells is required.

In order to reduce the costs associated with the development of their communication systems, multiple service providers often locate their base stations **24** at the same geographical point. The providers can then share such items as antennas, antenna towers, primary power drops, land costs, and regulatory costs. These service providers may employ multiple RF bands, multiple channels within the same RF band and multiple air interface standards (e.g. CDMA, UMTS, TDMA, and WiMax). The cost for each service provider to extend coverage to increase capacity by deploying their own micro/pico cells and/or distributed antennas may be quite high. Further in some areas where RF propagation is poor, such as sporting venues or shopping malls, the owners of such facilities may not permit the installation of such equipment by multiple service providers for aesthetic reasons or because of space limitations.

Therefore, there is a need in the art for a system that maybe used by multiple service providers to extend coverage and increase capacity.

SUMMARY OF THE INVENTION

Embodiments of the present invention provide a distributed antenna system ("DAS") that can be used by multiple wireless service providers to increase the capacity and the coverage area of multiple communication systems without the need for each provider to incur the cost of deploying one or more micro /pico cells or DAS. To that end, embodiments of the invention are capable of simultaneously distributing signals between collocated base stations, operated by multiple service providers, and remote or fixed subscriber units. The signals may encompass multiple RF bands, multiple channels within those bands, and multiple air interface standards. Embodiments of the invention may provide to wireless service providers a solution that, when compared to micro cells or pico cells, allows them to cover certain environments at a lower cost with similar or even improved signal quality.

Some embodiments of the distributed antenna system include a system controller and a master unit communicating with at least one of a plurality of base stations. Remote units communicate over a high data rate media with the master unit and/or another upstream or downstream Remote unit. In some embodiments, the remote unit communicates over a digitally modulated optical channel with the master unit and/or other remote units.

In other embodiments, the distributed antenna system includes a controller and a digital time/space crosspoint switch controlled by the controller. A digitizing transceiver is in communication with the digital time/space crosspoint switch. The crosspoint switch is configured to transmit and receive digital data through the digitizing transceiver.

BRIEF DESCRIPTION OF THE DRAWINGS

The accompanying drawings, which are incorporated in and constitute a part of this specification, illustrate embodiments of the invention and, together with a general description of the invention given above, and the detailed description given below, serve to explain the invention.

FIG. **1** is a block diagram, of a contemporary cellular phone system and broadband wireless metropolitan network.

FIG. **2**A is a block diagram of the cellular phone system and broadband wireless metropolitan network of FIG. **1** employing an embodiment of the invention.

FIG. **2**B is a detailed view of a portion of FIG. **2**A.

FIG. **3** is a detailed block diagram of one embodiment of the invention.

FIG. **4** is a detailed block diagram of a Master Unit used in embodiments of the invention.

FIG. **5** is a block diagram of a TDD switch used in some embodiments of the invention.

FIGS. **6**A and **6**B are a detailed block diagram of a portion of a Remote Unit utilized in embodiments of the invention.

FIGS. **7**A and **7**B are a detailed block diagram of a portion of an alternate Remote unit utilized in embodiments of the invention.

FIG. **8** is a detailed block diagram of an embodiment of the invention including an Extension Unit.

FIG. **9** is a detailed block diagram of a portion of the Extension unit of FIG. **8**.

FIGS. **10**A and **10**B are a detailed block diagram of a portion of an alternate Master Unit utilized with embodiments of the invention.

FIG. **11** is a detailed block diagram of a cellular phone system and broadband wireless metropolitan network according to one of the embodiments of the invention.

FIGS. **12**A and **12**B are a detailed block diagram of a portion of another Master Unit similar to that of FIGS. **10**A and **10**B utilized with embodiments of the invention.

FIG. **13** is an alternate exemplary embodiment of a remote unit, such as in FIGS. **6**A-**6**B and **7**A-**7**B utilizing a digital crosspoint switch.

FIG. **14** is a block diagram of a master and remote/extension units employing digital crosspoint switched.

FIG. **15**A-C are block diagrams of different types of digital transceivers.

FIG. **16** is a block diagram of a digital crosspoint switch with a combining/summing function.

It should be understood that the appended drawings are not necessarily to scale, presenting a somewhat simplified representation of various features illustrative of the basic principles of the invention. The specific design features of the sequence of operations as disclosed herein, including, for example, specific dimensions, orientations, locations, and shapes of various illustrated components, will be determined in part by the particular intended application and use environment. Certain features of the illustrated embodiments may have been enlarged or distorted relative to others to facilitate visualization and clear understanding. In particular, thin features may be thickened, for example, for clarity or illustration.

DETAILED DESCRIPTION OF THE INVENTION

Embodiments of the present invention provide a distributed antenna system ("DAS") that can be used by multiple service providers to increase the capacity and the coverage area of multiple communication systems without the need for each provider to incur the cost of deploying one or more micro/pico cells or DAS. To do this, embodiments of the present invention are capable of simultaneously distributing signals between collocated base stations operated by multiple service providers, employing multiple RF bands, multiple channels within those bands, and multiple air interface standards and mobile or fixed subscriber units.

The system architecture of the invention is such that the number of RF bands/air interfaces, the number of service providers that can be accommodated, and the number of distributed antennas can be tailored for each coverage scenario to minimize cost. One possible implementation **40** of the system may be seen in the exemplary embodiment illustrated in FIGS. **2**A and **2**B. This implementation **40** includes a Master Unit **42** collocated with at least one base station **24**. The Master Unit **42** may be connected to the Mobile Telephone Switching Office **32** through base station **24** and via a wire line **28** connection. A group of distributed antenna units **44** is interconnected via high speed digital transport links **46**. The transport of RF signals in a digital format may assist in preventing any appreciable degradation due to the transport link. Spectral filtering may also be used to allow or prevent the distribution of specific radio signals. Additionally, the individual group delay of spectral components may be individually adjusted without hardware modifications. Thus, quality degrading delay differences between overlapping simulcast cells may be avoided.

The digital transport mechanism employed in embodiments of the invention allows for flexible use of the available bandwidth over the transport links. The dominant use of these links is generally for RF spectrum. A time division multiplexed format of the links permits transport of multiple signals, which may even be at the same RF frequency. Further, data from data communication links such as Ethernet may also be inserted in the digital transport links for system monitoring, configuration, control, as well as other user applications.

In a first embodiment of the Distributed Antenna System **50**, and as seen in FIG. **3**, one or more Master Units **42***a*, **42***b* and a System Controller **52** are collocated with the base stations **24***a-d* of one or more operators. In this embodiment, each Master Unit **42***a*, **42***b* is capable of handling up to six RF bands with up to four service providers per band for Frequency Division Duplexed (FDD) air interfaces and one operator per band for Time Division Duplexed (TDD) air interfaces, although one of ordinary skill in the art will appreciate that other Master Units may be capable of handling more or fewer RF bands, service providers or operators. The Master Units **42***a*, **42***b* are connected to the base stations **24***a-d* via conducted coupling interfaces **54**. The Master Units **42***a*, **42***b* are also connected to a series of distributed antenna units **44**, hereinafter referred to as Remote Units, via one to four wideband digitally modulated optical interfaces **56**, although one of ordinary skill in the art will appreciate that other Master Units may have more than four optical interfaces. Up to four Remote Units **44** may be daisy chained along each optical interface **56**. The use of multiple optical interfaces **56** permits the Remote Units **44***a-d* to be positioned in order to optimize coverage. The Remote Units **44***a-d* may also each be configured to handle up to six RF bands. Multiple Master Units **42***a*, **42***b* may be employed to provide for multiple sectors and additional service providers. One of ordinary skill in the art will recognize that more than four Remote Units **44** may be used. Similarly, one of ordinary skill in the art will recognize that more than six RF bands may also be used.

For each RF band **57***a*, **57***b*, the Master Unit **42***a*, **42***b* combines the downlink signal **58** from up to four base stations **24***a-d* on a per band basis and digitizes the combined signal. One of ordinary skill in the art will recognize there may be more or fewer base stations **24** communicating with the Master Unit **42***a*, **42***b*. The digitized and combined signals from each of the RF bands **57***a*, **57***b* may then be time division multiplexed into frames and converted to a single serial stream. The framed serial data is transmitted to the Remote Units **44***a-d* via the digitally modulated optical channels (DMOC) **60***a-d*. The Remote Units **44***a-d* convert the digitally modulated optical signal to an electrical signal, de-frame the various time slots to separate the signals from each band, de-serialize them and retransmit each band at an RF frequency, via a local antenna **62**, to subscriber units **30**.

The Remote Units **44***a-d* also receive RF voice and/or data signals, designated as the uplink signal **64**, from the customer or subscriber units/devices **30** via the local antennas **62**. Each RF uplink band is digitized separately. The Remote Units **44***a-c* may also receive a serial digital signal from the Remote Units **44***b-d* that precede it in the daisy chain. This digital signal contains the uplink signals received by the preceding Remote Units **44***b-d*. This latter signal is converted to an electrical format and the uplink signal for each band is separated and added to the locally received uplink signals from each RF band in use. The summed uplink signals for each band are combined into a single serial digital protocol and transmitted via the digitally modulated optical link **60***a-d* to the next Remote Unit **44***a-c* or the Master Unit **42***a*. The Master Unit **42***a* converts the optical uplink signals to an electrical signal, separates the signals from each band, converts them to analog signals, translates each to the appropriate radio frequency and sends them to the appropriate base stations **24***a-d*.

In some embodiments, the Remote Units **44***a-d* may allow for the implementation of several RF signals on the same frequency as may be necessary for transmit and receive diversity. This is generally implemented as dedicated hardware for the diversity path and the digitized signals may be multiplexed with the main signals on the same high speed serial link **60**. The implementation is not limited to diversity. For example, MIMO (Multiple Input Multiple Output) configurations may also be used, such as configurations N×M with N transmitters and M receivers. Furthermore, the signals of multiple sectors which may occupy the same frequency band may be sent over the same Remote Unit location. Dedicated Remote Unit hardware may be required in some embodiments for this feature.

Each DMOC **60***a-d* is a full duplex channel that may be implemented using two fibers **66***a*, **66***b* in some embodiments as two half duplex channels, one for uplink and one for downlink data, or in other embodiments may use a single fiber **67** as illustrated in FIG. **3**. In the single fiber **67** implementation, the uplink **64** signals and downlink **58** signals are carried on different wavelengths and a wavelength division multiplexer (WDM) is employed to combine or split the two optical signals. The single fiber **67** implementation may also be implemented using bi-directional optical transceivers. In some embodiments, high link margin fiber optic transceivers may be used to permit the use of existing older fiber cable which may be of poor quality or have multiple splices in order to further reduce the installation cost. The fiber may be either single or multimode optical fiber and may also be used for the transport link. The DMOC **60** including the optical transceiver **108** may also be replaced by a different transceiver for high data rate media such as coax cable, twisted pair copper wires, free space RF or optics, or shared networks such as Ethernet 68, SONET, SDH, ATM, PDH, among others.

In addition to the digitized signal from each band, the uplink and downlink digitally modulated optical links **60** also contain Operation and Maintenance (O&M) Ethernet data and one of four User Ethernet 10 Mb/s, 100 Mb/s, 1 Gb/s, or higher data rate signals. The former signal is used to configure and control the system and monitor system status. The User Ethernet signals may be used by the service providers as they see fit. The Controller **52** provides overall supervision and control of the Master **42** and the Remote Units **44** as well as alarm forwarding.

Focusing now on the Master Unit **42**, FIG. **4** contains a detailed block diagram of the Master Unit **42**. Each Master Unit **42** may contain from one to six radio channels (hereinafter referred to as a "path") **70**, from one to four digitally modulated optical channels **72**, a controller **74**, a clock generator **76**, and an Ethernet switch **78**.

In one embodiment, each radio path, such as **70***a*, may be configured to handle a single RF band to and from base stations **24***a-d* for example. For a FDD air interface, the radio channels **70***a* employ a combiner and a duplexer **80** to handle the uplink signal (subscriber **30** to base station **24**) and the downlink signal (base station **24** to subscriber **30**). An RF downconverter **82** amplifies the received signal from the combiner/duplexer **80** (downlink signal) to ensure that an A/D converter **84** is fully loaded. The RF downconverter **82** sets a center frequency of a band within the A/D converter pass band. The wideband A/D **84** digitizes the entire downlink band of the air interface to ensure all downlink channels are digitized. A resampler **86** converts the signal to a complex format, digitally downconverts the frequency band in some cases, decimates and filters the signal, and resamples it. This reduces the amount of data associated with the downlink signal, such as **88***a*, that has to be transferred over the optical lines and synchronizes the rate of the digitized data to the optical network bit rate.

The uplink section of the radio channel **70***a* sums **90** the uplink signals, such as signals **89***a-d* for its assigned band from the Remote Units **44** after they are converted to an electrical signal. The summation **90** is resampled, interpolated to change to a different data rate in some cases, and upconverted by the resampler **92** and then converted to an analog form by the D/A converter **94**. The RF upconverter **96** translates the center frequency of the analog signal to the appropriate frequency for the air interface and amplifies it. The amplified signal is applied to the combiner/duplexer **80** and is routed back to the base stations **24***a-d*.

In embodiments utilizing TDD air interfaces, the combiner and duplexer are replaced by a switching function **98** shown in FIG. **4** for example in radio channel **70***b* and detailed in FIG. **5**. While the Master Unit **42** is receiving the downlink signal from base station **24**, a RF amplifier in the RF upconverter is disabled and the shunt switch **100** shunts the RF amplifier to ground to further reduce leakage. During intervals when the Master Unit **42** is sending the uplink signal to the base station **24**, the RF amplifier is enabled, the shunt switch **100** is opened and a series switch **102** is opened to protect the RF downconverter from damage due to high power levels. The switch control timing **104** is determined by the Master Unit Controller **74** from the downlink signal **88***b*. Additionally, the formatter **106** may apply a data compression to reduce the redundant digital information included in the serial data stream before it is sent to the transmitter in the electro-optical transceiver **108**. The compression may allow for saving bandwidth or for using a less costly transceiver with lower bit rate. The compressed serial data may be converted into an uncompressed data stream after being received on the opposite ends in the optical received of **108** by the receiver side formatter **106**.

Each digitally modulated optical channel **72***a,b* is composed of a formatter **106** and an electro-optical transceiver **108**. On the outgoing side, the formatter **106** blocks, into time division multiplexed frames, the digitized downlink signal **88***a-b* from each RF band along with a customer Ethernet in Reduced Media Independent Interface (RMII) format **110***a-b*, O&M data **112***a-c* and synchronization information. In other embodiments, other interfaces such as MII, RMII, GMII, SGMII, XGMII, among others may be used in place of the RMII interface. The framed data may be randomized by exclusive or'ing (XOR) it with the output of a linear feedback shift register to remove long strings of logic ones or zeros. Other known coding formats such as 8 bit/10 bit or 64 bit/66 bit coding may also be used, but may result in a decrease in efficiency in the use of the digital serial link. This digital data is then converted to a serial stream which is used to modulate an optical transmitter within the electro-optical transceiver **108**. In the single fiber **67** implementation, a wavelength division multiplexer (WDM) **109** is employed, such as in DMOC **72***b*, to combine or split the two optical signals.

For incoming signals from the Remote Units **44**, the electro-optical transceiver **108** converts the optical signal to an electrical signal. The formatter **106** phaselocks to the incoming bit stream and generates a bit clock that is phaselocked to the data rate and aligned with the serial data stream. The formatter **106** then converts the serial stream to a parallel digital data stream, de-randomizes it and performs frame synchronization. It then breaks out the digitized uplink signal for each band, buffers each band and routes the bands to the appropriate radio channel **70***a*, **70***b*. Finally, the formatter **106** breaks out the buffers and O&M Ethernet data **112***a-c* and the

user Ethernet data **110***a-b* and routes them to the Controller **74** and the Ethernet switch **78**, respectively.

The Master Unit Controller **74** uses locally stored information and information from the O&M Ethernet **68** to configure and control the other blocks in the Master Unit **42**. It also passes this information to the Remote Units **44** and reports status of the Remote Units **44** and the Master Unit **42** to the main Controller **52** via the O&M Ethernet **68**. When a radio channel, such as **70**b, is assigned to a TDD air interface, the Controller **74** also uses the corresponding downlink signal **88**b to derive TDD switch control timing **104**.

The System Controller **52** generally has overall system control. The Master Unit Controller **74** functions to configure individual modules as well as supervise individual modules. As part of the configuration and supervision functions, the Master Unit Controller **74** is operable to determine the uplink/downlink switch timing in TDD systems by decoding the downlink signaling or acquiring it from a different source such as the time variant UL RSSI, or some base station clock signal provided from an external source. The downlink frame clock in TDMA systems may be determined and distributed by decoding the downlink signaling to allow time slot based functions such as uplink or downlink muting, uplink or downlink Received Signal Strength Indication ("RSSI") measurements within time slots, uplink and downlink traffic analysis, etc. The Master Unit Controller **74** may detect active channels in the RF spectrum to assist in or automatically configure the filter configuration in the resampler **86**, **92**. Optimal leveling of the individual signals in the resampler may also be determined by measurement of the RSSI of the various signals in the downlink RF band. The Remote Unit Controller **124** may perform similar tasks in the uplink of the Remote Unit **44**.

Additionally, the Master Unit Controller **74** may measure the pilot signal strength of CDMA or Orthogonal Frequency-Division Multiplexing ("OFDM") signals to properly set the level of the downlink signals, as the RSSI can vary at different capacity loading of a base station cell. The pilot signals generally remain constant with a configured ratio between pilot level and a maximum composite for full loading, the required headroom for the signals may be maintained. The Master Unit Controller **74** may also measure and supervise the signal quality of the provided downlink channels. In case of signal degradation from the base station an alarm may be set and the operator can focus on the base station without having to troubleshoot the DAS system.

In some embodiments, the Master Unit Controller **74** determines the amount of channels for a narrowband base station standard such as Global System for Mobile communications ("GSM"). Together with the measurement of the Broadcast Control Channel ("BCCH"), which is constant in power, the proper headroom that is required for a multichannel subband may be determined and overdrive or underdrive conditions may be avoided. In other embodiments, the Master Unit Controller **74** monitors the crest factor of a transmitted spectrum in the presence of multiple channels. The crest factor may provide input to the leveling of the transmit power or the power back-off of particular gain stages of the system. The configured headroom is generally higher than the measured crest factor to avoid signal degradation due to clipping or distortion. In addition, a crest factor reduction mechanism may be employed in the resampler in some of the embodiments to reduce the crest factor and make more efficient use of the RF power amplifier in the Remote Unit **44** or assist in reducing the number of required bits per sample that need to be transmitted over the link.

The clock generator **76** may use a stable Temperature Compensated Voltage Controlled Crystal (TCVXO) to generate stable clocks and reference signals **114** for all Master Unit **42** functional blocks. Although, one of ordinary skill in the art will appreciate that other devices or crystals may also be used to generate clocking signals as long as they are capable of producing the stable clocks required by the system.

Focusing now on the Remote Unit **44**, FIG. **6**A and FIG. **6**B contain a detailed block diagram of the Remote Unit **44**. Each unit **44** may contain from one to six radio channels **120**, one or two DMOCs **122**, a Remote Unit Controller **124** and an Ethernet switch **126**.

The DMOCs **122** may be designated as the downstream **128** and upstream channels **130**. The downstream channel **128** is connected to a Remote Unit **44** that precedes this Remote Unit in the daisy chain. The upstream channel **130** is connected to a Master Unit **42** or another Remote Unit **44**. The DMOC **122** functional blocks are very similar to those in the Master Unit **42**. Both consist of a formatter **132** and electro-optical transceiver **134**. Outgoing data is buffered, formatted into frames, randomized,parallel to serial converted and used to modulate an optical transmitter in the electro-optical transceiver **134**. Incoming data is converted from an optical to electrical format, bit synchronized, de-randomized, frame synchronized and converted to a parallel format. The various data types are then broken out buffered and distributed to other function blocks within the Remote Unit **44**. In some embodiments, formatter **132** may implement compression and decompression schemes to reduce bandwidth over the digital optical link.

The radio channels in the Remote Unit **44** are functionally similar to those in the Master unit **42**. Each radio channel is configured to handle a single RF band. Unlike the Master Unit **42** radio channels **70**, the Remote Unit **44** radio channels **120** are connected via a cross band coupler **136** to an antenna **62**. For FDD air interfaces, the radio channels, such as radio channel **120***a*, employ a duplexer **138** to split the uplink (subscriber **30** to base station **24**) and the downlink signal (base station **24** to subscriber **30**). Duplexers, cross-band combiners and couplers may be optional for some embodiments of either the Master Unit **42** or Remote Units **44**. In these embodiments, additional antennas may replace the duplexer **138** and cross-coupler **136** in the Remote Units **44**. Extra cables would be required in the Master Unit **42**. A RF downconverter **140** amplifies the received uplink signal from the antenna **62** to ensure an A/D converter **142** is fully loaded and sets the center frequency of the band within the A/D converter pass band. The wideband A/D **142** digitizes the entire uplink band of the air interface to ensure all uplink channels are digitized. A resampler **144** converts the uplink signal to a complex format, digitally downconverts the signal in some cases, decimates and filters the signal, and resamples it with a multi-rate filter bank. This reduces the amount of data that has to be transferred over the optical links and synchronizes the rate of the digitized data to the optical network bit rate. The output of the resampler **144** is added to the uplink signals **146***a* from the downstream Remote Units **44** in summer **147**. The summed uplink signal **148***a* for each band is then sent to a formatter **132** in the upstream channel **130** in the DMOC **122**.

The downlink signal **150** for each band (**150***a*, **150***b*) is interpolated and frequency shifted in the resampler **152**. The group delay of individual spectral components can be adjusted via filters or delay elements in the resampler **152**. The signal is then converted to an analog form by the D/A converter **154**. The RF upconverter **156** translates the center frequency of the analog downlink band to the appropriate

frequency for the air interface and amplifies it. The amplified signal is then applied to the antenna **62** and transmitted to the subscriber units **30**.

For TDD air interfaces, the duplexer **138** is replaced by the switching function **98** shown in radio channel **120***b* and FIG. **5**. While the Remote Unit **44** is receiving the uplink, the RF power amplifier in the RF upconverter **156** is disabled and the shunt switch **100** shunts the RF power amplifier to ground to further reduce leakage. When the Remote Unit **44** is transmitting the downlink signal, the RF power amplifier is enabled, the shunt switch **100** is opened to permit the downlink signal to reach the antenna **62** and the series switch **102** is opened to protect the RF downconverter **140** from damage due to high power levels. As with the Master Unit **42**, the switch control timing **104** is determined by the Controller **124** from the downlink signal **150***a*, **150***b*.

The clock generator **158** includes a Voltage-controlled Crystal Oscillator (VCXO) that is phaselocked to the incoming serial data stream bit rate via a narrowband phaselocked loop (PLL). The VCXO output is split and is used as the frequency reference **160** for the local oscillators in each radio channel **120***a,b*, the sampling clocks for the A/D **142** and D/A **154** converters, and a clock for the other blocks in the Remote Unit **44**. One of ordinary skill in the art will realize that the long term frequency accuracy should be good to ensure the local oscillators are on frequency and that the short term jitter levels should also be low to ensure that the jitter does not corrupt the A/D and D/A conversion processes. By phaselocking to the data rate of the optical link, which is derived from the stable TCVCXO in the Master Unit **42**, the Remote Unit **44** does not require an expensive oven compensated oscillator or a GPS disciplining scheme to maintain long term frequency accuracy, thereby, making the more numerous Remote Units **44** less expensive. The use of a narrow band PLL and a crystal controlled oscillator may assist in reducing short term jitter for the A/D and D/A converter clocks. Using the recovered, jitter reduced clocks **162** to re-clock the transmit data in the optical links at each Remote Unit **44** reduces jitter accumulation which may assist in improving A/D and D/A converter clocks in the downstream Remote Units **44** and may assist in reducing the bit error rate (BER) of the optical communication channels **122**.

The Remote Unit Controller (RUC) **124** uses locally stored information and information from the O&M Ethernet **68** to configure and control the other blocks in the Remote Unit **44**. Downstream RMII **112**d and upstream RMII **112**e may also be supplied to the formatter **132**. In addition, local O&M data **166** may be configured at a local O&M terminal **164**. Remote Unit **44** also passes this information to the up and downstream Remote Units **44** and/or Master Unit **42**. The RUC **124** additionally uses the appropriate downlink signal to derive TDD switch control timing **104** when required.

In an alternate embodiment of the radio channel **120***c* utilized in a Remote Unit **44**, the radio channel **120***c* may also employ digital pre-distortion to linearize the power amplifier. This embodiment of the radio channel **120***c* in a Remote Unit **44** is shown in the block diagrams of FIGS. **7**A and **7**B. In this embodiment, a third signal path may be added to one or more radio channels **120***c*. The third path couples off the downlink signal after power amplification and digitizes it. The signal from the antenna **62** is received in an RF downconverter **168**, which amplifies the received signal to ensure an A/D converter **170** is fully loaded and sets the center frequency of the band within the A/D converter pass band. The wideband A/D **170** digitizes the entire uplink band of the air interface to ensure all uplink channels are digitized. The digitized signal is compared to a delayed version of the downlink signal in the digital pre-distortion unit **172** and the difference is used to adaptively adjust the gain and the phase of the signal prior to D/A conversion to correct for non-linearity in the power amplifier.

In an alternate embodiment of the Distributed Antenna System **180**, the Master Units **42***a,b* are not collocated with the base stations **24**. In this embodiment, the Master Units **42***a,b* are connected to an antenna **182** and the wire line interfaces to the base stations are replace by a multi-band RF link, as depicted in FIG. **8**, including a combiner **184** and a crossband coupler **186**. The combiner **184** and crossband coupler **186** work to both combine and divide signals from each of the base stations **24** of the multiple service providers. This configuration still permits multiple service providers to use the system thereby retaining the cost benefits of only deploying one system while extending coverage further than can be done with the embodiments having a collocated system. Additionally, in this embodiment, the combiner/duplexer **80** in the Master Unit **42** may be replaced with a duplexer. As with other embodiments, each Master Unit **42** may support up to six RF bands, though in other embodiments the number of RF bands may be more than six.

In another embodiment of the Distributed Antenna System, and as also depicted in FIG. **8**, one of the optical links from the Master Unit **42** may be connected to an Extension Unit **192**. In this embodiment, the Master Unit(s) **42** may be collocated with the base station(s) **24** as shown in FIG. **3**, or the Master Unit(s) **42** may be not be collocated with the base station(s) **24** as shown in FIG. **8**. The Extension Unit **192** provides additional digitally modulated optical links for distribution of voice and data traffic, command and control, and user data for to up to nine Remote Units **44**, thereby, increasing the number of Remote Units **44** a single Master Unit **42** can handle. The Extension Unit **192** may communicate with Remote Units **44** using a two fiber **66***a*, **66***b* approach using the same wavelength in both directions, or Extension Unit **192** may communicate using a single fiber **67** using two wavelengths and a WDM (**204** in FIG. **9**).

FIG. **9** is a detailed block diagram of an Extension Unit **192**. The Extension Unit includes DMOCs **194**, a controller **196**, a clock generator **198**, an Ethernet Switch **200** and summers **202**. One of the DMOCs **194***a* connects to the Master Unit **42** while the remaining DMOCs **194***b-c* each connect to a different Remote Unit **44**. The DMOC **194***a* connected to the Master Unit **42** fans out data from the Master Unit **42** to the other DMOCs **194***b-c*. Data from each Remote Unit **44** is converted to an electrical format by the DMOCs **194***b-c* and is combined into a single framed optical stream and sent to the Master Unit **44**. As with the other units, the DMOC can employ two fibers **66***a*, **66***b* or a single fiber **67** using two wavelengths and a WDM **204**. The clock generator **198** generates clocks for all Extension Unit **192** functions by phaselocking a VCXO to the rate of the serial bit stream from the Master Unit **42** in the same manner employed in the Remote Unit **44** above.

The summers **202***a*, **202***b* for each band combine the digitized uplink data **206***a-b* or **208***a-b* for that band from each Remote Unit **44** for transmission to the Master Unit **42**. This the combined uplink data **210***a*, **210***b* assists in reducing the bit rate on the optical link to the Master Unit **42**.

Master Unit **42** O&M data **112** is transmitted to the Extension Unit Controller **196** and all of the Remote Units **44**. User data (User RMII data **212***a*, **212***b*) for each of the remote units is also sent to all of the Remote Units **44** and the Extension Unit Ethernet Switch **200**. O&M data (including local O&M data **216** and O&M data **214***a*, **214***b* from the Remote Units

44) and user data **212***a*, **212***b* from the Remote Units **44** and the Extension unit **192** is framed and sent to the Master Unit **42**.

The Ethernet Switch **200** routes the user Ethernet data **110** (including **110***a*, **110***b* from FIG. **4**) from the Master Unit **42** to/from the Remote Units **42**. The Extension Unit Controller **196** uses locally stored information and information from the O&M Ethernet to configure and control the other blocks in the Extension Unit **196**.

In another embodiment of the Distributed Antenna System **220**, one or more of the analog RF interfaces with the base station **24** may be replaced with interfaces that carry the uplink and downlink signals in a time division multiplexed frame digital format such as a Common Public Radio Interface (CPRI) or the Open Base Station Architecture Initiative (OBSAI) link. For FDD air interfaces the interface is full duplex, so the physical layer of each interface can employ two conducted coupling interfaces or two fiber optic channels or a single fiber channel that uses WDM. For TDD air interfaces, the interface is half duplex so the physical layer can employ a conducted coupling interface or a single fiber employing TDM or two fibers. Single or multimode fibers can be employed.

In this embodiment, the radio channel **70***c* of the Master Unit **42** is modified as shown in FIGS. **10**A and **10**B to permit operation with digitized or analog RF signals. FIG. **10**A depicts one radio channel **70***a* with four analog RF base station interfaces **24***a-d* and one radio channel **70***c* with three analog RF interfaces **24***e-g* and one digital RF interface **24***h*. For FDD air interface standards, each RF band may be configured to accommodate any combination of digital and analog RF interfaces up to a sum total four. For TDD interfaces, only a single interface, either digital or analog, may be accommodated.

For the digital RF base station interface **24***h*, a transceiver **222** converts the signal from the interface physical layer format (e.g. Optical, Ethernet, Low Voltage Differential Signaling (LVDS)) to standard logic levels. A formatter **224** de-frames and bit synchronizes the signal, decodes the signal, performs a parallel to serial conversion and rate buffers the signal. A resampler **226** converts the signal to a complex format if required, decimates and filters the signal and re-samples it. This reduces the amount of data that has to be transferred over the optical links **60** and synchronizes the rate of the digitized data to the optical network bit rate. The re-sampled digitized RF signal is summed in summer **228** with the composite digitized RF signal from any analog RF channels and the resulting summation **88***a* is transmitted to the Remote Units **44**.

The uplink signal for the given band from each group of Remote Units **44** is summed in summer **90** and re-sampled in resampler **230**. The re-sampling converts the summed signal to the sampling rate and bandwidth of the digitized RF link. The formatter **224** then frames the data, codes the data, converts it to a serial format and divides it in to packets if necessary. The transceiver **222** converts it the appropriate physical layer for the interface.

In another embodiment of the Distributed Antenna System **240**, Master Units **42** not collocated with the base stations can exchange digitized RF signals **242** with those base stations in addition to the broadcast analog RF signals, as shown in FIG. **11**. In this variation of the invention, the Master Unit Radio Channels **70** are modified as shown in FIGS. **12**A and **12**B, by the addition of a digital RF channel(s). The operation of the digital channel is identical to the one in FIGS. **10**A and **10**B. Multiple digital radio channels can be employed for each band.

In an alternate configuration of the Distributed Antenna System, digital transceivers may create the data stream. In this configuration, the formatters and electrical/optical links may be replaced with Digital Crosspoint Switches **250** as seen in the exemplary block diagram in FIG. **13**. A digital system may be implemented such that the distribution of signal streams may be configured employing digital time/space crosspoint switches, as illustrated, for example in FIG. **13**.

FIG. **14** is a block diagram of an exemplary digital RF distribution and switching architecture **300** for base stations and their corresponding remote units. Using a crosspoint switch **302**, multiple base stations may be combined over a single digital link. All signals between the head-end and remote unit may be routed through a switch **302** allowing any input to be connected to any output. This architecture may also have multiple switching matrices that could be used to implement more complex distribution schemes. A conference bridge type of functionality in the switches may be used to combine the uplink signals **64** on one channel that come from different mobile units **30**.

The digital architecture **300** may be under the control of a system controller **304** that controls, coordinates and operates the digital time/space crosspoint switch **302**. The switch **302** transmits and receives digital data through digitizing transceivers **306** which may replace the radio channels **120** of embodiments discussed above. Some of the digitizing transceivers **306** convert the analog downlink signals of the base stations **24** to digital signals and transmit those digital signals to the switch **302**. Other digitizing transceivers **308** convert the digital downlink signals to analog and transmit to the mobile units **30**. Similarly, for uplink signals, the digitizing transceivers **308** convert the analog signals from the mobile units to digital signals and transmit those signals to the switch. Digitizing transceivers **306** convert the digital uplink signals to analog to send to the base stations **24**. Additional crosspoint switches may also be used to expand the coverage such as with a switch **310** acting as an extension unit connecting through digitizing transceivers **308** to additional mobile units **30**. Additional switches, such as switch **312**, may also be added from switch **302** to expand coverage between additional base stations **24** and mobile units **30**.

The use of uplink muting may assist in reducing the noise in the uplink signals that are coupled into the base station input when there are no active mobile units. This may be implemented in some embodiments using RSSI base detection as well as sophisticated detection of even CDMA uplink signals. In a case of an uplink signal reaching and being received by multiple Remote Units, a maximum ratio combining mechanism may be used. The combining mechanism may be better suited for narrowband signals than for wide band signals due to the increased decorrelation of the wide bandwidth signals and their increased immunity to fading.

FIGS. **15**A-**15**C illustrate several types of digital transceivers **306**, **308** that may be used with embodiments of the digital architecture **300** discussed above. For example in FIG. **15**A, a digital transceiver **320** may be configured for a direct analog-digital conversion with power amplifier **322** amplifying incoming downlink signals. The amplified downlink signals are converted to digital signals with A/D converter **324** and are put on bus interface **326** in preparation for sending them on a digital bus **328** to a crosspoint switch, such as switch **302**. The digital bus may be optical fiber, coaxial cable, twisted pair copper wires, free space RF for optics, or may even share existing networks such as Ethernet in some embodiments. Uplink signals are received at bus interface **326**, converted from digital to analog with D/A converter **330** and amplified

with power amplifier **332** before transmitting. A controller **334** with an optional controller bus **336** may be utilized in some embodiments for controlling the incoming and outgoing signals on the bus **328**.

FIG. **15**B illustrates a digital transceiver **340** with duplexed analog-digital conversion after frequency conversion. The duplexer **342** in the transceiver **340** may implement a full duplex channel as two half duplex channels, one for uplink and one for downlink data in some embodiments, or in other embodiments may use a single channel. In the single channel implementation, the up and downlink signals may be carried on different wavelengths and a wavelength division multiplexer (WDM) (not shown) may be employed to combine or split the signals. In this embodiment, a signal is received at the duplexer **342** and split off as a downlink signal prior to being amplified by power amplifer **322**. The amplified signal is frequency converted and filtered at block **344** before being converted to digital with A/D converter **324**. The digital signal is then placed on the bus interface **326** and transmitted over bus **328** similar to the embodiment above. Uplink signals are received on the bus interface **326** and converted from digital to analog with D/A converter **330**. The analog signals are then frequency converted and filtered at block **346** before being amplified by power amplifier **322**. The amplified uplink signal is then sent through duplexer **342** prior to being transmitted back to a base station **24**, for example. The embodiment of a digital transceiver **360** in FIG. **15**C is similar to this embodiment, though the digital transceiver **360** in FIG. **15**C does not contain a duplexer. Digital filtering may be used to save bandwidth on the optical link if only selected parts of an RF band are transmitted. Filtering and decimation also assist in reducing the sampling rate for an RF band.

FIG. **16** illustrates a block diagram of an alternate digital time/space crosspoint switch **370** with a combining function. This embodiment contains the crosspoint switch **372** under the control of control **374**, similar to system controller **304** in FIG. **14**. The controller **374** may communicate with other controllers or the system control **304** over an optional dedicated control bus **378**. The switch **372** receives signals such as signals **148** and **150** from the embodiments illustrated in FIGS. **6**A, **6**B, **7**A, and **7**B. Additionally, a summer/combiner **376** may be employed for uplink signals, intelligently summing the signals and not the noise for transmission. Muting techniques may be used to reduce uplink noise for channels where there are not uplink transmissions from mobile units **30**. The switch may be configured in a point-multipoint configuration where a single downlink signal may be repeated and transmitted over multiple outputs to other switches, remote units or mobile units **30**.

While the present invention has been illustrated by a description of one or more embodiments thereof and while these embodiments have been described in considerable detail, they are not intended to restrict or in any way limit the scope of the appended claims to such detail. Additional advantages and modifications will readily appear to those skilled in the art. The invention in its broader aspects is therefore not limited to the specific details, representative apparatus and method, and illustrative examples shown and described. Accordingly, departures may be made from such details without departing from the scope of the general inventive concept.

What is claimed is:

1. A distributed antenna system comprising:

a master unit configured for receiving downlink signals from a plurality of base stations and for transmitting uplink signals to the plurality of base stations, the downlink signals being associated with a plurality of wireless protocols and a plurality of bands, wherein the master unit is configured to output the downlink signals as digitized downlink signals, the master unit comprising:

a first radio channel having circuitry comprising a duplexer, the circuitry being configured to (i) receive downlink signals associated with a first band of the plurality of bands from the plurality of base stations and (ii) transmit the uplink signals associated with the first band to the plurality of base stations;

a second radio channel comprising a switch configured for, responsive to transmitting the uplink signals associated with a second band to the plurality of base stations, opening and protecting an RF downconverter in the second radio channel; and

a controller configured for providing switch control timing for controlling operation of the switch;

an extension unit configured to receive the digitized downlink signals from the master unit over a first fiber optic cable; and

a remote unit configured for receiving downlink signals from the extension unit over a second fiber optic cable, wherein the remote unit is configured for wirelessly transmitting the downlink signals as radio frequency (RF) signals using the plurality of wireless protocols and in the plurality of bands.

2. The distributed antenna system of claim **1**, wherein the remote unit is a first remote unit, the distributed antenna system further comprising:

a second remote unit configured for receiving at least a subset of the downlink signals from the remote unit over a third fiber optic cable, wherein the second remote is adapted to convert the subset of the downlink signals to second RF downlink signals and to wirelessly transmit the second RF downlink signals.

3. The distributed antenna system of claim **2**, wherein the first remote unit is configured for receiving a second uplink signal from the second remote unit and for summing the second uplink signal with a first uplink signal generated from an RF uplink signal wirelessly received by the first remote unit to generate combined uplink signals, the first remote unit being configured to provide the combined uplink signals to the extension unit over the second fiber optic cable.

4. The distributed antenna system of claim **1**, wherein the master unit comprises:

a digitally modulated optical channel configured for communicating with at least one of the first radio channel or the second radio channel and for further communicating with the remote unit;

a wavelength division multiplexer configured for being in communication with the digitally modulated optical channel, the wavelength division multiplexer being configured to combine or split the uplink and downlink signals on the digitally modulated optical channel.

5. The distributed antenna system of claim **1**, wherein the master unit comprises a digitally modulated optical channel, the digitally modulated optical channel comprising:

a formatter configured to:

block, into time division multiplexed frames, the digitized downlink signals and an Ethernet signal;

convert the time division multiplexed framed downlink signals into a downlink serial stream;

phaselock to a serial stream representing the uplink signals from at least one of the remote unit or the expansion unit;

convert the serial stream to a parallel uplink digital data stream;

split the parallel uplink digital data stream into a plurality of bands comprising uplink digital signals; and

route each of the plurality of bands comprising the uplink digital signals to at least one of the first radio channel or the second radio channel; and

an electro-optical transceiver configured to:

modulate an optical transmitter using the downlink serial stream; and

convert an uplink optical signal to the serial stream representing the uplink digital signals.

6. The distributed antenna system of claim **1**, wherein the master unit further comprises:

an Ethernet interface configured to transceive operation and maintenance data associated with the master unit and that is separate from the downlink signals and the uplink signals.

7. The distributed antenna system of claim **1**, wherein the remote unit comprises:

an antenna configured to transmit and receive signals using the plurality of wireless protocols and in the plurality of bands;

a remote unit radio channel configured for communicating with the antenna; and

a remote unit controller configured to monitor and control the components of the remote unit.

8. The distributed antenna system of claim **7**, wherein the remote unit radio channel comprises:

a combiner/duplexer configured for being in communication with the antenna and configured to transmit uplink signals to the extension unit and receive downlink signals from a second remote unit or the extension unit.

9. The distributed antenna system of claim **7**, wherein the remote unit further comprises:

an Ethernet interface configured to communicate transceive operation and maintenance data associated with the remote unit and that is separate from the downlink signals and the uplink signals.

10. The distributed antenna system of claim **7**, wherein the remote unit further comprises:

a digital to analog converter; and

a digital pre-distortion unit, the digital pre-distortion unit configured to compare a digitized uplink signal to a delayed downlink signal,

wherein the remote unit is configured to, based on a difference from the comparison in the digital pre-distortion unit, automatically adjust a gain and phase of a signal prior to conversion in the digital to analog converter.

11. The distributed antenna system of claim **1**, wherein the remote unit comprises:

an antenna configured to transmit and receive signals from a mobile unit over the plurality of air interfaces and RF bands;

a remote unit radio channel configured for communicating with the antenna;

a digital switch configured for communicating with the remote unit radio channel and for further communicating with a second remote unit or the master unit; and

a remote unit controller configured to monitor and control the components of the remote unit and digital switch.

12. The distributed antenna system of claim **1**, wherein the extension unit further comprises:

an Ethernet interface configured to transceive operation and maintenance data associated with the extension unit and separate from the downlink signals and the uplink signals.

13. The distributed antenna system of claim **1**, wherein the master unit is a first master unit and the remote unit is a first remote unit, the distributed antenna system further comprising:

a second master unit configured for communicating with at least one of the plurality of base stations;

a second remote unit configured for communicating over a digitally modulated channel with at least one of the second master unit or a third remote unit;

a combiner; and

an antenna,

wherein the first and second master units are configured to use the combiner to transmit using a multi-band RF link over the antenna to communicate with at least one of the plurality of base stations.

14. The distributed antenna system of claim **1**, wherein the master unit comprises:

at least four optical interfaces configured for coupling to fiber optic cables that are adapted to be coupled to a plurality of extension units.

15. The distributed antenna system of claim **1**, wherein the remote unit is further configured to receive RF uplink signals wirelessly and convert the RF uplink signals to uplink digital signals,

wherein the extension unit is further configured to receive the uplink digital signals from the remote unit over the second fiber optic cable,

wherein the master unit is further configured to receive the uplink digital signals from the extension unit over the first fiber optic cable, convert the uplink digital signals to the uplink signals to be provided to the plurality of base stations.

16. The distributed antenna system of claim **15**, wherein the first fiber optic cable comprises a first fiber optic cable for carrying downlink digital signals and a second fiber optic cable for carrying uplink digital signals.

17. The distributed antenna system of claim **1**, wherein the master unit comprises a resampler configured to reduce a size of the digitized downlink signals by re-sampling the digitized downlink signals.

18. The distributed antenna system of claim **1**, wherein the master unit comprises an interface that is configured to send the uplink signals to at least one of the plurality of base stations by a third fiber optic cable and to receive the downlink signals from the at least one of the plurality of base stations by a fourth fiber optic cable.

19. The distributed antenna system of claim **18**, wherein a format of the uplink signals and the downlink signals comprises a Common Public Radio Interface (CPRI) or an Open Base Station Architecture Initiative (OBSAI) link.

20. The distributed antenna system of claim **1**, wherein the master unit is configured to separately digitize each of the downlink signals,

wherein the master unit is configured to digitally sum uplink digital signals received from a plurality of remote units,

wherein the remote unit is configured to process signals associated with the plurality of bands.

21. A method, comprising:

receiving, by a master unit of a distributed antenna system, downlink signals from a plurality of base stations, the downlink signals being associated with a plurality of wireless protocols and a plurality of bands, wherein receiving downlink signals from the plurality of base stations comprises receiving, by circuitry comprising a

duplexer of a first radio channel, downlink signals associated with a first band of the plurality of bands from the plurality of base stations;

outputting the downlink signals as digitized downlink signals to an extension unit over a first fiber optic cable;

transmitting uplink signals to the plurality of base stations comprising transmitting, by the circuitry, the uplink signals associated with the first band to the plurality of base stations;

responsive to transmitting the uplink signals associated with a second band to the plurality of base stations, opening and protecting, by switch of a second radio channel, an RF downconverter in the second radio channel; and

providing, by a controller, switch control timing for controlling operation of the switch.

22. The method of claim **21**, further comprising:

receiving, by a remote unit, the downlink signals from the extension unit over a second fiber optic cable;

converting the downlink signals to RF downlink signals;

wirelessly transmitting the RF downlink signals;

receiving by a second remote unit at least a subset of the downlink signals from the remote unit over a third fiber optic cable;

converting the subset of the downlink signals to second RF downlink signals; and

wirelessly transmitting the second RF downlink signals.

23. The method of claim **21**, further comprising:

receiving RF uplink signals wirelessly by a remote unit;

converting the RF uplink signals to uplink digital signals;

transmitting the uplink digital signals to the extension unit over a second fiber optic cable;

receiving by the master unit the uplink digital signals from the extension unit over the first fiber optic cable; and

converting the uplink digital signals to the uplink signals.

24. The method of claim **23**, wherein transmitting the uplink digital signals to the extension unit over the second fiber optic cable comprises:

receiving second uplink digital signals from a second remote unit over a third fiber optic cable;

combining the second uplink digital signals with the uplink digital signals converted from the RF uplink signals received by the remote unit to generate combined uplink digital signals; and

transmitting the combined uplink digital signals to the extension unit over the second fiber optic cable,

wherein receiving by the master unit the uplink digital signals from the extension unit over the first fiber optic cable comprises receiving the combined uplink digital signals,

wherein converting the uplink digital signals to uplink signals comprises converting the combined uplink digital signals to the uplink signals.

25. The method of claim **21**, further comprising:

separately digitizing each of the downlink signals to generate the digitized downlink signals;

re-sampling by the master unit the digitized downlink signals to reduce a size of the digitized downlink signals; and

digitally summing uplink digital signals received from a plurality of remote units.

26. The method of claim **21**,

wherein outputting the downlink signals as the digitized downlink signals to the extension unit over the first fiber optic cable comprises:

(A) arranging, by a formatter, the digitized downlink signals and an Ethernet signal into frames;

(B) converting the framed downlink signals into a downlink serial stream; and

(C) modulating, by an electro-optical transceiver, an optical transmitter using the downlink serial stream,

wherein the method further comprises:

(A) converting, by the electro-optical transceiver, an uplink optical signal to a serial stream representing uplink digital signals from a remote unit;

(B) phaselocking to the serial stream;

(C) generating a bit clock that is phaselocked to a data rate of the serial stream;

(D) converting the serial stream to a parallel uplink digital data stream;

(E) splitting the parallel uplink digital data stream into the plurality of bands of uplink digital signals; and

(F) routing each of the plurality of bands of uplink digital signals to an appropriate one of the first radio channel or the second radio channel.

27. A distributed antenna system, comprising:

a master unit configured for sending uplink signals to a plurality of base stations, the uplink signals being associated with a plurality of wireless protocols and a plurality of bands, wherein the master unit is configured for receiving the uplink signals as digitized uplink signals from an extension unit over a first fiber optic cable;

a first remote unit configured to generate first digitized uplink signals by digitizing first RF uplink signals wirelessly received by the first remote unit, the first remote unit being configured to provide the first digitized uplink signals to the extension unit, the first remote unit comprising:

a digital to analog converter; and

a digital pre-distortion unit, the digital pre-distortion unit configured to compare the first digitized uplink signals to a delayed downlink signal, wherein the remote unit is configured to, based on a difference from the comparison in the digital pre-distortion unit, automatically adjust a gain and phase of a signal prior to conversion in the digital to analog converter; and

a second remote unit configured to generate second digitized uplink signals by digitizing second RF uplink signals wirelessly received by the second remote unit, the second remote unit being configured to provide the second digitized uplink signals to the extension unit,

the extension unit configured to generate the digitized uplink signals by summing the first digitized uplink signals and the second digitized uplink signals.

28. The distributed antenna system of claim **27**, wherein the master unit comprises:

a first radio channel having circuitry comprising a duplexer, the circuitry being configured to (i) receive downlink signals associated with a first band of the plurality of bands from the plurality of base stations and (ii) transmit the uplink signals associated with the first band to the plurality of base stations;

a second radio channel comprising a switch configured for, responsive to transmitting the uplink signals associated with a second band to the plurality of base stations, opening and protecting an RF downconverter in the second radio channel; and

a controller configured for providing switch control timing for controlling operation of the switch.

29. The distributed antenna system of claim **1**, wherein the extension unit is a switch.

* * * * *