UNITED STATES PATENT AND TRADEMARK OFFICE

---

BEFORE THE PATENT TRIAL AND APPEAL BOARD

---

COMMSCOPE TECHNOLOGIES, LLC,
Petitioner,

v.

DALI WIRELESS, INC.,
Patent Owner.

---

Case IPR2020-01473
Patent 10,080,178

---

**PATENT OWNER'S PRELIMINARY RESPONSE**
**UNDER 35 U.S.C. §§ 311-19 AND 37 C.F.R. § 41.100, ET SEQ.**

## TABLE OF CONTENTS

**I. INTRODUCTION ..... 1**

**II. THE '178 PATENT DISCLOSES A *NOVEL* RECONFIGURABLE DISTRIBUTED ANTENNA SYSTEM (DAS) ..... 4**

A. Overview ..... 4

B. Challenged Claims ..... 7

C. Prosecution History ..... 9

1. *Wu*, *Oh*, *Sabat '426* and *CPRI* were submitted in an IDS and considered by the Examiner ..... 9

2. First Office Action (6/5/17) ..... 9

3. Final Office Action (9/20/17) ..... 10

4. Notice of Allowance (2/21/18) and withdrawal of issuance to submit the IPR2018-00571 Petition and expert declaration relying on *Wu* and *Oh* in an IDS ..... 10

5. Notice of Allowance (9/5/18) ..... 12

**III. THE ASSERTED REFERENCES ..... 12**

A. Primary References ..... 12

1. *Wu* (Ex. 1005) ..... 12

2. *Oh* (Ex. 1023) ..... 15

B. Secondary References ..... 17

1. *Sabat '426* (Ex. 1040) and *Sabat '552* (Ex. 1011) ..... 17

2. *CPRI* (Ex. 1006) ..... 18

3. *OBSAI* (Exs. 1007, 1008) ..... 18

C. Reliance on IPR2018-00571 as Evidentiary Support is Improper ..... 18

**IV. CLAIM CONSTRUCTION ..... 21**

A. Level of Ordinary Skill in the Art ..... 22

B. "Host Unit" (Claims 1, 10, 15, 21).....22

1. "Host Unit" means "a digital access unit that manages communications between an operator network and one or more remote radio units" .....23

2. Petitioner provides no support for its construction of "host unit" and takes a different position in the parallel Delaware proceeding .....24

C. "Dynamically Change" and "Dynamically Changes" (Claims 2-5, 16-17) .....25

1. "Dynamically change"/"dynamically changes" means "adaptively change" .....25

2. Petitioner's requirement of "change instantly" is not supported in the '178 patent or claims.....26

**V. THE BOARD SHOULD REJECT THE PETITION UNDER 35 U.S.C. § 325(D) BECAUSE THE SAME PRIOR ART IS USED AS WAS PREVIOUSLY BEFORE THE OFFICE.....28**

A. Factors (a)-(d) Justify Denying Institution.....29

1. *Wu*, *Oh*, *Sabat '426*, and *CPRI* were previously presented in an IDS during examination of the '178 Patent.....29

2. *Wu*, *Oh*, *Sabat '426*, and *CPRI* were evaluated by the Examiner in the first office action .....30

3. Petitioner relies on *Wu* and *Oh* to allege the exact limitations that the Examiner previously found missing in the cited references.....30

4. Asserted References are Cumulative in Nature .....31

5. The Board Has Supported § 325(d) Denial Based on Previously Presented Art in an IDS .....33

B. Factors (e) and (f) Justify Denying Institution.....35

**VI. THE PETITION FAILS TO SHOW THAT GROUNDS 1-7 HAVE A REASONABLE LIKELIHOOD OF SUCCESS.....37**

A. Grounds 1-5: *Wu* Fails to Disclose Each and Every Element to Support Anticipation or Obviousness of the Challenged Claims ..... 37

1. Ground 1: *Wu* fails to anticipate claims 1-25 ..... 38

2. Ground 2: *Wu* alone or in view of *Sabat '426* fails to render claims 1-25 obvious ..... 49

3. Ground 3: *Wu* in view of OBSAI fails to render claims 8, 11, 19, 21 and 23-25 0obvious ..... 51

4. Ground 4: *Wu* in view of *CPRI* fails to render claims 8-9, 11, and 19-25 obvious ..... 52

5. Ground 5: *Wu* in view of *Sabat '552* fails to render claims 26-30 obvious ..... 53

B. Grounds 6-7: *Oh* Fails to Support Anticipation or Obviousness of Any Challenged Claim ..... 55

1. Ground 6: *Oh* fails to anticipate claims 1-8, 10-11, 13, 15-19, 21, and 23-24 ..... 56

2. Ground 7: *Oh* in view *Wu* fails to render claims 1-8, 10-11, 13, 15-19, 21, and 23-24 obvious ..... 60

**VII. CONCLUSION ..... 62**

## TABLE OF AUTHORITIES

## CASES

*Abbott Labs. v. Dey, L.P.*,
287 F.3d 1097, 1104 (Fed. Cir. 2002).....21

*Adaptics Ltd. v. Perfect Co.*,
IPR2018-01596, Paper 20 at 16 (PTAB Dec. Mar 6, 2019).....51

*Advanced Bionics*, *LLC v. Med-El Elektromedizinische Geräte GMBH*,
IPR2019-01469, Paper 6 at 8 (PTAB Feb. 13, 2020) (precedential)..... 29, 30, 36

*Andersen Corp. v. Fiber Composites*, LLC,
474 F.3d 1361, 1369 (Fed. Cir. 2007).....28

*Arthrex, Inc. v. Smith & Nephew, Inc.*,
941 F.3d 1320 (Fed. Cir. 2019)..... vii, 3, 19, 21, 38

*Becton*, *Dickinson & Co. v. B. Braun Melsungen AG*,
IPR2017-01586, Paper 8 at 17-18 (PTAB Dec. 15, 2017) (precedential).... 30, 36

*Bio-Rad Lab, Inc. v. 10X Genomics, Inc.*,
IPR2019-00566, Paper 21 at 11 (PTAB Jul. 22, 2019)
(denying Petition under § 325(d)).....37

*ClearH20, Inc. v. CEVA Animal Health Inc.*,
IPR2020-00039, Paper No. 21 at 6 (PTAB Mar. 18, 2020) ..... 22, 30

*Dali Wireless Inc. v. CommScope Techs LLC*,
No. 20-1045, ECF No. 25 (Fed. Cir. Apr. 29, 2020)..... vii

*Durning v. Citibank, N.A.*,
950 F.2d 1419, 1424 n.2 (9th Cir. 1991))
(citing *O'Connor v. Donaldson*, 422 U.S. 563, 577 n.12 (1975) .....20

*e.Digital Corp. v. Futurewei Techs., Inc.*,
772 F.3d 723, 726-27 (Fed. Cir. 2014)
(citing *Texas Digital Sys., Inc. v. Telegenix, Inc.*, 308 F.3d 1193 (Fed. Cir. 2002).....22

Federal Circuit and the U.S. Supreme Court.
Ex. 2013 (*Ex Parte Hammad*, Appeal 2017-004004 (P.T.A.B. July 6, 2018).....21

*KSR Int'l Co. v. Teleflex Inc.*, 550 U.S. 398, 418 (2007) .....51

*Net MoneyIN, Inc. v. VeriSign, Inc.*,
545 F.3d 1359, 1371 (Fed. Cir. 2008)..... 39, 41, 51

*Oxford Nanopore Techs., Inc. v. Pacific Biosciences of Cal., Inc.*,
IPR2018-01792, Paper 10 at 18 (PTAB Mar. 26, 2019) .....41

*Phillips v. AWH Corp.*,
415 F.3d 1303 (Fed. Cir. 2005) (en banc).....23

*PNC Bank Nat'l Assoc. v. Secure Axcess, LLC*,
138 S. Ct. 1982 (2018) .....21

*RF De., Inc. v. Pac. Keystone Techs., Inc.*,
326 F.3d 1255, 1263 (Fed. Cir. 2003).....28

*Roku, Inc. v. Universal Elecs., Inc.*, IPR2019-01619, Paper 11 at 11-12
(PTAB Apr. 2, 2020)..... 35, 36

*W.Y. Moberly, Inc. v. United States*,
924 F.2d 232, 236 (Fed. Cir. 1991).....20

**STATUTES**

35 U.S.C. § 102 ..... 9, 39

35 U.S.C. § 103 ..... 9, 10, 51

35 U.S.C. § 312(a)(3).....51

35 U.S.C. § 325(d) ..... 1, 22, 23, 29, 30, 33, 34, 35, 36, 38

35 U.S.C § 314(a) .....52

**RULES**

37 C.F.R. § 42.100(b) .....23

37 C.F.R. § 42.104(b)(4).....39

37 C.F.R. § 42.108(c).....1

MPEP § 1302 .....32

MPEP §§ 609, 707 .....31

**EXHIBIT LIST**

| Exhibit No. | Exhibit Description |
|---|---|
| 2002 | File History of U.S. Patent No. 10,080,178 ("'178 File History") |
| 2003 | General Order in Cases Remanded Under *Arthrex, Inc. v. Smith & Nephew, Inc.*, 941 F.3d 1320 (Fed. Cir. 2019) |
| 2004 | U.S. Provisional Application No. 61/382,836 |
| 2005 | U.S. Patent Appl. Publ. No. 2005/0152695 ("*Sulzberger*") |
| 2006 | U.S. Patent No. 6,657,993 ("*Casanova*") |
| 2007 | U.S. Patent Appl. Publ. No. 2010/0238904 ("*Zhang*") |
| 2008 | U.S. Patent No. 8,855,489 ("*Boldi*") |
| 2009 | Dali's Opening Claim Construction in District Court of Delaware (C.A. No. 19-952-MN) |
| 2010 | Dali's Reply Claim Construction Brief in District Court of Delaware (C.A. No. 19-1952-MN) |
| 2011 | Final Joint Claim Construction Chart (C.A. No. 19-952-MN) |
| 2012 | Federal Circuit Order in *Dali Wireless Inc. v. CommScope Techs LLC*, No. 20-1045, ECF No. 25 (Fed. Cir. Apr. 29, 2020) |
| 2013 | Decision on Appeal in *Ex Parte Hammad*, Appeal 2017-004004 (PTAB July 6, 2018) |

## I. INTRODUCTION

Petitioner has failed to demonstrate a reasonable likelihood that any of the challenged claims 1-30 of U.S. Patent No. 10,080,178 ("'178 patent") (Ex. 1001) are unpatentable as required under 37 C.F.R. § 42.108(c). Indeed, for both substantive and procedural reasons, the Board should deny institution on Grounds 1-7.

*First*, the Board should exercise its discretion and deny institution under 35 U.S.C. § 325(d). Petitioner relies on two primary references, *Wu* and *Oh* (Exs. 1005, 1023) that were previously presented to the Office in the 5/12/17 IDS at 3-4. (Ex. 2002, '178 File History). Indeed, Petitioner acknowledges that *Wu* and *Oh* are cited references, but Petitioner fails to articulate *any error* by the Examiner in considering *Wu* and *Oh* for the '178 patent claims. Pet. at 13-14.

Most notably, after considering *Wu* and *Oh*, among others, the Examiner indicated that "**no prior art reference or <u>combination</u> of prior art references disclose or suggest** the combination of limitations specified in the independent claims":

> 'the host unit is configurable to send digital representations of a *second set of downlink channel signals* to the first remote unit at a *second point in time*, the second set of downlink channel signals *for transmission at the antenna of the first remote unit*;' and 'wherein a number of downlink channel signals in the *first set of downlink channel signals is*

*different from a number of downlink channel signals in the second set of downlink channel signals*.'

Ex. 2002 at 9/5/18 NOA, 6-7 (emphasis added). In Grounds 1-7, Petitioner relies on *Wu* and *Oh* that were previously presented to allege the **exact limitations** that **overlaps** with what the Examiner found missing in the cited references.

*Second*, Petitioner's redux of *Wu* and *Oh* should also be rejected for failing to "specify" exactly where the above missing limitations are present in *Wu* and *Oh.* These limitations are directed to important features of the '178 patent that changes the number or sets of downlink channel signals for transmission at a digital remote unit ("DRU") at different points in time. Ex. 1001 at Abstract, 14:14-27. For example, in the '178 patent, a host unit or digital access unit (DAU) is configurable to send digital representations of different sets of downlink channel signals to a first remote unit at a first time and a second time. And the first remote unit has configurable settings that enable the first and second sets of downlink channel signals for transmission at an antenna of the first remote unit. *Id*. at 5:62-6:25.

Contrary to these limitations and others, a host unit or hub, in *Wu* and *Oh*, simply passes a data stream or traffic to a radio unit based on a routing policy or mapping table. Indeed, the alleged host unit in *Wu* and *Oh* **is not configurable** to send **different sets and different numbers** of downlink channel signals to a first

remote unit at a first time and second time for transmission at an antenna of the first radio unit and, therefore, *Wu* and *Oh* cannot support anticipation or obviousness.

*Third*, Petitioner's reliance on a Final Decision dated August 12, 2019 in IPR2018-00571 ("571 IPR") to a different patent and claims, namely U.S. Patent No. 9,531,473 ("'473 patent"), is improper because that Final Decision has been *vacated* and remanded in view of *Arthrex, Inc. v. Smith & Nephew, Inc.*, 941 F.3d 1320 (Fed. Cir. 2019), and further proceedings held in administrative abeyance pending Supreme Court review of *Arthrex*. (Ex. 2002) (General Order, 5). And the '473 patent is not a formally related application to the '178 patent. Ex. 1001 at 1:5-14. Moreover, Petitioner's insinuation that Patent Owner "concealed" the 571 IPR regarding *Wu* and *Oh* is completely false and misrepresents the record.

The Final Decision dated August 12, 2019, for the 571 IPR issued nearly a year after the '178 patent was granted on September 18, 2018. During prosecution of the '178 patent, Patent Owner withdrew the 2/18/18 NOA and filed the 5/1/18 RCE along with the 5/1/18 IDS to disclose the 571 IPR Petition and the accompanying expert declaration. Ex. 2001 at 5/1/18 IDS, 3. Because Petitioner failed to point out *any error* by the Examiner after consideration of the 571 IPR petition, *Wu*, and *Oh*, the Board should defer to the Examiner's conclusion that **no prior art or combination** discloses or suggests the '178 patent claims.

## II. THE ’178 PATENT DISCLOSES A *NOVEL* RECONFIGURABLE DISTRIBUTED ANTENNA SYSTEM (DAS)

### A. Overview

The ’178 patent claims the benefit of U.S. Provisional Appl. No. 61/439,940 filed on February 7, 2011 (Ex. 2004). The ’178 patent discloses a *novel* reconfigurable distributed antenna system (“DAS”) that provides “a high degree of flexibility to manage, control, re-configure, enhance and facilitate the radio resource efficiency, usage and overall performance of the distributed wireless network.” Ex. 1001 at Abstract, 4:24-28. The ’178 patent addresses efficiency and radio capacity issues by having a DAS that is adaptively reconfigurable to change the number or sets of downlink signals for transmission at an antenna of a specific digital remote unit at different points in time. *Id*. at 14:14-27, 15:17-32, 15:48-61, 16:33-43, 17:18-18:3.

For example, referring to FIG. 1 (reproduced below), a channelized downlink transport system is shown in DAS 100. In DAS 100, a digital access unit (“DAU 105”) or “host unit” receives multiple sources of RF signals or composite signals from base stations 110A-*p* and outputs independently serialized and parallel data streams on subsets (A, B) of downlink channels. *Id*. at 4:28-36, 5:1-3. In this example, DAU 105 propagates downlink channel subset A (A, B, C, D) in a clockwise direction and subset B (E, F, G, H) in a counter-clockwise direction to a

plurality of digital remote units ("DRUs 125A-*k*"). *Id*. at 5:17-28. The DAU is "able to automatically and adaptively **re-allocate data transport resources** on the clockwise direction of the ring and on the counter-clockwise direction of the ring to **maximize overall transport capacity**." *Id*. at 8:18-20 (emphasis added). Heuristic and time-bounded algorithms can be used to schedule the sets of channels output in DAS 100 based on channel bandwidth constraints. *Id*. at 8:51-9:17.

| '178 Patent (Ex.1001) FIG. 1 |
| --- |
| 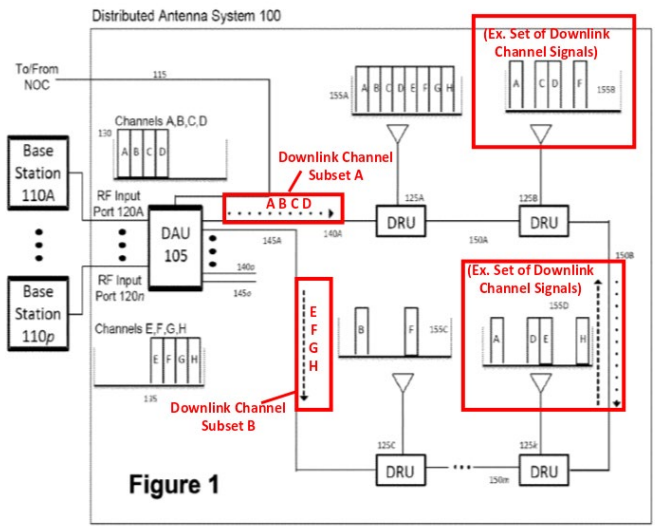 |



An important function performed by DAU 105 is that "the **number of channels [sets] received at each DRU is assigned by the DAU** and need not be equal, adjacent or sequential, but instead will typically be any **configuration that optimizes network utilization**. *Id*. at 5:25-28 (emphasis added). One or more "carriers" can exist in each channel, and a DRU "may receive **a channel**

**comprising a signal containing two or more carriers**. *Id*. at 5:53-54 (emphasis added).

Referring to FIGS. 7 and 1, each DRU includes settings that are configured such that a specific set of downlink channels signals are output at its antenna. For example, referring to DRU 125B, the '178 patent discloses that:

> As with DRU 125A, the **software settings with DRU 125B** are configured either manually or automatically such that **Carriers A, C, D and F are present in the downlink output signal 155E <u>at</u> <u>the</u> <u>antenna</u> <u>port</u> of DRU 125B**.

*Id*. at 6:29-32 (emphasis added).

| '178 Patent (Ex.1001) FIG. 7, FIG. 1 | |
|---|---|
| 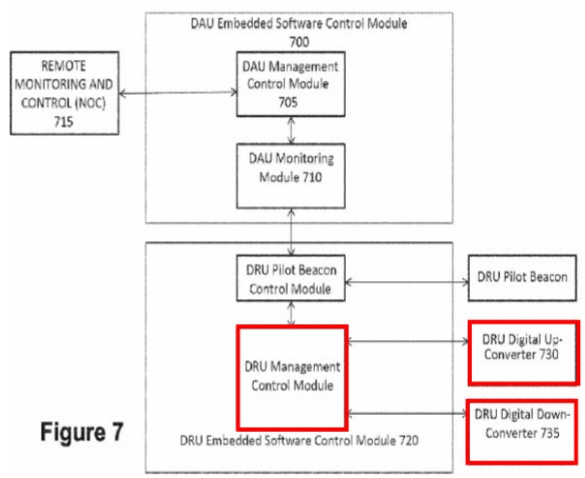  | 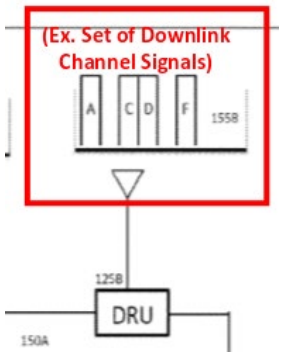  |

Specifically, for each DRU (*e.g.*, DRU 125B), radio capacity can be set higher or lower by the DAU remotely turning on or off gain control parameters within digital up converters ("DUC") for output of individual carriers:

> The **capacity of DRU 125B is set** to a much lower value than DRU 125A by virtue of its **specific channel settings** as controlled by DAU 105. The individual Digital Remote Units have integrated frequency selective DUCs and DDCs with gain control for each carrier. **The DAU's can remotely turn on and off individual carriers via the gain control parameters**.

*Id*. at 6:33-42 (emphasis added). In this way, the DUCs located within the DRU can be "dynamically reconfigured as the result of commands from the NOC to transport from the DAU input **to any specific DRU output** any specific narrow frequency band or bands, **RF carriers or RF channels** which are available at the respective RF input port of either DAU." *Id*. at 7:16-20 (emphasis added).

**B. Challenged Claims**

Petitioner challenges claims 1-30 of the '178 patent, which includes independent claims 1, 10, 15, 21, and 26. Claim 1 is representative and reads:

> 1. A host unit for use in the transport of wireless communications, comprising:
>
> at least one interface to communicatively couple the host unit to at least one signal source;

at least one interface to communicatively couple the host unit to a plurality of remote units, including at least a first remote unit;

wherein the host unit is configured to send digital representations of the plurality of downlink channels to the plurality of remote units;

wherein the host unit is configurable to send digital representation of a first set of downlink channel signals to the first remote unit at a first point in time, the first set of downlink channel signals for transmission at an antenna of the first remote unit;

wherein the host unit is configurable to send digital representations of a second set of downlink channel signals to the first remote unit at a second point in time, the second set of downlink channel signals for transmission at the antenna of the first remote unit; and

wherein a number of downlink channel signals in the first set of downlink channel signals is different from a number of downlink channel signals in the second set of downlink channel signals.

Ex. 1001 at 14:2-27. Claims 2-9 depend on claim 1. Claims 10-14 recite a system for transporting wireless communications; claims 15-20 recite a method for providing digital signals in a DAS; and claims 21-25 and 26-30 recite a host unit for use in the transport of wireless communications.

### C. Prosecution History

#### 1. *Wu*, *Oh*, *Sabat '426* and *CPRI* were submitted in an IDS and considered by the Examiner

Patent Owner previously presented *Wu* (Ex. 1005), *Oh* (Ex. 1023), *Sabat '426* (Ex. 1040), and *CPRI* (Ex. 1006) to the Office in the 5/12/17 IDS at 3-4. (Ex. 2002, '178 File History). These references were submitted to the Office prior to the 6/5/17 first Office Action ("OA"). The Examiner signed (on 5/25/17) and considered the 5/12/17 IDS listing the above asserted references in the 6/5/17 OA at 2.

#### 2. First Office Action (6/5/17)

In the 6/15/17 OA, along with considering and evaluating *Wu*, *Oh*, *Sabat '426*, and *CPRI*, the Examiner alleged a double-patenting rejection to a commonly-owned U.S. Patent No. 8,737,300. The Examiner also alleged 35 U.S.C. §§102, 103 rejections based on U.S. Patent Appl. Publ. No. 2005/0152695 ("*Sulzberger*") (Ex. 2005), and *Sulzberger* in view of U.S. Patent No. 6,657,993 ("*Casanova*") (Ex. 2006) and U.S. Patent Appl. Publ. No. 2010/0238904 ("*Zhang*") (Ex. 2007). *Sulzberger*, in FIG. 2, discloses multiple radio heads (RH1 and RH2) that are connected to a baseband unit in two ring loops, and carriers can be assigned to ring directions in the loops. Ex. 2005 at [0018]. In the 9/5/17 Amendment, Patent Owner distinguished over *Sulzberger* by pointing out, *inter alia*, that *Sulzberger* does not teach that the number of downlink channel signals to RH1 and RH2 can be changed,

or a different number of downlink channel signals in a first set and second set of downlink channel signals to RH1 and RH2. Ex. 2002 at 9/5/17 Amendment, 10.

3. Final Office Action (9/20/17)

In response to the 9/5/17 Amendment, in the 9/29/17 Final OA at 8-9, the Examiner maintained the double-patenting rejection and submitted a new § 103 rejection based on *Sulzberger* in view of U.S. Patent No. 8,855,489 ("*Boldi*") (Ex. 2008). In response to the '9/29/17 Final OA, Patent Owner submitted the 12/21/17 RCE with accompanying amendment and argued that *Boldi* "does not send a first number of sub-data streams for transmission at an antenna of a first node and a different number of sub-data steams **for transmission at the antenna of the first node**." Ex. 2002, 12/21/17 RCE at 8 (emphasis added). Specifically, *Boldi* discloses a first node that radiates only a first downlink radio signal having a first sub-data stream—not different sets or number of downlink radio signals. Ex. 2008 at 4:1-11. *Boldi* also discloses that each sub-data stream may "include respective identification data for associating the sub-data stream to a corresponding node." *Id*. at 4:35-38.

4. Notice of Allowance (2/21/18) and withdrawal of issuance to submit the IPR2018-00571 Petition and expert declaration relying on *Wu* and *Oh* in an IDS

In response to the 2/21/17 RCE and amendment and 1/24/18 Terminal Disclaimer, the Examiner allowed the claims and gave reasons for allowance in the 2/1/18 NOA that the prior art did not disclose or suggest limitations directed to

different sets and different number of downlink channels signals to a first remote at different points in time for transmission at the antenna of the first remote unit. Ex. 2002 at 2/1/18 NOA, 3-4. On the same date of the 2/1/18 NOA, Petitioner filed the IPR2018-00571 Petition ("571 Petition") involving an unrelated patent also owned by Patent Owner, namely the '473 patent. Because the 571 Petition and accompanying Acampora expert declaration ("Acompora Decl.") relied on *Wu* and *Oh*, Patent Owner withdrew issuance of the '178 patent, and filed the 5/1/18 IDS along with an RCE to submit the 571 Petition and Acampora Decl. for evaluation by the Examiner. Ex. 2002 at 5/1/18 IDS at 3. In doing so, Patent Owner sought substantive examination of the arguments presented in the 571 Petition before the '178 patent issued. Furthermore, on May 7, 2018, Patent Owner had a telephone conference with the Examiner to specifically discuss the 5/1/18 IDS to ensure that the claims of the '178 patent were patentable in view of the 571 Petition. Ex. 2002 at 5/16/18 Applicant-Initiated Interview Summary. The Examiner signed (on 5/8/18) the 5/1/18 IDS and fully considered the 571 Petition and accompanying Acampora Decl. in a subsequent 9/5/18 NOA.

Patent Owner presents these relevant facts from the prosecution of the '178 patent to address Petitioner's unsupported assertion here that Patent Owner purportedly "concealed" the 571 Petition from the Examiner. Indeed, at no point during the prosecution of the '178 patent did Patent Owner attempt to obscure the

substance of the 571 Petition. On the contrary, Patent Owner actively brought the 571 Petition before the Examiner on Patent Owner's own initiative and engaged the Examiner to consider and overcome it.

5. Notice of Allowance (9/5/18)

In the 9/5/18 NOA, after fully considering all the cited references—including each of *Wu*, *Oh*, *Sabat '426*, *CPRI* and the 571 Petition—the Examiner repeated the reasons for allowance in the 2/1/18 NOA that "**no prior art reference or a combination** of prior art references disclose or suggest" the combination of limitations specified in the independent claims including:

- the host unit is configurable to send digital representations of a *second set* of downlink channel signals to the first remote unit at a *second point in time*, the *second set* of downlink channel signals *for transmission at the antenna of the first remote unit*;
- wherein a *number* of downlink channel signals *in the first set* of downlink channel signals *is different from a number* of downlink channel signals *in the second set* of downlink channel signals.

Ex. 2002 at 9/5/18 NOA, 6-7 (emphasis added). The '178 patent issued on September 18, 2018.

## III. THE ASSERTED REFERENCES

### A. Primary References

1. *Wu* (Ex. 1005)

*Wu* is relied upon as a primary reference in Grounds 1-5 and 7. *Wu* is a cited

reference and was fully evaluated during prosecution of the ’178 patent. *See* Section II.C. *Wu*, in FIG. 1 (reproduced below), discloses a carrier distribution system 100 having a base transceiver station (BTS) 140 that transmits and receives digitized signals from carrier channels in on or more bands to host units 130 that “**relay digitized signals** between BTS 140 and remote transceiver units (RTUs) 110 within the remote cell regions 120.” *Wu* at [0030] (emphasis added).

*Wu* (Ex.1001) FIG. 1

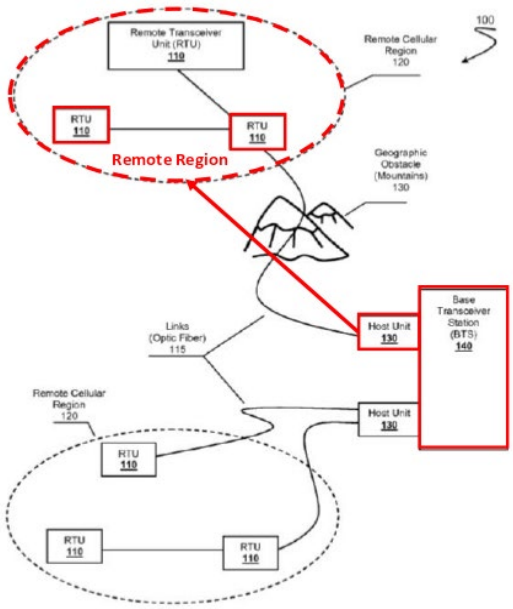


Referring to FIGS. 2-3 (reproduced below), *Wu* describes that the BTS 140 has two parts, a transceiver (multi-band) 260 and matrix switch (band combiner-splitter) 250. Ex. 1005 at [0035]. In *Wu*, the host units 230 are described as separate

from BTS 140. Transceiver 260 receives and transmits signals within a plurality of frequency bands 263A-N, each frequency band comprising multiple analog channels 270. *Id*. Matrix switch 250 receives and "**routes analog channels 270 to appropriate host units 230** according to a **policy 255** for distribution to remote regions or RTUs." *Id*. at [0038]. Host units 230 digitizes and serializes received analog signals 270 as a stream of digitized channels 270 (1 through 12) and relays the stream of digitized channels 270 to RTU 210 that outputs the same stream of digitized channels 270 on boosters 383 and 385. *Id*. at [0049].

| *Wu* (Ex.1005) FIGS. 2, 3 | |
|---|---|
| 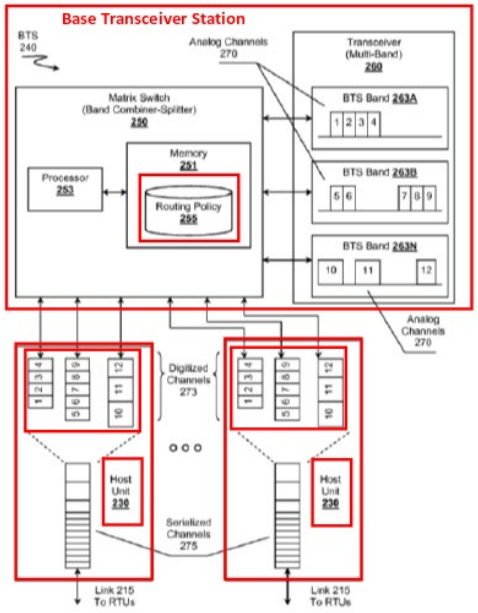  Figure 2 | 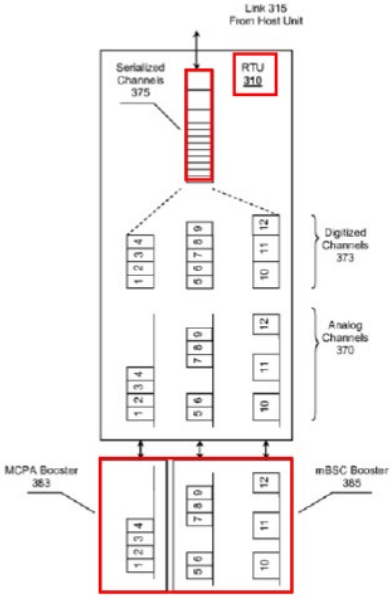  Figure 3 |

Referring to FIG. 4 (reproduced below), within a remote region 120, RTUs

410 can be arranged into different carrier channel distribution configurations such as unicast, simulcast, and cascaded configurations. In these configurations, host units 410 send the *same* digitized streams to each of the RTUs 410. *Id*. at [0051]. In other words, host units 430 simply relay digitized streams from BTS 240 to RTU 410, which output the same digitized streams at respective boosters.

| *Wu* (Ex.1005) FIG. 4 |
| --- |
| 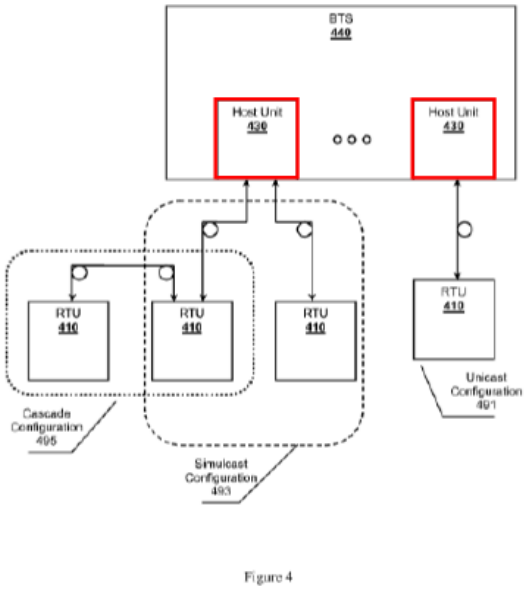  |

2. <u>*Oh* (Ex. 1023)</u>

*Oh* is relied upon as the primary reference in Ground 6. *Oh* is a cited reference and was fully evaluated during prosecution of the '178 patent. *See* Section II.C. *Oh*, in FIG. 1 (reproduced below), discloses a communication system for routing communication traffic between base stations BTS 18 in a radio access network

(RAN) 12 with DAS antenna units 28, 30 and 32 using a DAS hub 26 at the headend. Ex. 1023 at 2:34-36, 4:33-5:13. At the headend, the DAS hub 26 stores mapping data 46 used to correlate base station coverage segments to IP addresses of DAS antenna units. *Id*. at 34-48. According to *Oh*, a coverage segment "may be a cell, cell sector, or other coverage area of the RAN, defined by a directional radiation pattern *from a BTS or the RAN*." *Id*. at 4:50-53. The DAS hub 26 uses the mapping data to route traffic between BTS 18 and antenna units 28, 30 and 32.

*Oh* (Ex.1023) FIG. 1

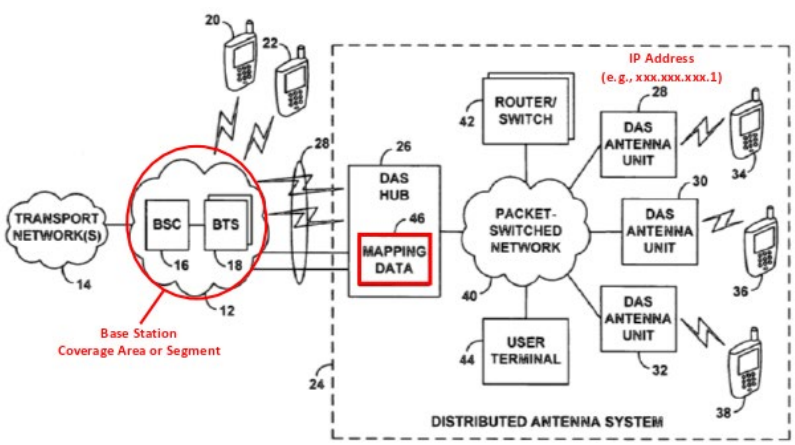


FIG. 1

Specifically, referring to FIG. 2 (reproduced below), *Oh* discloses DAS mapping data stored in a table at the headend in the DAS hub 26. According to *Oh*, the DAS hub 26 will maintain in data storage a set of mapping data 46 that serves to correlate one or more RAN coverage segments of RAN 12 with one or more IP

addresses of the various DAS antenna units in DAS 24. As shown below in the mapping table, when the DAS hub 26 receives incoming traffic in a particular RAN coverage segment, the DAS hub 26 consults the mapping data 46 to determine one or more DAS antenna unit IP addresses to which it should route that incoming traffic via packet-switched network 40. *Id*. at 7:35-47. As shown, each DAS antenna unit has an IP address corresponding to a coverage segment—*e.g.*, Coverage Segment B corresponds to IP address xxx.xxx.xxx.5.

*Oh* (Ex.1023) FIG. 2

| DAS MAPPING DATA | |
|---|---|
| RAN COVERAGE SEGMENT(S) | DAS ANTENNA UNIT IP ADDRESS(ES) |
| A | xxx.xxx.xxx.1, xxx.xxx.xxx.2, xxx.xxx.xxx.3, xxx.xxx.xxx.6 |
| B | xxx.xxx.xxx.5 |
| C | xxx.xxx.xxx.4 |

FIG. 2

**B. Secondary References**

1. <u>*Sabat '426* (Ex. 1040) and *Sabat '552* (Ex. 1011)</u>

*Sabat '426* is relied upon as a secondary reference for Ground 2. *Sabat '426 is* a cited reference and was fully evaluated during the prosecution of the '178 patent. *See* Section II.C. *Sabat '426* discloses a digital distributed wireless communication

system. Ex. 1040 at [0015]. *Sabat '552* is relied upon as a secondary reference for Ground 5. *Sabat '552* discloses a signal distribution system. Ex. 1011 at 2:46-58.

2. *CPRI* (Ex. 1006)

*CPRI* is relied upon as a secondary reference in Ground 4, which refers to the Common Public Radio Interface (CPRI) Specification V4.0. CPRI is a cited reference and was fully evaluated during prosecution of the '178 patent. *See* Section II.C.

3. *OBSAI* (Exs. 1007, 1008)

*OBSAI* is relied upon as a secondary reference in Ground 3, which refers to the Reference Point 3 Specification Version 3.1 (Ex. 1007) and BTS System Reference Document Version 2.0 (Ex. 1008).

**C. Reliance on IPR2018-00571 as Evidentiary Support is Improper**

In Grounds 1-7, Petitioner relies extensively on the Final Decision (Ex. 1037) to the 571 IPR involving the '473 patent (Ex. 1040). Petitioner's reliance on the Final Decision for evidentiary support here is improper.

*First*, the Final Decision has been *vacated*, remanded, and held in administrative abeyance pending Supreme Court review of *Arthrex*. As a result, the Final Decision on which Petitioner relies extensively is not binding on the Board. Following the Federal Circuit's 2019 ruling in *Arthrex*, and without objection by Petitioner, the Federal Circuit issued an order in connection with Patent Owner's

appeal of the 571 IPR ruling that "[t]he Patent Trial and Appeal Board's decision is vacated, and the case is remanded to the Board for proceedings consistent with this court's decision in *Arthrex*." Ex. 2012 (*Dali Wireless Inc. v. CommScope Techs LLC*, No. 20-1045, ECF No. 25 (Fed. Cir. Apr. 29, 2020)). On May 1, 2020, the Board then issued its General Order in Cases Remanded Under *Arthrex*, in which the Board set forth its determination to "hold all such cases in administrative abeyance." Ex. 2003 at 2. The 571 IPR was explicitly included within the scope of the Board's General Order. *See id.* ¶ 88. The Board has since taken no further action in connection with the 571 IPR, leaving its status presently (1) vacated, (2) remanded to the Board, and (3) held in administrative abeyance.

*Second*, the practical consequence of the Final Decision's indefinite *vacatur* are simple, as the Federal Circuit has recognized: "[T]he judgment in [the prior case] has little precedential effect because it was vacated." *W.Y. Moberly, Inc. v. United States*, 924 F.2d 232, 236 (Fed. Cir. 1991). It is black-letter law widely recognized across the Federal Courts of Appeal that "a decision that has been vacated"—such as the Board's Final Decision in the 571 IPR—"has no precedential authority whatsoever." *Durning v. Citibank, N.A.*, 950 F.2d 1419, 1424 n.2 (9th Cir. 1991)) (citing *O'Connor v. Donaldson*, 422 U.S. 563, 577 n.12 (1975) ("Of necessity our decision vacating the judgment of the Court of Appeals deprives that court's opinion of precedential effect. . .")).

Similarly, the Board has previously "decline[d] to consider" arguments raised by an appellant before the Board, where the appellant relied on a prior decision of the Board that was subsequently vacated by both the Federal Circuit and the U.S. Supreme Court. Ex. 2013 (*Ex Parte Hammad*, Appeal 2017-004004 (P.T.A.B. July 6, 2018)) ("In light of . . . the Supreme Court's instructions ["remand[ing] the case back 'to the United States Court of Appeals for the Federal Circuit with instructions to remand the case to the Patent Trial and Appeal Board to vacate the Board's order'], we will not consider it.") (quoting *PNC Bank Nat'l Assoc. v. Secure Axcess, LLC*, 138 S. Ct. 1982 (2018)). As in *Hammad*, given that the Final Decision to the 571 Petition has no force of law based on its vacatur pursuant to *Arthrex*, the Board should decline to consider it here.

*Third*, even if the Final Decision had not been vacated (with no follow-on action since) as discussed above, no formal relationship exists between the '178 patent and the '473 patent, which is "insufficient to render particular [findings] made during [the PTAB's review] of the ['473] patent equally applicable to the claims of the ['178] patent." *Abbott Labs. v. Dey, L.P.*, 287 F.3d 1097, 1104 (Fed. Cir. 2002). The '178 patent, however, is not based on an application related to the '473 patent, and the '178 patent issued with different claims than the '473 patent. Ex. 1001 at 1:6-14; Ex. 1040 at 1:6-14. Rather, precisely as in *Abbott*, the '178 and '473 patents "have no formal relationship and were presented to the patent office as patentably

distinct inventions." *Id.* at 1105 (no estoppel based on statements made in prosecution of unrelated patent, notwithstanding that the two patents were "commonly owned," and where "the inventor of [one] patent is one of the three inventors of the [other] patent"). The PTAB's review of the Petition should treat the '178 and '473 patents as distinct disclosures having different claims, given that here the '473 patent "discloses a separate invention, includes a distinct prosecution history, and is supported by a different written description" as compared to the '178 patent—which in turn cited *Wu* and *Oh* and was fully evaluated by the Office only "reinforce[s] the well-understood notion that claims of unrelated patents must be [analyzed] separately." *e.Digital Corp. v. Futurewei Techs., Inc.*, 772 F.3d 723, 726-27 (Fed. Cir. 2014) (citing *Texas Digital Sys., Inc. v. Telegenix, Inc.*, 308 F.3d 1193 (Fed. Cir. 2002)). Hence, Petitioner's reliance on the Final Decision is thus improper, and—even if the Board is inclined to consider it notwithstanding its indefinitely-vacated status—the Board should give it no deference.

## IV. CLAIM CONSTRUCTION

Patent Owner submits that the Board should exercise its discretion and deny institution under 35 U.S.C. § 325(d). Grounds 1-7 rely on previously-presented art that was submitted in an IDS and fully evaluated by the Office, namely *Wu* and *Oh* as primary references, as set forth in Section V. If the Board exercises its discretion under § 325(d), express claim construction is not necessary. *See ClearH20, Inc. v.*

*CEVA Animal Health Inc.*, IPR2020-00039, Paper No. 21 at 6 (PTAB Mar. 18, 2020) (determining that no express claim construction was necessary in denying institution under § 325(d)). If the Board deems claim construction necessary, the Board follows the standard set by *Phillips v. AWH Corp.*, 415 F.3d 1303 (Fed. Cir. 2005) (en banc). *See also* 37 C.F.R. § 42.100(b). Accordingly, the '178 patent claims should be construed in accordance with the ordinary and customary meaning of such claims as understood by a one of ordinary skill in the art and the prosecution history pertaining to the patent. *See* 37 C.F.R. § 42.100(b).

**A. Level of Ordinary Skill in the Art**

Petitioner identifies a person of ordinary skill (POSA) as having a bachelor's degree in electrical engineering (or equivalent field) with 2-3 years of work experience in wireless communications. Pet. at 16. Patent Owner submits that the above POSA at the time of the '178 patent would also have work experience dealing with wireless devices such as remote units and antennas.

B. **"Host Unit"** (Claims 1, 10, 15, 21)

The term "host unit" is recited in the context of *first/second* set of downlink channel signal imitations: "the host unit is configurable to send digital representations of a *[first/second] set of downlink channel signals*" (Claims 1, 10); "transmitting from a host unit . . . digital representations of a *[first/second] set of downlink channel signals*" (claim 15); and "the host unit is configured to transmit a

digital representation of a *[first/second] portion of the plurality of carriers*" (claim 21). In a parallel district court proceeding in Delaware (C.A. No. 19-952-MN), the parties dispute the term "host unit" and the parties agree that the terms "downlink signals," "downlink channel signals," and "digital representation" have a plain and ordinary meaning. Ex. 2009 at 1, Ex. 2010 at 6, Ex. 2011 at 3.

1. "Host Unit" means "a digital access unit that manages communications between an operator network and one or more remote radio units"

The proper construction for "host unit" to a POSA is "a digital access unit that manages communications between an operator network and one or more remote radio units." A POSA would review the '178 patent and understand that recitation of "host unit" in the context of the first/second set of downlink channel signal imitations refers to processing composite signals into sets of signals for distribution. Ex. 2001 at 4:28-36, 5:1-3. For example, the '178 patent teaches the network processing of "composite signals" from the operator network. *Id*. at 5:50-65. Specifically, the '178 patent explains that a composite signal is a signal with "more than one carrier . . . in each channel, and, as such, a DRU may receive a channel comprising a signal containing two or more carriers, or a wireless operator may have more than one RF carrier per channel allocated to a single base station." *Id*. at 5:50-56.

Referring to FIG. 1, for example, the host unit (DAU) receives a composite signal from the operator network with carriers (A, B, C, D) and a second composite signal from base station 110p with carriers (E, F, G, H). *Id*. at 5:62-66. Depending on software settings within the DAS, "Carriers A-H are available within DAU 105 to transport data to DRUs." *Id*. at 6:15-18. For example, DAU 105 can propagate downlink channel subset A (A, B, C, D) in a clockwise direction and subset B (E, F, G, H) in a counter-clockwise direction to a plurality of digital remote units DRUs 125A-*k*. *Id*. at 4:28-36, 5:1-3, 5:17-28. Moreover, the host unit (DAU) is described to have the capability "to automatically and adaptively re-allocate data transport resources" under certain configurations. *Id.* at 8:10-21. Accordingly, a POSA in view of the '178 patent would understand "host unit" to mean "a digital access unit that manages communications between an operator network and one or more remote radio units."

2. Petitioner provides no support for its construction of "host unit" and takes a different position in the parallel Delaware proceeding

Petitioner advocates here that "host unit" is "a unit that transports and controls communications between remote units and the signal source." Pet. at 15. Petitioner cites to its expert declaration (Ex. 1003 at 30) that repeats the same claim construction without any analysis or reference to teachings in the '178 patent for support of its claim construction. Yet, in the parallel Delaware proceeding,

Petitioner proposed a different construction for "host unit"—*i.e.*, "[t]he claims do not require the host unit unpack or extract downlink channel signals/carriers from a composite signal." Ex. 2009 at 17, Ex. 2010 at 18, Ex. 2011 at 8. Here, Petitioner offers a different construction in support of a box drawing exercise designed to read on components in the asserted references that are not even described as part of a host unit but rather are part of a base station transceiver (BTS). Pet. at 18 (showing FIG. 2 of *Wu* and drawing a box around Matrix Switch 250 inside BTS 240 and host unit 230 to indicate that Matrix Switch 250 is part of host unit 230, when it should be considered as part of BTS 240). Patent Owner's constructions refers to a "digital access unit," consistent with the '178 patent, and therefore the Board should adopt Patent Owner's construction for "host unit" as "a digital access unit that manages communications between an operator network and one or more remote radio units."

### C. **"Dynamically Change" and "Dynamically Changes"** (Claims 2-5, 16-17)

#### 1. <u>"Dynamically change"/"dynamically changes" means "adaptively change"</u>

The proper construction for "dynamically change" and "dynamically changes" to a POSA means "adaptively change." In claims 2-5, this term is recited in the context of "the host unit is configurable [. . .] to *dynamically change* from . . ." and "the host unit *dynamically changes*" in claims 16-17. Ex. 1001 at 14:28-53, 15:62-16:6. A POSA would review the '178 patent and find that "the Management

Control module [discussed in connection with FIG. 7 herein] which is typically comprised within each DAU [and] is able to automatically and **adaptively re-allocate** data transport resources." Ex. 1001 at 8:16-21 (emphasis added). The DAU can thus adaptively reallocate transport resources such as channel signals to each remote unit. Accordingly, a POSA would understand these terms to term mean "adaptively change."

2. Petitioner's requirement of "change instantly" is not supported in the '178 patent or claims

Petitioner does not offer a formal construction *per se* for "dynamically change" and "dynamically changes," but proposes a meaning with respect to how "host unit" is to function—*i.e.*, the "terms mean the host unit is itself able to make the claimed change *instantly* in response to the conditions as they occur (i.e., automatically change)." Pet. at 15 (emphasis added). Petitioner's asserted requirement to change *instantly* is not supported by the '178 patent's specification and the plain language of the claims.

The plain language of the claims demonstrates that "dynamically change" does not require immediacy, because the claims recite other steps that must occur before the change is made. For example, dependent claim 3 recites, "host unit is configurable, based on a change in network conditions, to dynamically change . . ." Ex. 1001 at 14:34-35. Similarly, claim 3 recites, "host unit is configurable, based on

load balancing, to dynamically change . . ." *Id*. at 14:41-42. Dependent claim 4 recites "the host unit is configurable, based on a change in subscriber needs, to dynamically change . . ." *Id*. at 14:47-48. These examples and others demonstrate that the dynamic change does not occur instantaneously, but rather after some event in the networks—such as an indication that network must account for "load balancing" or a "change in subscriber needs"—occurs. Those measurements and processes do not occur "instantly" and, therefore, neither does "dynamically change."

The '178 patent teaches that the system components, such as the host unit (DAU) and the digital remote units (DRUs), may be configured "manually or automatically" with respect to the sets of downlink channel signals that are sent. *See generally* Ex. 1001 at 6:6-17. By not specifying, the independent claims of the '178 patent cover this broader "manual or automatic" scope. *See RF De., Inc. v. Pac. Keystone Techs., Inc.*, 326 F.3d 1255, 1263 (Fed. Cir. 2003) ("[E]ach claim in a patent is presumptively different in scope."); *Andersen Corp. v. Fiber Composites*, LLC, 474 F.3d 1361, 1369 (Fed. Cir. 2007) ("[T]he common sense notion that different words or phrases used in separate claims are presumed to indicate that the claims have different meanings and scope.").

There is no support in the specification that implies that the term "dynamically change" requires that the change occur "instantly" as Petitioner proposes. Indeed,

the ’178 patent describes that when “a particular downlink carrier is loaded by a percentage greater than a predetermined threshold” the system can “**adaptively modify** the system configuration to begin to deploy, typically although not necessarily slowly, additional radio resources (such as RF carriers, CDMA codes or TDMA time slots) for use by a particular DRU which need those radio resources within its coverage area.” *Id*. at 12:46-60 (emphasis added). As a result, Petitioner’s requirement of “change instantly” is incorrect. Accordingly, a POSA would understand these terms to mean “adaptively change.”

## V. THE BOARD SHOULD REJECT THE PETITION UNDER 35 U.S.C. § 325(d) BECAUSE THE SAME PRIOR ART IS USED AS WAS PREVIOUSLY BEFORE THE OFFICE

Under 35 U.S.C. § 325(d), the Board may reject the Petition “because the same or substantially the **same prior art** or arguments were previously presented to the Office.” In exercising discretion under § 325(d), two threshold issues need to be met: (1) whether the same or substantially the same art and/or arguments were previously presented to the Office; and (2) if either condition of the first part of the framework is satisfied, whether the petitioner has demonstrated that the Office erred in a manner material to the patentability of challenged claims. *See Advanced Bionics*, *LLC v. Med-El Elektromedizinische Geräte GMBH*, IPR2019-01469, Paper 6 at 8 (PTAB Feb. 13, 2020) (precedential). In evaluating these threshold issues, the Board considers the following non-exclusive factors:

> (a) the similarities and material differences between the asserted art and the prior art involved during examination; (b) the cumulative nature of the asserted art and the prior art evaluated during examination; (c) the extent to which the asserted art was evaluated during examination, including whether the prior art was the basis for rejection; (d) the extent of the overlap between the arguments made during examination and the manner in which the Petitioner relies on the prior art or Patent Owner distinguishes the prior art; (e) whether petitioner has pointed out sufficiently how the Examiner erred in its evaluation of the asserted prior art; and (f) the extent to which additional evidence and facts presented in the petition warrant reconsideration of the prior art or arguments.

*See Becton*, *Dickinson & Co. v. B. Braun Melsungen AG*, IPR2017-01586, Paper 8 at 17-18 (PTAB Dec. 15, 2017) (precedential); *see also, e.g., ClearH20*, IPR2020-00039, Paper No. 21 at 24-25.

### A. Factors (a)-(d) Justify Denying Institution

#### 1. *Wu*, *Oh*, *Sabat '426*, and *CPRI* were previously presented in an IDS during examination of the '178 Patent

First, when the Board exercises its discretion to deny institution under 35 U.S.C. § 325(d), the initial threshold issue is whether the references presented in the Petition are the "**same or substantially the same as those previously presented to the Office**." *Advanced Bionics,* IPR2019-01469, Paper 6 at 8 (emphasis added). The art must have been previously presented to the Office during proceedings

pertaining to the challenged patent. *Id*. Previously presented art includes "art provided to the Office by an applicant, such as on an **Information Disclosure Statement (IDS)**." *Id*. at 8 (emphasis added). Petitioner relies on *Wu* (Ex. 1005) and *Oh* (Ex. 1023) as primary references in Grounds 1-7, and Petitioner relies on *Sabat '426* (Ex. 1040) and *CPRI* (Ex. 1006) as secondary references in Grounds 2 and 4. Patent Owner submitted *Wu*, *Oh*, *Sabat '426*, and *CPRI* to the Office in the 5/12/17 IDS at 3-4, during examination of the '178 patent. Ex. 2002, '178 File History. Patent Owner therefore previously presented *Wu*, *Oh*, *Sabat '426*, and *CPRI* to the Office in and IDS that are the **same prior art** relied upon in the Petition.

2. *Wu*, *Oh*, *Sabat '426*, and *CPRI* were evaluated by the Examiner in the first office action

An Examiner must consider all the prior art references "(alone or in combination)" submitted in an IDS before a first Office Action ("OA"). *See* MPEP §§ 609, 707. These references were submitted to the Office prior to the 6/5/17 first OA. The Examiner signed (on 5/25/17) and considered the 5/12/17 IDS listing *Wu*, *Oh*, *Sabat '426*, and *CPRI* in the 6/5/17 first OA at 2. Specifically, in the first OA, the Examiner stated that the "information disclosure statement (**IDS**) submitted on . . . **May 12, 2017** . . . is in compliance" and "the information statement is being considered by the examiner." Ex. 2002 at 6/5/17 OA, at 2 (emphasis added).

3. Petitioner relies on *Wu* and *Oh* to allege the exact limitations that the Examiner previously found missing in the cited references

In the 9/5/18 NOA, after distinguishing over the cited references, including *Wu* and *Oh*, in the 6/5/17 first OA and the 9/20/17 FOA, the Examiner gave reasons for allowance that "**no prior art reference or <u>combination</u> of prior art references disclose or suggest**" the independent claims including "the host unit is configurable to send digital representations of a *second set of downlink channel signals* to the first remote unit at a *second point in time*, the second set of downlink channel signals *for transmission at the antenna of the first remote unit*" and "wherein a number of downlink channel signals in the *first set of downlink channel signals is different from a number of downlink channel signals in the second set of downlink channel signals*." Ex. 2002 at 9/5/18 NOA, 6-7 (emphasis added). In the 9/5/18 NOA, the Examiner gave clear notice to the public what was missing in the cited prior art that includes *Wu* and *Oh*. *See* MPEP § 1302. Petitioner now relies on *Wu* and *Oh*, which were previously presented to the Office, to allege these **exact limitations** that **<u>overlaps</u>** with what the Examiner found missing in the prior art. Pet. at 24, 59-60. The Board should defer to the Examiner's previous conclusion that no prior art including *Wu* and *Oh* discloses or suggests the '178 patent claims.

4. <u>Asserted References are Cumulative in Nature</u>

Petitioner's assertion of *Wu*, *Oh*, *Sabat '426*, and *CPRI* in Grounds 1-7 are cumulative because they were previously presented in the 5/12/17 IDS at 3-4 and evaluated during prosecution of the '178 patent. The Examiner also asserted

*Sulzberger*, *Boldi*, *Casanova*, and *Zhang* in the 6/5/17 first OA and 9/20/17 FOA. Petitioner does not, and cannot, argue that the Petition raises grounds for unpatentability not identified by the cited references to *Wu*, *Oh*, *Sabat '426* and *CPRI* in the 5/12/17 IDS and, therefore, re-use of this art disclosed in prosecution of the '178 patent is necessarily cumulative and merits rejection under § 325(d).

Regarding *OBSAI*, Petitioner admits that *OBSAI* does not materially differ from *Wu*: "[t]he OBSAI standard is taught by Wu and defines a protocol based on packetizing communications between a local baseband module and a remote RF module." Pet. at 30. And Petitioner's reliance on *Sabat '552* for "a hub in a distributed antenna network [that] can be interconnected to additional hubs" (Pet. at 47-48) is cumulative to the teachings of interconnected base stations ($BN_1$ to $BN_N$) in *Boldi* (Ex. 2008, FIG. 1) cited by the Examiner in the 6/5/17 first OA and the 9/20/17 FOA. Referring to FIG. 1 of *Boldi* (reproduced below), base stations $BN_1$ to $BN_N$ are interconnected, and each BN is connected to respective antenna stations AS. Specifically, *Boldi* teaches that each base station BN includes:

> The base station processing sections BSPP1, $BSPP_N$ comprise apparatus which perform the functions of processing baseband signals, whereas the central units $CU_1$-$CU_{AN}$ perform processing of the signals to be transmitted or received in accordance with a particular protocol used for the transport of the information on the specific optical paths . . .

Ex. 2003 at 7:54-59. Because *Boldi*'s "main stations" disclose the same subject matter as *Sabat '552*'s "hubs," the disclosures in *Sabat '552* cited by Petitioner and the teachings of *Boldi* considered and cited by the Office do not materially differ.

*Boldi* (Ex. 2008) FIG. 1

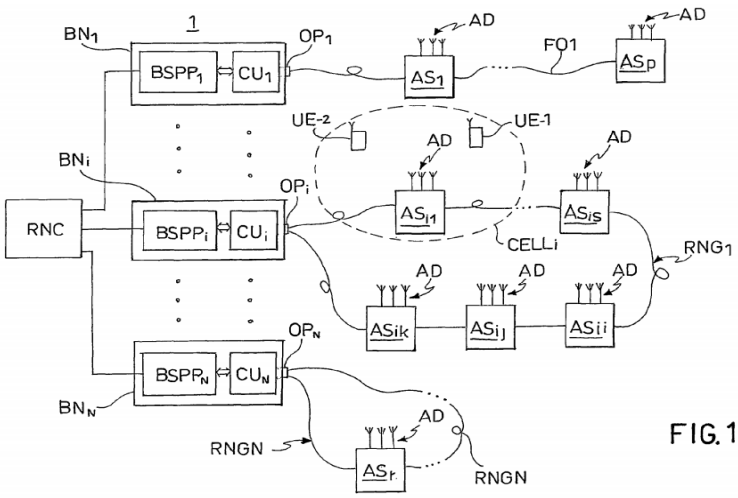


5. <u>The Board Has Supported § 325(d) Denial Based on Previously Presented Art in an IDS</u>

Although *Wu*, *Oh*, *Sabat'426*, *Sabat '552*, *CPRI*, and *OBSAI* were not used by the Examiner in a prior art rejection, discretionary denial under § 325(d) is supported by the fact of Patent Owner's presentation and Examiner's consideration and evaluation of these references in an 5/12/17 IDS, which are the same or substantially the same prior art relied upon in Grounds 1-7. *See Roku, Inc. v. Universal Elecs., Inc.*, IPR2019-01619, Paper 11 at 11-12 (PTAB Apr. 2, 2020). In *Roku,* Petitioner relied on a reference that was cited by Patent Owner in an IDS two

months before issuance of a reexamination certificate and the Board considered that cited reference as previously presented for purposes of § 325(d). The *Roku* Petitioner argued that the reference was not considered substantively or applied in any rejection, and that a combination involving that reference was not considered. *Roku*, Paper 11 at 12. The Board rejected the Petitioner's arguments in *Roku* because the reference was presented to the Patent Office, thus satisfying factors (a), (b), and (c) to deny institution under § 325(d). *Id*. (exercising discretion under § 325(d); finding that because "the same prior art was previously presented to the Office, we need not reach the question of 'whether the same or substantially the same *arguments* previously were presented to the Office'") (emphasis in original). Following the same reasoning as in *Roku*, the Board should find that at least factors (a), (b), and (c) have been met because *Wu*, *Oh*, *Sabat'426*, and *CPRI* were all previously presented to the Office during prosecution of the '178 patent. Similarly, as in *Roku*, because the same or substantively the same references as Petitioner asserts were previously before the Examiner, the Board should find there is no need to "reach the question of whether the same or substantially the same *arguments* previously were presented to the Office"—and the Board should find that factor (d) has been met, as well. *Id.* (internal quotation removed).

Accordingly, factors (a) through (d) favor denying institution.

### B. Factors (e) and (f) Justify Denying Institution

The second threshold issue under § 325(d) is whether the petitioner has demonstrated sufficiently a "material error by the Office" in evaluating the asserted references. *See Roku*, Paper 11 at 10; *see also Advanced Bionics*, Paper 6 at 10. Here, Petitioner has not pointed out how the Examiner *materially erred* in evaluating the cited references to *Wu*, *Oh*, *Sabat '426*, and *CPRI*, and has provided no additional evidence or facts that warrant reconsideration of the prior art or arguments. *See, e.g.*, *Becton, Dickinson*, Paper 8 at 17-18. The Petition does not allege—much less show—that the Office erred in any way regarding the challenged claims in view of the asserted references.

*First*, the Office considered the primary references to *Wu* and *Oh*, the secondary references to *Sabat '426* and *CPRI*, and related arguments—and still found the '178 patent claimed allowable subject matter. Ex. 2002 at 9/5/18 NOA, 6-7. Indeed, to ensure patentability, Patent Owner even filed an RCE to remove the '178 patent from allowance, and conducted multiple telephone interviews with the Examiner to discuss the prior art. *See* Section III. The Office found all the '178 patent claims now challenged by Petitioner to be novel over the cited art and arguments raised during prosecution of the '178 patent. *See* Section II.C. Petitioner does not address any of these relevant parts of the '178 File History.

*Second*, Petitioner has not shown how the Office erred in allowing the challenged claims over *Wu*, *Oh*, *Sabat'426*, and *CPRI* during prosecution, or how the Office erred in using *Sulzberger*, *Boldi*, *Casanova*, and *Zhang*. Indeed, Petitioner is silent about the rejections issued during the prosecution of the '178 patent and states only that "there was no substantive discussion of Wu or Oh in the prosecution" without further elaboration. Pet. at 13. A "conclusory assertion is insufficient to sufficiently point out how the Examiner erred." *Bio-Rad Lab, Inc. v. 10X Genomics, Inc.*, IPR2019-00566, Paper 21 at 11 (PTAB Jul. 22, 2019) (rejecting conclusory statements of error and denying Petition under § 325(d)).

*Third*, Petitioner overstates the importance of the Final Decision to the 571 Petition regarding the '473 patent. *Wu* and *Oh* were never before the Office in connection with the '473 patent. But here, *Wu* and *Oh* were previously presented and fully considered by the Office in connection with the '178 patent completely outside the context of the 571 IPR—not to mention that the 571 Petition (asserting *Wu* and *Oh*) was also in front of the Office. Moreover, reliance on the Final Decision to the 571 Petition for evidentiary support is improper because it has been vacated, remanded, and held in abeyance pending Supreme Court review of *Arthrex*. *See* Section III.C.

*Fourth*, rather than show any potential error by the Office, Petitioner attempts to blame *Patent Owner* for the Office's decision to allow the '178 patent claims

based on "concealment" of the 571 Final Decision. But Patent Owner voluntarily withdrew issuance of the '178 patent so it could submit the 571 Petition and accompanying Acampora Decl., which were discussed with the Examiner and fully considered by the Office—and following which the Office nonetheless allowed the '178 patent claims. *See* Section II.C.4. Petitioner's false accusation relating to concealment should be ignored for purposes of § 325(d) denial. Petitioner has simply failed to demonstrate "material error" by the Office.

Accordingly, factors (e) through (f) favor denying institution.

## VI. THE PETITION FAILS TO SHOW THAT GROUNDS 1-7 HAVE A REASONABLE LIKELIHOOD OF SUCCESS

An examination of the primary references to *Wu* and *Oh*, and the secondary references to *Sabat '426*, *Sabat '552*, *CPRI*, and *OBSAI* reveals substantial deficiencies. Specifically, Petitioner has failed to "specify where each element of the claim is found in the prior art patents or printed publications relied upon." 37 C.F.R. § 42.104(b)(4). Petitioner has also failed to present its grounds for obviousness with particularity. Accordingly, Petitioner has not demonstrated that it would prevail in showing unpatentability of any of the challenged claims based on Grounds 1-7 for anticipation or obviousness.

### A. Grounds 1-5: *Wu* Fails to Disclose Each and Every Element to Support Anticipation or Obviousness of the Challenged Claims

Petitioner has not shown a reasonable likelihood of success for Grounds 1-5,

challenging claims 1-25, because *Wu* fails to disclose or suggest several key claim elements. Most notably, *Wu* lacks a "host unit" that is "configurable" to send **different sets and different numbers** of downlink channel signals at a first time and a second time for transmission at an antenna of a first remote unit. Accordingly, the challenged claims are *novel* over *Wu*, as the Patent Office correctly found during prosecution of the '178 patent.

1. Ground 1: *Wu* fails to anticipate claims 1-25

Anticipation under 35 U.S.C. § 102 requires the presence in a single prior art disclosure of all elements of a "claimed invention *arranged as in the claim*." *Net MoneyIN, Inc. v. VeriSign, Inc.*, 545 F.3d 1359, 1371 (Fed. Cir. 2008). Petitioner has failed to specify the presence of key claim elements in *Wu*, such as a "host unit" as arranged in the challenged claims.

**a. Petitioner improperly conflates a host unit with a base station transceiver (BTS) in asserting *Wu* to the challenged claims**

For Grounds 1-5, Petitioner must rely on an improper box-drawing exercise in *Wu* that combines *Wu*'s base station transceiver (BTS) 240 with host units 230 to allege the that the '178 patent's single claimed "host unit" consists of *both* components BTS 240 and host units 230 from *Wu*. Pet. at 18, 20. This combination of disparate components from different units in *Wu* conflicts with both the '178 patent's plain language and settled case law.

First, Petitioner's reliance on the Final Decision to the 571 Petition to support its box drawing exercise should be rejected because the Final Decision has been vacated, remanded, and held in abeyance. *See* Section III.C; *see also* (Ex. 2002) (General Order, 5).

The '178 patent, in FIG. 1, discloses base stations (BTS) 110A and 110p as signal sources **separate** from the host unit (DAU 105). The '178 patent claims require that the "host unit" is coupled to "at least one signal source." Petitioner relies on *Wu*'s transceiver 260 inside base station transceiver (BTS) 240 as a "signal source" and relies on *Wu*'s matrix switch 250 inside BTS 240 along with host units 230 as the "host unit." Pet. at 19-22. But such reliance on the "**same structure to meet different claim limitations** is **unreasonable** because the use of different language to describe each limitation suggests that they have different meaning." *Oxford Nanopore Techs., Inc. v. Pacific Biosciences of Cal., Inc.*, IPR2018-01792, Paper 10 at 18 (PTAB Mar. 26, 2019) (emphasis added). Likewise, Petitioner's reliance on the BTS 240 meeting both the "host unit" and "signal source" elements is unreasonable and should be rejected.

Moreover, in *Net MoneyIN*, the Federal Circuit held that "disclosure of each element is not quite enough—this court has long held that '[a]nticipation requires the presence in a single prior art disclosure of all elements of a claimed invention *arranged as in the claim*.'" *Net MoneyIN*, 545 F.3d at 1371. As such, to anticipate

the ’178 patent *Wu* must disclose each claim element arranged or combined in the same way as the ’178 patent—*i.e.*, a host unit separate from a signal source BTS. In *Wu*, that is exactly how it is described—host units 230 are arranged separately from BTS 240 and do not include a matrix switch 250. Accordingly, a “host unit” in the challenged claims of the ’178 patent is properly considered to be separate from a signal source, such as *Wu*’s BTS 240. But Petitioner argues the opposite—*i.e.*, that components of *Wu*’s BTS 240 somehow nonetheless anticipate the ’178 patent’s “host unit.”

**b. *Wu* fails to disclose “wherein the host unit is configurable to send digital representations of a [first set / second set] of downlink channel signals to the first remote unit at a [first point in time / second point in time], the [first set / second set] of downlink channel signals for transmission at the antenna of the first remote unit”**

These terms are recited in claims 1 and 10. Claim 15 recites similar terms from the context of “transmitting from the host unit” at a first and second point in time digital representations of first and second set of downlink channel signals to first remote unit. Claim 21 recites that that the “host unit is configured” to transmit a digital representation of a first and second portions of the plurality of carriers to the first remote unit. *Wu*, in FIGS. 2 and 3 (reproduced below), discloses host units 230, separated from base transceiver station (“BTS”) 240, that are merely *pass-through* devices that simply relay digitized signals that they receive from the BTS

240 to a remote transceiver unit ("RTU") 310. Specifically, *Wu* teaches that host units 230 "**relay digitized signals** between BTS 140 and remote transceiver units (RTUs) 110 within the remote cell regions 120." *Wu* at [0030] (emphasis added).

| *Wu* (Ex.1005) FIGS. 2, 3 | |
|---|---|
| 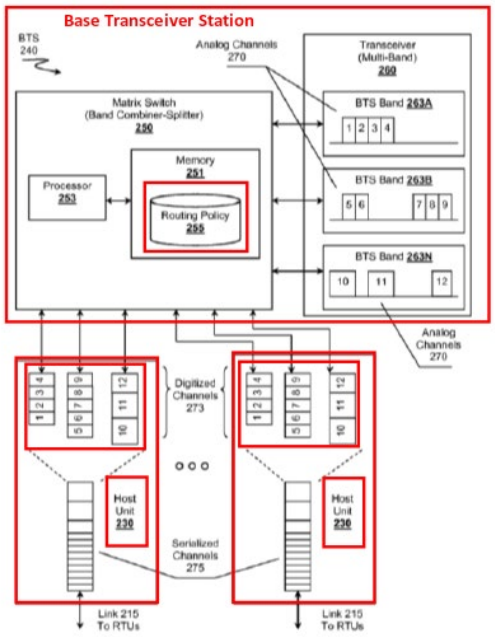  Figure 2 | 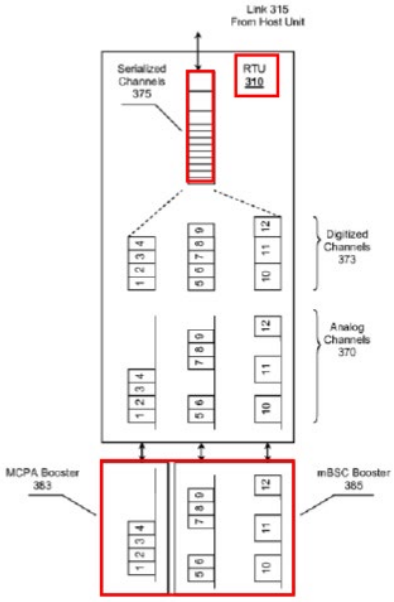  Figure 3 |

Because host units in *Wu* only relay digitized signals from BTS 240 to RTUs 110, they are not "configurable" to send **different sets** and **different number** of downlink channel signals a first time and second time for transmission at an antenna of the same RTU. By way of contrast, the '178 patent, in FIG. 1 (reproduced below), discloses a "host unit" or DAU 105 that is substantially more than a pass-through device; rather, it is responsible for managing the distribution and routing of

communication signals (*e.g.*, downlink channel signals) to specific digital remote units ("DRUs"). Indeed, the '178 patent's DAU 105 can address efficiency and radio capacity issues by changing the number or sets of downlink signals for transmission at an antenna of a specific DRU at different points in time. *Id*. at 14:14-27, 15:17-32, 15:48-61, 16:33-43, 17:18-18:3.

'178 Patent (Ex.1001) FIG. 1

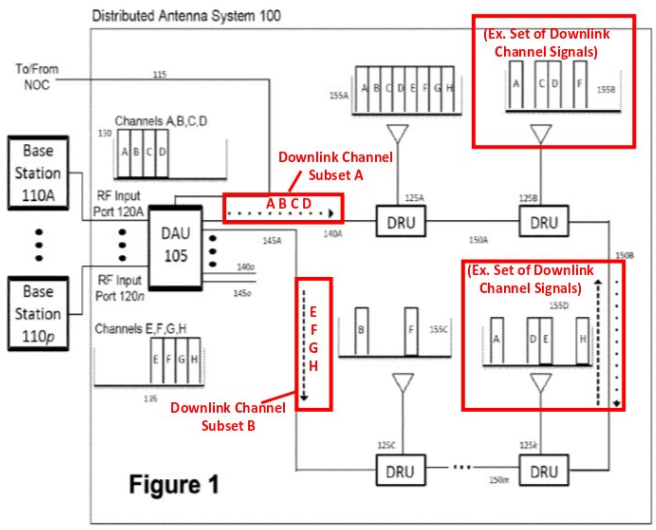


For example, the '178 patent discloses that the host unit (DAU 105) performs multiple intelligent functions:

> One function of the DAU 105 is to determine the direction in which downlinked channels are propagated around the ring. As just one example, the embodiment shown in FIG. 1 is configured to have downlink channels A, B, C and D propagate in a first direction, for example clockwise, and channels E, F, G, and H propagate in the

> counter direction, although it will be understood that the **number of channels** propagating in each direction need not be equal, nor adjacent, nor sequential. Likewise, the **number of channels received at each DRU is assigned by the DAU** and need not be equal, adjacent or sequential, but instead will typically be any configuration that optimizes network utilization.

(Ex. 1001 at 5:17-28) (emphasis added). The '178 patent also teaches that one or more "carriers" can exist in each channel, and a digital remote unit "**may receive a channel comprising a signal containing two or more carriers**. *Id*. at 5:53-54 (emphasis added). Each DRU includes settings that are configured such that a specific set of downlink channels signals are output at its antenna. For example, referring to DRU 125B, the '178 patent discloses that:

> As with DRU 125A, the **software settings with DRU 125B** are configured either manually or automatically such that **Carriers A, C, D and F are present in the downlink output signal 155E at the antenna port of DRU 125B**.

*Id*. at 6:29-32 (emphasis added).

In contrast, host units 230 in *Wu* are not configurable or configured in the same way as DAU 105 in the '178 patent. For instance, *Wu*, in FIG. 1 (reproduced below), discloses a BTS 140 sending digitized signals to host units 130 that then relay the signals to remote transceiver units in remote cell regions 120, such that each RTU within a remote region receives the *same set of signals*. Ex. 1005 at

[0030]. That is, hosts units 130 in *Wu* are not configurable to send a first set of downlink channel signals to a RTU 110 at a first time and send a second set of downlink channel signals to the same RTU 110 at a second time for transmission at an antenna at the same RTU 110.

| *Wu* (Ex.1005) FIG. 1 |
| --- |
| 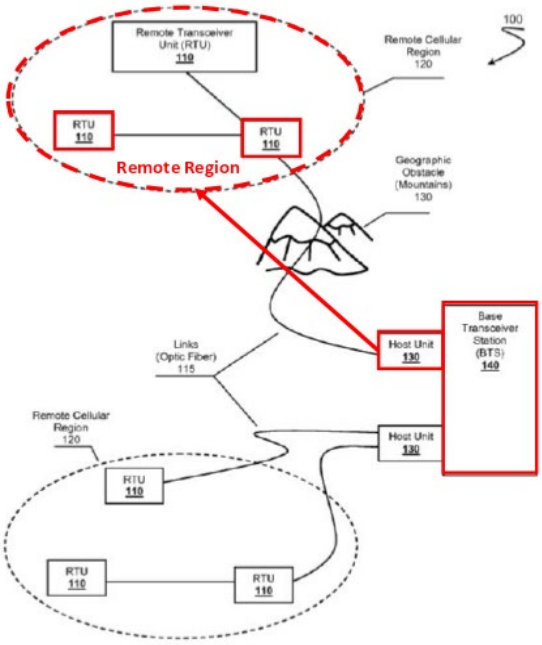 <br>Figure 1 |

Indeed, Petitioner does not argue that *Wu* discloses "the second set of downlink channel signals [is] for transmission at the antenna of the first remote unit" recited in the challenged claims. Pet. at 24. Rather, Petitioner relies on *Wu*'s routing policy 255 in the matrix switch 250 inside BTS 240—not host units 230—to argue

that "Wu describes a routing policy that includes rules for reacting to events and conditions," and that "[t]he triggered routing actions include, e.g., 'to allocate more channels' to a region 'to increase the bandwidth available.'" Pet. at 24. Here, Petitioner relies on matrix switch 250 to allocate more channels to infer a different set of downlink channel signals after allocation. But there is no teaching in *Wu* that allocating more channels causes host units 230 to send a second set of downlink channel signals for output at an antenna of an RTU 310 that is different in number from a first set of downlink channel signals for output at the same RTU 310 before allocating more channels.

Furthermore, the challenged '178 patent claims require both the first set and second set of downlink channel signals at a first time and a second time are output for transmission at an antenna of the **same remote unit**. Ex. 1001 at 15:17-26. These features capture a point of novelty of the '178 patent, which is to "implement dynamic rearrangements [to the allocation of the data streams] based on ever-changing network conditions and subscriber needs." Ex. 1001 at 1:49-50, 2:23-24. There is no teaching in *Wu* that host units send a first set and a second set at a first time and second time for transmission from an antenna of the same RTU.

Nor could Petitioner show any such teaching. *Wu*, in FIG. 4 (reproduced below), discloses that each host unit 420 can only send the same signal to each connected RTU for transmission. Ex. 1005, FIG. 4. Referring to FIG. 4, *Wu*'s

"[s]imulcast configuration 493 represents a configuration where a single host unit 430 couples to more than one RTU 410 in a one-to-many configuration. A single host unit 430 can duplicate serialized carrier channels as necessary and send the serialized data over more than one fiber optic link to multiple RTUs 410." *Id*. at [0051].

| *Wu* (Ex.1005) FIG. 4 |
| --- |
| 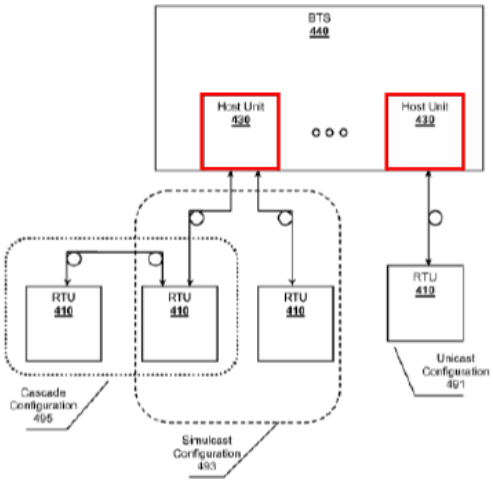  |

Because each host unit 430 in *Wu* relays the same signal to one or more RTUs for transmission at its antenna, the host units 430 are not described by *Wu* as "configurable" to send digital representations of a second set of downlink channel signals to a first RTU at a second point in time, the second set of downlink channel signals for transmission at the antenna of the first RTU as required by the challenged

claims. Accordingly, Petitioner has not met its burden that *Wu* discloses a "host unit" that is "configurable" or "configured" as arranged in the challenged claims.

**c. *Wu* fails to disclose "wherein a number of downlink channel signals in the first set of downlink channels is *different* from a number of downlink channel signals in the second set of downlink channel signals"**

These terms are recited in claims 1, 10, and 15. Claim 21 recites that "the first portion being different than the second portion." For these terms, Petitioner alleges that "*Wu*'s routing policy can trigger the system 'to allocate more channels' to a region 'to increase the bandwidth available' (Ex. 1005 ¶0046) in response to conditions." Pet. at 24. Petitioner further alleges that "This means that the number of channel signals in the first set (prior to triggering event) is different (fewer) than the number of channel signals in the second set (after triggering event), satisfying this limitation. Ex. 1003 ¶54." *Id*. As noted previously, Petitioner relies on *Wu*'s separate matrix switch 250 to allocate more channels—*not* a host unit, as in the challenged claims. More importantly, there is no underpinning in *Wu* that supports a nexus between allocating more channels with sending different sets with different numbers of downlink channel signals before and after the triggering event. Without a disclosure in *Wu*, Petitioner has not met its burden that *Wu* discloses a first set and a second set having different number of downlink channel signals.

#### d. *Wu* fails to disclose a host unit "configurable" or "configured" to "dynamically change" or "dynamically changes" sending representations of sets of downlink channel signals

Claims 2-6 and 16-18 are dependent claims and recite that a "host unit" is "configurable" or "configured" to "dynamically change" or "dynamically changes" sending digital representations of sets of downlink channel signals. As discussed above in Section VI.A.1.b, host units in *Wu* are merely pass-through components that relay signals from a BTS to a RTU and do not implement adaptive changes at the host. Petitioner has not met its burden that *Wu* discloses these dependent claims.

#### e. *Wu* does not disclose "destination information identifying the first remote unit" and a "header" in the destination information

Independent claim 21 recites "destination information identifying the first remote unit" and dependent claim 23 recites "information identifying the first remote unit is provided in a header." Ex. 1001 at 16:19-65. These limitations are missing in *Wu*. Indeed, Petitioner acknowledges that the destination information must identify specific RTUs. Pet. 38. Rather than pointing to any such teaching in *Wu*, Petitioner cites to the secondary references to *CPRI* and *OBSAI* (Pet. at 38) for these missing limitations. Petitioner's incorporation of *CPRI* and *OBSAI* does not support "anticipation[, which] requires the presence in a single prior art disclosure of all elements of a claimed invention." *Net MoneyIN*, 545 F.3d at 1371. Petitioner has

not met its burden that *Wu* discloses claim 21 and dependent claim 23 for anticipation.

2. Ground 2: *Wu* alone or in view of *Sabat '426* fails to render claims 1-25 obvious

Petitioner has failed to provide a *prima facie* case of obviousness under 35 U.S.C. § 103. Petitioner must make at least "a finding that the prior art included each element claimed, although not necessarily in a single prior art reference, with the only difference between the claimed invention and the prior art being the lack of actual combination of the elements in a single prior art reference." *KSR Int'l Co. v. Teleflex Inc.*, 550 U.S. 398, 418 (2007). Petitioner has not made such a showing regarding the challenged claims.

**a. Ground 2 should be rejected because it has not been presented with particularity**

Petitioner must identify "with particularity" the "grounds on which the challenge to each claim is based." 35 U.S.C. § 312(a)(3); *see also Adaptics Ltd. v. Perfect Co.*, IPR2018-01596, Paper 20 at 16 (PTAB Dec. Mar 6, 2019). The Board has held that petitioners should "avoid submitting a repository of all the information that a judge could possibly consider, and instead focus on concise, well-organized, easy-to-follow arguments supported by readily identifiable evidence of record." *Id.* (*quoting* Practice Guide, 77 Fed. Reg. 48,756, 48763 (Aug 14, 2012)). To this point, "where a petition contains voluminous or excessive grounds "[t]he panel will

evaluate the challenges and determine whether . . . the entire petition should be denied under 35 USC § 314(a)." *Id*. at 17-18.

Petitioner, in Ground 2, seeks to challenge claims 1-25 as obvious based on *Wu* alone or *Wu* in light of *Sabat '426*. But Petitioner provides minimal analysis of how to apply *Wu* alone or *Wu* in view of *Sabat '426* to the challenged claims, asserting only that "[t]his argument applies to all of the obviousness grounds herein that rely on Wu." Pet. at 42. In Ground 2, Petitioner fails to analyze specific claim elements taught by this combination and does not apply it to any specific claims. There is no discussion of where the individual disclosures of *Wu* and *Sabat '426* respectively end, and no analysis of the required motivation to combine *Wu* as modified by *Sabat '426*. Rather than provide any real analysis, Petitioner asks the Board to create arguments for Ground 2. The Board should not do so, and should reject Ground 2 as lacking a sufficient showing of particularity.

**b. Ground 2 fails to show a reasonable likelihood that *Wu* alone or in view of *Sabat '426* renders any challenged claim obvious**

As discussed above, *Wu* fails to disclose missing elements detailed in Section VI.A.1. Petitioner does not offer *Sabat '426* to cure the deficiencies in *Wu* as set forth above—most notably, to disclose a host unit that is configurable to send different sets and different number of downlink channel signals at a first time and second time for transmission at an antenna of a remote radio unit. Petitioner relies

on *Sabat '426* solely to show "combin[ing] into a single hub unit, both (a) a programmable switch for dynamic capacity allocation to remote antenna units and (b) digital interfaces to remote antenna units." Pet. at 42. Because *Sabat '426* does not cure the deficiencies of *Wu*, Petitioner has not met its burden to show that *Wu* alone or in view of *Sabat '426* renders claims 1-25 obvious.

3. Ground 3: *Wu* in view of OBSAI fails to render claims 8, 11, 19, 21 and 23-25 0obvious

**a. Ground 3 should be rejected because it has not been presented with particularity**

Ground 3 seeks to challenge claims 8, 11, 19, 21, and 23-25 as obvious over *Wu* in view of the *OBSAI* standard. But as with *Sabat '426* discussed above, Petitioner is again silent as to how to apply this combination to the challenged claims. Instead, Petitioner offers that "Wu does not regurgitate details of the OBSAI standard" and "[i]f it is argued for that reason that [claims 8, 11, 19, 21, and 23-35] are not anticipated by Wu, these claims are obvious in light of Wu plus the OBSAI standard (*e.g.*, Exs. 1007, 1008)." Pet. at 43. Petitioner provides no further analysis of how to apply *Wu* in view of *OBSAI* to the challenged claims other than asserting that "[i]t would have been obvious" to do so "because Wu expressly teaches to use the OBSAI standard." *Id.* But this conclusory allegation does not actually show *how* the combination supports Petitioner's challenge, and thus Petitioner does not supply a sufficiently particular basis for Ground 3 to be instituted.

#### b. Ground 3 Fails to show a reasonable likelihood that *Wu* in view of *OBSAI* renders any challenged claim obvious

Petitioner does not offer *OBSAI* to cure the missing elements in *Wu* as detailed in Section VI.A.1. And there is no teaching in *Wu* of packetizing digital representations of downlink channel signals recited in claims 8, 11, 19, 21, and 23-25, which depend on claims 1, 10, 15 and 21. Thus, even if *OBSAI* is combined with *Wu*, the combination still does not disclose each element of claims 1, 10, 15 and 21. Petitioner has failed to meet its burden to show that *Wu* in view of *OBSAI* renders claims 8, 11, 19, 21, and 23-25 obvious.

### 4. Ground 4: *Wu* in view of *CPRI* fails to render claims 8-9, 11, and 19-25 obvious

#### a. Ground 4 should be rejected because it has not been presented with particularity

Ground 4 seeks to challenge claims 8-9, 11, and 19-25 as obvious over *Wu* in view of the *CPRI* standard. But Petitioner once again is silent as to how to apply this combination to the challenged claims. Instead, Petitioner offers that "[i]f it is argued that Wu does not anticipate because Wu does not re-state these details of the CPRI standard, these claims are obvious in light of Wu plus the CPRI standard." Pet. at 43. Petitioner provides no further analysis of how to apply Wu in view of CPRI to the challenged claims. As such, Petitioner does not supply a sufficiently particular basis for Ground 4 to be instituted.

#### b. Ground 4 fails to show a reasonable likelihood that *Wu* in view of *CPRI* renders any challenged claim obvious

Petitioner does not offer *CPRI* to cure the missing elements in *Wu* as detailed in Section VI.A.1. Petitioner only offers CPRI to show that "the CPRI protocol [] packetizes with addresses for networking configurations." Pet. at 43-44. But Petitioner presents no arguments regarding how *Wu* in view of *CPRI* discloses destination information identifying a specific remote unit as recited in the challenged claims. Petitioner only asserts that *CPRI* discloses "addresses," but not destination information identifying a specific remote unit. Petitioner has thus failed to show that *Wu* in view of *CPRI* renders claims 8-9, 11, and 19-25 obvious.

### 5. Ground 5: *Wu* in view of *Sabat '552* fails to render claims 26-30 obvious

Claim 26 recites similar limitations as claim 21. As detailed in Section VI.A.1, *Wu* does not disclose each element of claim 21 such as a "host unit" configured to transmit digital representations of first and second portions of the plurality of carriers to a first remote unit, which are recited in claim 26. Petitioner does not offer *Sabat '552* to cure the deficiencies of *Wu* with respect to a host unit configured to transmit the claimed first and second portions of the plurality of carriers to the first remote unit.

Claim 26 also recites "at least one interface to communicatively couple the host unit to one or more additional host units." This element is missing in *Wu*. For

this missing element, Petitioner relies on *Sabat '552* to argue that "Wu does not disclose that the matrix switch/unit 230 could be coupled to another matrix switch/unit 230," but that "Sabat '552 disclosed that hubs (35) in a digital wireless RF distribution system can be coupled to other hubs through digital cross connects 37." Pet. at 45. This motivation to combine *Sabat '552* with *Wu* is flawed, mainly because a POSA reviewing *Wu* would find that matrix switch 230 is part of a base transceiver station (BTS)—not a host unit—and therefore coupling a matrix switch with another matrix switch does not equate to coupling a host unit to another host unit.

Furthermore, *Wu* in view of *Sabat '552* does not suggest a matrix switch/unit that can be coupled to another matrix switch/unit. *Wu*'s matrix switch/unit includes a routing policy that includes rules for reacting to events and conditions. Ex. 1005, ¶¶ 0038-47. But *Sabat '552* does not suggest distributing the functionalities of a routing policy over one or more units. *Sabat* '552, in FIG. 1 (reproduced below) explains that "NMS 60 distributes individual alarms to the appropriate tenants, and maintains secure transmission for each tenant, whereas each tenant 15 is provided access to only their own respective System, for monitoring and control purposes." Ex. 1008 at 9:36-39. *Sabat '552*'s NMS 60 is configured to monitor the network, much like the matrix switch/unit in *Wu*.

*Sabat '552* (Ex. 1005) FIG. 1

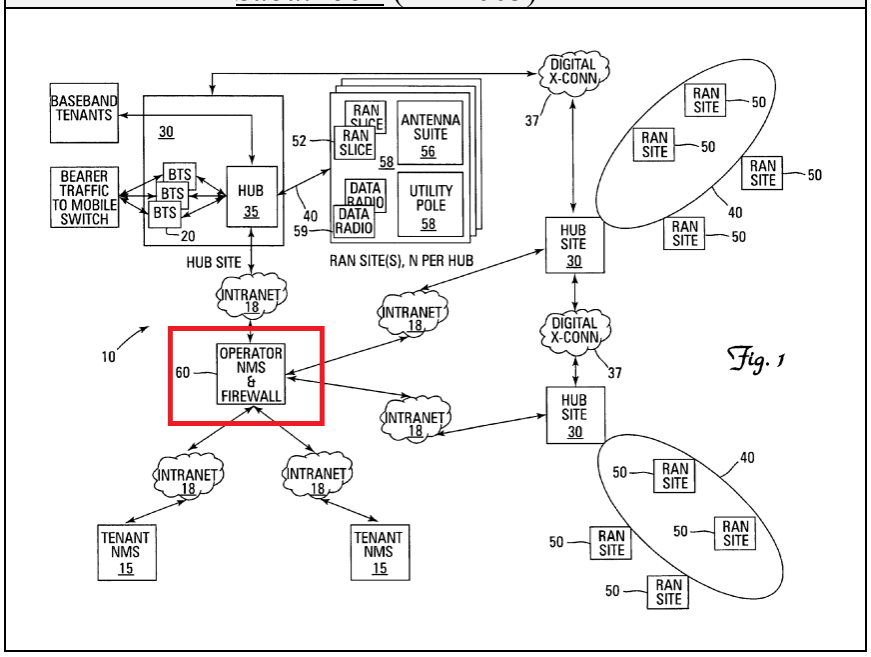


As such, *Sabat '552* does not teach these functions across multiple units and therefore does not suggest the host unit of claim 26 with "at least one interface to communicatively couple the host unit to one or more additional host units."

### B. Grounds 6-7: *Oh* Fails to Support Anticipation or Obviousness of Any Challenged Claim

As with *Wu*, Petitioner's other primary reference—*Oh*—fails to disclose, teach, or suggest each element of the challenged claims, which is why the Office correctly allowed the challenged claims over *Oh* during prosecution.

1. Ground 6: *Oh* fails to anticipate claims 1-8, 10-11, 13, 15-19, 21, and 23-24

**a. *Oh* fails to disclose "wherein the host unit is configurable to send digital representations of a [first set / second set] of downlink channel signals to the first remote unit at a [first point in time / second point in time], the [first set / second set] of downlink channel signals for transmission at the antenna of the first remote unit"**

These terms are recited in claims 1 and 10. Claim 15 recites similar terms from the context of "transmitting from the host unit" at a first and second point in time digital representations of first and second set of downlink channel signals to first remote unit. Claim 21 recites that that the "host unit is configured" to transmit a digital representation of a first and second portion of the plurality of carriers to the first remote unit. Petitioner, in *Oh*, relies on DAS hub 26 with a mapping table as the claimed "host unit." Pet. at 56-57. *Oh*, in FIG. 1 (reproduced below), discloses DAS hub 26 that routes incoming traffic from base stations BTS 18 in a coverage segment to DAS antenna units 28, 30 and 32. Ex. 1023 at 2:34-36, 4:33-5:13.

| *Oh* (Ex.1023) FIG. 1 |
| --- |
| 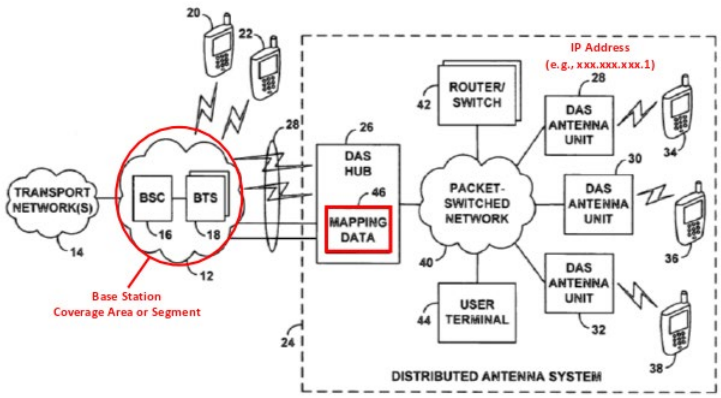  |

Petitioner asserts that each coverage segment corresponds to "different set of downlink channels signals." Pet. at 59. This assertion, however, is not supported in *Oh*. Referring to FIG. 2 (reproduced below), DAS hub 26 stores mapping data 46 used to correlate base station coverage segments to IP addresses of DAS antenna units. *Id*. at 34-48. *Oh* teaches that a coverage segment "uses a *particular carrier frequency* and/or a particular spreading code." Ex. 1023 at 4:54-56 (emphasis added). The '178 patent, in contrast, discloses a host unit (DAU 105) that changes the number or sets of downlink channel signals for transmission at a digital remote unit ("DRU") at different points in time. Ex. 1001 at Abstract, 14:14-27.

*Oh* (Ex.1023) FIG. 2

| DAS MAPPING DATA | |
|---|---|
| RAN COVERAGE SEGMENT(S) | DAS ANTENNA UNIT IP ADDRESS(ES) |
| A | xxx.xxx.xxx.1, xxx.xxx.xxx.2, xxx.xxx.xxx.3, xxx.xxx.xxx.6 |
| B | xxx.xxx.xxx.5 |
| C | xxx.xxx.xxx.4 |

FIG. 2

In *Oh*, for example, incoming traffic from coverage segment C is received, and then DAS hub 26 sends that incoming traffic to DAS antenna unit having the IP address xxx.xxx.xxx.4. For incoming traffic, *Oh* discloses that "DAS hub 26 may then convert the incoming traffic to a digitized bit stream if necessary, packetize the bit stream into a sequence of IP packets, and transmit those packets" to the DAS antenna units. *Id*. at 8:7-11. There is no support in *Oh* that a digitized bit stream of incoming traffic from a coverage segment represents a set of downlink channel signals.

Petitioner also does not show in *Oh* that DAS hub 26 sends a first set of downlink channel signals to a DAS antenna unit, *e.g.*, at IP address xxx.xxx.xxx.4, at a first time for output at its antenna and then sends a second set of downlink signals **to the same DAS antenna unit** at a second time for output at its antenna. Instead,

Petitioner argues that mapping data can change, but does not show how changing the mapping data in *Oh* outputs different sets of downlink channel signals at different times to the same DAS antenna unit at the same IP address. Pet. at 59-60. *Oh* simply does not disclose digital representations of downlink channel signals, let alone dividing these digital representations into two sets and sending them at two different time for output a DAS antenna unit. Petitioner has failed to meet its burden that *Oh* discloses these elements of the challenged claims.

**b. *Oh* fails to disclose "wherein a number of downlink channel signals in the first set of downlink channels is *different* from a number of downlink channel signals in the second set of downlink channel signals"**

These terms are recited in claims 1, 10, and 15. Claim 21 recites that "the first portion being different than the second portion." For these terms, Petitioner argues that mapping data can be changed to add or remove coverage segment correlations to a DAS antenna unit, such that the DAS antenna unit is correlated with a different number of RAN coverage segments. Pet. at 64. This argument is flawed because *Oh* does not teach and Petitioner cites no teaching that a RAN coverage segment in *Oh* provides a "set of downlink channel signals," or that DAS hub 26 sends digital representations of first and second sets of downlink channel signals at a first time and a second time for output at the same DAS antenna unit—and the number of downlink channel signals is different in the first and second sets. *Oh* only teaches

that a coverage segment "uses a *particular carrier frequency* and/or a particular spreading code." Ex. 1023 at 4:54-56. Petitioner has not met its burden to show that *Oh* discloses these elements of the challenged claims.

2. Ground 7: *Oh* in view *Wu* fails to render claims 1-8, 10-11, 13, 15-19, 21, and 23-24 obvious

Petitioner's attempt to combine its two primary references does not remedy the standalone defects in either *Wu* or *Oh*, as noted above with respect to the challenged claims. That is, even if *Wu* and *Oh* are combined, the combination still fails to disclose or suggest a "host unit" that is "configurable" or "configured" to send **different sets and different numbers** of downlink channel signals at a **first time** and a **second time** for output at an antenna of the **same remote unit**. Again, this is likely why the Office allowed the challenged claims over *Oh* and *Wu* during prosecution of the '178 patent, and the Board should defer to Office's finding here.

First, *Oh* teaches that a coverage segment "uses a particular carrier frequency and/or a particular spreading code." Ex. 1023 at 4:54-56. *Oh* does not teach that a coverage segment provides sets of downlink channel signals. Petitioner offers *Wu* for "using a combiner/splitter to select 'individual' or 'groups' of the carrier channel and routing the carrier channels individually or combined to the remote units." Pet. at 84. But this does not cure *Oh*'s deficiencies, because a coverage segment in *Oh* is not described to provide digital representations of sets of downlink channel

signals. Rather, *Oh* is concerned only with routing incoming traffic from coverage segment to DAS antenna units. Because *Oh* never contemplates sending digital representations of sets of downlink channel signals, *Wu*'s ability to "split" a composite signal still leaves *Oh* with no contemplation of sending digital representations of sets of downlink channel signals to the same remote unit.

*Second*, Petitioner does not provide a reasonable motivation to combine *Oh* with *Wu*. Petitioner argues that "Wu's 'fine grained control' would provide further flexibility, granularity, and control over the routing in Oh." Pet. at 84. But *Oh* discusses only the routing of incoming traffic using a mapping table, and does not discuss a need to split a composite signal. Petitioner argues that "Wu's fine grained control enables [Oh's] routing to be changed when desired," but never explains why this is true, or how it would improve on *Oh*'s system of routing according to associations with channel frequencies. Pet. at 84. To this point, Petitioner argues that "Oh and Wu are similar devices (they are both digital distributed communication systems that route signals," but fails to mention they route traffic in a different manner or why a POSA would find it obvious to combine two systems with different routing systems. Pet. at 85. Thus, Petitioner has failed to provide a valid motivation to combine *Oh* with *Wu*.

## VII. CONCLUSION

For the foregoing reasons, the Board should reject Grounds 1-7 and deny institution of *inter partes* review of the '178 patent.

Respectfully Submitted,

Dated: December 17, 2020

*/S. H. Michael Kim/*

S.H. Michael Kim (Reg. No. 40,450)
David D. Schumann (Reg. No. 53,569)
Michael C. Saunders (Reg No. 75,044)
Cliff Win, Jr. (*pro hac vice applied for*)
Folio Law Group, PLLC
14512 Edgewater Lane NE
Lake Forest Park, WA 98155
Tel: (206) 512-9051

(Case No. IPR2020-01473)

*Attorneys for Petitioner*

**CERTIFICATION UNDER 37 C.F.R. § 42.24(d)**

Under the provisions of 37 C.F.R. § 42.4(d), the undersigned hereby certifies that the word count for all portions of the foregoing Petition for *Inter Partes* Review totals 13,207 words per Microsoft Word, which complies with the requirement of 14,000 words allowed under 37 C.F.R. § 42.24(b)(1).

Respectfully submitted,

Date: December 17, 2020

By: */S. H. Michael Kim/*

S. H. Michael Kim (Reg. No. 40,450)
Folio Law Group PLLC
Email: michael.kim@foliolaw.com
Tel: (206) 512-9051

*Attorney for Patent Owner*

## CERTIFICATE OF SERVICE

As authorized by Petitioner's Mandatory Notice, I hereby certify that on December 17, 2020, a copy of this document has been served in its entirety by electronic mail on Petitioner's lead and backup counsel.

Philip P. Caspers
*pcaspers@carlsoncaspers.com*

Samuel A. Hamer
*shamer@carlsoncaspers.com*

Date: December 17, 2020

By: */S. H. Michael Kim/*

S. H. Michael Kim (Reg. No. 40,450)
Folio Law Group PLLC
Email: michael.kim@foliolaw.com
Tel: (206) 512-9051

*Attorney for Patent Owner*