IN THE UNITED STATES PATENT AND TRADEMARK OFFICE

BEFORE THE PATENT TRIAL AND APPEAL BOARD

ERICSSON INC.
Petitioner,

v.

DALI WIRELESS, LLC
Patent Owner.

U.S. Patent No. 11,006,343

Title: DISTRIBUTED ANTENNA SYSTEM

Inter Partes Review No.: IPR2022-01345

CORRECTED DECLARATION OF HENRY HOUH, PH.D.
IN SUPPORT OF
PETITION FOR INTER PARTES REVIEW OF
U.S. PATENT NO 11,006,343.

Table of Contents

I. INTRODUCTION 4

II. QUALIFICATIONS 6

III. RELEVANT LEGAL STANDARDS 11

IV. BACKGROUND 15

A. Summary of the ’343 Patent 15

B. Claim Construction 20

C. Priority Date of the Challenged Claims 21

D. Person of Ordinary Skill in the Art 21

E. State of the Art 22

1. Prior Art DAS 22

2. Allocation of carriers at remote radio units based on loading 23

3. Prior art DAS systems allowed for efficient use of infrastructure 25

V. IDENTIFICATION OF CHALLENGES 26

A. The Prior Art 26

1. Wu (EX-1007) 26

2. Cannon (EX-1017) 27

VI. IDENTIFICATION OF HOW THE CHALLENGED CLAIMS ARE UNPATENTABLE 27

A. Ground 1: Claims 1-3, 5-10, 12-14, and 16-21 Are Obvious Over Wu in View of the Knowledge of a POSA 27

1. The Wu Reference 27

2. Detailed Application of Wu to Claims 1-3, 5-10, 12-14, and 16-21 31

a. Claim 1 31

b. Claim 2 43

c. Claim 3 44

d. Claim 5 45

e. Claim 6 52

f. Claim 7 53

g. Claim 8 54

h. Claim 9 55

i. Claim 10 56

j. Claim 12 58

k. Claim 13 59

l. Claim 14 59

m. Claim 16 59

n. Claim 17 60

o. Claim 18 60

p. Claim 19 60

q. Claim 20 60

r. Claim 21 61

B. Ground 2: Claims 4, 11, 15, 22 Are Obvious Over Wu and Cannon 61

1. The Cannon Reference 61

2. A POSA Would Combine the Teachings of Wu and Cannon 66

3. Detailed Application of Wu and Cannon to Claims 4, 11, 15, and 22 69

a. Claim 4 69

b. Claim 11 72

a. Claim 15 75

c. Claim 22 75

CONCLUSION AND DECLARATION I

APPENDIX A – MATERIALS RELIED UPON ..... A

APPENDIX B – CURRICULUM VITAE ..... B

I, Henry Houh, declare as follows:

I. INTRODUCTION

1. I am over the age of eighteen (18) and otherwise competent to make this Declaration.

2. I have been retained by Ericsson, Inc. (Petitioner) as an independent, technical expert consultant in this proceeding before the United States Patent and Trademark Office (USPTO). I am being compensated at my rate of $680 per hour for my services. No part of my compensation is dependent on my opinions or on the outcome of this proceeding. I have no financial interest in any of the parties to this proceeding.

3. This Declaration is in support of the Petition for *inter partes* review involving U.S. Patent 11,006,343 (the "'343 Patent" or "the Patent") (EX-1001), entitled "Distributed Antenna System" and listing, Shawn Stapleton, Paul Lemson, Bin Lin, and Albert Lee as the inventors.

4. For the purposes of this *inter partes* review as I discuss later, I have been instructed to assume that the effective filing date of the Claims of the '343 Patent challenged by the Petitioner in this *inter partes* review is no earlier than February 7, 2011.

5. I understand that, according to USPTO records, the ’343 Patent is currently assigned to Dali Wireless, Inc. (“Dali Wireless” or “Patent Owner”). I assume for purposes of this proceeding that Dali Wireless is the patent owner.

6. The ’343 Patent is generally directed to wireless communication systems employing Distributed Antenna Systems (DAS). I am familiar with the technology described in the ’343 Patent as of the earliest possible priority date of February 7, 2011, the filing date of Provisional Application No. 61/439,940.

7. In preparing this Declaration, I have reviewed the ’343 Patent (EX-1001) and its prosecution history (EX-1013), as well as the patents and documents cited herein, and I have considered these documents in light of the general knowledge in the art as of February 7, 2011. In formulating my opinions, I have relied upon my experience in the relevant art. I have also considered the viewpoint of a person of ordinary skill in the art (“POSA”) in the relevant field, as of February 7, 2011, who I describe below (§ IV.D). For convenience, the materials I considered in arriving at my opinions are listed in Appendix A.

8. I have been asked to provide my technical expertise, analysis, insights and opinions regarding the ’343 Patent and relevant references that form the basis of the arguments set forth in the accompanying Petition for *inter partes* review of the ‘343 Patent. As described in detail below, I offer the following opinions in this Declaration:

- A POSA would have found Claims 1-3, 5-10, 12-14, and 16-21 of the ’343 Patent to be obvious over *Wu* in view of a POSA would have been motivated to combine the teachings of these references.
- A POSA would have found Claims 4, 11, 15, and 22 of the ’343 Patent to be obvious over *Wu* in view of *Cannon* and a POSA would have been motivated to combine the teachings of these references.

9. Unless otherwise indicated, the emphasis in quotations has been added.

II. QUALIFICATIONS

10. My qualifications for forming the opinions set forth in this declaration are summarized here and explained in more detail in my *curriculum vitae*, which is included as Appendix B. Appendix B also includes a list of my publications and patents.

11. I received a Ph.D. in Electrical Engineering and Computer Science from the Massachusetts Institute of Technology ("MIT") in 1998. I also received a Master of Science degree in Electrical Engineering and Computer Science in 1991, a Bachelor of Science degree in Electrical Engineering and Computer Science in 1989, and a Bachelor of Science Degree in Physics in 1990, all from MIT.

12. For the last 13 years I have been self-employed as an independent technical consultant which specializes in, among other things, in Web Site Development, Data Networking, Optical Networking, Telecommunications, and Media Streaming. My clients include almost every major law firm in the country.

13. My Career in the area of telecommunications began 1987 when I worked at AT&T Bell Laboratories as part of a five-year dual degree program at MIT. Later, as part of my doctoral research at MIT from 1991-1998, I was a research assistant in the Telemedia Network Systems (TNS) group at the Laboratory for Computer Science. The TNS group built a high-speed gigabit network and created applications that ran over the network. Example applications included ones for remote video capture, processing, and display of video on computer terminals. In addition to working on the design of core

network components, designing and building the high speed links, and designing and writing the device drivers for the interface cards, I also set up the group's web server. Furthermore, because our group focused on real-time software processing of live streamed data, some members of our group focused on research in software radios, which was thus commonly discussed in meetings and casual conversations. One of my labmates, Vanu Bose, went on to found Vanu, Inc., a software radio company focused on low cost base stations for rural cell carriers. Several members of our group joined Vanu's company and I continued to meet with Vanu and members of his company. Thus, I became aware of the architectures around software radios starting in the late 1990's.

14. I defended and submitted my Ph.D. thesis, titled "Designing Networks for Tomorrow's Traffic," in January 1998. As part of my thesis research, I analyzed local-area and wide-area flows to show a more efficient method for routing packets in a network, based on traffic patterns at the time.

15. From 1997 to 1999, I was a Senior Scientist and Engineer at NBX Corporation, a start-up that made business telephone systems for streaming packetized audio over data networks instead of using

traditional telephone lines. NBX was later acquired by 3Com Corporation, and the phone system is still used today by numerous businesses. As part of my work at NBX, I designed the core audio reconstruction algorithms for the telephones, as well as the packet transmission algorithms. I also designed and validated the core packet transport protocol used by the phone system. The protocol was used for all signaling in the phone system, including for the setup of conference calls. The NBX system also featured a computer interface for initiating phone calls, which could also initiate conference calls. The NBX system also supported TAPI, the Telephony Application Programming Interface, thus allowing other computer programs to integrate with our system telephony features. We obtained U.S. Patent No. 6,697,963, entitled "Telecommunication method for ensuring on-time delivery of packets containing time-sensitive data," as a result of part of this work.

16. From 1999-2004, I was employed by Empirix or its predecessor company, Teradyne. Empirix was a leader in test tools for telecommunications protocols and systems, providing functional testing tools as well as load testing tools. From 2000-2001, I conceived and built a test platform for testing Voice- over-IP (VoIP).

The first application on this new test platform was a cloud emulator for simulating the effects of transmitting VoIP over a busy network.

17. In 2006, as part of my role at BBN Technologies, I helped found PodZinger Inc., now known as RAMP Inc. PodZinger utilized BBN's speech recognition algorithms to search through the spoken words in audio and video segments. While I was Vice President of Operations and Technology, PodZinger followed its initial prototype with a full streaming audio and video search solution.

18. Furthermore, I have served as expert witness in over 140 patent-related cases where I wrote expert reports and testified in over 80 depositions on topics such as network communications and telecommunications, including Internet protocols, streaming media, and mobile wireless technologies. I have testified in Federal courts, the PTAB, and the ITC on behalf of leading companies such as Amazon, AT&T, Cisco Systems, Google, Microsoft, Comcast, Time Warner Cable, Samsung, and Apple.

19. I have been awarded several United States patents, including the following examples:

U.S. Pat. No.	Title
7,975,296	Automated security threat testing of web pages

7,877,736	Computer language interpretation and optimization for server testing
7,801,910	Method and apparatus for timed tagging of media content
7,590,542	Method of Generating Test Scripts Using a Voice-Capable Markup Language
7,860,999	Distributed computation in network devices
6,967,963	Telecommunication method for ensuring on-time delivery of packets containing time-sensitive data
7,359,993	Method and apparatus for interfacing external resources with a network element

20. Based on my above-described over three decades of experience in network resource allocation and the acceptance of my publications and professional recognition by societies in my field, I believe that I am qualified to be an expert in the field of wireless technology.

21. Based on my experience described above, and as indicated in my *curriculum vitae*, I am qualified to provide the following opinions with respect the patents in this case. Additionally, I am at least a person having ordinary skill in the art as of the priority date of the ’343 Patent.

III. RELEVANT LEGAL STANDARDS

22. I do not provide any legal opinions in this Declaration. I have been informed and understand that certain legal standards are to be applied by technical experts in forming opinions regarding the

meaning and validity of patent claims. I have been asked to provide my opinions regarding whether the claims of the ’343 Patent would have been obvious to a person having ordinary skill in the art at the time of the alleged invention, in light of the prior art.

23. Further, I have been informed and understand that a patent claim is not patentable as obvious (a requirement I understand to be governed by a statute, 35 U.S.C. § 103) if the differences between the patent claim and the prior art are such that the claimed subject matter as a whole would have been obvious at the time the claimed invention was made to a person having ordinary skill in the relevant art. Obviousness, as I have been informed and understand, is based on the scope and content of the prior art, the differences between the prior art and the claim, the level of ordinary skill in the art, and, to the extent that they exist, certain objective indicia of non-obviousness.

24. I understand that objective indicia can be important evidence regarding whether a patent is obvious or nonobvious, if it has an appropriate nexus to the claimed invention, i.e., is a result of the merits of a claimed invention (rather than the result of design needs or market-pressure advertising or similar activities). Such indicia include: commercial success of products covered by the patent

claims; a long-felt need for the invention; failed attempts by others to make the invention; copying of the invention by others in the field; unexpected results achieved by the invention as compared to the closest prior art; praise of the invention by the infringer or others in the field; the taking of licenses under the patent by others; expressions of surprise by experts and those skilled in the art at the making of the invention; the patentee proceeded contrary to the accepted wisdom of the prior art, and, the contemporaneous development of the subject matter claimed by others.

25. I have been informed that whether there are any relevant differences between the prior art and the claimed invention is to be analyzed from the view of a person of ordinary skill in the relevant art at the time of the invention. As such, my opinions below as to a person of ordinary skill in the art are as of the time of the invention, even if not expressly stated as such; for example, even if stated in the present tense.

26. In analyzing the relevance of the differences between the claimed invention and the prior art, I have been informed that I must consider the impact, if any, of such differences on the obviousness or non-obviousness of the invention as a whole, not merely some portion

of it. The person of ordinary skill faced with a problem is able to apply his or her experience and ability to solve the problem and also look to any available prior art to help solve the problem.

27. I have been informed that a precise teaching in the prior art directed to the subject matter of the claimed invention is not needed. I have been informed that one may take into account the inferences and creative steps that a person of ordinary skill in the art would have employed in reviewing the prior art at the time of the invention. For example, if the claimed invention combined elements known in the prior art and the combination yielded results that were predictable to a person of ordinary skill in the art at the time of the invention, then this evidence would make it more likely that the claim was obvious. On the other hand, if the combination of known elements yielded unexpected or unpredictable results, or if the prior art teaches away from combining the known elements, then this evidence would make it more likely that the claim that successfully combined those elements was not obvious.

28. I have been informed and understand that there are recognized, exemplary, rationales for combining or modifying references to show obviousness of claimed subject matter. Some of

the rationales include the following: combining prior art elements according to known methods to yield predictable results; simple substitution of one known element for another to yield predictable results; use of a known technique to improve a similar device (method or product) in the same way; applying a known technique to a known device (method or product) ready for improvement to yield predictable results; choosing from a finite number of identified, predictable solutions, with a reasonable expectation of success; known work in one field of endeavor may prompt variations of it for use in either the same field or a different one based on design incentives or other market forces if the variations are predictable to one of ordinary skill in the art; and some teaching, suggestion, or motivation in the prior art that would have led one of ordinary skill to modify the prior art reference or to combine prior art teachings to arrive at the claimed invention.

IV. BACKGROUND

A. Summary of the ’343 Patent

29. The ’343 Patent is titled “Distributed Antenna System” and describes wireless communication systems employing a distributed antenna system (DAS) that is “field reconfigurable” and

purportedly "enables a high degree of flexibility to manage, control, enhance, [and] facilitate the usage and performance of a distributed wireless network." EX-1001, Abstract. According to one embodiment of the described DAS, the system includes "one or more remotely monitored and controlled digital access units configured to assign particular packet transmissions to selected one of a plurality of remote units" which can be "configured in a daisy-chained rings." EX-1001, 1:26-30.

30. The digital access units (DAUs) connect to associated base stations and serve as an interface between the base stations and digital remote units (DRUs). EX-1001, 4:42-46. The DAS receives downlink data via radio frequency (RF) signals from the base stations. EX-1001, 4:65-67. After down-conversion, digitization, and conversion to baseband, the DAUs provide these received signals to DRUs. EX-1001, 5:1-11. Figure 1 of the '343 Patent, reproduced below, illustrates in block diagram form the basic structure of an embodiment and an example of a downlink transport in the illustrated embodiment. EX-1001, 3:60-63.

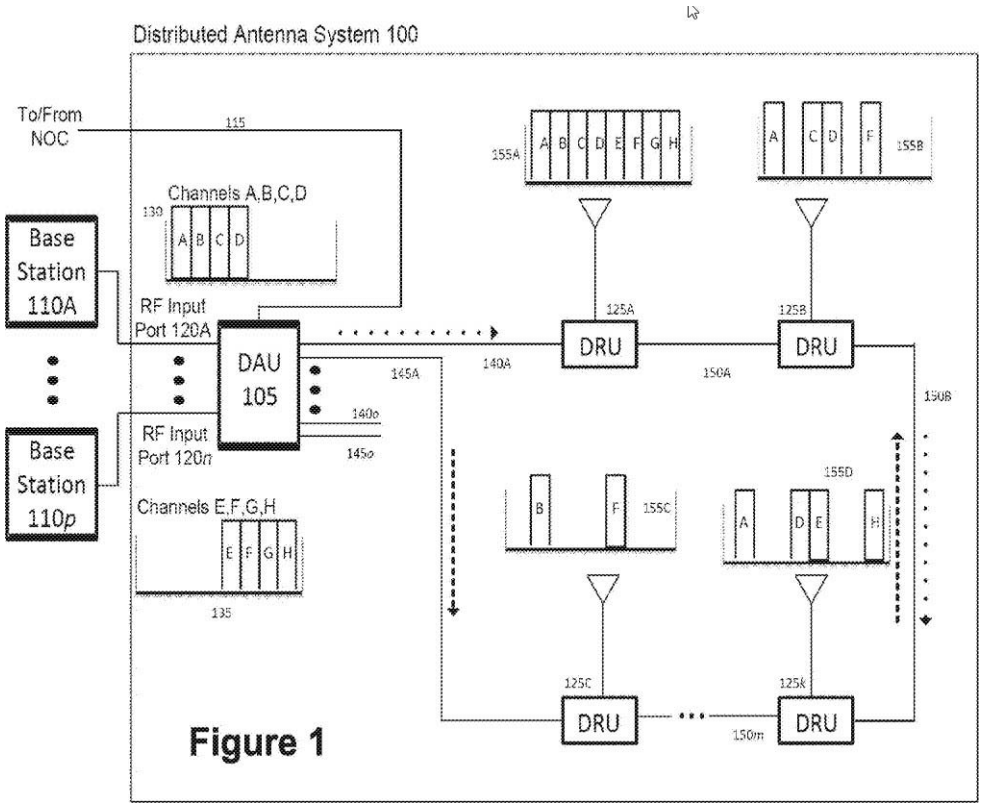

EX-1001, Fig. 1.

31. Figure 1 illustrates an embodiment of DAS 100. EX-1001, 4:33-35. DAU 105 serves as an interface between associated base stations (110A through 110*p*) and a plurality of DRUs (125A through 125k). EX-1001, 4:43-46. The DRUs are connected to the DAU 105 in a ring configuration over optical fiber cable indicated at connection pairs 140A-145A and each DAU can support a plurality of rings through fiber optic pairs 140*o*-145*o*. EX-1001, 5:6-14.

32. As shown in Figure 1, DAU 105 receives composite downlink signal 130, comprising carriers A–D from first base station 110A. EX-1001, 5:64-6:1. DAU 105 also receives composite signal

135, comprising carriers E–H from *p*th base station 110*p*. EX-1001, 6:1-6:4. A first optical output is directed to DRU 125A via bidirectional optical cable 140A, and a second optical output is directed to DRU 125C via bidirectional optical cable 145A. EX-1001, 6:11-14. The DRUs 125A-n are connected in a ring configuration such that all Carriers A-H are available to transport data to all DRUs within the ring. EX-1001, 6:14-22. The antenna ports of the DRUs receive uplink signals and transmit them to the base station via the DAUs. EX-1001, 5:34-47, 10:40-11:25.

33. Software settings within each DRU are configured to control which carrier signals are present in the downlink output signal at the antenna port of a DRU. EX-1001, 6:19-40, 6:47-65. Figure 7, reproduced below, illustrates in block diagram form the interaction between the DAU embedded software module and the DRU embedded software module. EX-1001, 4:19-21.

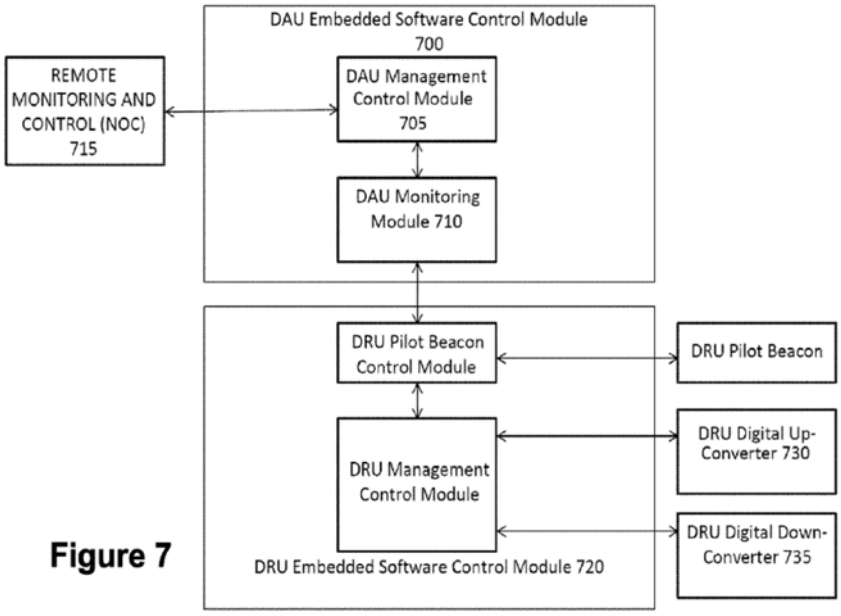

Figure 7

EX-1001, Fig. 7.

34. With reference to Figure 7, an embedded software control module in a DAU, the DAU Management Control Module 705, "determin[es] and/or set[s] the appropriate amount of radio resources (such as RF carriers, CDMA codes or TDMA time slots) assigned to a particular DRU or group of DRUs to meet desired capacity and throughput objectives." EX-1001, 12:3-9. Another embedded software control module, the DAU monitoring module 710, "detects which carriers and corresponding time slots for each carrier are active for each DRU." EX-1001, 12:15-17. The DAU monitoring module 710 also provides information to the DAU Management Control Module 705 to help identify when a particular downlink carrier is

loaded by a percentage greater than a predetermined threshold. EX-1001, 12:50-58. If the threshold is exceeded, "the DAU Management Control Module can adaptively modify the system configuration" to deploy additional radio resources for use by a particular DRU needing those resources, and to remove resources from a DRU if it no longer needs the radio resources assigned to it. EX-1001, 12:58-13:2. The DAU Management Control Module 705 communicates with a DRU Embedded Software Control Module 720 which, in turn, by a DRU Management Control Module 725, sets individual parameters within the DRU to enable or disable specific radio resources from being transmitted by that DRU. EX-1001, 12:17-37.

B. Claim Construction

35. I understand that Petitioner proposes that each claim term in the Challenged Claims be given its plain and ordinary meaning in this proceeding, and I have applied the plain and ordinary meaning in forming my opinion, noting that the prior art relied on in the Petition meets each of the claim terms under any reasonable construction.

36. I understand, the Board in the 1430 proceeding determined that the plain and ordinary meaning of "radio resources" as would have been understood by a person of ordinary skill in the art at the

time of the invention and in the context of the entire patent disclosure: (1) includes RF carriers, CDMA codes, and TDMA time slots; and (2) excludes data that does not incorporate information used in the transmission of the radio resource from an antenna of the remote unit,

C. Priority Date of the Challenged Claims

37. I understand the ’343 Patent is a continuation of the ’499 Patent which is a continuation of the ’178 Patent which, through a series of serial continuation applications, claims the benefit of Provisional Patent Application No. 61/439,940 filed February 7, 2011. I have been instructed to use the claimed priority of February 7, 2011 for the ’343 Patent.

D. Person of Ordinary Skill in the Art

38. With respect to the ’343 Patent, a POSA in February 7, 2011 would have been familiar with operations and carrier allocations in reconfiguring remote radio units in a DAS. A POSA would have gained knowledge of these concepts through a mixture of training and work experience, such as by having a Bachelor’s degree in electrical engineering and four years of experience; or by obtaining a Master’s degree in electrical engineering, but having only one to two years of

experience; or by having no formal education but experience in cellular communications of at least eight years.

E. State of the Art

39. The following section describes the state of the art for DAS networks as of February 2011. The prior art references, and the discussions of what was known to a POSA, provide the factual support for the general description of the state of the art at the time of the invention, and provide additional motivation to modify or combine the references. Accordingly, these references should be considered by the Board.

1. Prior Art DAS

40. A distributed antenna system (DAS) is used to improve the capacity and coverage area of wireless systems, particularly for improving coverage inside buildings and other indoor environments. DAS typically use fiber optic or unshielded twisted pair/shielded twisted pair (UTP/STP) cables to transmit digital radio signals, which typical are digital baseband signals. EX-1016, 1:11-14. The typical DAS configuration is shown below in Fig. 1. As shown in Fig. 1, the Remote radio heads (RRHs), 17, are placed in various locations, such as around a building, and the primary hub, 14, distributes the

downlink radio signals to the RRHs as well as collects the uplink radio signals for the base station 11. EX-1016, 1:15-17. Additionally, as mentioned above, the transmitted signals are digital radio signals, and thus, it is easy to support multiple carriers and multiple base stations at the same time. EX-1016, 1:17-18.

EX-1016, Fig. 1.

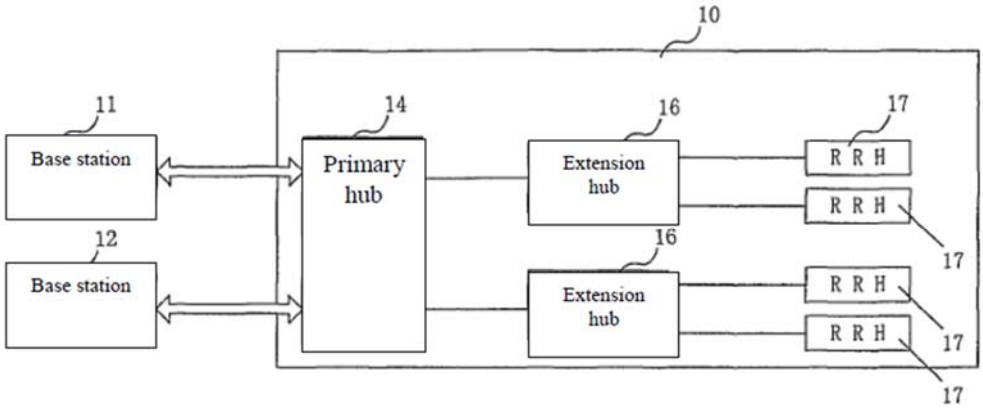

Fig. 1

2. Allocation of carriers at remote radio units based on loading

41. One such prior art DAS allowed dynamic reallocation of the carrier frequencies used by the remote units based on the relative loading of the system as communication traffic of a region changed. EX-1016, 1:33-36. As shown in FIG. 2 below, a cell management device (CMU) 24 acts as the host and is connected to the base station

21, and is configured to distribute a downlink wireless signal to the radio remote unit 26 (RRH), collect an uplink wireless signal, and transmit the uplink radio signal to the base station 21. EX-1016, 3:20-25. CMU 24 also collects load information of the distributed antenna system 20 and reconfigures the distributed antenna system 20 based on the load information. EX-1016, 11:28-31.

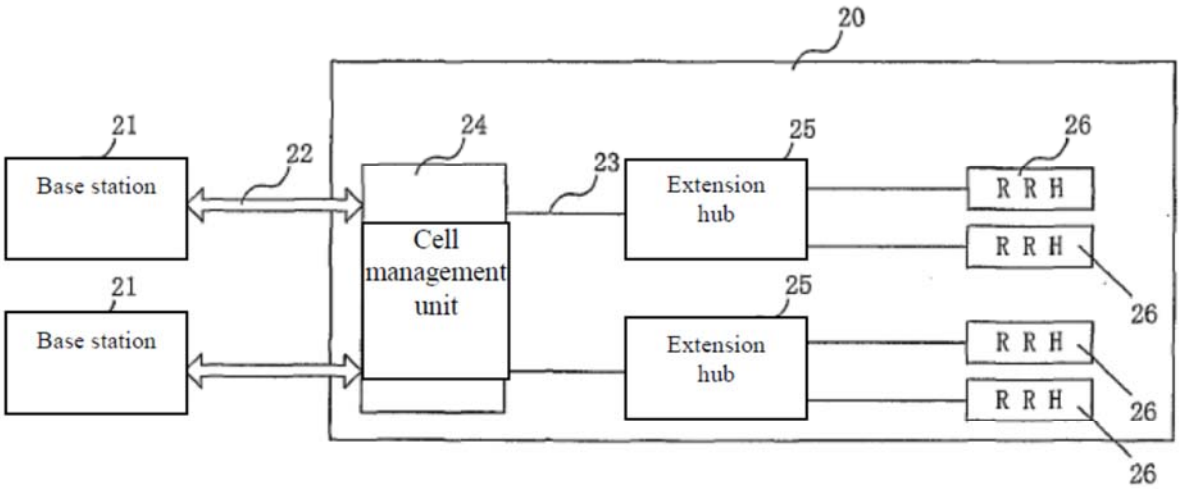

Fig. 2

EX-1016, Fig. 2.

42. As shown the CMU 24 could serve multiple base stations 21, similarly several CMU could serve a base station. The transmissions between CMUs and the base stations preferably occur

according to suitable standards such as the CPRI Standard (EX-1010). EX-1016 3:26-33.

3. Prior art DAS systems allowed for efficient use of infrastructure

43. Another prior art system shown below allowed multiple service providers each to provide signals to a BTS which is in turn sent to a common DAS Head End (*DAU*).

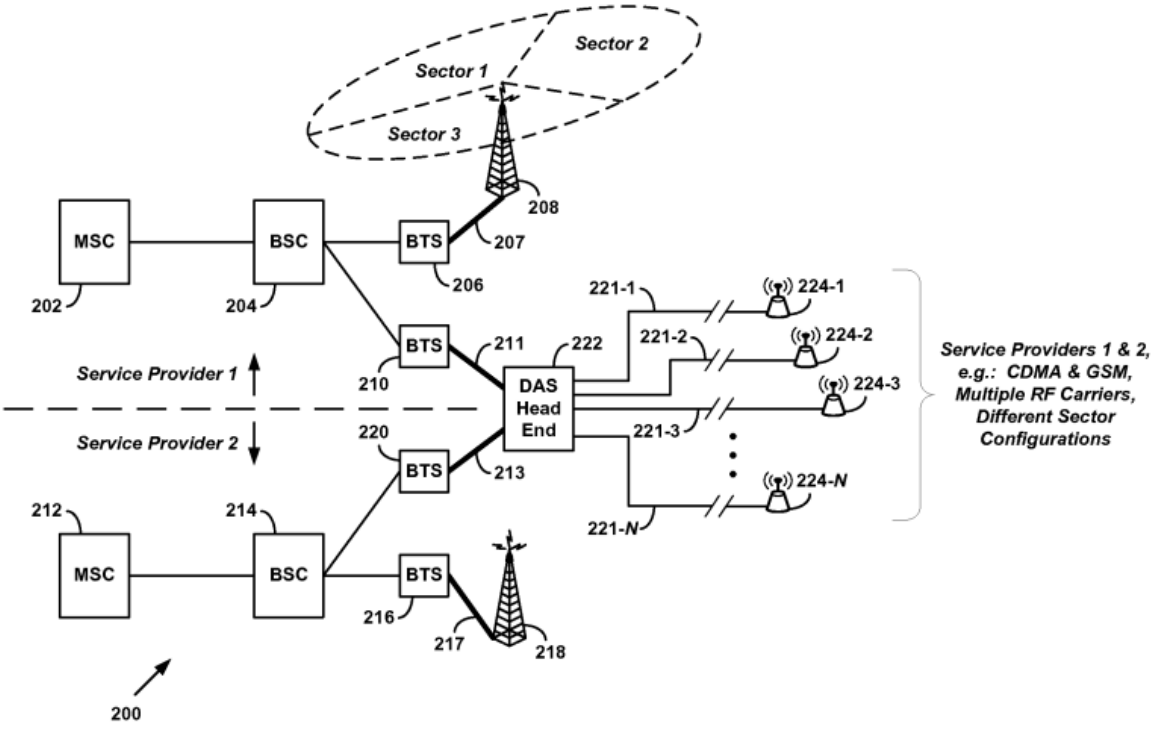

FIG. 2

EX-1018, Fig. 2.

The interface between the RF module and the DAS head end is same as that between the RF modulation

> Subsystem and the radio/antenna Subsystem of a traditional BTS. **As such, multiple BTSs from multiple service providers can be connected to single DAS head end, thus allowing them to share a common access infrastructure**.

EX-1018, 2:24-29 (emphasis added).

44. As illustrated in FIG. 2, multiple service providers or operators using different communications protocols (e.g., CDMA, GSM, etc.) could share common infrastructure resources and thus avoid the cost and complexity of each provider proving its own infrastructure.

V. IDENTIFICATION OF CHALLENGES

45. The Challenges are set forth in detail below and summarized as follows:

Ground	Claims	Basis	Reference(s)
1	1-3, 5-10, 12-14, and 16-21	§ 103	Wu in view of the knowledge of a POSA
2	4, 11, 15, and 22	§ 103	Wu in view of Cannon

A. The Prior Art

1. Wu (EX-1007)

46. U.S. Patent Application Pub. No. 2010/0128676 published May 27, 2010 from an application filed November 11, 2009. I have been informed that Wu qualifies as prior art at least under § 102(e).

2. Cannon (EX-1017)

47. Cannon published on July 15, 2010 from an application filed January 13, 2010 (EX-1017). I have been informed that Cannon qualifies as prior art at least under §102(e).

VI. IDENTIFICATION OF HOW THE CHALLENGED CLAIMS ARE UNPATENTABLE

A. Ground 1: Claims 1-3, 5-10, 12-14, and 16-21 Are Obvious Over Wu in View of the Knowledge of a POSA

1. The Wu Reference

48. Wu is titled "Carrier Channel Distribution System" and describes a system for transporting wireless communications where base transceiver stations (BTSs) communicate signals to remote transceiver units (RTUs) via one or more host units. EX-1007, Title, ¶0030. The system provides control over the communication by splitting carrier channels from their bands and routing only selected channels to RTUs according to a routing policy. EX-1007, ¶0009. The carrier channels may be routed "individually, collectively as shown, or in arbitrary groups" to RTUs as desired using a matrix switch according to a routing policy, where the routing policy can be

updated or reconfigured as desired. EX-1007, ¶¶0049, 0009, 0011, 0038-39, 0047. Wu discloses that "more channels" can be allocated when needed to increase the bandwidth available in a particular region. EX-1007, ¶¶0039-46.

49. Wu provides a schematic of the system in Figure 1:

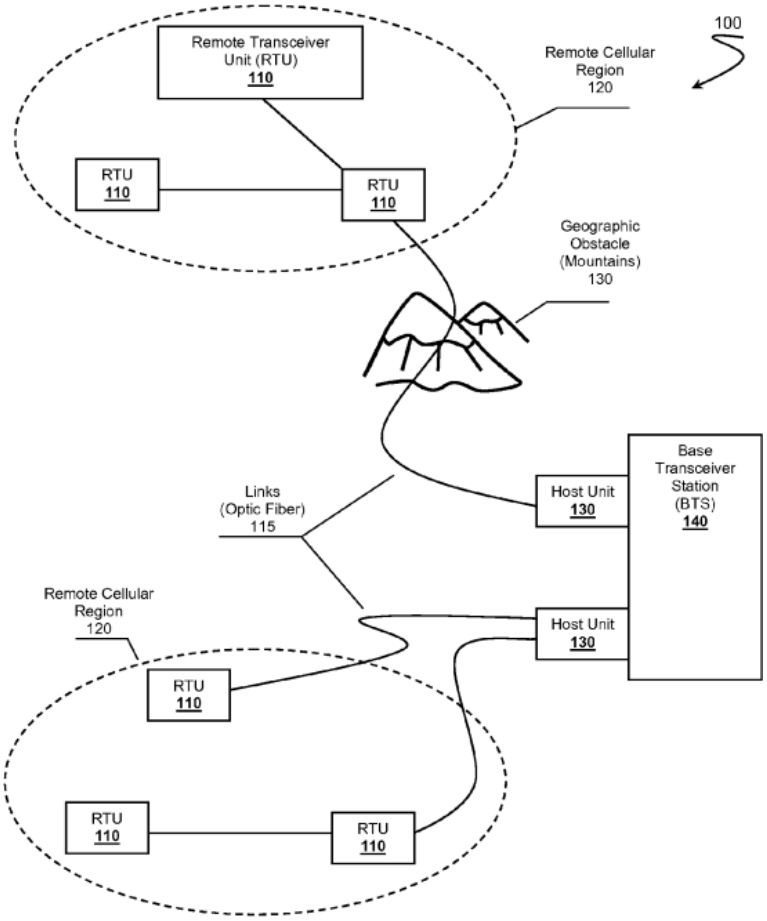

Figure 1

EX-1007 Fig. 1.

50. Wu also provides a schematic of a BTS in Figure 2:

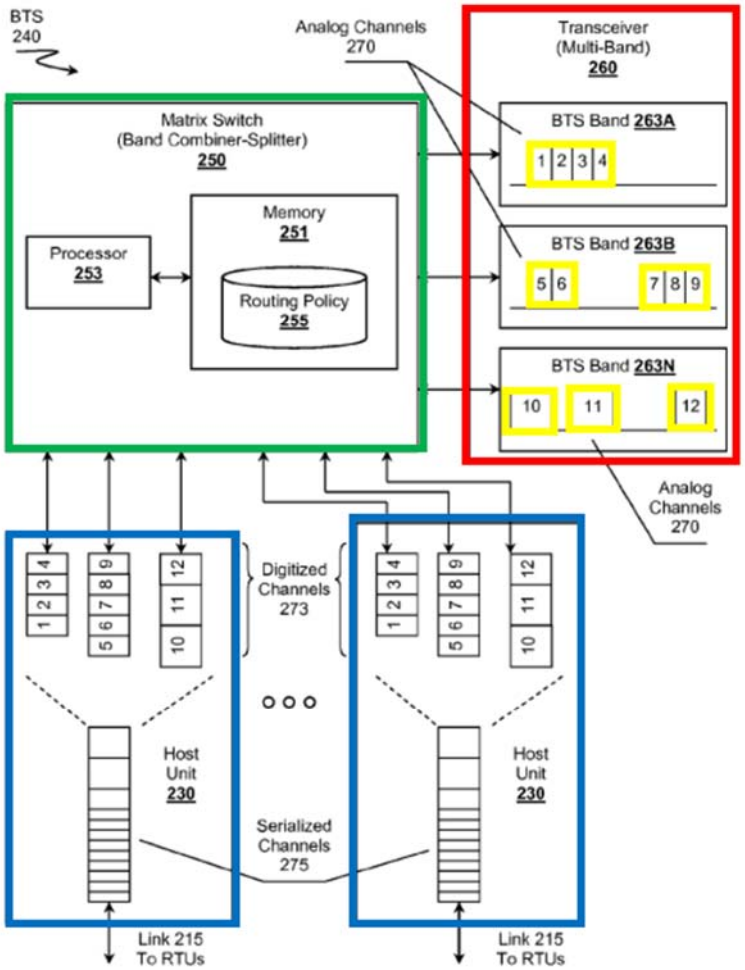

Figure 2

EX-1007 Fig. 2.

51. Figure 2 illustrates base transceiver station (BTS) 240 comprising transceiver 260 (outlined in red), matrix switch 250 (outlined in green), and host units 230 (outlined in blue). EX-1007, ¶¶0015, 0034–36. Transceiver 260 receives signals on BTS bands

263A - 263N, and each band may include multiple analog channels 270 (outlined in yellow). EX-1007, ¶¶0035-37. Transceiver 260 forwards the received channels 270 to matrix switch 250 that routes the channels to host unit 230 according to Routing Policy 255. Host unit 230 further distributes the signals to RTUs over links 215. EX-1007, ¶0038. Transmissions between host units and RTUs are disclosed as preferably occurring according suitable standards such as the CPRI Standard. EX-1007, ¶¶0031, 0049.

52. The system is bi-directional, and carrier channel signals are received by host units 230 from RTUs and forwarded to transceiver 260 for transmission within bands 263. EX-1007, ¶¶0036, 0049. Wu alsodiscloses that some signals may be received at an RTU with another RTU acting as intermediary. EX-1007, Figs. 1, 4, ¶¶0033, 0051.

53. Policy 255 can be reconfigured to change the routing of channels to the one or more RTUs. EX-1007, ¶¶0048-49. For example, channels may be routed, allocated, or distributed based on anticipated requirements of remote regions during a certain time of day, or based on current traffic load within the region. EX-1007, ¶¶0043-44.

2. Detailed Application of Wu to Claims 1-3, 5-10, 12-14, and 16-21

a. Claim 1

i. [1.pre] *A system to transport wireless communications, comprising:*

54. Wu discloses a system to transport wireless communications. Wu is directed to "wireless carrier channel technologies" including "apparatus, systems and methods in which a carrier channel distribution system can route individual carrier channels to Remote Transceiver Units (RTUs)." EX-1007, ¶¶0002, 0011.

55. Wu provides a schematic of the system in Figure 1 showing how wireless communication signals are transported from BTS 140 and Host Unit 130 [*signal source and baseband unit*] to RTUs 110 [*remote units*].

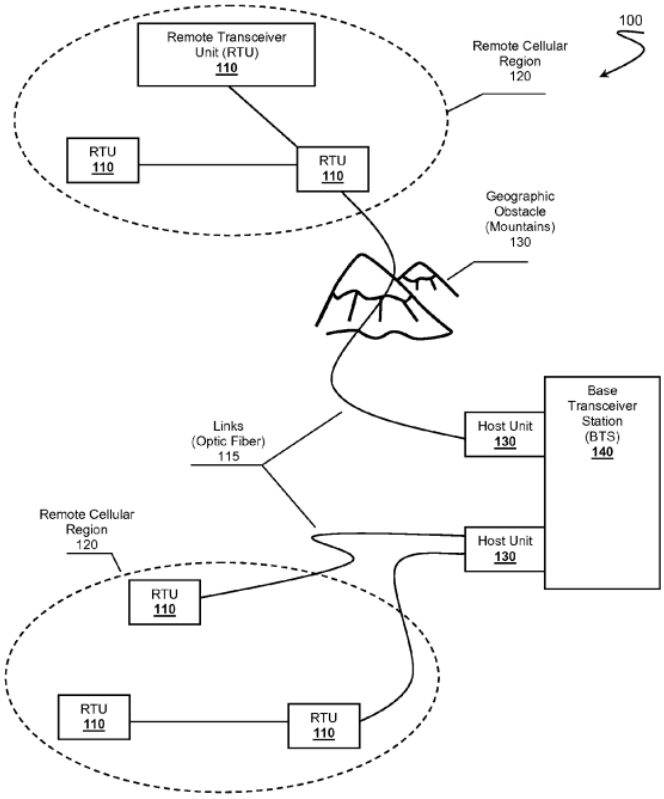

Figure 1

EX-1007 Fig. 1.

ii. **[1.a]** ***a digital access unit***;

56. Wu discloses a digital access unit in the form of a matrix switch 250 and host units 230. Wu provides a schematic of a base transceiver station (BTS) in Figure 2:

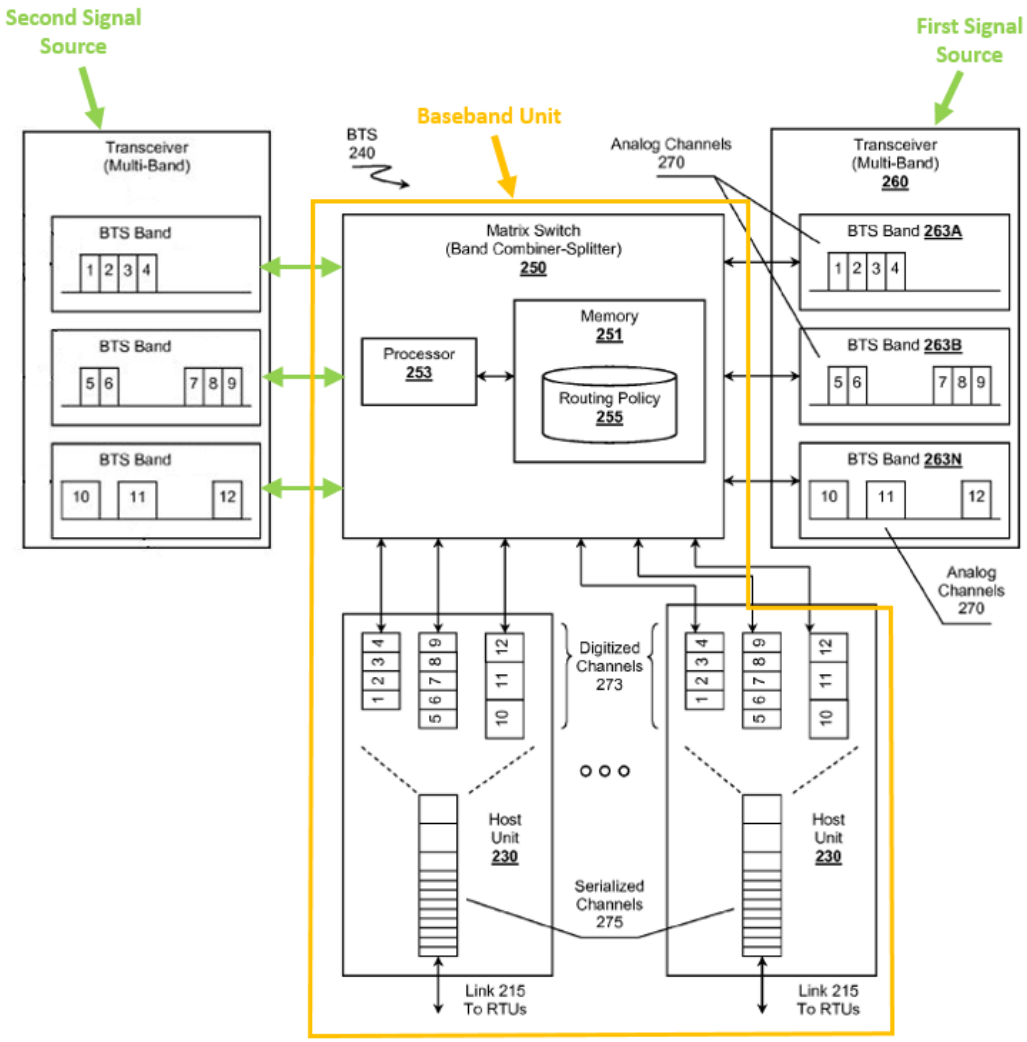

Figure 2

EX-1007, Fig. 2 (annotated).

57. The BTS 240 comprises transceiver 260, matrix switch 250, and host units 230. EX-1007, ¶0015, Fig. 2. The combination of matrix switch 250 and host units 230 form a system [*digital access unit*] that manages two-way communications between the RTUs 110 [*remote units*] and the transceiver 260 [*signal source*]. EX-1007,

¶¶0035-38. The matrix switch and host units together disclose the *digital access unit* recited in the Challenged Claims.

58. In fact, the Board has already determined that the matrix switch 250 and host units 230 of Wu disclose the digital access unit or "host unit" recited in the claims of the parent '178 Patent. Specifically, the Board found "Wu discloses the claimed host unit [*digital access unit*] as a combination of the matric switch and host units" and that "it would have been obvious to place the functionality of both Wu's matrix switch and host units in a single unit." EX-1006, 21-22; EX-1004, 28.

59. The "host unit" recited in the claims of the '178 Patent is the same element as the "*digital access unit*" recited in the Challenged Claims. Thus Wu discloses the claimed digital access unit.

iii. **[1.b]** ***a plurality of signal sources, including at least a first signal source and a second signal source***;

60. Wu discloses a plurality of signal sources, including at least a first signal source and a second signal source. As illustrated in annotated Fig. 2 above, Wu discloses a BTS 240 comprising transceiver 260 [*signal source*]. Wu explains that "multi-band transceiver 260 is preferably configured to receiver [sic] or to transmit

wireless signals within a plurality of frequency bands as represented by bands 263A, 263B, through 263N" and that "[e]ach of bands 263 preferably comprises multiple channels." EX-1007, ¶0035. Wu further explains that "BTS 240 can be coupled to more than one of multi-band transceiver 260." EX-1007, ¶0034. Fig. 2 has been annotated to illustrate the disclosed by Wu wherein the BTS 240 is coupled to a first and a second transceiver 260 [*at least a first signal source and a second signal source*].

iv. **[1.c]** ***a plurality of remote units, including at least a first remote unit and a second remote unit***;

61. Wu discloses a plurality of remote units, including at least a first remote unit and a second remote unit. As illustrated in Fig. 1 above and Fig. 4 below, Wu discloses a system 100 comprising a plurality of RTUs 110 [*a first remote unit and a second remote unit*]. EX-1007, Fig. 1, ¶¶0031-33.

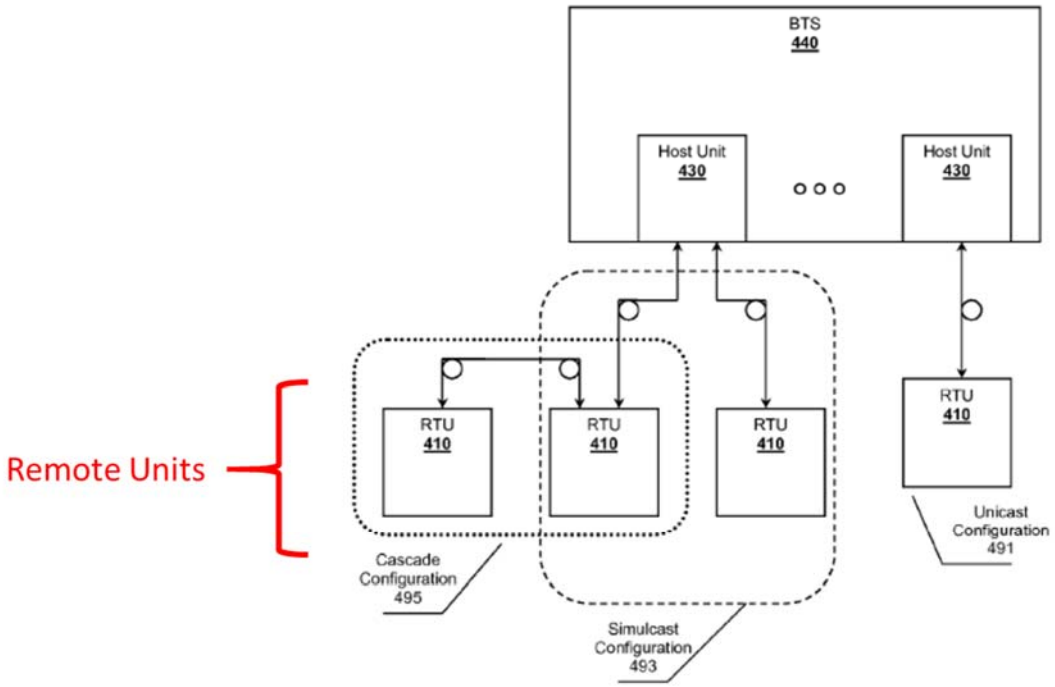

Figure 4

EX-1007, Fig. 4 (annotated).

v. **[1.d]** ***wherein the digital access unit comprises a plurality of interfaces to communicatively couple the digital access unit to the plurality of signal sources***;

62. Wu discloses the digital access unit comprising a plurality of interfaces to communicatively couple the digital access unit to the plurality of signal sources. Wu discloses that matrix switch 250 (a component of the digital access unit) is communicatively coupled to a plurality of BTS Bands 263A-263N from each of the first and second

transceivers 260 and a POSA understood that each communication coupling includes an interface. EX-1007, ¶0042, Fig. 2. Thus, the digital access unit, which includes matrix switch 250, comprises a plurality of interfaces to communicatively couple the digital access unit to a plurality of signal sources.

vi. **[1.e]** ***wherein the digital access unit is configured to receive a plurality of radio resources from the first signal source and the second signal source***;

63. Wu discloses a system where the digital access unit is configured to receive a plurality of radio resources from the first signal source and the second signal source. As illustrated in the annotated Fig. 2 above, the matrix switch 250 receives analog channels 270 [*radio resources*] including channels 1-12 from each of the BTS Bands 263 of the first and second transceivers 260. EX-1007, ¶¶0035-38, Fig. 2. A POSA understood that the carrier channels 1-12 are radio resources as recited in the Challenged Claims.

vii. **[1.f]** ***wherein the digital access unit is configured to send a digital representation of a first set of radio resources to the first remote unit at a first point in time, the first set of radio resources for transmission at an antenna of the first remote unit***;

64. Wu discloses a system where the digital access unit is configured to send a digital representation of a first set of radio resources to the first remote unit at a first point in time, the first set of radio resources for transmission at an antenna of the first remote unit. Wu explains that the combination of matrix switch 250 and units 230 [*digital access unit*] digitize the carrier channels [*radio resources*] and send digital representations of the channels 273 to the RTUs. EX-1007, ¶0049. Wu further explains that matrix switch 250 is configurable to route the digitized channels 273 [*digital representation of radio resources*] "individually, collectively …, or in arbitrary groups" (*a first set*) to a first RTU [*first remote unit*]. EX-1007, ¶0049; EX-1004, p. 28.

65. Wu also describes that the number of channels routed to an RTU may change by means of a routing policy that includes rules for reacting to events and conditions such as usage, load, weather, etc. EX-1007, ¶¶0038-47.

66. As an example, "[t]he rules of policy 255 can include one or more criterion representing a trigger …When the criteria are met, matrix switch 250 can take appropriate routing action." EX-1007, ¶0041. Wu explains that the routing actions may include allocating

more channels to a region to increase the bandwidth available at a first point in time. EX-1007, ¶0046.

67. Wu discloses that the RTUs provide "wireless coverage" to remote cellular regions. EX-1007, ¶¶0030, 0004. A POSA understood that "wireless coverage" requires transmission of communications using an antenna, and that there are antennas associated with each RTU for transmitting radio resources.

viii. **[1.g]** ***wherein the digital access unit is configured to send a digital representation of a second set of radio resources to the first remote unit at a second point in time, the second set of radio resources for transmission at the antenna of the first remote unit***;

68. Wu discloses a system where the digital access unit is configured to send a digital representation of a second set of radio resources to the first remote unit at a second point in time, the second set of radio resources for transmission at the antenna of the first remote unit. As set forth for element [1.f] above, Wu describes a routing policy that includes rules for reacting to various events and conditions. EX-1007, ¶¶0038-47. The routing actions may allocate more channels [*a second set of radio resources*] to an RTU to increase

the bandwidth available in the region of the RTU at a time following the triggering event [*a second point in time*]. EX-1007, ¶0046.

ix. **[1.h]** ***wherein a number of radio resources in the first set of radio resources is different from a number of radio resources in the second set of radio resources at least based on dynamic load balancing and resource management***;

69. Wu discloses a system wherein a number of radio resources in the first set of radio resources is different from a number of radio resources in the second set of radio resources at least based on dynamic load balancing and resource management. Wu explains the routing policy may change the configuration of the system "to allocate more channels" to a first RTU in a region "to increase the bandwidth available" in the region in response to conditions. EX-1007, ¶0046. In such a scenario, the number of channels [*radio resources*] transmitted in the first set prior to the routing policy change is different than the number of channels transmitted in the second set after the change in policy.

70. Wu discloses that the difference in the number of channels is at least based on dynamic load balancing and resource management. Wu teaches that the channels 270 of the system may be "routed or allocated according to policy 255 individually, collectively as shown,

or in arbitrary groups" to the RTUs. EX-1007, ¶0049. Wu also teaches that matrix switch 250 may be configured using the routing policy 255 to dynamically reroute or reallocate the radio resources to the RTUs based on changing network conditions such as traffic rate, a consumed bandwidth, current traffic load, call rate, and load balancing. EX-1007, ¶¶0041-0044.

71. Wu discloses that processor 253 is configurable to analyze traffic metrics (e.g., data rate, call rate, consumed bandwidth, etc.) and that based on analyzing load characteristics, the system may be reconfigured automatically to allocate more or fewer radio resources to an RTU in response to changing circumstances – "when the criteria are met, matrix switch 250 can take appropriate routing action." EX-1007, ¶¶0011, 0044, 0045, 0041.

72. For example, Wu discloses radio resources may be allocated to RTUs based on events such as "weather events, political events, trade shows, sporting events, government or police requests, emergencies or other types of events" such that "sufficient coverage is available as conditions change." EX-1007, ¶0046.

Policy 255 can be configured to route, distribute, or allocate channels 270 collectively, as groups, individually, or in other desirable configurations. Matrix

> switch 250, based on policy 255, can allocate a first carrier channel to a first RTU while a second carrier channel from the same band can be routed to a second RTU. For example channel 1 from band 263A could be routed as an individual, separate from channels 2-4 from band 263A. Channels 5 and 6 could be grouped and routed together to an RTU, or could be split. Furthermore, individual channels from different bands could be split from their bands, and combined together. For example, channel 3 from band 263A could be combined with channel 12 from band 263N, which can then be routed together to an RTU as a group.

EX-1007, ¶0047.

73. A POSA understood from the teachings of Wu that the number of radio resources transmitted to a first RTU at a first point in time (*first set*) would be different from the number of radio resources transmitted to the first RTU at a second point in time (second set) based at least in part on load balancing and system resources.

x. ***and* [1.i] *wherein the digital access unit is configured to receive digital signals from each of the plurality of remote units***.

74. Wu discloses a system where the digital access unit is configured to receive digital signals from each of the plurality of remote units. Wu explains that the system is bi-directional such that

the units 230 (components of the *digital access unit*) may receive digital representations of uplink signals from each of the plurality of RTUs. EX-1007, ¶¶0036, 0049. Wu discloses that the RTUs include analog-to-digital converters for digitizing received signals for digital transport to the host units 230. EX-1007, ¶0056.

b. Claim 2

i. ***The system of claim 1, wherein the system determines load and selects traffic paths based at least in part on the determined load.***

75. Wu discloses or renders obvious a system wherein the system determines load and selects traffic paths based at least in part on the determined load. *See* Claim 1, element [1.h]. Wu discloses "A calculated metric is considered to be a metric that has a value, or multiple values, as derived from a function operating on other metrics." EX-1007, ¶0042. These "calculated" metrics can be, *inter alia*, traffic rate, a consumed bandwidth, and an aggregated count all, all of which are metrics of a load determined by the system (*system determines load*). EX-1007, ¶0042. Wu goes on to disclose the use of policies for routing radio resources such that "sufficient service coverage is available as conditions change." Therefore, Wu clearly *selects traffic paths based at least in part on the determined load*. EX-

1007, ¶0046. This selection of traffic paths based on a determined load is illustrated in ¶0043 where Wu discloses dynamically allocating bandwidth to a region that:

> might have a significant number of commercial businesses that require additional bandwidth during business hours. The first region could be allocated a large number of channels during the business hours while a residential region might have a smaller number of channels during the same time frame.

EX-1007, ¶0043.

76. Furthermore, Wu discloses radio resources may be allocated to RTUs based on events such as "weather events, political events, trade shows, sporting events, government or police requests, emergencies or other types of events." EX-1007, ¶0046.

77. Thus, Wu discloses determines the load by calculating metrics such as bandwidth and traffic rate and then selects traffic paths using routing policies based on, in part, the determined load.

c. Claim 3

i. ***The system of claim 1, wherein the dynamic load balancing and resource management controls routes from a digital access unit port to a remote unit port.***

78. Wu discloses or renders obvious a system wherein the dynamic load balancing and resource management controls routes from a digital access unit port to a remote unit port. Wu discloses the use policies stored as computer instruction in computer memory to configures a matrix switch [*digital access unit*] to properly route carriers to the RTU [*remote unit*]. EX-1007, ¶0040. The policies can configure the Switch matrix to route channels to the RTU collectively, as groups, individually, or in other desirable configurations. EX-1007, ¶0047.

79. A POSA understood from the teachings of Wu that the electrical connection between the Host Unit and the RTU will interface at a port. Thus, Wu discloses or renders obvious a system wherein the dynamic load balancing and resource management controls routes from a digital access unit port to a remote unit port.

d. Claim 5

i. ***The system of claim 1, wherein the dynamic load balancing and resource management uses uplink summing to combine signals from at least the first and second remote units***.

80. Wu discloses or renders obvious a system wherein the dynamic load balancing and resource management uses uplink summing to combine signals from at least the first and second remote

> units. Wu discloses using a Matrix switch 250, to route the carrier channels from the multiband transceiver to the various RTUs based on a Policy. ¶0047. For example, Wu discloses,
>
> channel 1 from band 263A could be routed as an individual, separate from channels 2-4 from band 263A. Channels 5 and 6 could be grouped and routed together to an RTU, or could be split.

EX-1007, ¶0047.

81. Wu also discloses that the Matrix switch 250, also receives the carrier channels from the RTUs through the Host units and combine[s] the channels back into their proper form for transmission within bands 263 for transmission via multi-band transceiver 260. EX-1007, ¶0038.

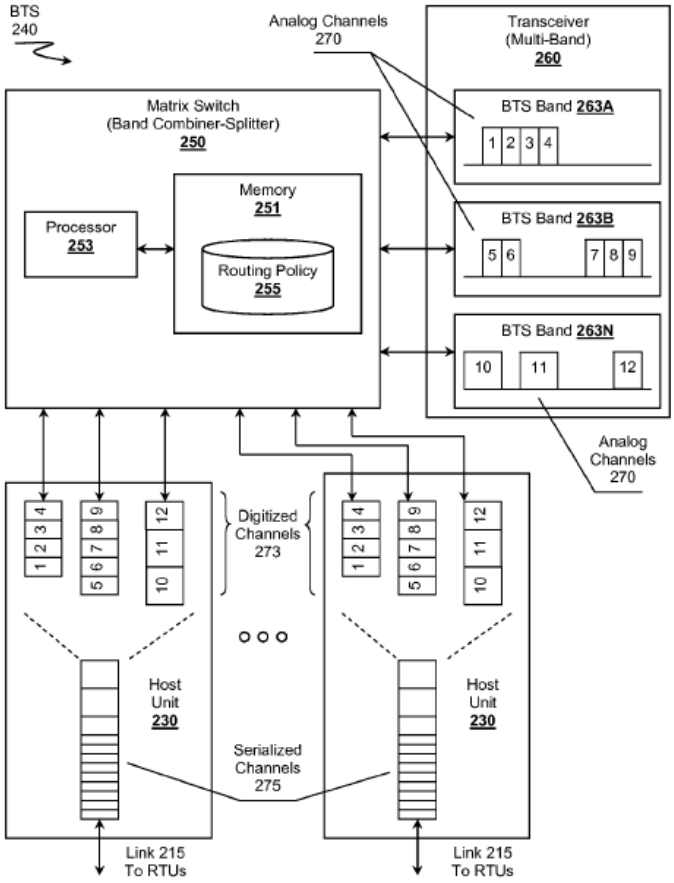

Figure 2

EX-1007, Fig. 2.

82. The RTUs can be distributed throughout a region or multiple regions in various configurations, including a Simulcast configuration.

> In FIG. 4, RTUs 410 are arranged into different carrier channel distribution configurations. BTS 440 comprises two of host unit 430, which route carrier channels to one or more of RTUs 410. Configurations can include one-to-one couplings, one-to-many couplings, or even many-to many couplings if an application calls for such a configuration…Simulcast configuration 493 represents a configuration where a single host unit 430 couples to more than one RTU 410 in a one-to-many configuration. A single host unit 430 **can duplicate serialized carrier channels as necessary and send the serialized data over more than one fiber optic link to multiple RTUs 410**… Cascade configuration 495 also represents a one-to-many configuration where a host unit 430 couples to an RTU 410, which in turn cascades the serialized carrier channels to another RTU 410, preferably over another optic link.

EX-1007, ¶0051 (emphasis added).

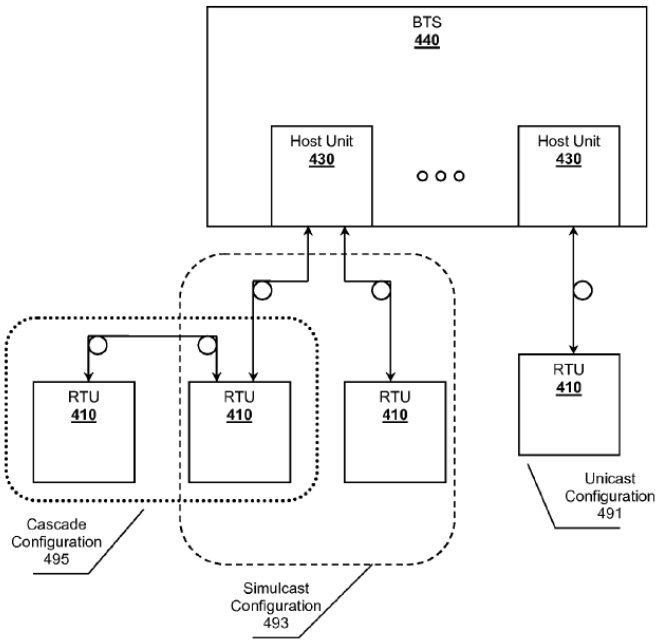

Figure 4

EX-1007, Fig. 4.

83. Therefore, Wu discloses a system that takes a channel of a carrier signal and distributes the same channel to multiple RTUs through the Matrix switch and a Simulcast transmission. The two RTUs using the same channel will send back traffic on said channel at which point the Matrix switch will combine the signals for receipt by the multi-band transceiver.

Received channels 1-12 from bands 263 are forwarded to matrix switch 250. **Matrix switch 250 can operate as a combiner**/splitter, preferably an analog

> combiner/splitter, where bands 263 can have their individual channels 1-12 split into individual channels or groups of channels (e.g., 1-4, 5-6, 7-9, etc.). In a preferred embodiment, matrix switch 250 routes analog channels 270 to an appropriate host unit 230 according to a policy 255 for distribution to remote regions or RTUs. Host units 230 further distribute the channels to RTUs over links 215. As referenced previously, **matrix switch 250 can also receive channel signals from host units 230 and can combine the channels** back into their proper form for transmission within bands 263 for transmission via multi-band transceiver 260.

EX-1007, ¶0038, *see also* ¶¶0047, 0051.

84. This is consistent with the concept of "uplink summing" used by the '343 Patent, which appears to discuss the concept in only a few places. Firstly, the '343 Patent states that,

> It is a further object of the present invention to provide a 40 method of summing co-channel users' uplink signals.

EX-1001, 3:40-41.

85. To achieve this objective, the '343 Patent only briefly describes the following method of summing co-channel users' uplink signals:

> [W]hen DRU 125A receives a strong enough signal at its receive antenna port within the Channel K bandwidth to be properly filtered and processed, the Digital Down Converters within DRU 125A facilitate processing and conversion. The signals from DRU 125A and DRU 125C are combined based on the active signal combining algorithm, and are fed to the base station connected to the uplink output port of DAU 105. **The term simulcast is frequently used to describe the operation of DRU 125A and DRU 125C with regard to uplink and 5 downlink signals within Channel K bandwidth**.

EX-1001, 10:63-11:1-10 (emphasis added).

> As described previously, the uplink signals from the four DRUs are combined within the respective DAU corresponding to each base station.

EX-1001 11:23-25.

86. In other words, the term "uplink summing" is used to describe a method of combining two signals from different DRUs (RTUs) that are using the same channel, in this case, Channel K, to send to the base station. This process would occur in response to Simulcasts—identical to the Simulcast situation described in Wu.

87. Thus, as described in detail above, Wu discloses *dynamic load balancing and resource management* in the Matrix switch

routing the carrier signals based on a Policy determined in part by a demined load. Wu also discloses the *dynamic load balancing and resource management uses uplink summing to combine signals from at least the first and second remote units* by combining the Simulcast channel from a first and second RTU at the Matrix switch for uplink by the multi-band transceiver.

88. A POSA understood from the teachings of Wu that the two RTUs using the same channel being combined into a common uplink, for example, in response to a simulcast transmission, would need to be combined using a summing algorithm or method of similar nature.

e. Claim 6

i. The system of claim 1, wherein the dynamic load balancing and resource management uses steering to route signal traffic in the system.

89. Wu discloses or renders obvious a system wherein the dynamic load balancing and resource management uses steering to route signal traffic in the system. Wu discloses the use policies stored as computer instruction in computer memory to configure a Matrix switch to properly route [*steer*] carriers to the RTU. EX-1007, ¶0040.

> Wu discloses routing the channels based on the current traffic load to prevent potential traffic issues. EX-1007, ¶0044. Wu discloses that,
>
> if the current or recent historical traffic metric have a profile that satisfies criteria of a signature for a triggering condition, Switch 250 can route, allocate, or distribute channels as defined by policy 255 to balance traffic load.

EX-1007, ¶0044.

90. Thus, Wu discloses or renders obvious a system wherein the dynamic load balancing and resource management uses steering to route signal traffic in the system.

f. Claim 7

i. The system of claim 1, wherein the dynamic load balancing and resource management uses capacity steering to route signal traffic in the system.

91. Wu discloses or renders obvious a system wherein the dynamic load balancing and resource management uses capacity steering to route signal traffic in the system. Wu discloses routing channels [*signal traffic*] based on the current traffic load and an analysis of traffic metrics such as data rate, call rate, consumed bandwidth and correlate various metrics with load balancing to detect potential traffic issues. EX-1007, ¶0044. If the traffic metric, such as consumed bandwidth for a remote unit reaches a triggering condition,

the switch 250 can route various channels to balance traffic load. EX-1007, ¶0044. Wu discloses that,

> if the current or recent historical traffic metric have a profile that satisfies criteria of a signature for a triggering condition, Switch 250 can route, allocate, or distribute channels as defined by policy 255 to balance traffic load.

EX-1007, ¶0044.

92. A POSA understood that by using "consumed bandwidth" to route traffic, the system is practicing *capacity steering*. Thus, Wu discloses or renders obvious a system wherein the dynamic load balancing and resource management uses capacity steering to route signal traffic in the system.

g. Claim 8

i. The system of claim 1, wherein the dynamic load balancing and resource management uses network capacity to route signal traffic in the system.

93. Wu discloses a system wherein the dynamic load balancing and resource management uses network capacity to route signal traffic in the system. Wu discloses routing channels [*signal traffic*] based on the current traffic load and an analysis of traffic metrics such as data rate, call rate, consumed bandwidth and correlate various metrics with load balancing to detect potential traffic issues.

EX-1007, ¶0044. If the traffic metric, such as consumed bandwidth, reaches a triggering condition, the switch 250 can route various channels to balance traffic load. EX-1007, ¶0044.

94. A POSA understood from the teachings of Wu that balancing the load of the entire network based on current traffic would take into account the network capacity to determine whether the consumer bandwidth width was indicative of a load balancing issue. Without knowing the total network capacity there would be no context for how many of the total resources should be sent to a location resulting in too many or no resources in some locations. Thus, Wu discloses or renders obvious a system wherein the dynamic load balancing and resource management uses network capacity to route signal traffic in the system.

h. Claim 9

i. The system of claim 1, wherein the first remote unit is a low power radio capable of using multiple frequency bands.

95. Wu discloses a system wherein the first remote unit is a low power radio capable of using multiple frequency bands. Wu discloses that frequency channels from different frequency bands [*multiple frequencies*] can be sent to the same RTU [*first remote unit*].

EX-1007, ¶0047. For example, WU teaches, "channel 3 from band 263A could be combined with channel 12 from band 263N, which can then be routed together to an RTU as a group. EX-1007, ¶0047.

96. Further, Wu discloses using a booster for the analog signal output of the RTU.

> The channels can be digitized using an ADC individually or as a group within an envelope as shown. The digitized channels and their encapsulated data can then be sent as a serialized stream to the RTUs, where the streams are de-serialized and converted back to analog signals for presentation to boosters.

EX-1007, ¶0054.

97. A POSA understood from the teachings of Wu that the RRH was low power because of the need for a power booster prior to transmission. Thus, Wu discloses or renders obvious a system wherein the first remote unit is a low power radio capable of using multiple frequency bands.

i. Claim 10

i. The system of claim 1, wherein the digital signals communicated between the digital access unit and the remote units are sent via optical cables.

98. Wu discloses or renders obvious a system wherein the digital signals communicated between the digital access unit and the

remote units are sent via optical cables. Wu discloses base station is communicatively coupled to the RTUs via the host units using communication links, 115. Wu further teaches that the "[h]ost units 130 [*digital access unit*] relay [*communicate*] digitized signals [*digital signals*] between BTS 140 and remote transceiver units (RTUs) 110 [*remote units*] within the remote cell regions 120 using the physical links 115, preferably fiber optic links [*optical cables*]. EX-1007, ¶0030.

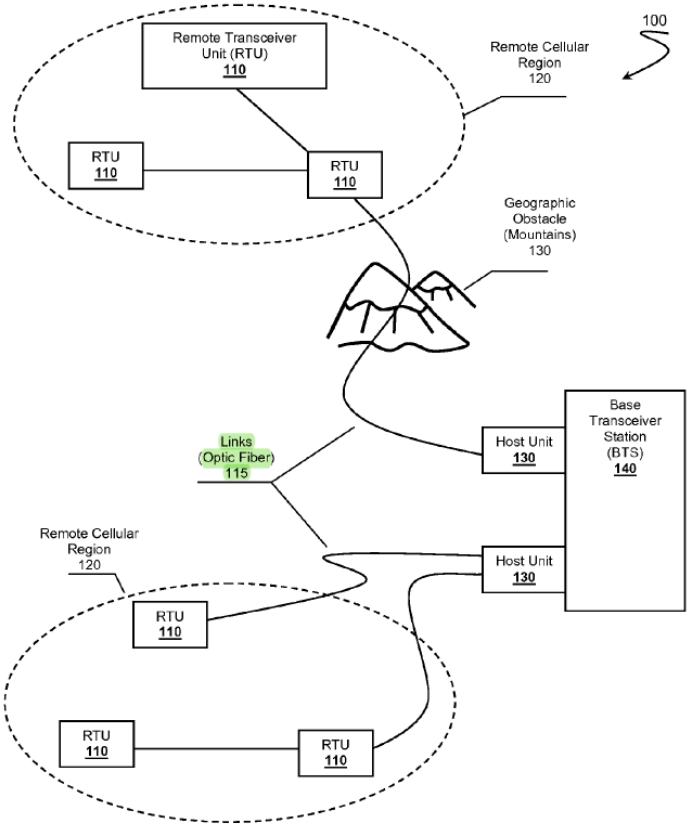

Figure 1

EX-1007, Fig. 1 (annotated).

99. Thus, Wu discloses a system wherein the digital signals communicated between the digital access unit and the remote units are sent via optical cables.

j. Claim 12

i. **[12.pre]** ***A method for wireless communications comprising:***

100. *See* Claim 1, element [1.pre].

ii. **[12.a]** ***receiving at a digital access unit, a plurality of radio resources from a first signal source and a second signal source, wherein the digital access unit comprises a plurality of interfaces to communicatively couple the digital access unit to a plurality of signal sources****;*

101. *See* Claim 1, elements [1.a], [1.b], and [1.e].

iii. **[12.b]** ***sending, by the digital access unit, a digital representation of a first set of radio resources to a first remote unit at a first point in time,, the first set of radio resources for transmission at an antenna of the first remote unit***;

102. *See* Claim 1, element [1.f].

iv. ***sending from the digital access unit, a digital representation of a second set of radio resources to the first remote unit at a second point in time,***

the second set of radio resources for transmission at the antenna of the first remote unit;

103. *See* Claim 1, element [1.g].

v. ***wherein a number of radio resources in the first set of radio resources is different from a number of radio resources in the second set of radio resources at least based on dynamic load balancing and resource management***.

104. *See* Claim 1, element [1.h].

k. Claim 13

i. ***The method of claim 12 further comprising determining load and selecting traffic paths based at least in part on determined load.***

105. *See* Claim 2.

l. Claim 14

i. ***The method of claim 12 wherein the dynamic load balancing and resource management controls routes from a digital access unit port to a remote unit port***.

106. *See* Claim 3.

m. Claim 16

i. ***The method of claim 12 wherein the dynamic load balancing and resource management uses***

uplink summing to combine signals from at least the first and second remote units.

107. *See* Claim 5.

n. Claim 17

i. ***The method of claim 12 wherein the dynamic load balancing and resource management uses steering to route signal traffic in the system***.

108. *See* Claim 6.

o. Claim 18

i. The method of claim 12 wherein the dynamic load balancing and resource management uses capacity steering to route signal traffic in the system.

109. *See* Claim 7.

p. Claim 19

i. The system of claim 12, wherein the dynamic load balancing and resource management uses network capacity to route signal traffic in the system.

110. *See* Claim 8.

q. Claim 20

i. The system of claim 12, wherein the first remote unit is a low power radio capable of using multiple frequency bands.

111. *See* Claim 9.

r. Claim 21

i. The system of claim 12, wherein the digital signals communicated between the digital access unit and the remote units are sent via optical cables

112. *See* Claim 10.

B. Ground 2: Claims 4, 11, 15, 22 Are Obvious Over Wu and Cannon

1. The Cannon Reference

113. Cannon is directed to a DAS for receiving and distributing RF signals within a coverage area. FIG. 1 of Cannon illustrates one embodiment:

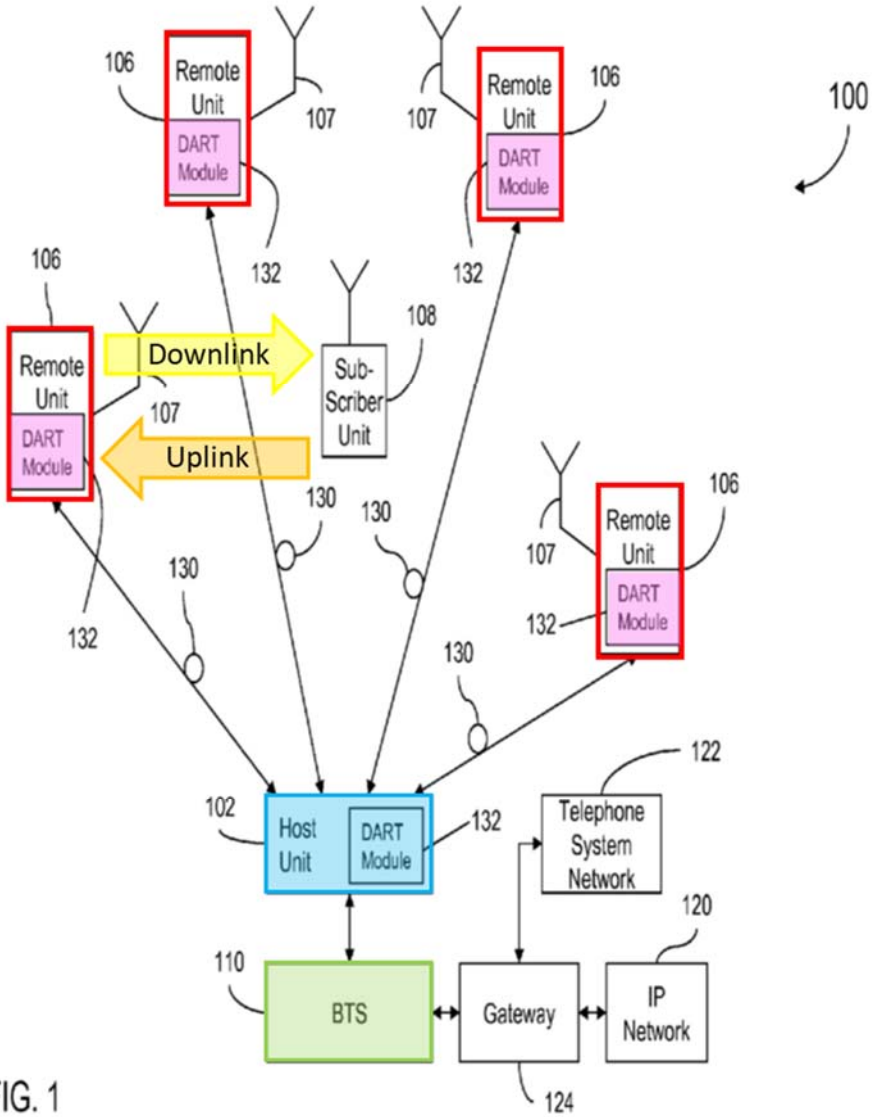

EX-1017, FIG. 1 (annotated).

114. DAS 100 includes a host unit 102 (blue) and a plurality of remote units 106 (red). Remote units 106 each house electronic devices and systems used for wirelessly transmitting (yellow) and receiving (orange) modulated RF communications via antenna 107

with one or more mobile subscriber units 108. Host unit 102 is coupled to at least one base station BTS 110 (green). BTS 110 communicates voice and other data signals between the respective host unit 102 and a larger communication network via a gateway 124 coupled to a telephone system network 122 (for example, the public switched telephone network and/or wireless service provider networks) and an internet protocol (IP) network 120, such as the Internet. EX-1017, ¶0019~~2:59-3:23~~.

115. In the embodiment of FIG. 1, each remote unit 106 and host unit 102 comprises a digital to analog radio frequency transceiver (DART) module 132 (pink) configured to conserve the available bandwidth of the communication links 130 by separating and individually processing spectral regions of interest from a larger RF spectrum. EX-1017, ¶0021~~4:6-11~~.

116. Cannon describes that the DART modules are realized using field programmable gate arrays (FPGAs), application specific integrated circuits (ASICs), digital signal processing (DSP) boards, or similar devices. EX-1017, ¶0022~~4:20-23~~.

117. FIG. 5 is a block diagram illustrating a DART Module 500 of one embodiment.

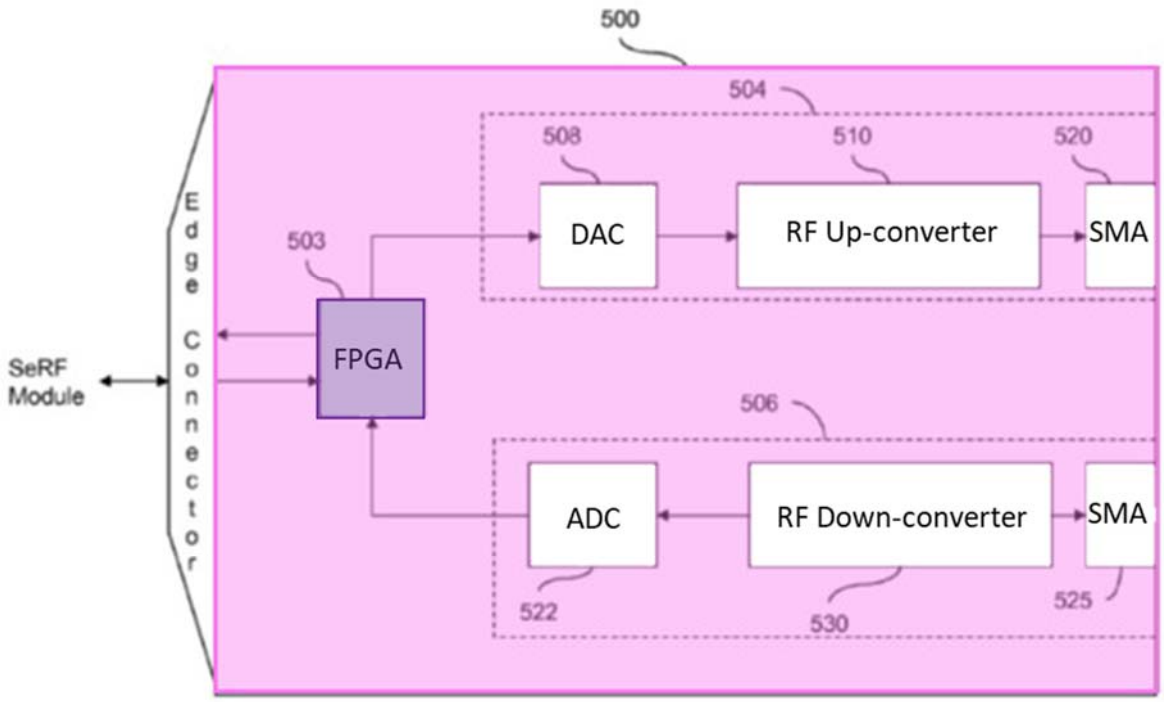

Fig. 5

EX-1017, Fig. 5 (annotated).

118. DART module 500 (pink) has two main signal paths: a transmission path 504 and a reception path 506. For signals received from a SeRF module, DART module 500 forms parallel digital RF data from the incoming data stream. In this embodiment, FPGA 503(purple) is a logic device that is programmed to convert serial digital data into RF sampled data and programmed to convert RF sampled data into serial digital data. DART module 500 then converts the digital RF data to an analog signal with digital to analog converter (DAC) 508. Transmission path 504 continues with RF transmission

interface 510 which filters, amplifies, and up-converts the analog signal for RF transmission. Cannon describes that RF transmission interface 510 will typically include an assortment of filters, amplifiers, oscillators and attenuators known to a POSA. In one embodiment, the transmission path exits DART module 500 at a subminiature version A RF coaxial connector (SMA) connector 520. EX-1017, ¶0036~~7:10-33~~.

119. FIG. 6 is a block diagram providing further details for FPGA 503 (purple) for one embodiment.

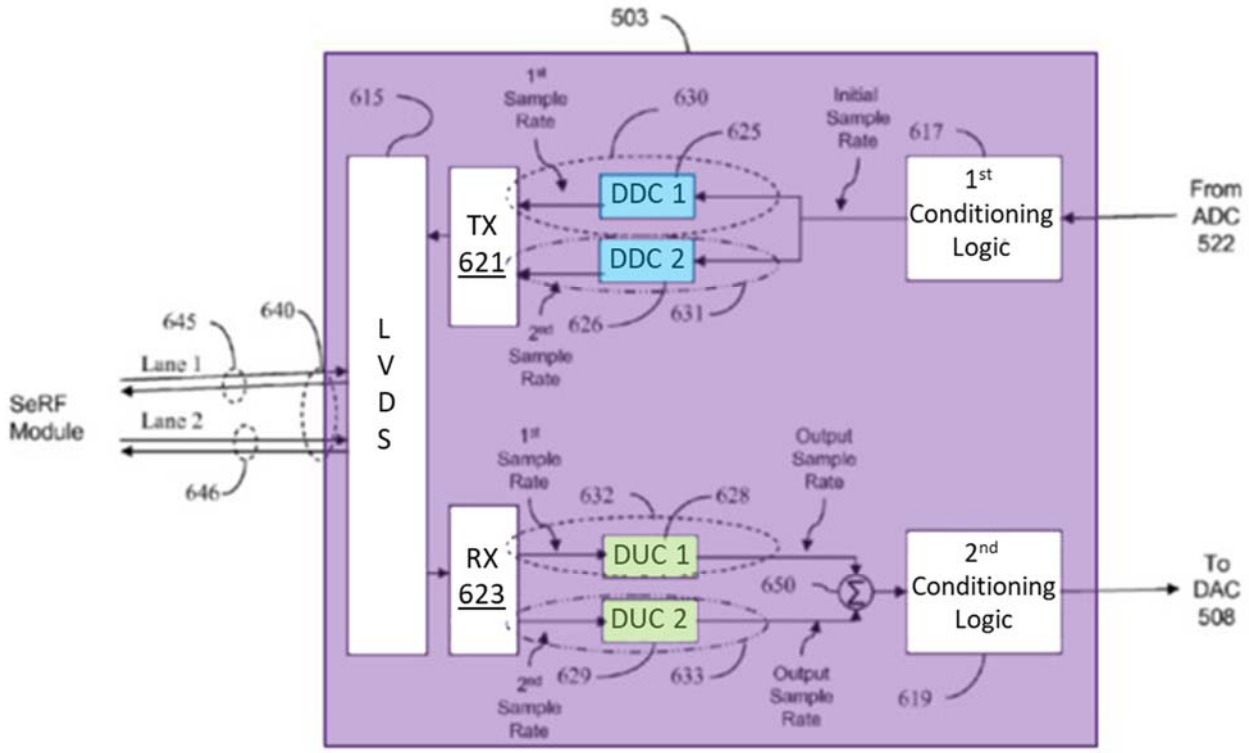

Fig. 6

EX-1017, Fig. 6 (annotated).

120. FPGA 503, for both the upstream and downstream directions, provides separate signal processing paths for each discrete spectral region of a digitized RF spectrum (such as 400 or 460 from FIG. 4) that is to be mapped onto timeslots of the transport frame 460. Cannon discloses that the number of carriers is not limited to only two, and that the DART can be programmed to handle three or more spectral regions and thus carriers, limited only by the limits of the implementing hardware. EX-1017, ¶0034~~6:47:55; 7:47-64~~. Thus, a POSA understood that Cannon teaches that each FPGA could be programmed with a set of carrier frequencies.

121. Cannon describes that using a FPGA includes DUCs (green) and DDCs (blue) that can be programmed with a center frequency and bandwidth to reconfigure the carrier of the remote radio unit. EX-1017, FIG. 6; ¶0042~~8:45-9:10~~. Cannon describes that the use of a FPGA in a remote radio unit is beneficial because the remote radio unit can be adjusted to meet the changing needs of the end user very simply using programming. EX-1017, ¶0046~~9:45-47~~.

2. A POSA Would Combine the Teachings of Wu and Cannon

122. The ’343 Patent, Wu and Cannon are all directed to dynamically allocating frequency spectrum in a DAS. All three

provide examples of mobile subscribers communicating with a remote radio unit of a DAS. EX-1001, FIG. 1; EX-1007, FIG. 1; EX-1017, FIG. 1. The ’343 Patent describes reconfiguring each DRU based on the loading of each DRU. EX-1001, 12:50-13:2. The ’343 Patent describes that DRUs are reconfigured by the use of software-programmable frequency selective FPGAs, DUCs and DDCs. EX-1001, 6:36-46, 7:32-46; 10:13-27. Wu likewise describes reconfiguring each RTU based on the load of each unit. EX-1007, ¶¶0011, 0039, 0044. Wu describes that the carrier channels can be routed as desired based on the usage and load. EX-1007, [0039]. Specifically, as described above, in one embodiment, Wu discloses programming a network routing policy to allocate carrier channels to different RTUs through a Matrix Switch 250 based on the loading demands in various scenarios such as sporting events. EX-1007, ¶¶0045-0047. Cannon describes that the RRH can use a DART in the form of a FPGA. Cannon describes that using a FPGA includes DUCs and DDCs that can be programmed with a center frequency and bandwidth to reconfigure the carrier of the RRH. EX-1017, FIG. 6; ¶0042~~8:45-9:10~~. Cannon describes that the use of a FPGA in an RRH is beneficial because the unit can be simply adjusted to meet the

changing needs of the end user using programming. EX-1017, ¶0046~~9:45-47~~.

123. A POSA would be motivated to modify the teachings of Wu to include a FPGA in the remote radio unit (RTUs) as taught by Cannon because Cannon expressly teaches that the use of a FPGA allows each remote radio unit to be adjusted to meet the changing needs of the end user, and Wu teaches that the needs of the end user can be determined by the load of the remote radio units. Specifically, a POSA understood that Wu teaches to reconfigure a remote radio unit in a DAS by changing the carriers of the remote radio unit based on the load of the remote radio unit, and that there are only a few finite ways to reconfigure a radio by changing its carrier frequency. Cannon discloses one such suitable way to reconfigure the carrier frequency of the remote radio is the use of a FPGA and requires only a programming change.

124. In this section (and discussed further below in the claims analysis) I discuss how:

i. Wu and Cannon themselves provided teaching, suggestion, or motivation that would have led a POSA to modify Wu's teaching of reconfiguring a remote radio unit in a DAS based on the loading of the

remote radio unit, with the use of an FPGA in the remote radio unit as taught by Cannon because an FPGA is adjustable to meet the changing needs of the end user.

ii. The general knowledge in the art was that Cannon's use of FPGA was an accepted, known and predictable mechanism to adjust the carrier frequencies of DUCs and DDCs in remote radio units in a DAS by using programming, and the use of software-programmable frequency selective DUCs and DDCs was identified as a known benefit in the '343 Patent.

iii. The beneficial aspects of Wu's technique for dynamic reassignment of the DAS based on a real-time load distributing condition, improving the efficiency of the system, and achieving reassignment on line without interrupting the service, would be accomplished by using an FPGA with predictable results.

iv. A POSA would also be confident the modification would enjoy a high likelihood of success given the predictable nature and successful history of use of FPGAs and radio transceivers.

3. Detailed Application of Wu and Cannon to Claims 4, 11, 15, and 22

a. Claim 4

i. ***The system of claim 1, wherein the dynamic load balancing and resource management dynamically adjusts a capacity of at least the first remote unit.***

125. Wu in combination with Cannon discloses or renders obvious a system wherein the dynamic load balancing and resource management dynamically adjusts a capacity of at least the first remote unit. Wu discloses that Matrix switch, 250, may be configured using the routing policy, 255, to dynamically reroute or reallocate the radio resources [*adjust capacity*] to the RTUs [*of the first remote unit*] based on changing network conditions such as traffic rate, a consumed bandwidth, current traffic load, call rate, and load balancing. EX-1007, ¶¶0041-0044. Cannon discloses a system wherein the dynamic load balancing and resource management dynamically adjusts a capacity of at least the first remote unit.

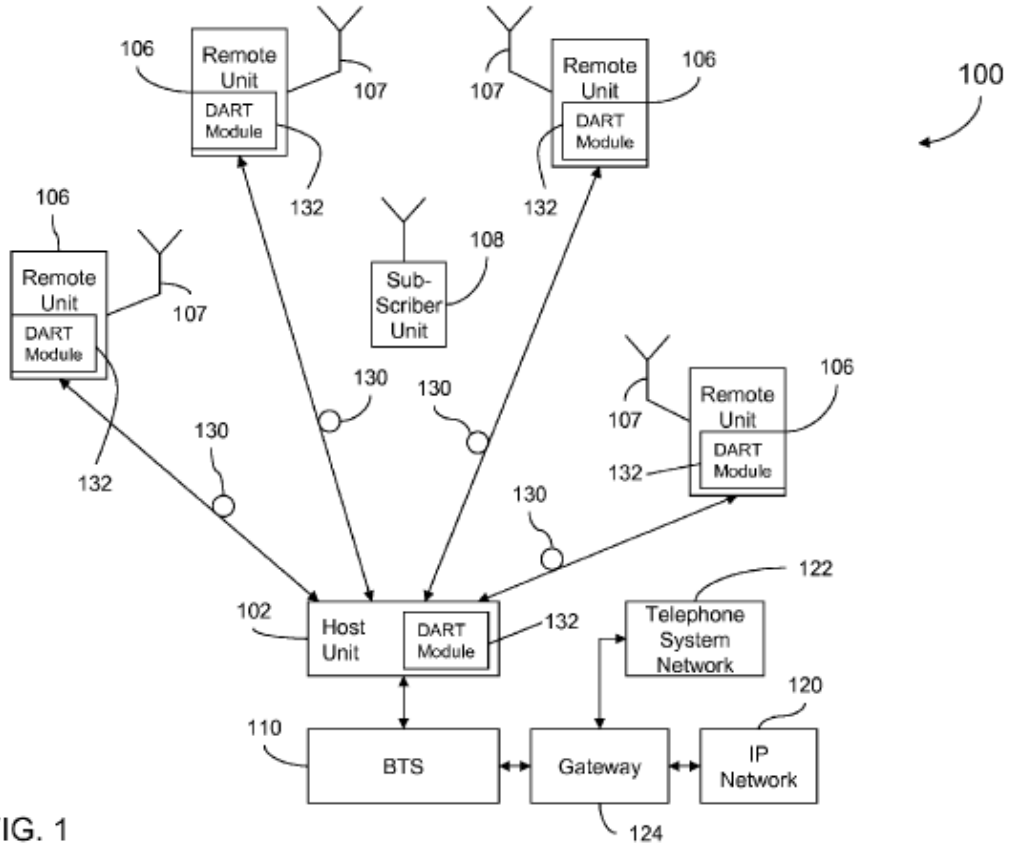

FIG. 1

EX-1017, Fig. 1.

126. Cannon discloses a digital to analog radio frequency transceiver (DART) module that separates spectral regions of interest of the overall spectrum. In Fig. 5, shown above, the DART module in each remote unit contains a field programmable gate array (FPGA) 503. Each FPGA is programmable to automatically configure the remote unit itself to alter both the bandwidths and the frequencies that are processed by the remote unit [*adjust a capacity of the at least the first remote unit*]. EX-1017, ¶0046~~9:47-53~~. Cannon discloses that the

FPGAs are adjusted "to meet changing needs of the end user," EX-1017, ¶0046~~9:45-47~~.

127. This is consistent with the '343 Patent, which discloses dynamically adjusting a gain control parameter of integrated frequency selective DUCs and DDCs in the DRUs as well as reconfiguring a FPGA in each DRU to determine which carrier signals will be in the downlink. EX-1001, 6:38-46, 7:32-46.

128. As described above, (§VI.B.2), it would have been obvious to combine the teachings of Cannon to the method and system of Wu to meet the changing needs of the end user.

b. Claim 11

i. The system of claim 1, wherein the remote units are automatically configured by the system.

129. Wu in combination with Cannon discloses or renders obvious a system wherein the remote units are automatically configured by the system. Wu discloses storing policies that are programmatic instructions in computer memory that configures switch 250 to properly route radio resources. EX-1007, ¶0040. The switch matrix allocates carriers from the same band, from different bands as well as splitting and grouping the channels. EX-1007, ¶0047.

Furthermore, Wu discloses the matrix switch, "automatically allocate the carriers channels according to the policy." EX-1007, Claim 11.

130. Cannon discloses a system wherein the remote units are automatically configured by the system.

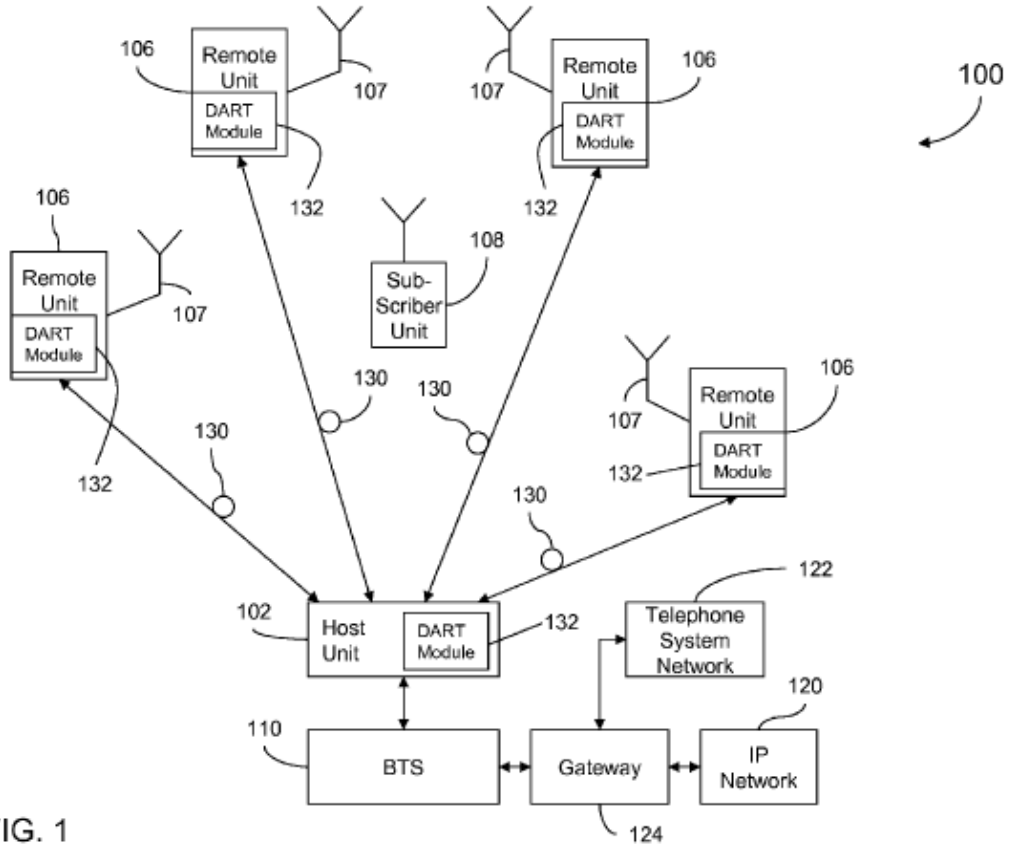

FIG. 1

EX-1017, Fig. 1.

131. Cannon discloses a digital to analog radio frequency transceiver (DART) module that separates spectral regions of interest

of the overall spectrum. In Fig. 5, shown above, the DART module in each remote unit contains a field programmable gate array (FPGA) 503. Each FPGA is programmable to automatically configure the remote unit itself to alter both the bandwidths and the frequencies that are processed by the remote unit. Cannon discloses that the FPGAs are adjusted "to meet changing needs of the end user," EX-1017, ¶0046~~9:45-47~~, and located in the remote units to allow the remotes units to be adjusted automatically by using "predefined configuration builds [that] are stored in a memory," such that "a DART Module's FPGA can be reconfigured by pushing a new build image onto the FPGA." EX-1017, ¶0046~~9:58-61~~.

132. Wu further discloses the method of selecting the build image based on the reconfiguration information.

> The method proceeds to 704 with selecting a build from a plurality of builds stored in a data storage device, such as but not limited to a flash memory. Selection of the build is based on the received configuration information. **The method proceeds to 706 with programming a field programmable device, such as an FPGA, by transferring the build to the field programmable device**.

EX-1017, ¶0047~~10:8-15~~ (emphasis added).

133. This is consistent with the '343 Patent, which discloses dynamically adjusting a gain control parameter of integrated

frequency selective DUCs and DDCs in the DRUs as well as reconfiguring a FPGA in each DRU to determine which carrier signals will be in the downlink. EX-1001, 6:38-46, 7:32-46.

134. As described above, (§VI.B.2), it would have been obvious to combine the teachings of Cannon to the method and system of Wu.

a. Claim 15

ii. ***The method of claim 12 wherein the dynamic load balancing and resource management dynamically adjusts a capacity of at least the first remote unit***.

135. *See* Claim 4.

c. Claim 22

i. The system of claim 12, wherein the remote units are automatically configured by the system

136. *See* Claim 11.

CONCLUSION AND DECLARATION

My findings and opinions set forth in this Declaration are based on my work and examination to date. I may continue my examinations in view of additional documents or other factual evidence over the course of this proceeding that may necessitate supplementing and/or refining my opinions. I reserve the right to add to, alter, or delete my opinions and my Declaration upon discovery of additional information. I reserve the right to make such changes as necessary.

In signing this Declaration, I understand that the Declaration will be filed as evidence in a contested case before the Patent Trial and Appeal Board of the United States Patent and Trademark Office. I acknowledge that I may be subject to cross-examination in this case and that cross-examination will take place within the United States. If cross-examination is required of me, I will appear for cross-examination within the United States during the time allotted for cross-examination.

I declare that all statements made herein of my knowledge are true, and that all statements made on information and belief are believed to be true, and that these statements were made with the knowledge that willful false statements and the like so made are punishable by fine or imprisonment, or both, under Section 1001, of Title 18 of the United States Code.

[SIGNATURE ON FOLLOWING PAGE]

Date: August 2, 2022 By: Henry H. Houh

Henry H. Houh

APPENDIX A – MATERIALS RELIED UPON

Exhibit No.	Description
1001	U.S. Patent No. 11,006,343 ("'343 Patent") to Stapleton et al., Provisional filing date of February 7, 2011.
1002	U.S. Patent No. 10,080,178 ("'178 Patent") to Stapleton et al., Provisional filing date of February 7, 2011.
1003	U.S. Patent No. 9,531,473 ("'473 Patent") to Lemson et al., Provisional filing date of September 14, 2010.
1004	Decision Granting Institution of *Inter Partes Review* for the 178 Patent (Case IPR2020-01473, Paper 18), Entered: March 12, 2021.
1006	Final Written Decision for the 473 Patent (Case PR2018-00571, Paper 53), Entered: August 12, 2019.
1007	U.S. Patent Pub. No. 2010/0128676 ("Wu") to Dong Wu et al., Publication Date of May 27, 2010.
1008	U.S. Patent No. 6,963,552 ("Sabat-552") to Sabat et al., Patent Issue Date of November 8, 2005.
1009	U.S. Patent Pub. No. 2009/0180426 ("Sabat-426") to Sabat et al., Publication Date of July 16, 2009.
1010	ERICSSON AB ET AL., *CPRI Specification V4.0; Interface Specification*, June 30, 2008.
1011	U.S. Patent No. 7,286,507 ("Oh") to Oh et al., Patent Issue Date of October 23, 2007.
1013	File History for U.S. Patent No. 11,006,343.
1015	International Application Publication WO 2009/021359 A1 published on February 19, 2009 ("Leng")

1016	Certified English Translation of Leng (EX-1015)
1017	U.S. Patent Pub. No. 2010/0177760 A1 ("Cannon") to Cannon et al., Patent Publication Date of July 15, 2010.
1018	U.S. Pat. No. 8,588,614 ("Larsen") to Larsen, Filing Date of May 18, 2010.

APPENDIX B – CURRICULUM VITAE

Henry H. Houh

15 Ballard Ter.
Lexington, MA 02420
henry.houh@gmail.com
cell: 781-325-8273

Education

Massachusetts Institute of Technology, Cambridge, MA

- PhD in Electrical Engineering and Computer Science, February 1998. "Designing Networks for Tomorrow's Traffic," thesis supervised by Professor David Tennenhouse and Professor John Guttag. GPA 4.7/5.0
- Master of Science in Electrical Engineering and Computer Science, February 1991. "Demonstration of a laser repetition rate multiplier," thesis. GPA 4.5/5.0
- Bachelor of Science in Electrical Engineering and Computer Science, June 1989. "Boundary element analysis of arbitrarily shaped dielectric structures," thesis. GPA 4.7/5.0
- Bachelor of Science in Physics, February 1990. GPA 4.7/5.0

MITx, Cambridge, MA

- September 2020 – present: Enrolled in Statistics and Data Science MicroMasters program, a sequence of five MIT-offered graduate-level courses in statistics and machine learning, culminating in a MicroMasters certificate, expected 2022. Have completed four of five required courses.

Experience

BlocksCAD Inc. (H3XL spin-out)

- 2014 - present: Founder and member of Board of Directors. BlocksCAD is a visual Computer-Aided Design (CAD) program, designed to teach children mathematics and geometric visualization. BlocksCAD is being used in U.S. schools and worldwide in maker spaces, with 350,000+ users. BlocksCAD was selected to be part of the LearnLaunch 2017 Boost Accelerator, the MIT Play Labs 2018 Summer Accelerator, and the MassChallenge 2018 Boston Cohort. Recipient of DARPA DSO grant in 2014, and SBIR grant from the USDA in 2019.

H3XL Inc. d/b/a Einstein's Workshop (formerly Lexington Robotics)

- 2009 - present: Founder and President. Started local league providing science and engineering education programs based on LEGO Mindstorms, LEGO WeDo, and FIRST

C

CommScope v. Dali Wireless
CommScope Exhibit 1012

LEGO League. In 2012, grew program into a full science, technology, engineering and math enrichment program and creative/maker space, in 7,000 square feet of space. Serve 2,000+ kids and families annually. As of end of 2021, have delivered an estimated 220,000 student-instruction-hours of STEM courses. Principle Investigator for 2-year DARPA grant to improve 3D Computer Aided Design tool developed in-house for the purposes of teaching 8 year olds and up 3D CAD.

Houh Consulting Inc. / Independent Consultant

- 2009 - present: Technical consultant specializing in Social Networking, Web 2.0, Web Site Development, Data Networking, Optical Networking, Telecommunications, Media Streaming and Voice Over IP. Clients include: Akin Gump Strauss Hauer & Feld LLP, Arnold & Porter Kaye Scholer LLP, BBN, Baker Botts LLP, Barnes & Thornburg LLP, BBN Technologies, Beus Gilbert McGroder PLLC, Bracewell LLP, Christensen O'Connor Johnson Kindness PLLC, Cooley LLP, Covington & Burling LLP, Cozen O'Connor P.C., DLA Piper, Davis Polk & Wardwell LLP, Desmarais LLP, Duane Morris LLP, Erise IP, P.A., Faegre Baker Daniels LLP, Finnegan, Henderson, Farabow, Garrett & Dunner, LLP, Fish & Richardson P.C., Goldman Ismail Tomaselli Brennan & Baum LLP, Haynes and Boone, LLP, Kaye Scholer, Kellogg Huber Hanson Todd Evans & Figel PLLC, Kirkland & Ellis LLP, Klarquist Sparkman, LLP, McCarthy Tetrault LLP, McGuireWoods LLP, Morgan, Lewis & Bockius LLP, Munger Tolles & Olson LLP, Orrick, Herrington & Sutfliffe LLP, O'Melveny & Myers LLP, Orrick, Herrington & Sutcliffe LLP, Paul Hastings LLP, Paul, Weiss, Rifkind, Wharton & Garrison LLP, Perkins Coie LLP, Quinn Emanuel Urquhart & Sullivan, LLP, Sidley Austin LLP, Smith Baluch LLP, Sterne, Kessler, Goldstein & Fox PLLC, Troutman Sanders LLP, Venable LLP, Weil, Gotshal & Manges LLP, Wiley Rein LLP, Wilmer Cutler Pickering Hale and Dorr LLP, and Winston & Strawn LLP.

Eons

- 2008 - 2009: Chief Technology Officer. Created product that Eons acquired from BBN Technologies. Integrated BBN product with Eons social networking platform and significantly increased the Eons group creation rate. Helped evaluate advertisement platform offerings and rolled out the "Boom Network" advertising network. Eons raised $32 million from General Catalyst Partners, Charles River Ventures, Sequoia Capital, and Intel Capital.

BBN Technologies

- 2007 - 2008: Delta Division, Vice President of Technology. Grew "Boomerang" counter-sniper project engineering team and significantly de-risked $10 million worth of product deliveries. Boomerang was a significant asset leading to the acquisition of BBN by Raytheon in 2009. Created new business plan and grew team; launched new fully-featured social networking web site in 5 months. Served as lead expert witness in patent infringement lawsuit, resulting in $58 million jury award to client; verdict for patents I testified on were upheld on appeal which resulted in a $120 million settlement.

- 2004 - 2007: Delta Division, Director of Technology, responsible for commercializing IP and creating new businesses. Hired and grew division's initial engineering team. Wrote three business plans, two of which are funded and active. For call center business plan, acted as general manager, hiring and managing engineering team, inside sales team, and identifying and recruiting a new general manager. Identified and recruited other key employees to Delta Division, including senior members of team leading to successful internal sales growth and spin-outs of projects. Contracted by BBN to BBN spin-out PodZinger as VP of Operations and Technology. Identified sales team for counter-sniper system, leading to $10 million dollars of new sales within 6 months and $100+ million in additional orders in the following two years.

PodZinger Inc. (BBN spin-out, also known as EveryZing and now RAMP)

- 2006: Vice President of Operations and Technology. Significantly upgraded capability of consumer-facing search site and redeployed web site from company to co-location facility. Identified key portions of infrastructure for upgrading and cost reduction. Helped write business plan, evaluating advertisement models of revenue. Hired in operations replacement and phased back to BBN.

Commonwealth Capital

- 2004: Entrepreneur-in-residence (informally), performed technical due diligence on business plans, brainstormed ideas for new businesses with venture partner. With venture partner, left for portfolio company BBN to form core of commercialization team.

Empirix, Inc./Teradyne, Inc.

- 2001 - 2004: Chief Technologist, Engineering Manager, Web Application Test Group. Researched potential new product areas; developed product plan and prototype. Responsible for three new and existing products. Managed off-shore development team. Chief architect for all web testing products. Re-architected core testing product, helped write javascript interpreter. Provided technical vision for core product.
- 2000 - 2001: Chief Technologist, Communication Infrastructure Test Group. Responsible for incorporating new technology internally, tracking new technologies, technical evaluation of partnerships and potential acquisitions. Helped develop division strategy. Developed plans which formed core capabilities for successful new products introduced in 2004-5.
- 2000 - 2001: Engineering Manager, Communications Infrastructure Test Group. Execution of new product plan developed in prior role. Grew team from four existing engineers to team of over 30 on immediate team and over 40 on project. Delivered new platform in one year. Platform and derivatives accounted for large portion of booked products for the division within 2 years and is currently (2008) a key portion of new product offerings.
- 2000: Empirix was formed as a spin-out of Teradyne in January 2000. Reported to CEO in carve-out of Empirix from Teradyne.

- 1999: (Teradyne) Director of Business Development, Software Test Units. Reported directly to Chairman of the Board/Founder and then to general manager of software test unit (6 divisions of Teradyne). Evaluated and researched acquisition and partnership candidates. Internally assessed technology position in market and gaps in product lines. Worked with senior division staff to develop new product strategies. Attended internal Teradyne divisional board meetings. Chairman served as my mentor.

3Com Corporation/NBX Corporation

- 1999: Software Engineer 5. Continued work after 3Com acquisition of NBX. Built cross-division relationships for new products and research directions. NBX was acquired by 3Com in March 1999.
- 1997 - 1999: (NBX) Senior Scientist and Engineer. Work in IP Telephony. Architected next-generation product. Protocol design and validation for core protocol now used tens of millions of times daily. Led team in integration of IP protocols into current product. Designed audio reconstruction algorithms. Developed applications for bug analysis and diagnosis of system problems. Implementation of network simulator. Work on collaborative projects with external partners. Worked to identify gaps in product. Representative at numerous trade shows. Innovated novel methods of using product.

MIT Department of Electrical Engineering and Computer Science, Cambridge, MA

- 1991 - 1998: Research assistant, Telemedia Network Systems Group. Design, development, and implementation of Gigabit ATM network for distributed multimedia system. Studied host interface design issues. ATM network simulation.
- Spring 1989, Fall 1990, Spring 1995: Teaching assistant, Computation Structures digital systems course. (Spring 1995 Head TA)
- 1988 - 1989: Head laboratory teaching assistant for Computation Structures. Responsibilities included writing and revising lab assignments, and maintaining the lab.
- 1987: Laboratory teaching assistant for Computation Structures.
- 1987: Design, construction, and programming of 16-bit computer.

Agora Technology Group, Incorporated

- 1994 - 1996: Founder and CEO. Conceived and oversaw development of targeted advertising-supported Web sites. Responsible for company's vision and direction. Attended the first two WWW Conferences, presenting a workshop and paper at the first, and appearing on the “Commercialization and Economics of the Web” panel and chairing the “Where Commercial Services and the Web Are Headed” panel at the second. Sold company intact; is currently an operating stand-alone company.

AT&T Bell Laboratories, Holmdel, NJ

- 1989 - 1990: Implementation of cascadable all-optical fiber logic gate. Modelocking of all-fiber erbium laser. Construction of modelocked laser repetition rate booster. Strong optics laboratory and fiber optic experience.

- Summer 1988, 1987: Research in integrated optics. Analysis of rectangular waveguides using microwave modeling. Fabrication of integrated optical components.

Honors

- MIT Alumni Association Great Dome Award, 2010, Baker 60th Anniversary Reunion Co-Chair (highest group award given by MIT Alumni Association)
- MIT Alumni Association Presidential Citation Award (now known as Great Dome), 2008, Member of MIT Chairman's Salon committee
- MIT Alumni Association Bronze Beaver Award, 2007 (highest individual award given by MIT Alumni Association)
- MIT Alumni Association Volunteer Honor Roll, February 2004
- MIT Alumni Association Lobdell Award, 1999
- Boston Museum of Science Gold Pin for 1000 hours of Volunteer Service, April 1999
- MIT Alumni Association Presidential Citation Award (now known as Great Dome), 1997, Member of Alumni Online Communications Committee

Patents and Patent Publications

- U.S. Patent #9,697,231, H. Houh, J. Stern, R. Spina, M. Meteer, "Methods and apparatus for providing virtual media channels based on media search," July 4, 2017.
- U.S. Patent #9,697,230, H. Houh, J. Stern, "Methods and apparatus for dynamic presentation of advertising, factual, and informational content using enhanced metadata in search-driven media applications," July 4, 2017. See also WO2007056485.
- U.S. Patent #7,975,296, L. Apfelbaum, H. Houh, T. Mayberry and G. Friedman, "Automated security threat testing of web pages," July 5, 2011. See also US20030159063, WO2003067405.
- U.S. Patent #7,877,736, H. Houh and J. N. Stern, "Computer language interpretation and optimization for server testing," January 25, 2011. See also US20050138104, WO2005043300.
- U.S. Patent #7,801,910, H. Houh and J. N. Stern, "Method and apparatus for timed tagging of media content," September 21, 2010. See also US20070112837, US20090222442, WO2007056535.
- U.S. Patent #7,590,542, D. C. Williams, W. C. Hand, H. Houh, A. R. Seeley, "Method of Generating Test Scripts Using a Voice-Capable Markup Language," September 15, 2009. See also EP1530869, US20030212561, WO2003096663.
- U.S. Patent #6,967,963, H. H. Houh, P. Anderson, C. Gadda, "Telecommunication method for ensuring on-time delivery of packets containing time-sensitive data," November 22, 2005. See also EP1060400, WO2000033092, CA2318774.
- U.S. Patent #5,144,375, M. C. Gabriel, H. H. Houh, N. A. Whitaker, "Sagnac Optical Logic Gate," September 1, 1992. Also issued as European Patent # EP0456422, July 23, 1997, German Patent #DE69126913, August 28, 1997
- U.S. Patent Application Publication No. 20020015387, "Voice Traffic Packet Capture and Analysis Tool for a Data Network" (Abandoned in 2007)

- U.S. Patent Application Publication No. 20020016708, "Method and Apparatus for Utilizing a Network Processor as Part of a Test System" (Abandoned in 2007)
- U.S. Patent Application Publication No. 20020016937, "Method and Apparatus for Utilizing a Network Processor as Part of a Test System." (Abandoned in 2007) See also WO2002011413.
- U.S. Patent Application Publication No. 20070106646, "User-directed navigation of multimedia search results" (Abandoned in 2009)
- U.S. Patent Application Publication No. 20070106660, "Method and apparatus for using confidence scores of enhanced metadata in search-driven media applications" (Abandoned in 2009)
- U.S. Patent Application Publication No. 20070106685, "Method and apparatus for updating speech recognition databases and reindexing audio and video content using the same" (Abandoned in 2015)
- U.S. Patent Application Publication No. 20070118873, "Methods and apparatus for merging media content" (Abandoned in 2015)
- U.S. Patent Application Publication No. 20090222442, "User-directed navigation of multimedia search results" (Abandoned in 2016)
- U.S. Patent Application 11/395,732, "Search snippet creation for audio and video data" (Abandoned in 2009)
- U.S. Patent Application 11/774,931, "Methods and apparatus for managing a social networking web site"
- U.S. Patent Application 11/774,947, "Methods and apparatus for organizing media files"
- U.S. Patent Application 11/774,956, "Methods and apparatus for managing an online event"
- U.S. Provisional Patent Application 61/086,909, "Measuring and ranking relationship activity"
- U.S. Provisional Patent Application 61/086,914, "Detecting media object commonality"
- U.S. Provisional Patent Application 61/086,904, "Message categorization based on message characteristics"
- U.S. Provisional Patent Application 61/086,905, "Photo tagging to request action"

Trials, Testimony and Depositions

- Case No. 1:06CV682 (CMH/BRP), Verizon vs. Vonage, U.S. District Court for the Eastern District of Virginia, filed expert report, was deposed and testified at trial.
- Case No. 1:08CV157 (CMH/TRJ), Verizon vs. Cox, U.S. District Court for the Eastern District of Virginia, was deposed and testified at trial.
- Case No. 5:09-cv-476, Two-Way Media vs. AT&T, U.S. District Court for the Western District of Texas, filed expert report, testified at trial.
- Case No. 2:10-cv-248 (RAJ/FBS), ActiveVideo Networks vs. Verizon, U.S. District Court for the Eastern District of Virginia, filed expert report and was deposed as an expert witness.
- Case No. 1:11-cv-00880-TSE-JFA, Bear Creek Technologies, Inc. vs. Verizon Services Corp., et al, U.S. District Court for the Easter District of Virginia, was deposed as an expert witness.

- Case No. 3:10-CV-298-BBC, AlmondNet, Inc. vs. Microsoft Corp., U.S. District Court for the Western District of Wisconsin, filed expert report.
- Case No. 6:10-cv-00597, Guardian Media Technologies, Ltd. Vs. AT&T Operations, Inc. et al., U.S. District Court for the Eastern District of Texas, Tyler Division, filed expert report.
- Case No. ESCV2010-02282C, The Octopus Solution LLC v. Gary Brown et al., Essex, MA Superior Court, testified at trial.
- Investigation No. 337-TA-882, In the matter of Certain digital media devices, including televisions, Blu-ray disc players, home theater systems, tablets and mobile phones, components thereof and associated software, U.S. International Trade Commission, filed expert reports, was deposed and testified at hearing.
- Investigation No. 337-TA-995, In the matter of Certain communications or computing devices, and components thereof, U.S. International Trade Commission, filed expert reports, and was deposed.
- Case No. 8:12-cv-122-LES-TDT, Prism Technologies LLC v. AT&T Mobility LLC, U.S. District Court for the District of Nebraska, filed expert report, was deposed and testified at trial.
- Case No. 11-2684 (JWL), Sprint Communications Co., L.P., v. Comcast Cable Communications, LLC, et al., U.S. District Court for the District of Kansas, filed expert report and was deposed.
- Case No. 11-2686 (JWL), Sprint Communications Co., L.P., v. Time Warner Cable, Inc., et. al., LLC, et al., U.S. District Court for the District of Kansas, filed expert report, was deposed, and testified at trial.
- Case No. 12-487 (SLR), Cox Communications, Inc., et al., v. Sprint Communications Company L.P., et al., U.S. District Court for the District of Delaware, filed expert report and was deposed.
- Case IPR 2014-00039, Microsoft Corporation v. B.E. Technology LLC, U.S. Patent No. 6,628,314. Submitted declaration and cross-examined in deposition.
- Case IPR 2014-00086, Apple, Inc. v. Evolutionary Intelligence, LLC, U.S. Patent No. 7,010,536. Submitted declaration and cross-examined in deposition.
- Case No. 6:11-CV-421, Stragent, LLC v. Intel Corporation, U.S. District Court for the Eastern District of Texas, Tyler Division, deposed and testified at trial as a fact witness.
- IPR2014-01366, IPR2014-01367, IPR2014-01368, Samsung et al. v. Straight Path, submitted IPR declarations and was deposed.
- IPR2015-1006, IPR2015-1007, Cisco v. Straight Path, submitted IPR declarations.
- IPR2014-01457, IPR2014-01459, Microsoft v. Biscotti, submitted IPR declaration and was deposed.
- IPR2016-00302, Apple v. Nonend, submitted IPR declaration.
- IPR2014-00812, Yelp and Twitter v. Evolutionary Intelligence, submitted IPR declaration.
- IPR2015-00307, Cisco v. AIP, submitted IPR declaration.
- Microsoft v. Acacia, submitted IPR declaration.
- IPR2015-00342, AT&T Mobility LLC and Cellco Partnership d/b/a Verizon Wireless v. Solocron, submitted IPR declaration.
- Mediatube v. Bell Canada, Canadian Federal Court, submitted expert report and testified at trial.

I

- CBM2016-00036, Google v. At Home Bondholder's Liquidating Trust, submitted CBM declaration.
- IPR2016-01198, IPR2016-01201, Apple, Inc. v. VoIP-Pal.com, Inc., submitted IPR declaration and was deposed.
- Case No. 3:14-cv-2824-VC, Trend Micro Incorporated v. Rpost Holdings, Inc., et al, submitted expert report and was deposed
- Akamai v. Limelight Networks, IPR2016-01631, IPR2016-01711, IPR2017-00249, IPR2017-00349, submitted IPR declarations and was deposed
- Hyperlync Technologies v. Verizon Sourcing, No. 650151/2015 New York Supreme Court, submitted declaration and was deposed
- Cascades Streaming Technologies v. Big Ten Networks, submitted expert reports and was deposed
- Klaustech, Inc. v. Google LLC., Case No. 4:10-CV-05899-JSW (N.D. Cal.), submitted expert report and was deposed
- Cisco v. Uniloc, IPR2017-00198, IPR2017-00058, submitted IPR declarations and was deposed.
- Cisco v. Uniloc, IPR2017-00597, submitted IPR declaration and was deposed
- Twitter v. Youtoo Technologies, LLC, IPR2017-01133, IPR2017-01131, submitted IPR declarations and was deposed
- Taser International Inc. (now Axon Enterprise, Inc.) v. Digital Ally Inc., IPR2017-00375, submitted IPR declaration and was deposed
- Taser International Inc. (now Axon Enterprise, Inc.) v. Digital Ally Inc., IPR2017-00376, IPR2017-00515, IPR2017-00775, submitted IPR declarations
- HTC Corporation v. IPA Technologies, IPR2018-00306, IPR2018-00307, submitted IPR declaration
- Hulu v. Soundview, IPR2018-00864, IPR2018-01023, submitted IPR declarations and was deposed
- XpertUniverse v. Cisco, 3:17-cv-3848, U.S. District Court for Northern District of California, submitted declaration in support of claim construction and was deposed
- Improved Search v. Microsoft, C.A. No. 16-cv-650-JFB-SRF (Del.), submitted declaration in support of claim construction
- Apple v. Uniloc, IPR2018-00361, IPR2018-00394, IPR2018-00395, IPR2019-00700, IPR2019-00701, IPR2019-01667, submitted IPR declarations
- LG Electronics v. Uniloc, submitted IPR declaration
- SRC Labs and Saint Regis Mohawk Tribe v. Microsoft, 2:18-cv-00321-JLR, U.S. District Court for Western District of Washington at Seattle, submitted declaration in support of claim construction and was deposed
- Verizon Wireless v. Barkan Wireless IP Holdings LP, submitted IPR declarations
- Verizon Wireless and Samsung Electronics America Inc. v. Barkan Wireless IP Holdings LP, IPR2019-199, IPR2019-200, IPR2019-234, IPR2019-631, IPR2019-632, submitted IPR declarations
- Samsung Electronics America Inc. v. Barkan Wireless IP Holdings LP, IPR2019-100, submitted IPR declaration
- Cisco Systems Inc. v. Meetrix IP LLC, IPR2019-539, IPR2019-540, IPR2019-541, IPR2019-542, IPR2019-543, IPR2019-544, submitted IPR declarations

- GMG Products LLC v. Traeger Pellet Grills LLC, PGR2019-24, PGR2019-34, PGR2019-35, PGR2019-36, submitted PGR declaration and was deposed
- Uniloc 2017 LLC v. Google LLC, 2:18-cv-00502-JRG-RSP, U.S. District Court for the Eastern District of Texas, Marshall Division, submitted declaration in support of claim construction
- Microsoft Corporation v. Uniloc 2017 LLC, IPR2020-00102, IPR2020-00103, submitted IPR declarations
- Microsoft Corporation and HP Inc. v. Synkloud Technologies, LLC, IPR2020-00316, IPR2020-01031, IPR2020-01032, IPR2020-01269, IPR2020-01270, IPR2020-01271, submitted IPR declarations
- Seven Networks, LLC v. Apple Inc, 2:19-cv-115-JRG, U.S. District Court for the Eastern District of Texas, Marshall Division, submitted declaration in support of claim construction
- Unified Patents Inc. v. Ortiz & Associates Consulting, LLC, IPR2019-00743, submitted IPR declaration
- Uniloc 2017 LLC v. Apple Inc., 3:19-cv-01905-JD, U.S. District Court for the Northern District of California, San Francisco Division, submitted declaration in support of claim construction and was deposed
- ClearPlay Inc. v. Dish Network LLC et al.; 2:14-cv-00191, U.S. District Court for the District of Utah, Central Division, submitted expert report and re-examination declarations
- AMC Networks, Inc. et al v. Sound View Innovations, LLC, IPR2020-00482, submitted IPR declaration
- Case No. 1:17-cv-01734-RGA, Sprint Communications Co., L.P., v. Charter Communications, Inc., et al., U.S. District Court for the District of Delaware, filed expert report and was deposed.
- CommScope Technologies LLC et al. v. Barkan Wireless IP Holdings LP et al., IPR2020-00827, IPR2020-00829, IPR2020-00831, IPR2020-00833, IPR2020-00835, IPR2020-00838, submitted IPR declarations
- Cisco Systems Inc. v. Monarch Networking Solutions LLC, IPR2020-01226, submitted IPR declaration
- CoolTV Network.com v. Blackboard, Inc., Facebook, Inc., International Business Machines Corporation, Kaltura, Inc., Limelight Networks, Inc., Microsoft Corporation, Ooyala, Inc., Snap, Inc., and Trapelo Corp., submitted declaration in support of claim construction and was deposed
- Facebook, Inc. v. Onstream Media Corporation, IPR2020-01507, IPR2020-01508, IPR2020-01525, IPR2020-01527, IPR2020-01528, submitted IPR declarations
- Hisense Co LTD. v. Maxell, LTD, IPR2020-01598, IPR2020-01600, submitted IPR declarations
- Microsoft Corp. v. O'Brien, IPR2021-00015, submitted IPR declaration and was deposed
- Sable Networks Inc. v. Cisco Systems, Inc., WA:20-CV-00288-ADA, U.S. District Court for the Western District of Texas, Waco Division, submitted declaration in support of claim construction
- Peloton Interactive, Inc. v. Icon Health and Fitness Inc et al., IPR2021-00342, submitted IPR declaration

K

- Hulu, LLC v. SITO Mobile R&D IP, LLC et al., CBM2020-00028, IPR2020-00158, IPR2020-00206 , IPR2020-00219 , IPR2020-00265 , IPR2020-00298 , IPR2020-00304 , IPR2020-00308 , submitted CMB and IPR declarations and was deposed
- Twitter, Inc. and Google LLC v. B.E. Technology, LLC, IPR2021-00482, IPR2021-00483, IPR2021-00484, IPR2021-00485, submitted IPR declarations
- MG Freesites LTP v. ScorpCast, LLC, IPR2021-00511, submitted IPR declaration
- Avionte, LLC v. Sandeep Acharya, Samar Basnet, and Aqore LLC, Arbitration, Hon. Jeffrey Keyes (Ret.)
- Microsoft Corporation v. WSOU Investments, LLC d/b/a Brazos Licensing and Development, IPR2021-00751, submitted IPR declaration
- SAP America, Inc. v. Express Mobile, Inc., IPR2021-01144, IPR2021-01145, IPR2021-01146, submitted IPR declarations
- StratosAudio Inc. v. Hyundai Motor America, 6:20-cv-01125-ADA, U.S. District Court for the Western District of Texas, Waco Division, submitted claim construction declaration and was deposedPeloton Interactive, Inc. v. Ifit Health and Fitness Inc, IPR2022-00029, IPR2022-00030, submitted IPR declarations and was deposed
- Investigation No. 337-TA-1263, In the matter of Certain televisions, remote controls, and components thereof, U.S. International Trade Commission, filed expert reports, was deposed, and testified at hearing
- Alexander Stross v. Netease, Inc., et al., U.S. District Court (Central District of California), Case 2:20-cv-00861-AB(JC), filed expert reports, and was deposed
- Ralph Ledergerber v. Netease, Inc., et al., U.S. District Court (Central District of California), Case 2:20-cv-00862-AB(JC), filed expert reports and was deposed
- John Walmsley v. Netease, Inc., et al., U.S. District Court (Central District of California), Case 2:20-cv-00863-AB(JC), filed expert reports and was deposed
- Bernhard Kuhmstedt v. Netease, Inc., et al., U.S. District Court (Central District of California), Case 2:20-cv-02044-AB(JC), filed expert reports and was deposed
- Netflix, Inc. v. CA, Inc., IPR2021-01319, submitted IPR declaration and was deposed
- F45 Training Pty Ltd. v. Body Fit Training USA Inc., C.A. No. 20-1194 (LPS) (D. Del.), filed expert report
- Apple v. Fintiv, submitted IPR declarations
- Estech Systems, Inc. v. Howard Midstream Energy Partners d/b/a Howard Energy Partners, C.A. No. 6:20-cv-777-ADA (Western District of Texas, Waco Division), filed expert reports and was deposed
- Echelon Fitness Multimedia, LLC. v. Peloton Interactive, Inc., IPR2020-01187, submitted IPR declaration and was deposed
- Microsoft Corporation v. SurfCast, Inc., submitted IPR declarations
- MemoryWeb, LLC v. Samsung Electronics Co., LTD. and Samsung Electronics America, Inc., Case No. 6:21-cv-00411-ADA (Western District of Texas, Waco Division), filed declaration and was deposed

Publications

- "IP switching: server driven flow classification," H. H. Houh, *Proceedings of the Washington University Workshop on Integration of IP and ATM* , November 1996.

L

- "Aurora at MIT," D. D. Clark, H. H. Houh, and D. L. Tennenhouse, Editors, *MIT Laboratory for Computer Science Technical Report 673*, December 1995.
- "ViewStation Applications: Implications for Network Traffic," C. J. Lindblad, D. Wetherall, W. Stasior, J. F. Adam, H. H. Houh, M. Ismert, D. Bacher, B. Phillips, and D. L. Tennenhouse, *IEEE Journal of Selected Areas in Communications*, 1995.
- "The VuNet Desk Area Network: Architecture, Implementation, and Experience," H. H. Houh, J. F. Adam, M. Ismert, C. J. Lindblad, and D. L. Tennenhouse, *IEEE Journal of Selected Areas in Communications*, 13 (4), May, 1995.
- "Reducing the Complexity of ATM Host Interfaces," H. H. Houh and D. L. Tennenhouse, Hot Interconnects II Symposium Proceedings, Stanford, August 11-12, 1994.
- "Media-intensive data communications in a `desk-area' network," J. F. Adam, H. H. Houh, M. Ismert, and D. L. Tennenhouse, IEEE Communications, August 1994.
- "ViewStation Applications: Intelligent Video Processing Over A Broadband Local Area Network," C. J. Lindblad, D. J. Wetherall, W. Stasior, B. Phillips, D. Bacher, J. Adam, H. Houh, M. Ismert, and D. L. Tennenhouse, Proceedings of the 1994 USENIX Symposium on High-Speed Networking, Oakland, CA, August 1994.
- "The Media Gateway: Live Video on the World Wide Web," H. H. Houh, C. J. Lindblad, J. Soo, D. L. Tennenhouse, and D. J. Wetherall, Workshop at the 1994 World Wide Web Conference, Geneva, Switzerland, May 1994.
- "Active Pages: Intelligent Nodes on the World Wide Web ," H. H. Houh, C. J. Lindblad, and D. J. Wetherall, Proceedings of the 1994 World Wide Web Conference, Geneva, Switzerland, May 1994.
- "Wavelength Division vs. Code Division Access Methods for Optical Networks," H. H. Houh, Area Exam Paper, May 1993.
- "Experience with the VuNet: A Network Architecture for a Distributed Multimedia System," J. F. Adam, H. H. Houh, D. L. Tennenhouse, Proceedings of the 18th Conference on Local Computer Networks, pp. 70-76, September 1993
- "The VudBoard: A Simple DMA Interface," H. H. Houh, Proceedings of the 4th Gigabit Minijam, January 1994.
- "A Software-Oriented Approach to the Design of Media Processing Environments," D. L. Tennenhouse, J. Adam, D. Carver, H. Houh, M. Ismert, C. Lindblad, W. Stasior, D. Weatherall, D. Bacher, and T. Chang., submitted to the International Conference on Multimedia Computing and Systems, May 1994.
- "A Network Architecture for Distributed Multimedia Systems," J. F. Adam, H. H. Houh, M. Ismert, and D. L. Tennenhouse, submitted to the International Conference on Multimedia Computing and Systems, May 1994.
- "The Viewstation Collected Papers," D. L. Tennenhouse, J. Adam, C. Compton, A. Duda, D. Gifford, H. Houh, M. Ismert, C. Lindblad, W. Stasior, R. Weiss, D. Wetherall, D. Bacher, D. Carver, and T. Chang, MIT Laboratory for Computer Science Technical Report, MIT/LCS/TR-590, November 1993.
- "The Viewstation Collected Papers II," W. F. Stasior, D. L. Tennenhouse, J. F. Adam, D. R. Bacher, H. H. Houh, M. Ismert, C. J. Lindblad, B. M. Phillips, D. J. Wetherall, MIT Laboratory for Computer Science Technical Report, MIT/LCS/TR-696, April 1996.

M

- "A System's Perspective of the Sagnac Fiber Logic Gates and Their Possible Applications," A. Huang, N. Whitaker, C. Gabriel, H. Avramopoulos, P. M. W. French, H. H. Houh, and I. Chuang, Applied Optics, September 10, 1994
- "Complete Switching in a Three-Terminal Sagnac Switch," H. Avramopoulos, P. M. W. French, M. C. Gabriel, H. H. Houh, N. A. Whitaker, T. Morse, IEEE Phot. Tech. Lett. **3** (3), 235
- "Complete Switching in a Three-Terminal Sagnac Switch," H. Avramopoulos, P. M. W. French, M. C. Gabriel, H. H. Houh, N. A. Whitaker, IEEE/LEOS Annual Meeting, Paper PDP-13, November 1990
- "All-optical phase-locked oscillator," N. A.Whitaker, Jr., H. H. Houh, H. Avramopoulos, T. F. Morse, IEEE/LEOS Annual Meeting, Paper ELT2.4/MOO3, November 1990
- "Passive modelocking of an all-fiber erbium laser," H. Avramopoulos, H. H. Houh, N. A. Whitaker, M. C. Gabriel, T. F. Morse, IEEE/LEOS Conference on Optical Amplifiers and their Applications, Paper PDP-8, August 1990
- "Transverse modes, waveguide dispersion, and 30ps recovery in submicron GaAs/AlAs microresonators," J. L. Jewell, S. L. McCall, A. Scherer, H. H. Houh, N. A. Whitaker, A. C. Gossard, and J. H. English, Appl. Phys. Lett. **55** (1), July 3, 1989

Leadership, Activities and Interests

- Leadership
  - Discovery Museums (Acton, MA)
    - Science and Technology Advisory Council, 2012 - present
  - MIT Alumni Association Board of Directors
    - National Selection Committee, 3 year term, 2020 – 2023
    - K-12 STEM Initiatives Co-chair, 2013 – 2017
    - Awards Committee Chair, 2012 – 2014
    - Awards Committee, 3 year term, 2011 – 2014
    - Vice President, 2 year term, 2004 – 2006
    - Alumni Ad-Hoc Committee, Chair, 2005-2006
    - Board Member, 2 year term, 1997 – 1999
  - MIT Club of Boston
    - Board of Directors, 2006 - 2011
    - K-12 Initiatives Chair, 2009 - 2012
    - VP of Communications, MIT Club of Boston, 2003 - 2006
    - Past-President, MIT Club of Boston, 2002 - 2003
    - President, MIT Club of Boston, 2001 - 2002
    - President-Elect, MIT Club of Boston, 2000 - 2001
    - VP of Programs, MIT Club of Boston, 1999 - 2000
    - Activities Super-Chair, MIT Club of Boston, 1998 - 1999
  - MIT Enterprise Forum of Cambridge, Inc.
    - Past Chair, 2009 – 2011
    - In-NOW-vation Co-chair, 2010
    - Chair, 2007 - 2009
    - Vice Chair, 2005 - 2007
    - Executive Board Member, 2002 - 2011

        - Winter Workshop Co-Chair, February 2007 - conceived idea for conference, which sold-out and produced largest attendance numbers in recent memory
        - Spring Workshop Co-Chair, Spring 2004
        - Membership Committee Chair, Fall 2003 - 2006
        - 25th Anniversary Dinner Chair, Fall 2003
        - As Membership Chair and Board Member, started Special Interest Groups in 2004; a SIG won the MIT Presidential Citation award, the MIT Alumni Association's highest award for organizations, in 2006
    - Estabrook Elementary School PTA
        - Advisory committee to the superintendent on PCB issue, 2010-2011
        - 4th Grade after-school science program co-organizer, 2010-2012
        - 4th and 5th Grade before-school Math Olympiad co-organizer, 2009-2013
        - 5th Grade BBQ and Yearbook Committee, 2011, 2013
        - Family Math Night volunteer, 2008-2012
    - Tau Beta Pi National Engineering Honor Society
        - Advisor, MA B Chapter at MIT, 2003 - present
        - District Director (National Officer), Tau Beta Pi, New England Area, 1991 - 2003
        - President, MA B Chapter at MIT, Fall 1988 - Spring 1989
        - Laureate award, 1989
    - MIT Class of 1989
        - Secretary, five consecutive 5 year terms, 1989 - 2014
        - 30-year Reunion Committee, 2019
        - 25-year Reunion Committee, 2014
        - 20-year Reunion Committee and Gift Committee, 2009
        - 15-year Reunion Committee and Gift Committee, 2004
        - 10-year Reunion Committee and Gift Committee, 1999
        - 5-year Reunion Committee, 1994
        - Interim Treasurer, 1993 - 1994
        - Instituted annual senior class career fair, now raising over $100,000 annually for senior class activities, Fall 1988
    - Strong, consistent record of leadership dating to high school
- Acting
    - '21' (Sony Pictures), credited as "Chinatown Dealer," 2007, Kevin Spacey's movie about the MIT Blackjack Team inspired by "Bringing Down the House" by Ben Mezrich, opened nationwide on March 28, 2008. 21 was the number one movie in US for two weeks and number one globally for one week. 21 also topped the DVD sales, Blu-ray sales and DVD rental charts.
    - Spring Lake Theater Company, first New York-area off-broadway production of "A Chorus Line," played role of Mark, Summer 1990
- Former member of the MIT Blackjack team
- Producer for 10,000 Maniacs' 2013 album "Music from the Motion Picture"
- Executive Producer for 10,000 Maniacs' 2015 album "Twice Told Tales"
- Violist, violist, harpist, guitarist, singer, actor: played in many amateur/semi-professional groups including Reading Symphony Orchestra, MIT Summer Philharmonic Orchestra,

O

Freisinger Chamber Orchestra, Merrimack Valley Philharmonic, Longwood Symphony, MIT Symphony, and Somerville Community Chorus

- Violist, "Coming Home" album by Karen Phillips, 2014
- Google Scholar citations: 1914, h-index: 21, i10-index: 26 (since 2016: 649/13/13)
- Erdos-Bacon number of 7
- Erdos-Bacon-Sabbath number of 11

P

CommScope v. Dali Wireless
CommScope Exhibit 1012