(12) International Application Published Under the Patent Cooperation Treaty

(19) World Intellectual Property Organization
International Bureau
(43) International Publication Date
February 19, 2009 (02/19/2009)

[logo:] World Intellectual Property Organization
PCT

(10) International Publication No.
WO 2009/021359 A1

(51) International Patent Classification No.:
H04Q 7/36 *(2006.01)*
(21) International Application No.: PCT/CN2007/002437
(22) International Application Date: August 14, 2007 (08/14/2007)
(25) Language Used for Application: Chinese
(26) Language Used for Publication: Chinese
(71) Applicant (only for China)**: ALCATEL SHANGHAI BELL CO., LTD.**
[CN/CN]; No. 388 Ningqiao Road, Pudong New Area, Shanghai 201206, China (CN).
(71) Applicant (for all designated countries except China and the US): **ALCATEL LUCENT** [FR/FR]; No. 54 Rue De La Boetie 75008 Paris France (FR).
(72) Inventor: and
(75) Inventor/applicant (only for the US)**: LENG Xiaobing**
[CN/CN]; No. 388 Ningqiao Road, Pudong New Area, Shanghai 201206, China (CN). **ZOU Wei** [CN/CN] No. 388 Ningqiao Road, Pudong New Area, Shanghai 201206, China (CN). **JIN Shan** [CN/CN]; No. 388 Ningqiao Road, Pudong New Area, Shanghai 201206, China (CN).
(74) Agent: CHINA SCIENCE PATENT & TRADEMARK AGENT LTD.; 25/F, Tower B, Tsinghua Tongfang Hi-Tech Plaza, No. 1, Wangzhuang Road, Haidian District, Beijing 100083, China (CN).
(81) Designated country (unless otherwise specified, every available country protection is required):
AE, AG, AL, AM, AT, AU, AZ, BA, BB, BG, BH, BR, BW, BY, BZ, CA, CH, CN, CO, CR, CU, CZ, DE, DK, DM, DO, DZ, EC, EE, EG, ES, FI, GB, GD, GE, GH, GM, GT, HN, HR, HU, ID, IL, IN, IS, JP, KE, KG, KM, KN, KP, KR, KZ, LA, LC, LK, LR, LS, LT, LU, LY, MA, MD, ME, MG, MK, MN, MW, MX, MY, MZ, NA, NG, NI, NO, NZ, OM, PG, PH, PL, PT, RO, RS, RU, SC, SD, SE, SG, SK, SL, SM, SV, SY, TJ, TM, TN, TR, TT, TZ, UA, UG, US, UZ, VC, VN, ZA, ZM, ZW.
[see continuation pages]

(54) Title: CELL MANAGEMENT SET, DISTRIBUTED ANTENNAE SYSTEM AND REASSIGNMENT METHOD THEREOF

(54) Title of Invention: Cell management unit, distributed antenna system and reconfiguration method thereof

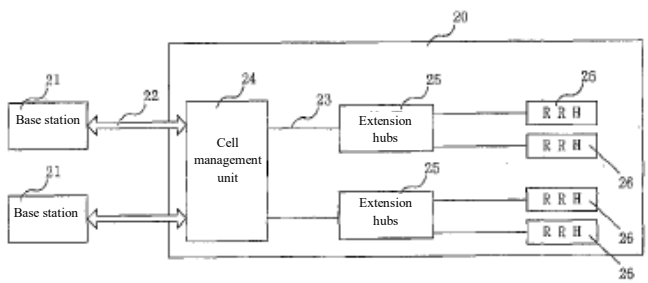

Fig. 2

(57) Abstract: The invention discloses a distributed antennae system including remote radio heads and a cell management set connected to the remote radio heads via an extension hub, the cell management set connects to a BS for transmitting downlink radio signals to the remote radio heads, collecting uplink radio signals and transmitting them to the BS, and collecting load information of the distributed antennae system and reassigning the distributed antennae system based on the load information. The invention discloses a cell management set and a reassignment method of the distributed antennae system. The invention can dynamically effectually reassign the distributed antennae system in time based on a real-time load distributing condition, balance the load in time and improve the efficiency of the system, and most improve the convenient character, the real-time character and the veracity for the assignment synchronously, and achieve reassignment on line without interrupting the service, ensure the continuity for the service.

[see continuation pages]

WO 2009/021359 A1

T-Mobile v. Dali Wireless
T-Mobile Exhibit 1016

(84) Designated country (unless otherwise specified, every available region protection is required): ARIPO (BW, GH, GM, KE, LS, MW, MZ, NA, SD, SL, SZ, TZ, UG, ZM, ZW), Eurasian (AM, AZ, BY, KG, KZ, MD, RU, TJ, TM), Europe (AT, BE, BG, CH, CY, CZ, DE, DK, EE, ES, FI, FR, GB, GR, HU, IE, IS, IT, LT, LU, LV, MC, MT, NL, PL, PT, RO, SE, SI, SK, TR), OAPI (BF, BJ, CF, CG, CI, CM, GA, GN, GQ, GW, ML, MR, NE, SN, TD, TG).

International Publication:
– Including international search report.

(57) Abstract:

The present disclosure relates to a distributed antenna system, including remote radio heads and a cell management unit connected to the remote radio heads via an extension hub, wherein the cell management unit is connected to a base station configured to transmit downlink radio signals to the remote radio heads, collect uplink radio signals and transmit them to the base station, and collect the load information of the distributed antenna system and reconfigure the distributed antenna system based on the load information. The present disclosure also relates to a cell management unit and a reconfiguration method of a distributed antenna system. The present disclosure is capable of dynamically reconfiguring the distributed antenna system in a timely and effective manner according to the real-time load distribution situation, balancing the load and improve the system efficiency in a timely manner, and at the same time greatly improving the convenience, real-time nature and accuracy of the configuration, and realizing online reconfiguration without the interruption of services, ensuring the continuity of services.

T-Mobile v. Dali Wireless
T-Mobile Exhibit 1016

Cell Management Unit, Distributed Antenna System and Reconfiguration Method Thereof

Technical Field

The present disclosure relates to a distributed antenna system technology, and in particular to a cell management unit, distributed antenna system and reconfiguration method thereof, which are capable of efficiently reassigning carriers in a timely and efficient manner to adapt to load changes when the communication traffic of a region varies greatly.

Background Art

A distributed antenna system (DAS) can improve the capacity and coverage area of wireless systems, especially for improving indoor coverage area. The current trend in distributed antenna systems is to use fiber optic or unshielded twisted pair/shielded twisted pair (UTP/STP) cables to transmit digital radio signals, which are primarily digital baseband signals.

Fig. 1 shows the basic structure of an existing digital distributed antenna system 10. Remote radio heads (RRHs) 17 are placed around the building. The primary hub 14 and the extension hubs 16 distribute downlink radio signals to the remote radio heads 17 and collect uplink radio signals for the base station 11. Since the transmitted signals are digital radio signals, it is easy to support multiple carriers and multiple base stations at the same time.

In general, once a distributed antenna system has been installed, the allocation of the radio frequency spectrum is fixed. This mode of operation is not suitable for areas where communication traffic varies greatly, such as auditoriums, conference halls, and the like. If too much spectrum is allocated to such areas, the spectrum resources will be wasted when these areas are idle. However, if only a small amount of spectrum resources is allocated to these areas, spectrum resources may be insufficient when these areas become crowded.

The disadvantages of most existing distributed antenna systems are that carriers cannot be reassigned in time to effectively adapt to load changes when the communication traffic in an area varies greatly, so the above technical problems cannot be effectively solved. Some of these distributed antenna systems have a manual offline reconfiguration feature, which requires the administrator to perform manual reconfiguration based on the expected load distribution, and this requires services to be stopped during the reconfiguration. Obviously, this reconfiguration approach does not allow for dynamic reconfiguration in a timely and efficient manner based on real-time traffic assignment, and does not allow for service continuity during reconfiguration.

Summary of the Invention

The present disclosure was completed in view of the above problems. The purpose of the present disclosure is to propose a cell management unit, a distributed antenna system and a reconfiguration method thereof, which are capable of reassigning carriers in a timely and efficient manner to adapt to load changes when the communication traffic of a region varies greatly.

T-Mobile v. Dali Wireless
T-Mobile Exhibit 1016

According to one aspect of the present disclosure, a distributed antenna system is provided, comprising remote radio heads and a cell management unit connected to the remote radio heads via an extension hub, wherein the cell management unit is connected to a base station configured to transmit downlink radio signals to the remote radio heads, collect uplink radio signals and transmit them to the base station, and collect the load information of the distributed antenna system and reconfigure the distributed antenna system based on the load information.

According to another aspect of the present disclosure, a cell management unit is provided, which is connected to a base station and connected to remote radio heads via an extension hub, configured to distribute downlink radio signals to the remote radio heads, collect uplink radio signals and transmit them to the base station, and collect the load information of the distributed antenna system and reconfigure the distributed antenna system according to the load information.

According to a third aspect of the present disclosure, a method for reconfiguring a distributed antenna system is provided, comprising: the collection of the load information of the distributed antenna system by the cell management unit and the reconfiguration of the distributed antenna system based on the load information.

With the present disclosure, a distributed antenna system can be dynamically reconfigured in a timely and effective manner according to the real-time load distribution, balancing the load and improving the system efficiency in a timely manner, while greatly improving the convenience, real-time nature and accuracy of the configuration, and it is capable of realizing online reconfiguration without the interruption of services, ensuring the continuity of services.

Brief Description of the Attached Drawings

In order to provide a clearer understanding of the above and other objectives, characteristics and advantages of the present disclosure, the specific embodiments of the present disclosure are described in detail with the drawings below, wherein:

Fig. 1 is a basic structural diagram of a conventional digital distributed antenna system;

Fig. 2 is a structural diagram of a distributed antenna system according to a first embodiment of the present disclosure;

Fig. 3 is a structural diagram of a distributed antenna system according to a second embodiment of the present disclosure;

Fig. 4 is a schematic diagram of a reconfiguration principle of a distributed antenna system according to a second embodiment of the present disclosure;

Fig. 5 is another schematic diagram of a reconfiguration principle of a distributed antenna system according to a second embodiment of the present disclosure;

Fig. 6 is a structural diagram of a distributed antenna system according to a third embodiment of the present disclosure;

Fig. 7 is a process flowchart of a method for reconfiguring a distributed antenna system according to a third embodiment of the present disclosure;

Fig. 8 is a structural diagram of a distributed antenna system according to a fourth embodiment of the present disclosure;

Fig. 9 is a schematic diagram of a topology reconfiguration principle according to a fourth embodiment of the present disclosure;

Fig. 10 depicts an initial state of an example of carrier reconfiguration in the fourth embodiment of the present disclosure;

Fig. 11 depicts an intermediate state of an example of carrier reconfiguration in the fourth embodiment of the present disclosure;

Fig. 12 depicts the final state of an example of carrier reconfiguration in the fourth embodiment of the present disclosure;

Fig. 13 depicts an initial state of another example of carrier reconfiguration in the fourth embodiment of the present disclosure;

Fig. 14 depicts the final state of another example of carrier reconfiguration in the fourth embodiment of the present disclosure;

Fig. 15 is a structural diagram of a distributed antenna system according to a fifth embodiment of the present disclosure;

Fig. 16 is the process flowchart of the reconfiguration of a distributed antenna system according to a fifth embodiment of the present disclosure;

Fig. 17 is a schematic diagram of a second dynamic reconfiguration module according to a fifth embodiment of the present disclosure and the working principle of the dynamic reconfiguration module;

Fig. 18 is another schematic diagram of the second dynamic reconfiguration module according to a fifth embodiment of the present disclosure and the working principle of the dynamic reconfiguration module;

Fig. 19 is a diagram of the second dynamic reconfiguration module according to a fifth embodiment of the present disclosure and the process flow of the dynamic reconfiguration module.

Specific Embodiments

The embodiments of the present disclosure are explained in detail below with reference to the accompanying drawings, and details and functions that are not necessary for the present disclosure are omitted in the description to avoid confusion in the understanding of the present disclosure.

As shown in Fig. 2, an embodiment of the present disclosure provides a distributed antenna system 20 comprising at least one remote radio head (RRH) 26 and a cell management unit (CMU) 24 connected to the remote radio heads 26 via at least one extension hub 25. The cell management unit 24 is connected to the base station 21, and is configured to distribute downlink radio signals to the remote radio head 26, collect uplink radio signals and transmit them to the base station 21, and collect the load information of the distributed antenna system 20 and reconfigure the distributed antenna system 20 based on the load information.

According to an embodiment of the present disclosure, the cell management unit (CMU) 24 is the control center of the distributed antenna system 20, and the cell management unit 24 is connected to the base station 21 and connected to the remote radio heads 26 via the extension hub 25 for distributing downlink radio signals to the remote radio heads 26, collecting uplink radio signals and transmitting them to the base station 21, and collecting the load information of the distributed antenna system 20 and reconfiguring the distributed antenna system 20 according to the load information. The interface 22 between the CMU 24 and the base station 21 can be the standard Open Base Station Architecture Initiative interface (OBSAI), the Common Public Radio Interface (CPRI), or a special local communication interface.

An extension hub 25 is used to aggregate and distribute I/Q data to an extended coverage area. The remote radio heads (RRHs) 26 are used for digital filtering, analog/digital-to-analog conversion, and analog front-end functions. The transmission medium 23 of the distributed antenna system 20 may be an optical fiber or a UTP/STP cable, etc., the transmission network may be Gigabit Ethernet, and the transmitted radio signals are digital baseband signals.

According to an embodiment of the present disclosure, the distributed antenna system 20 can support multiple carriers and multiple base stations, of which the RRHs can also support multiple carriers. The number of carriers supported depends on the wireless technology used and its operating bandwidth. For example, for 5 MHz WiMAX technology, the digital baseband signal traffic is 137 Mbps. Considering an overhead of 25%, the traffic would be 171.25 Mbps, so a Gigabit Ethernet link can support five carriers.

According to an embodiment of the present disclosure, a method for reconfiguring a distributed antenna system is also provided, comprising: the collection of the load information of the distributed antenna system 20 by the cell management unit 24 and the reconfiguration of the distributed antenna system 20 based on the load information.

According to the distributed antenna system 20 and its reconfiguration method provided by an embodiment of the present disclosure, the distributed antenna system 20 is reconfigured by the CMU 24 based on the collected load information, instead of via manual configuration during service interruption by the administrator based on the expected situation as based on the prior art. This thus allows the distributed antenna system 20 to be dynamically reconfigured in a timely and efficient manner based on the real-time load distribution, balancing the load and improving the system efficiency in a timely manner, while greatly improving the convenience, real-time nature and accuracy of the configuration, and without service interruption, ensuring the continuity of services.

As shown in Fig. 3, according to another embodiment of the present disclosure, in the above distributed antenna system 20, the cell management unit 24 may comprise: a radio signal processing module 31, configured to distribute downlink radio signals to the remote radio heads 26, and collect uplink radio signals and transmit them to the base station 21; a load information collection module 32, configured to collect the load information of the distributed antenna system 20; a reconfiguration module 33, configured to determine a new topology, reassign carriers among the corresponding remote radio heads, and reconfigure the routing of radio signals according to the load information collected by the load information collection module 32.

Fig. 4 and Fig. 5 are schematic diagrams showing the principle of reconfiguration of the distributed antenna system in the embodiment. Fig. 4 shows the initial configuration of the distributed antenna system 20, with RRH A and RRH B using carrier 1, RRH C and RRH D using carrier 2, and RRH E and RRH F using carrier 3. When the load of carrier 2 and carrier 3 is transferred to the area of carrier 1, that is, when the CMU 4 detects that RRHA and RRH B have become temporary hot spots of high load, the distributed antenna system 20 is reconfigured. Fig. 5 shows the reconfigured state of the distributed antenna system 20, with RRH A using carrier 1, RRH B using carrier 2, and RRH C, RRH D, RRH E, and RRH F using carrier 3. Clearly, by using the distributed antenna system provided by this embodiment, for areas where communication traffic varies greatly, such as auditoriums, conference halls, etc., it is possible to dynamically allocate radio frequency resources according to the current traffic condition, and greatly balance the traffic load and improve system efficiency.

In accordance with another embodiment of the present disclosure, two embodiments of the CMU 24 in the distributed antenna system 20 for obtaining load information and the corresponding structures and methods are provided. The CMU 24 works in a lower sublayer of the physical layer and is not involved in baseband processing, so the CMU 24 does not have direct access to load information.

As shown in Fig. 6, according to the present embodiment, the distributed antenna system 20 comprises remote radio heads (RRH) 26, an extension hub 25, and a cell management unit (CMU) 24 connected to the remote radio heads 26 via the extension hub 25. The cell management unit 24 is connected to the base station 21, and is configured to distribute downlink radio signals to the remote radio heads 26, collect uplink radio signals and transmit them to the base station 21, and collect the load information of the distributed antenna system 20 and reconfigure the distributed antenna system 20 according to the load information.

The cell management unit 24 comprises: a radio signal processing module 31, configured to distribute downlink radio signals to the remote radio heads 26, collect uplink radio signals and transmit them to the base station 21; a load information collection module 32, configured to collect the load information of the distributed antenna system 20; a reconfiguration module 33, configured to determine a new topology, reassign carriers among the corresponding remote radio heads, and reconfigure the routing of radio signals according to the load information collected by the load information collection module 32.

The remote radio heads 26 comprise a received power detection module 41 configured to detect the total broadband power received by the remote radio heads 26 and transmit the detected power value to the load information collection module 32.

The load information collection module 32 comprises a first decision module 42 configured to receive the power value transmitted by the received power detection module 41 and notify the reconfiguration module 33 to reconfigure the distributed antenna system according to the power value when the power value exceeds a threshold value.

The reconfiguration module 33 comprises: a topology reconfiguration module 44, configured to determine a corresponding new topology according to the load information collected by the load information collection module 32; a routing reconfiguration module 45, configured to update the radio signal route by reconfiguring the I/Q packet addresses and updating the routing table stored in the cell management unit 24 and extension hub 25 according to the new topology determined by the topology reconfiguration module 44; a carrier reconfiguration module 46, configured to switch the carrier of the corresponding remote radio heads 25 [sic: 26] according to the new topology determined by the topology reconfiguration module 44.

According to the above configuration, the cell management unit 24 receives the power information detected and transmitted by the RRH 26, compares it with a predetermined threshold, and then decides whether to reconfigure the intelligent distributed antenna system. This embodiment does not require any changes to the base station and allows fine-grained load information (specific to each RRH) to be obtained. However, if the CMU wants to know more detailed load information, such as the traffic load for different QoS, the number of users, etc., it must turn to the base station or the base station control center.

In addition, as shown in Fig. 6, the base station 21 may include a load information detection module 210, configured to collect load information and send the information to the cell management unit. The cell management unit 24 comprises a second decision module 43, configured to receive the load information and notify the reconfiguration module 33 to reconfigure the distributed antenna system 20 according to the load information when the load information meets the reconfiguration conditions.

The load information detection module 210 is provided in each base station 21, and it is configured to collect various load information (for example, throughput, number of connections, number of registered users, etc.) and transmit the collected load information to the CMU through the OBSAI/CPRI interface or a local management interface. This embodiment is easily implemented and provides detailed and accurate load information, but the load information is more granular (for each carrier, instead of each RRH).

Fig. 7 is a process flowchart of the method for the reconfiguration of the distributed antenna system in this embodiment. If the first method of collecting load information is used, first, in step 701, the remote radio heads 26 will detect the total broadband power received by them, and transmit the detected power value to the cell management unit 24.

Then, in step 702, the cell management unit 24 receives the power value transmitted by the remote radio heads 26 via the extension hub 25, and when the power value exceeds the threshold, determines the need to reconfigure the distributed antenna system 20 according to the power value (step 71). Otherwise, step 701 continues to be repeated.

If the second method of collecting load information is used, first in step 703, the base station 21 collects the load information and transmits it to the cell management unit 24. Then, in step 704, the cell management unit 24 receives the load information transmitted by the base station 21, and when the load information meets the reconfiguration conditions, the need to reconfigure the distributed antenna system 20 according to the load information (step 71) is determined. Otherwise, step 703 is repeated.

After step 71, the cell management unit 24 will determine the new topology based on the load information in step 72. Then in step 73, the cell management unit 24 updates the radio signal route by reconfiguring the I/Q packet addresses and updating the routing table stored in the cell management unit 24 and the extension hub 25 according to the new topology determined, and switch the carrier of the corresponding remote radio heads 26 according to the new topology determined.

It should be understood by those skilled in the art that the structure and method of the foregoing two methods for obtaining load information may be flexibly selected according to the needs of the actual application scenario, or a combination thereof may be applied, and they are all within the scope defined by the claims of the present disclosure.

According to another embodiment of the present disclosure, as shown in Fig. 8, the distributed antenna system 20 comprises remote radio heads (RRHs) 26, an extension hub 25, and a cell management unit 24 connected to the remote radio head 26 via the extension hub 25. The cell management unit 24 is connected to the base station 21, and is configured to distribute downlink radio signals to the remote radio heads 26, collect uplink radio signals and transmit them to the base station 21, and collect the load information of the distributed antenna system 20 and reconfigure the distributed antenna system 20 according to the load information.

The cell management unit 24 comprises: a radio signal processing module 31, configured to distribute downlink radio signals to the remote radio heads 26, collect uplink radio signals and transmit them to the base station 21; a load information collection module 32, configured to collect the load information of the distributed antenna system 20; a reconfiguration module 33, configured to determine a new topology, reassign carriers among the corresponding remote radio heads, and reconfigure the routing of radio signals according to the load information collected by the load information collection module 32.

The remote radio heads 26 comprise a received power detection module 41 configured to detect the total broadband power received by the remote radio heads 26 and transmit the detected power value to the load information collection module 32.

The load information collection module 32 comprises a first decision module 42 configured to receive the power value transmitted by the received power detection module 41 and notify the reconfiguration module 33 to reconfigure the distributed antenna system according to the power value when the power value exceeds a threshold value.

The reconfiguration module 33 comprises: a topology reconfiguration module 44, configured to determine the corresponding new topology according to the load information collected by the load information collection module 32; a routing reconfiguration module 45, configured to update the radio signal route by reconfiguring the I/Q packet addresses and updating the routing table stored in the cell management unit 24 and extension hub 25 according to the new topology determined by the topology reconfiguration module 44; and a carrier reconfiguration module 46, configured to switch the carrier of the corresponding remote radio heads 25 [sic: 26] according to the new topology determined by the topology reconfiguration module 44.

The base station 21 further comprises a load information detection module 210 for collecting load information and transmitting it to the cell management unit. The cell management unit 24 further comprises a second decision module 43, configured to receive the load information and notify the reconfiguration module 33 to reconfigure the distributed antenna system 20 according to the load information when the load information meets the reconfiguration conditions.

The topology reconfiguration module 44 comprises: a storage module 51, configured to store a predefined topology, wherein the predefined topology corresponds to load information or a combination of load information; and a topology searching module 52, configured to find, based on the load information or combination of load information collected by the load information collection module 32, a topology stored in the storage module 51 that corresponds to the load information or combination of load information, and determine the found topology as the corresponding new topology.

The carrier reconfiguration module 46 comprises: a power control module 53, configured to notify the base station to gradually reduce the transmit power of the carrier of the corresponding high-load remote radio heads according to the new topology determined by the topology reconfiguration module 44; a carrier switching module 54, configured to notify the high-load remote radio heads to switch carriers to carriers of corresponding low-load remote radio heads according to the new topology determined by the topology reconfiguration module 44.

This embodiment provides a manner of implementation for determining a new topology and the corresponding structure and method thereof. In most cases, temporary hot spots are predictable, such as auditoriums, halls, conference rooms, etc., in which case, the manner of implementation provided by this embodiment can be used to predefine all possible topologies, which can be stored in the CMU as alternatives.

According to this embodiment, the processing flow by which the topology reconfiguration module 44 determines the new topology according to the load information comprises: pre-storing predefined topologies, which correspond to load information or a combination of load information; searching for a pre-stored topology, based on and corresponding to the load information or the combination of load information, and determining the found topology as the corresponding new topology.

Preferably, the processing flow of the topology reconfiguration module 44 may further comprise: pre-storing an initial topology; configuring the distributed antenna system according to the initial topology when the distributed antenna system is started; and after the antenna system is reconfigured and it is monitored that the load information or the combination of the load information has returned to normal, reconfiguring the distributed antenna system based on the initial topology.

Fig. 9 is a schematic diagram of the topology reconfiguration principle of the embodiment, where the distributed antenna system 20 is configured according to the topology of the basic configuration 91 after startup. Taking two areas, Hall 1 and Hall 2 as an example, when the load in Hall 1 is high, the distributed antenna system is reconfigured according to the topology of the corresponding pre-stored temporary configuration 92, or when the load in Hall 2 is high, the distributed antenna system is reconfigured according to the topology of the corresponding pre-stored temporary configuration 93, or when the loads in both halls are high, the distributed antenna system is reconfigured according to the corresponding pre-stored temporary configuration 94. After the distributed antenna system switches from the basic configuration to the temporary configuration 92, if the load in Hall 1 becomes low, the distributed antenna system will be reconfigured again based on the original basic configuration 91, and the same shall apply in other similar cases.

This embodiment also provides a manner of implementation of carrier reconfiguration and its corresponding structure and method. When the CMU carries out carrier reconfiguration, although the base station can force mobile stations to switch carriers, it cannot notify the base station to force mobile stations to switch carriers because the CMU only knows the RRH of the carriers to be switched, but does not know which mobile stations are using the RRH and need to switch carriers. In order to avoid service interruption to mobile stations (MS) caused by the carrier switching of the RRH and ensure service continuity, the embodiment of the present disclosure provides a manner of implementation for carrier reconfiguration and the corresponding structure. By gradually reducing the transmit power of the carriers to be switched, a situation in which mobile stations leave the cell is simulated, and this makes the mobile stations actively send a request to the base station to switch carriers, thus enabling the base station to be informed of the specific mobile stations that need a switch of carriers and switch these mobile stations to the target carriers through the base station.

According to this embodiment, the processing flow of the carrier reconfiguration module 46 comprises: gradually reducing the transmit power of the carrier of the corresponding high-load remote radio heads according to the determined new topology, and then notifying the high-load remote radio heads to switch carriers to the carriers of corresponding low-load remote radio heads according to the new topology determined.

The carriers of the corresponding low-load remote radio heads may be a neighboring available carrier. If there is no neighboring available carrier, the base station switches the mobile station to a specific target carrier after a predetermined delay time, with the target carrier being a low-load target carrier to which the RRH corresponding to the mobile station should be switched according to the determined new topology. Obviously, the delay time should be greater than the time for the RRH to switch carriers in order to switch the mobile station to the target carrier after the RRH has switched to the target carrier.

An example of carrier reconfiguration in this embodiment is described in Figs. 10, 11 and 12. The base station 101 transmits carriers C1 and C2, and assigns them to RRH 104 and RRH 105. The base station 102 transmits carriers C3 and C4, and assigns them to RRH 106 and RRH 107. The mobile station (MS) 108 is in the area a1 and uses carrier C2. In this example, the CMU 103 detects that the area a1 is a hot spot according to the collected load information and that part of the RRHs from the high-load carrier C2 needs to be switched to the low-load carriers C3 and C4.

In the initial state shown in Fig. 11, the gradual reduction of the transmit power of carrier C2 causes the MS 108 to send a switch request to the base station 101, thereby notifying the base station 101 that the MS 108 is using carrier C2 in the hot spot a1. In the intermediate state shown in Fig. 12, the base station 101 switches the MS 108 to the neighboring carrier C1, and switches the RRH 105 to carrier C3. Since the CMU 103 detects that the high load situation in the area a1 is still not relieved according to the collected load information, the MS 108 continues to be switched to carrier C4 and the RRH 105 is switched to carriers C3 and C4 in the same way. Thus, in the final state shown in Fig. 13, load balancing is achieved.

Figs. 13 and 14 depict another example of an embodiment of carrier reconfiguration in the present embodiment, with the base station 131 transmitting carrier C1 and assigning it to the RRH 134 and RRH 135. The base station 132 transmits carrier C2 and assigns it to RRH 136 and RRH 137. The mobile station (MS) 138 is in the area a1 and uses carrier C1. In this example, the CMU 133 detects that the area a1 is a hot spot according to the collected load information and that part of the RRHs from the high-load carrier C1 needs to be switched to the low-load carrier C2.

In the initial state shown in Fig. 14, the gradual reduction of the transmit power of carrier C1 causes the MS 138 to send a switch request to the base station 131, thereby notifying the base station 131 that MS 138 is using carrier C1 in the hot spot a1. In the final state shown in Figure 15, the base station 131 switches MS 138 to the neighboring low-load carrier C2, and switches the RRH 135 to carrier C2, thus achieving load balancing.

According to another embodiment of the present disclosure, as shown in Fig. 15, the distributed antenna system 20 comprises remote radio heads (RRHs) 26, an extension hub 25, and a cell management unit 24 connected to the remote radio heads 26 via the extension hub 25.

The cell management unit 24 is connected to the base station 21, and is configured to distribute downlink radio signals to the remote radio heads 26, collect uplink radio signals and transmit them to the base station 21, and collect the load information of the distributed antenna system 20 and reconfigure the distributed antenna system 20 according to the load information.

The cell management unit 24 comprises: a radio signal processing module 31, configured to distribute downlink radio signals to the remote radio heads 26, collect uplink radio signals and transmit them to the base station 21; a load information collection module 32, configured to collect the load information of the distributed antenna system 20; a reconfiguration module 33, configured to determine a new topology, reassign carriers among the corresponding remote radio heads, and reconfigure the routing of radio signals according to the load information collected by the load information collection module 32.

The remote radio heads 26 comprise a received power detection module 41 configured to detect the total broadband power received by the remote radio heads 26 and transmit the detected power value to the load information collection module 32.

The load information collection module 32 comprises a first decision module 42 configured to receive the power value transmitted by the received power detection module 41 and notify the reconfiguration module 33 to reconfigure the distributed antenna system according to the power value when the power value exceeds a threshold value.

The reconfiguration module 33 comprises: a topology reconfiguration module 44, configured to determine a corresponding new topology according to the load information collected by the load information collection module 32; a route reconfiguration module 45, configured to update the radio signal route by reconfiguring the I/Q packet addresses and updating the routing table stored in the cell management unit 24 and extension hub 25 according to the new topology determined by the topology reconfiguration module 44; and a carrier reconfiguration module 46, configured to switch the carrier of the corresponding remote radio heads 25 [sic: 26] according to the new topology determined by the topology reconfiguration module 44.

The base station 21 further comprises a load information detection module 210 for collecting load information and transmitting it to the cell management unit. The cell management unit 24 further comprises a second decision module 43, configured to receive the load information and notify the reconfiguration module 33 to reconfigure the distributed antenna system 20 according to the load information when the load information meets the reconfiguration conditions.

The topology reconfiguration module 44 comprises: a first dynamic reconfiguration module 61, configured such that when the total received broadband power transmitted by the remote radio heads 26 is received, it determines the high-load remote radio heads based on the power value and the predetermined threshold value, and determines the new topology by exchanging the assigned carriers of high-load remote radio heads with those of low-load remote radio heads (for example, in Figs. 4 and 5, RRH B is switched from carrier 1 to carrier 2, and RRH C and RRH D are switched from carrier 2 to carrier 3); a second dynamic reconfiguration module 62, configured such that when the cell management unit 24 receives the load information transmitted by the base station 21, it determines the high-load areas based on the load information transmitted by the base station 21, and determines the new topology by exchanging the assigned carriers of a predetermined percentage (e.g. 50%) of remote radio heads in the high-load areas with those of a corresponding number of remote radio heads in low-load areas; a dynamic tracking configuration module 63, configured such that after the distributed antenna system 20 is reconfigured according to the new topology determined by the second dynamic reconfiguration module 62, if the high-load areas are still detected with a high load according to the received load information, it obtains a new topology by exchanging the assigned carriers of a predetermined percentage of remote radio heads in high-load areas that have yet to be switched with those of a corresponding number of remote radio heads in low-load areas, and repeats the steps for determining a new topology until the high-load areas are no longer detected with a high load according to the received load information.

The carrier reconfiguration module 46 comprises: a power control module 53, configured to notify the base station to gradually reduce the transmit power of the carrier of the corresponding high-load remote radio heads according to the new topology determined by the topology reconfiguration module 44; a carrier switching module 54, configured to notify the high-load remote radio heads to switch carriers to carriers of corresponding low-load remote radio heads according to the new topology determined by the topology reconfiguration module 44.

This embodiment provides another manner of implementation for determining a new topology and its corresponding structure and method. In the case of indeterminate hot spots, such as a moving crowd in an airport or a moving train in a tunnel, the implementation provided by this embodiment may be appropriately employed for dynamically constructing a topology according to the load situation, and spectrum resources may be appropriately assigned to mobile hot spots through the continuous dynamic reassignment of carriers in remote radio heads.

According to this embodiment, predetermined topologies do not need to be pre-stored in the CMU 24. The distributed antenna system 20 is configured according to the topology of the basic configuration after startup. When CMU 24 receives the load information, it determines if there is a high-load area based on the load information and constructs a new topology to transfer low-load carriers to the high-load area.

If the load information received by the CMU 24 is a power report from the RRH 26, then the CMU 24 is notified of high-load RRHs, and a new topology assigning low-load carriers to the high-load RRHs can be constructed directly via the first dynamic reconfiguration module 61 to achieve load balance.

According to this embodiment, the processing flow of the first dynamic reconfiguration module 61 comprises: determining the high-load remote radio heads based on the load information transmitted by the remote radio heads, and exchanging the assigned carriers of high-load remote radio heads with those of low-load remote radio heads to determine a new topology.

If the load information received by the CMU is the load information from the base station 21, then the CMU 24 is only notified of the high-load areas and does not know of the specific high-load RRHs, and it will need to construct a new topology via the second dynamic reconfiguration module 62 and/or the dynamic tracking configuration module 63.

According to this embodiment, the processing flow of the second dynamic reconfiguration module 62 comprises: determining the high-load areas based on the load information transmitted by the base station, and exchanging the assigned carriers of a predetermined percentage of remote radio heads in the high-load areas with those of a corresponding number of remote radio heads in low-load areas to determine a new topology. Preferably, according to this embodiment, the processing flow of the dynamic tracking configuration module 63 comprises: after the distributed antenna system is reconfigured according to the new topology determined, if the high-load areas are still detected with a high load according to the received load information, the assigned carriers of a predetermined percentage of remote radio heads in high-load areas that have yet to be switched are exchanged with those of a corresponding number of remote radio heads in low-load areas to obtain a new topology, and the steps for determining a new topology are repeated until the high-load areas are no longer detected with a high load according to the received load information.

Preferably, the predetermined ratio may be 50%, that is, a dichotomous distribution method is adopted, and the assigned carriers of 50% of the remote radio heads in the high-load areas are exchanged with those of a corresponding number of remote radio heads in low-load areas to obtain a topology that is determined as the new topology. After the distributed antenna system is reconfigured according to the new topology determined by the second dynamic reconfiguration module, if the high-load areas are still detected with a high load according to the received load information, the assigned carriers of 50% of remote radio heads in high-load areas that have yet to be switched are exchanged with those of a corresponding number of remote radio heads in low-load areas to obtain a topology that is determined as the new topology. The steps for determining a new topology are repeated until the high-load areas are no longer detected with a high load according to the received load information. Clearly, the new determined topology based on this embodiment is dynamically constructed and is not unique.

Fig. 16 is a process flowchart of the reconfiguration of the distributed antenna system in this embodiment. If the first method of collecting load information is used, first, in step 701, the remote radio heads 26 will detect the total broadband power received by them, and transmit the detected power value to the cell management unit 24.

Then, in step 702, the cell management unit 24 receives the power information transmitted by the remote radio heads 26, and when the power information exceeds the threshold value, determines the need to reconfigure the distributed antenna system 20 according to the power value (step 71). Otherwise, step 701 is repeated.

If the second method of collecting load information is used, first in step 703, the base station 21 collects the load information and transmits it to the cell management unit 24.

Then, in step 704, the cell management unit 24 receives the load information transmitted by the base station 21, and when the load information meets the reconfiguration conditions, the need to reconfigure the distributed antenna system 20 according to the load information (step 71) is determined. Otherwise, Step 703 is repeated.

After step 71, when the total broadband power transmitted by the remote radio heads 26 is received, in step 721, the cell management unit 24 determines the high-load remote radio heads based on the load information transmitted by the remote radio heads, and exchanges the assigned carriers of high-load remote radio heads with those of low-load remote radio heads to determine the new topology.

When the load information transmitted by the base station 21 is received, in step 722, the high-load areas are determined according to the load information transmitted by the base station, and the assigned carriers of a predetermined percentage of remote radio heads in the high-load areas are exchanged with a corresponding number of those in low-load areas to determine the new topology. Following this, in step 730, the cell management unit 24 updates the radio signal route by reconfiguring the I/Q packet addresses and updating the routing table stored in the cell management unit 24 and extension hub 25 according to the new topology determined; and it also gradually reduces the transmit power of the carrier of the corresponding high-load remote radio heads according to the new topology determined, and notifies the high-load remote radio heads to switch carriers to the carriers of corresponding low-load remote radio heads according to the new topology determined.

Figs. 17 and 18 are schematic diagrams of the working principles of the second dynamic reconfiguration module 62 and the dynamic reconfiguration module 63 described in this embodiment.

As shown in Fig. 17, in the initial topology of the distributed antenna system, the carrier m in the temporary hot spot determined according to the load information has a high load. In the intermediate topology state, after switching the carriers of half of the RRHs in the temporary hot spot to carrier n, the carrier m is still found to have a high load according to the load information. Therefore, half of the remaining RRHs with unswitched carriers in the temporary hot spot continue to be switched to carrier n, and load balance is achieved in this final topology state.

As shown in Fig. 18, in the initial topology of the distributed antenna system, the carrier m in the temporary hot spot determined according to the load information has a high load. In the intermediate topology state, after switching the carriers of half of the RRHs in the temporary hot spot to carrier n, the carrier n is found to become heavily load according to the load information. Therefore, half of the remaining RRHs with unswitched carriers in the temporary hot spot continue to be switched to carrier n, and load balance is achieved in this final topology state.

Fig. 19 is a diagram of the processing flow of the second dynamic reconfiguration module 62 and the dynamic reconfiguration module 63 in this embodiment.

In step 191, the CMU 24 receives the load information transmitted by the base station 21.

In step 192, the CMU 24 determines whether there is any high-load carrier based on the load information; if there is none, it continues to monitor the load information, and if there is, step 193 is executed, i.e., the RRHs in the high-load carrier area are divided into two groups.

Then, in step 194, one group of RRHs is switched to a low-load carrier.

In step 195, after the distributed antenna system is reconfigured, if the initially heavily loaded carrier is still heavily loaded, step 196 and step 197 will be executed, i.e., the remaining RRHs with unswitched carriers will be divided into two groups in step 196, and one group of RRHs will be switched to a low-load carrier in step 197.

If an initially high-load carrier becomes low-load and an initially low-load carrier becomes high-load (step 198), steps 199 and 200 will be executed, i.e., the RRHs in the new high-loaded carrier area will be divided into two groups in step 199, and one group of RRHs will be switched back to the initially high-load carrier in step 200.

By using the distributed antenna system reconfiguration method and the corresponding distributed antenna system and cell management unit provided by the embodiments of the present disclosure, the distributed antenna system can be dynamically reconfigured in a timely and effective manner according to the real-time load distribution, balancing the load and improving the system efficiency in a timely manner; and there is no need for service interruption, with service continuity ensured. Therefore, the embodiments are capable of improving the performance of distributed antenna systems, such as by realizing high spectral efficiency, and they are suitable for complex applications and are easy to use and maintain. In addition, they are capable of providing users with as much bandwidth as possible at anywhere and at any time.

The above embodiments are only intended to illustrate the technical solutions of the present disclosure, and are not to be construed as limiting. Although the present disclosure has been particularly described with reference to preferred embodiments thereof, it should be apparent to those of ordinary skill in the art that modifications and equivalent substitutions may be made to the technical solutions of the present disclosure, without departing from the spirit and scope of the present disclosure. In the claims, the terms “comprising” and the like do not exclude elements or steps other than those listed in any claim or the overall specification. The present disclosure may be implemented by hardware comprising several separate elements, or by a suitable programmed computer. In the claims enumerating several methods, several of these methods can be implemented by one and the same hardware. Certain solutions stated in mutually distinct dependent claims are not indicative that combinations of these solutions cannot be used for optimization.

Claims

1. A distributed antenna system comprising remote radio heads and a cell management unit connected to the remote radio heads via an extension hub, wherein the cell management unit is connected to a base station for transmitting downlink radio signals to the remote radio heads, collecting uplink radio signals and transmitting them to the base station, and collecting the load information of the distributed antenna system and reconfiguring the distributed antenna system based on the load information.

2. The distributed antenna system according to Claim 1, wherein the cell management unit comprises:

a radio signal processing module, configured to distribute downlink radio signals to the remote radio heads, and collect uplink radio signals and transmit them to the base station;

a load information collection module, configured to collect the load information of the distributed antenna system;

and a reconfiguration module, configured to determine a new topology, reassign carriers among the corresponding remote radio heads, and reconfigure the routing of radio signals according to the load information collected by the load information collection module.

3. The distributed antenna system according to Claim 2, wherein the remote radio heads a received power detection module for detecting the total broadband power received by the remote radio heads and transmitting the detected power value to the load information collection module;

and the load information collection module comprises a first decision module, configured to receive the power value transmitted by the received power detection module and notify the reconfiguration module to reconfigure the distributed antenna system according to the power value when the power value exceeds a threshold value.

4. The distributed antenna system according to Claim 2, wherein the base station comprises a load information detection module, configured to collect load information and transmit it to the cell management unit;

and the cell management unit comprises a second decision module, configured to receive the load information, and notify the reconfiguration module to reconfigure the distributed antenna system according to the load information when the load information meets the reconfiguration conditions.

5. The distributed antenna system according to any one of Claims 2 – 4, wherein the reconfiguration module comprises:

a topology reconfiguration module, configured to determine a corresponding new topology according to the load information collected by the load information collection module;

a routing reconfiguration module, configured to update the radio signal route by reconfiguring the I/Q packet addresses and updating the routing table stored in the cell management unit and extension hub according to the new topology determined by the topology reconfiguration module;

and a carrier reconfiguration module, configured to switch the carrier of the corresponding remote radio heads according to the new topology determined by the topology reconfiguration module.

6. The distributed antenna system according to Claim 5, wherein the topology reconfiguration module comprises:

a storage module, configured to store a predefined topology, wherein the predefined topology corresponds to load information or a combination of load information;

and a topology searching module, configured to find, based on the load information or combination of load information collected by the load information collection module, a topology stored in the storage module that corresponds to the load information or combination of load information, and determine the topology found as the corresponding new topology.

7. The distributed antenna system according to Claim 5, wherein the topology reconfiguration module comprises: a first dynamic reconfiguration module, configured to determine high-load remote radio heads according to the load information transmitted by the remote radio heads, and determine a new topology by exchanging the assigned carriers of high-load remote radio heads with those of low-load remote radio heads.

8. The distributed antenna system according to Claim 5, wherein the topology reconfiguration module comprises:

a second dynamic reconfiguration module, configured to determine high-load areas according to the load information transmitted by the base station, and determine a new topology by exchanging the assigned carriers of a predetermined percentage of remote radio heads in the high-load areas with those of a corresponding number of remote radio heads in low-load areas;

a dynamic tracking module, configured such that after the distributed antenna system is reconfigured according to the new topology determined by the second dynamic reconfiguration module, if the high-load areas are still detected with a high load according to the received load information, it obtains a new topology by exchanging the assigned carriers of a predetermined percentage of remote radio heads in high-load areas that have yet to be switched with those of a corresponding number of remote radio heads in low-load areas, and repeats the steps for determining a new topology until the high-load areas are no longer detected with a high load according to the received load information.

9. The distributed antenna system according to Claim 5, wherein the carrier reconfiguration module comprises:

a power control module, configured to notify the base station to gradually reduce the transmit power of the carrier of the corresponding high-load remote radio heads according to the new topology determined by the topology reconfiguration module;

a carrier switching module, configured to notify the high-load remote radio heads to switch carriers to carriers of corresponding low-load remote radio heads according to the new topology determined by the topology reconfiguration module.

10. A cell management unit, which is connected to a base station and connected to remote radio heads via an extension hub, configured to distribute downlink radio signals to the remote radio heads, collect uplink radio signals and transmit them to the base station, and collect the load information of the distributed antenna system and reconfigure the distributed antenna system according to the load information.

11. The cell management unit according to Claim 10, comprising:

a radio signal processing module, configured to distribute downlink radio signals to the remote radio heads, and collect uplink radio signals and transmit them to the base station;

a load information collection module, configured to collect the load information of the distributed antenna system;

and a reconfiguration module, configured to determine a new topology, reassign carriers among the corresponding remote radio heads, and reconfigure the routing of radio signals according to the load information collected by the load information collection module.

12. The cell management unit according to Claim 11, comprising a first decision module configured to receive the power value of the total received broadband power detected and transmitted by the remote radio heads, and notify the reconfiguration module to reconfigure the distributed antenna system according to the power value when the power value exceeds a threshold value.

13. The cell management unit according to Claim 11, comprising a second decision module configured to receive the load information collected and transmitted by the base station, and notify the reconfiguration module to reconfigure the distributed antenna system according to the load information when the load information meets the reconfiguration conditions.

14. The cell management unit according to any one of Claims 11 – 13, wherein the reconfiguration module comprises:

a topology reconfiguration module, configured to determine a corresponding new topology according to the load information collected by the load information collection module;

a routing reconfiguration module, configured to update the radio signal route by reconfiguring the I/Q packet addresses and updating the routing table stored in the cell management unit and extension hub according to the new topology determined by the topology reconfiguration module;

and a carrier reconfiguration module, configured to switch the carrier of the corresponding remote radio heads according to the new topology determined by the topology reconfiguration module.

15. The cell management unit according to Claim 14, wherein the topology reconfiguration module comprises:

a storage module, configured to store a predefined topology, wherein the predefined topology corresponds to load information or a combination of load information;

and a topology searching module, configured to find, based on the load information or combination of load information collected by the load information collection module, a topology stored in the storage module that corresponds to the load information or combination of load information, and determine the topology found as the corresponding new topology.

16. The cell management unit according to Claim 14, wherein the topology reconfiguration module comprises: a first dynamic reconfiguration module, configured to determine high-load remote radio heads according to the load information transmitted by the remote radio heads, and determine a new topology by exchanging the assigned carriers of high-load remote radio heads with those of low-load remote radio heads.

17. The cell management unit according to Claim 14, wherein the topology reconfiguration module comprises:

a second dynamic reconfiguration module, configured to determine high-load areas according to the load information transmitted by the base station, and determine a new topology by exchanging the assigned carriers of a predetermined percentage of remote radio heads in the high-load areas with those of a corresponding number of remote radio heads in low-load areas;

a dynamic tracking configuration module, configured such that after the distributed antenna system is reconfigured according to the new topology determined by the second dynamic reconfiguration module, if the high-load areas are still detected with a high load according to the received load information, it obtains a new topology by exchanging the assigned carriers of a predetermined percentage of remote radio heads in high-load areas that have yet to be switched with those of a corresponding number of remote radio heads in low-load areas, and repeats the steps for determining a new topology until the high-load areas are no longer detected with a high load according to the received load information.

18. The cell management unit according to Claim 14, wherein the carrier reconfiguration module comprises:

a power control module, configured to notify the base station to gradually reduce the transmit power of the carrier of the corresponding high-load remote radio heads according to the new topology determined by the topology reconfiguration module;

a carrier switching module, configured to notify the high-load remote radio heads to switch carriers to carriers of corresponding low-load remote radio heads according to the new topology determined by the topology reconfiguration module.

19. A method for reconfiguring a distributed antenna system, comprising:

the collection of the load information of the distributed antenna system;

and the reconfiguration of the distributed antenna system according to the load information.

20. The reconfiguration method according to Claim 19, wherein the collected load information of the distributed antenna system comprises:

the remote radio heads detecting the total broadband power received by the remote radio heads and transmitting the detected power value to the load cell management unit;

and the cell management unit receiving the power value transmitted by the remote radio heads and determining the need to reconfigure the distributed antenna system according to the power value when the power value exceeds a threshold value.

21. The reconfiguration method according to Claim 19, wherein the collected load information of the distributed antenna system comprises:

the base station collecting the load information and transmitting it to the cell management unit;

and the cell management unit receiving the load information transmitted by the base station and determining the need to reconfigure the distributed antenna system according to the load information when the load information meets the reconfiguration conditions.

22. The reconfiguration method according to Claim 20 or Claim 21, wherein the reconfiguration of the distributed antenna system according to the load information comprises:

the cell management unit determining a new topology according to the load information;

updating the radio signal route by reconfiguring the I/Q packet addresses and updating the routing table stored in the cell management unit and extension hub according to the new topology determined;

and switching the carriers of the remote radio heads according to the new topology determined.

23. The reconfiguration method according to Claim 22, wherein the determination of a new topology according to the load information comprises:

pre-storing predefined topologies, wherein the predefined topologies correspond to load information or a combination of load information;

searching for a pre-stored topology, based on and corresponding to the load information or the combination of load information, and determining the found topology as the corresponding new topology.

24. The reconfiguration method according to Claim 22, further comprising:

pre-storing an initial topology;

configuring the distributed antenna system according to the initial topology when the distributed antenna system is started;

after the antenna system is reconfigured and it is monitored that the load information or the combination of the load information has returned to normal, reconfiguring the distributed antenna system based on the initial topology.

25. The reconfiguration method according to Claim 22, wherein the determination of a new topology according to the load information comprises: determining the high-load remote radio heads based on the load information transmitted by the remote radio heads, and exchanging the assigned carriers of high-load remote radio heads with those of low-load remote radio heads to determine a new topology.

26. The reconfiguration method according to Claim 22, wherein the determination of a new topology according to the load information comprises: determining high-load areas according to the load information transmitted by the base station, and determining a new topology by exchanging the assigned carriers of a predetermined percentage of remote radio heads in the high-load areas with those of a corresponding number of remote radio heads in low-load areas.

27. The reconfiguration method according to Claim 26, wherein the determination of a new topology according to the load information comprises: after the distributed antenna system is reconfigured according to the new topology determined, if the high-load areas are still detected with a high load according to the received load information, the assigned carriers of a predetermined percentage of remote radio heads in high-load areas that have yet to be switched are exchanged with those of a corresponding number of remote radio heads in low-load areas to obtain a new topology, and the steps for determining a new topology are repeated until the high-load areas are no longer detected with a high load according to the received load information.

28. The reconfiguration method according to Claim 22, wherein the switching of carriers of corresponding remote radio heads according to the new topology determined comprises:

gradually reducing the transmit power of the carrier of the corresponding high-load remote radio heads according to the new topology determined;

and notifying the high-load remote radio heads to switch carriers to the carriers of corresponding low-load remote radio heads according to the new topology determined.

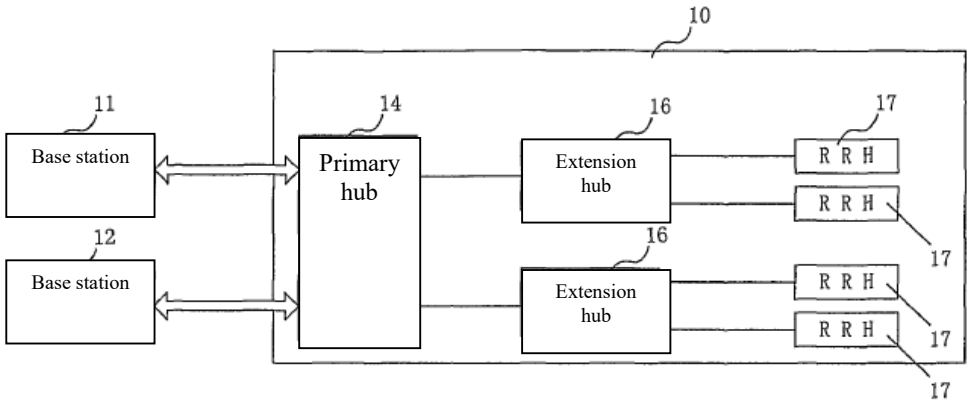
10
11
Base station
12
Base station
14
Primary hub
16
Extension hub
16
Extension hub
17
R R H
R R H
R R H
R R H
17
17
17

Fig. 1

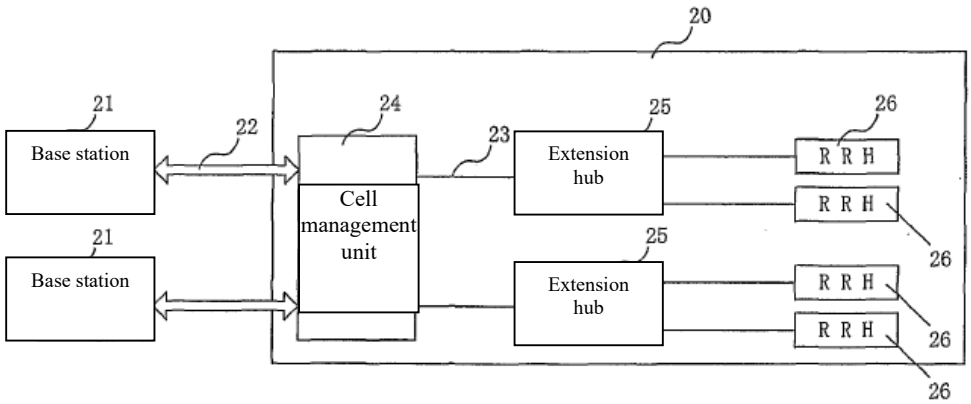
20
21
Base station
21
Base station
22
24
Cell management unit
23
25
Extension hub
25
Extension hub
26
R R H
R R H
R R H
R R H
26
26
26

Fig. 2

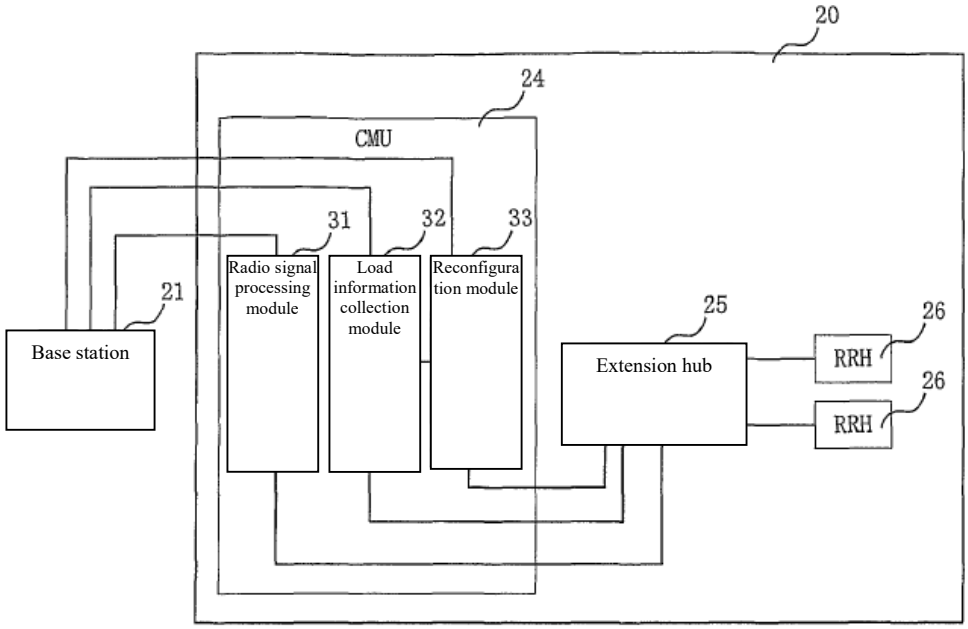
20
24
CMU
31
32
33
Radio signal processing module
Load information collection module
Reconfigura tion module
21
Base station
25
Extension hub
26
RRH
26
RRH

Fig. 3

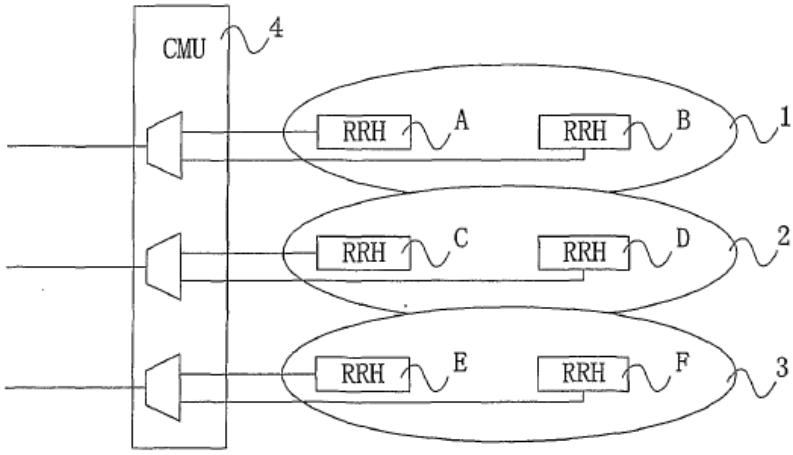
CMU
4
RRH
A
RRH
B
1
RRH
C
RRH
D
2
RRH
E
RRH
F
3

Fig. 4

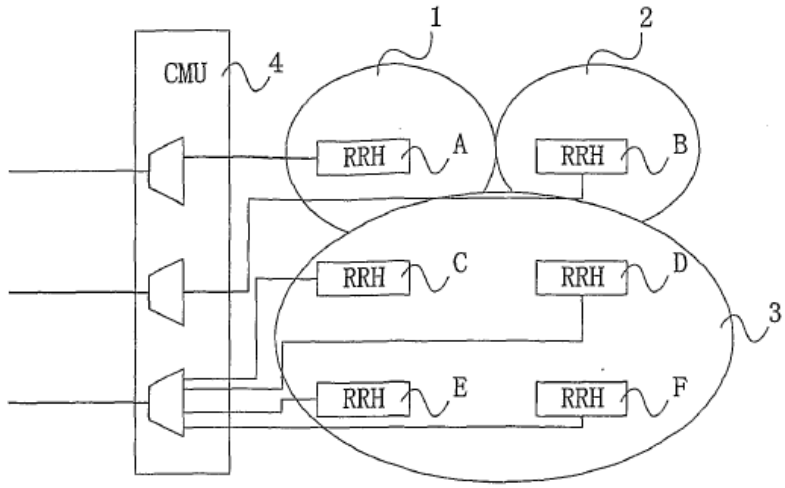
CMU
4
1
2
RRH
A
RRH
B
RRH
C
RRH
D
3
RRH
E
RRH
F

Fig. 5

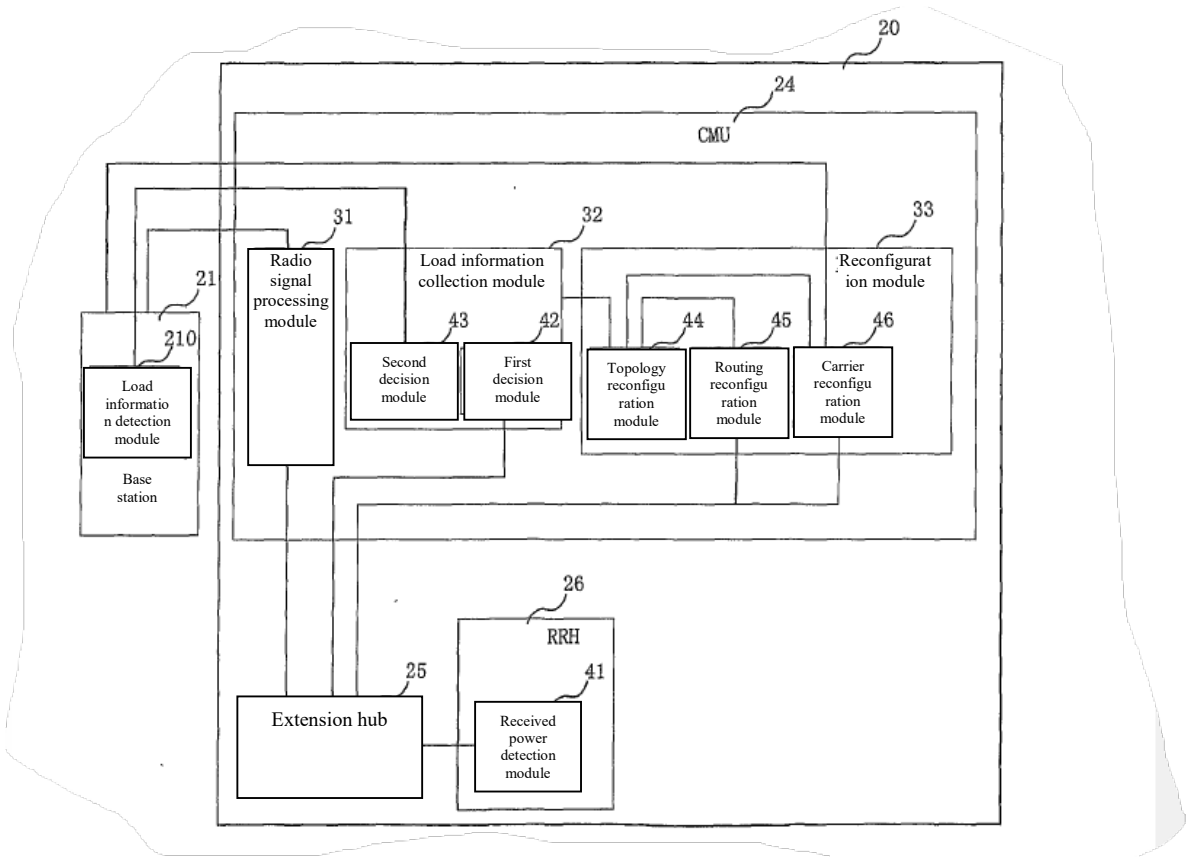
20
24
CMU
31
Radio signal processing module
32
Load information collection module
33
Reconfiguration module
21
210
Load information detection module
Base station
43
Second decision module
42
First decision module
44
Topology reconfiguration module
45
Routing reconfiguration module
46
Carrier reconfiguration module
26
RRH
25
Extension hub
41
Received power detection module

Fig. 6

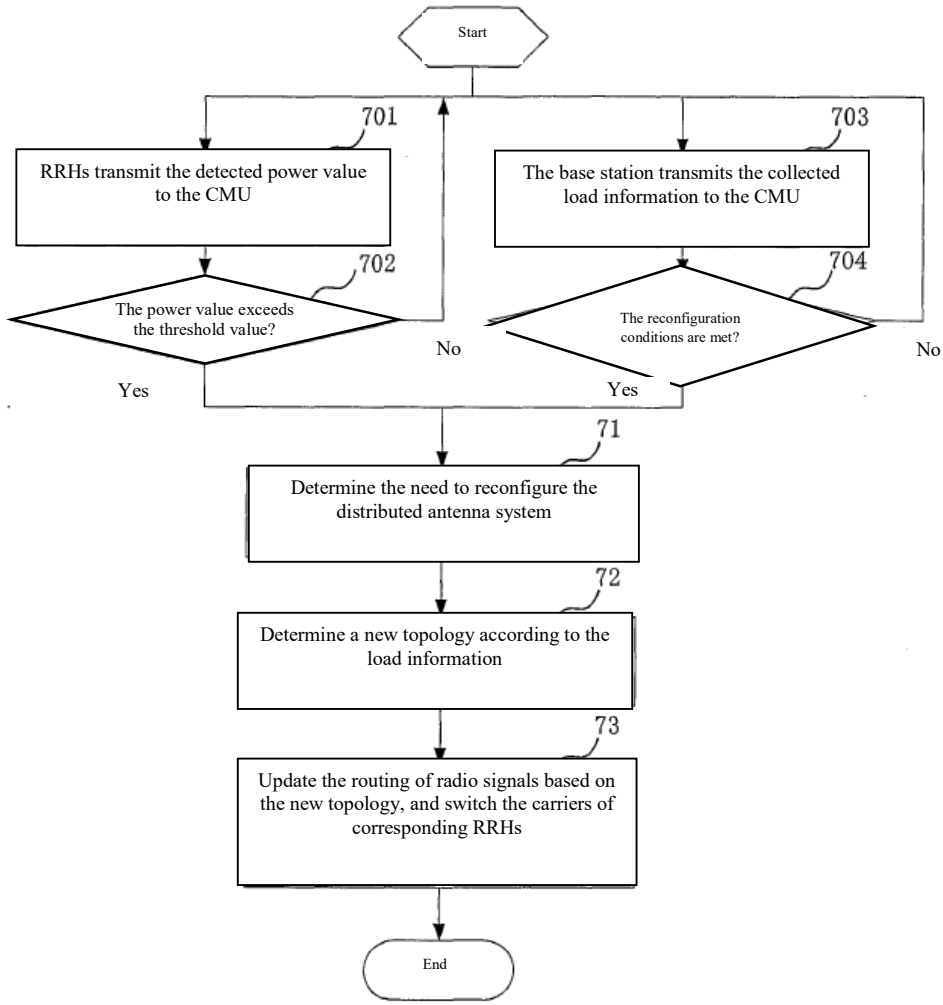
Start
701
RRHs transmit the detected power value to the CMU
703
The base station transmits the collected load information to the CMU
702
The power value exceeds the threshold value?
704
The reconfiguration conditions are met?
No
No
Yes
Yes
71
Determine the need to reconfigure the distributed antenna system
72
Determine a new topology according to the load information
73
Update the routing of radio signals based on the new topology, and switch the carriers of corresponding RRHs
End

Fig. 7

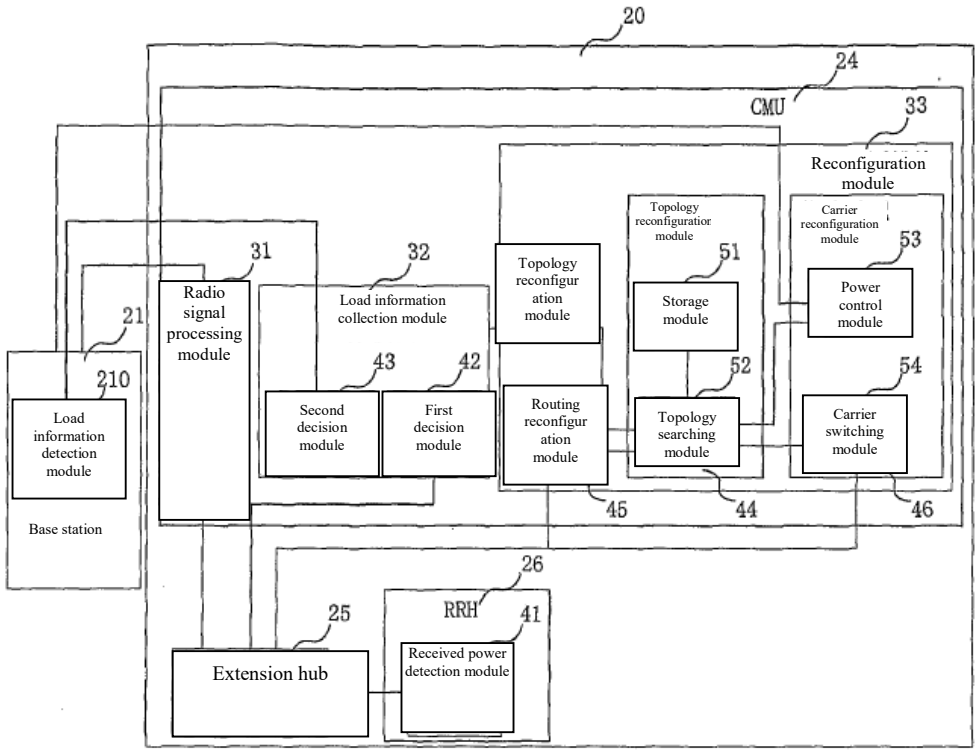
20
24
CMU
33
Reconfiguration module
Topology reconfiguration module
Carrier reconfiguration module
31
32
Radio signal processing module
Load information collection module
Topology reconfiguration module
51
53
Storage module
Power control module
21
210
43
42
52
54
Load information detection module
Second decision module
First decision module
Routing reconfiguration module
Topology searching module
Carrier switching module
Base station
45
44
46
26
RRH
41
25
Extension hub
Received power detection module

Fig. 8

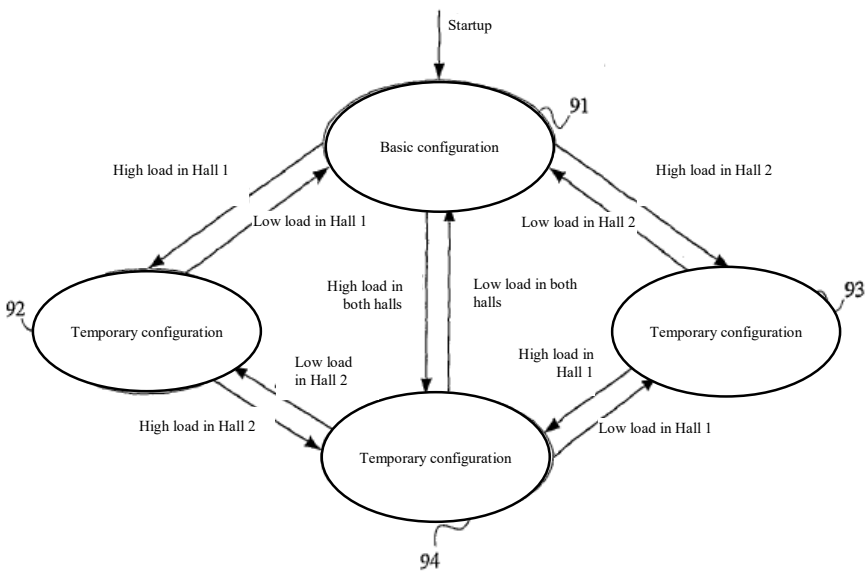
Startup
91
Basic configuration
High load in Hall 1
High load in Hall 2
Low load in Hall 1
Low load in Hall 2
High load in both halls
Low load in both halls
92
Temporary configuration
93
Temporary configuration
Low load in Hall 2
High load in Hall 1
High load in Hall 2
Low load in Hall 1
Temporary configuration
94

Fig. 9

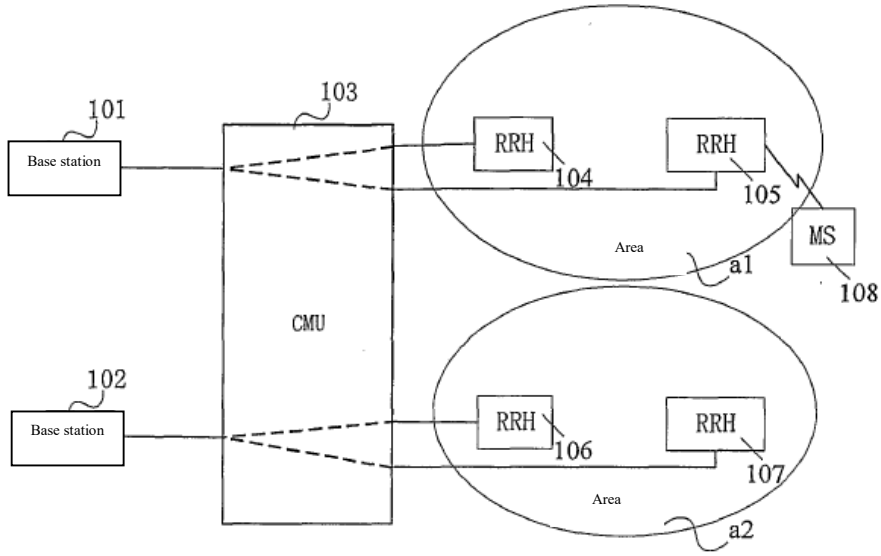
101
Base station
103
CMU
102
Base station
RRH
104
RRH
105
MS
108
Area
a1
RRH
106
RRH
107
Area
a2

Fig. 10

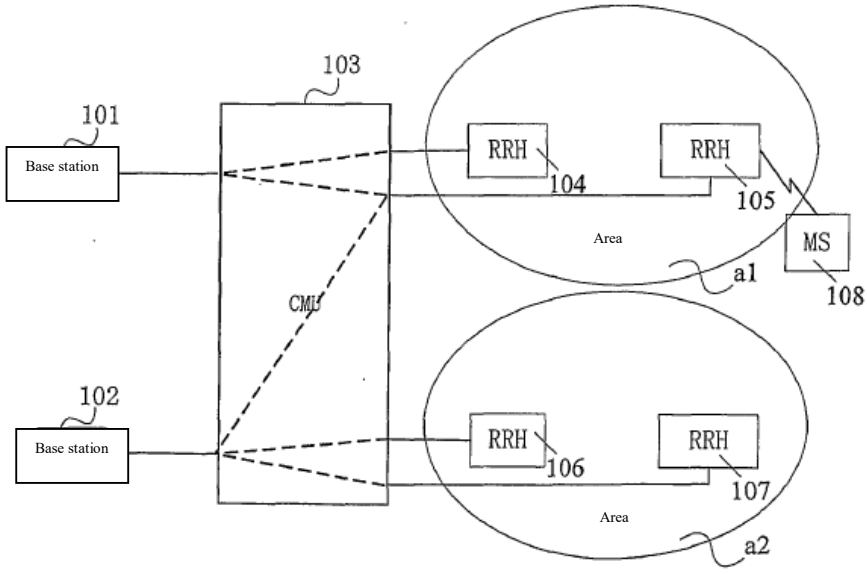
103
101
Base station
CMU
102
Base station
RRH
104
RRH
105
MS
108
Area
a1
RRH
106
RRH
107
Area
a2

Fig. 11

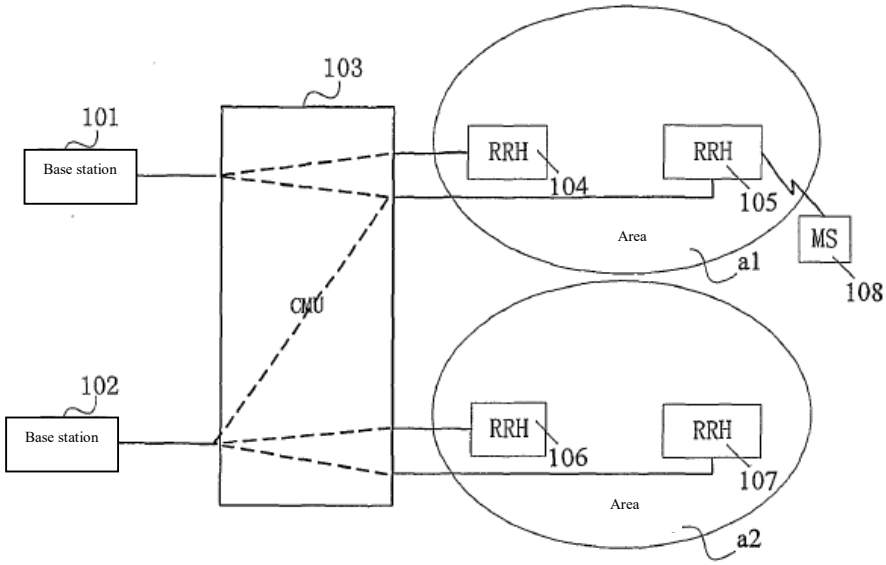
103
101
Base station
RRH
104
RRH
105
Area
a1
MS
108
CMU
102
Base station
RRH
106
RRH
107
Area
a2

Fig. 12

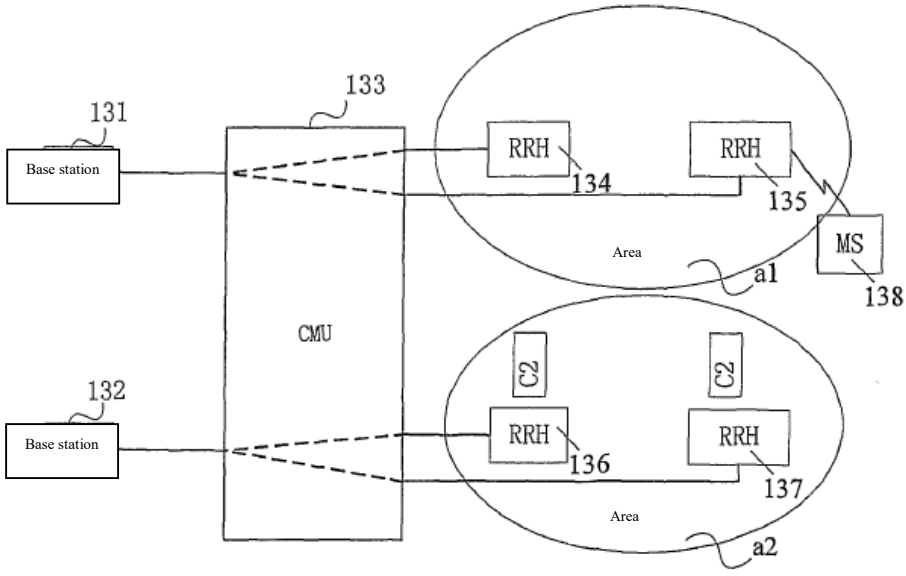
133
131
Base station
RRH
134
RRH
135
Area
a1
MS
138
CMU
C2
C2
132
Base station
RRH
136
RRH
137
Area
a2

Fig. 13

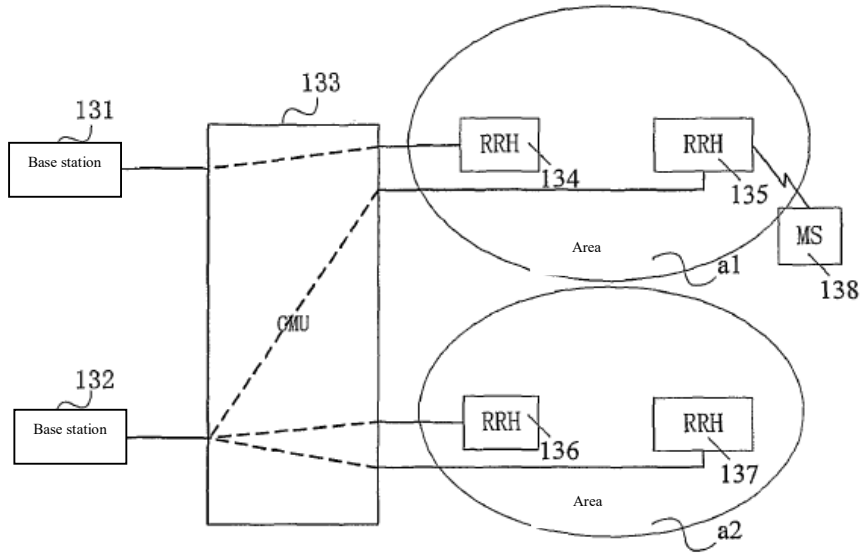
133
131
Base station
RRH
134
RRH
135
MS
138
Area
a1
CMU
132
Base station
RRH
136
RRH
137
Area
a2

Fig. 14

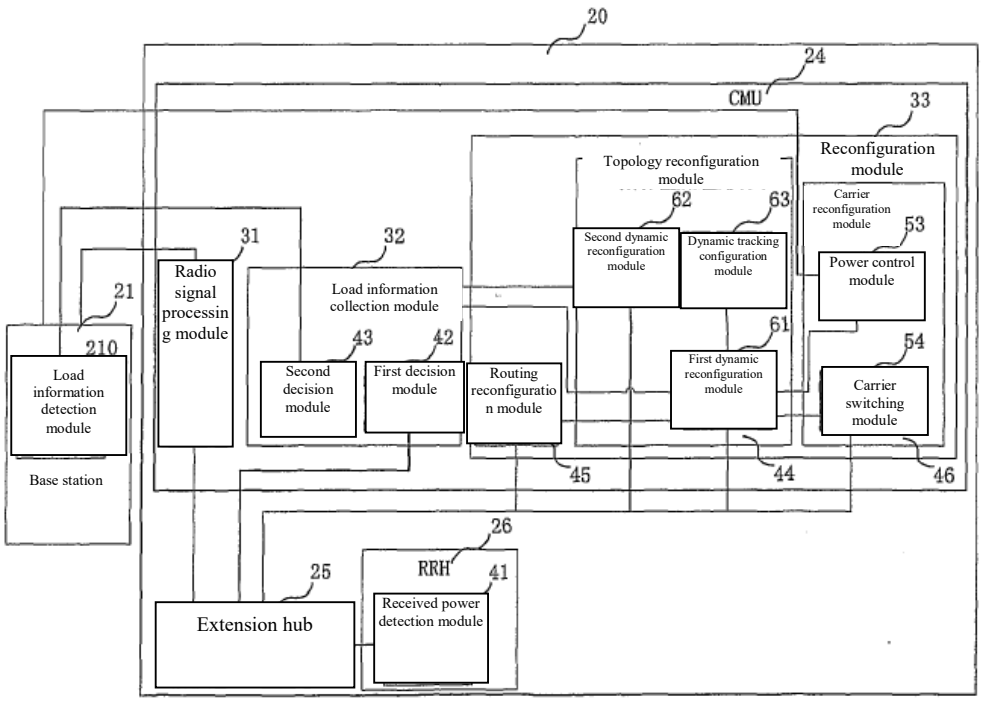
20
24
CMU
33
Reconfiguration module
Topology reconfiguration module
62
63
Carrier reconfiguration module
53
Second dynamic reconfiguration module
Dynamic tracking configuration module
Power control module
31
32
Radio signal processing module
Load information collection module
21
210
Load information detection module
Base station
43
42
Second decision module
First decision module
Routing reconfiguration module
61
First dynamic reconfiguration module
54
Carrier switching module
45
44
46
26
RRH
41
25
Extension hub
Received power detection module

Fig. 15

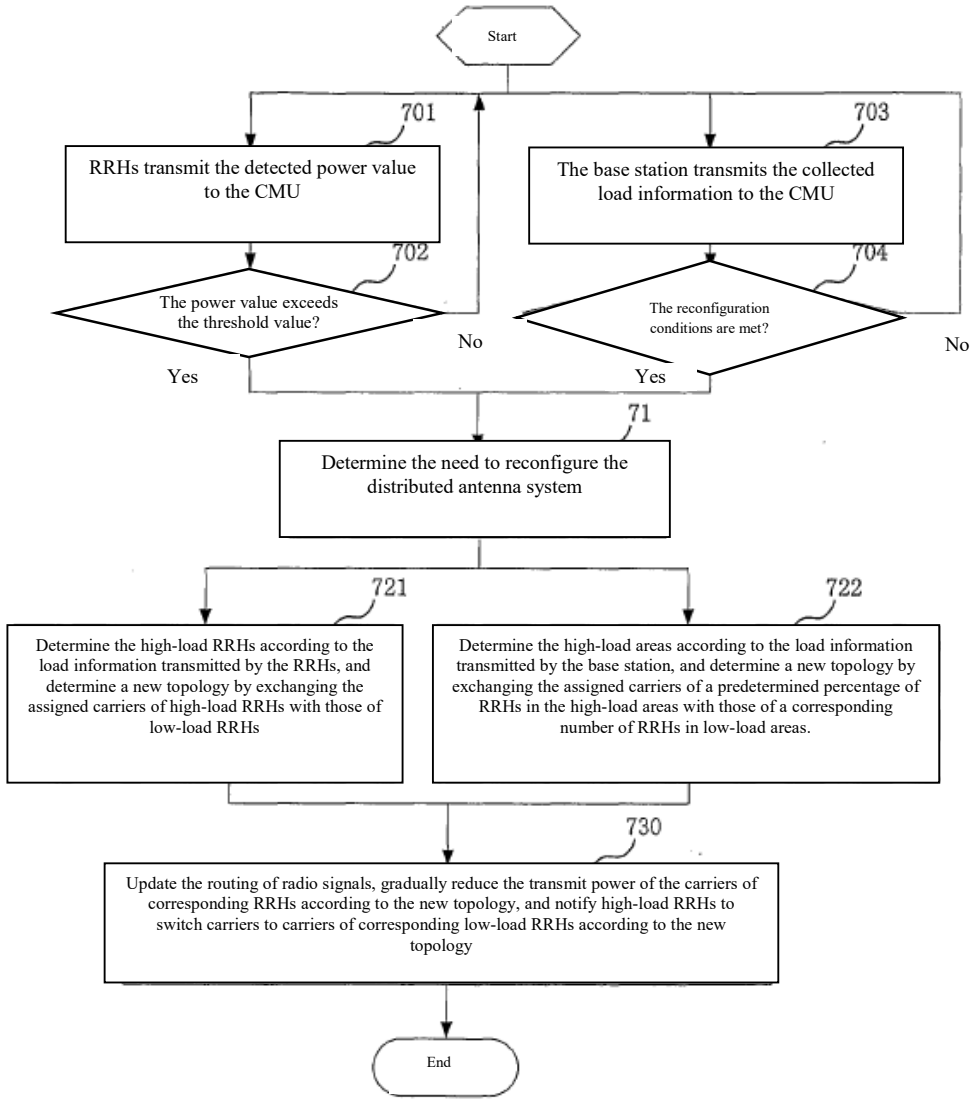
Start
701
RRHs transmit the detected power value to the CMU
703
The base station transmits the collected load information to the CMU
702
The power value exceeds the threshold value?
704
The reconfiguration conditions are met?
No
No
Yes
Yes
71
Determine the need to reconfigure the distributed antenna system
721
Determine the high-load RRHs according to the load information transmitted by the RRHs, and determine a new topology by exchanging the assigned carriers of high-load RRHs with those of low-load RRHs
722
Determine the high-load areas according to the load information transmitted by the base station, and determine a new topology by exchanging the assigned carriers of a predetermined percentage of RRHs in the high-load areas with those of a corresponding number of RRHs in low-load areas.
730
Update the routing of radio signals, gradually reduce the transmit power of the carriers of corresponding RRHs according to the new topology, and notify high-load RRHs to switch carriers to carriers of corresponding low-load RRHs according to the new topology
End

Fig. 16

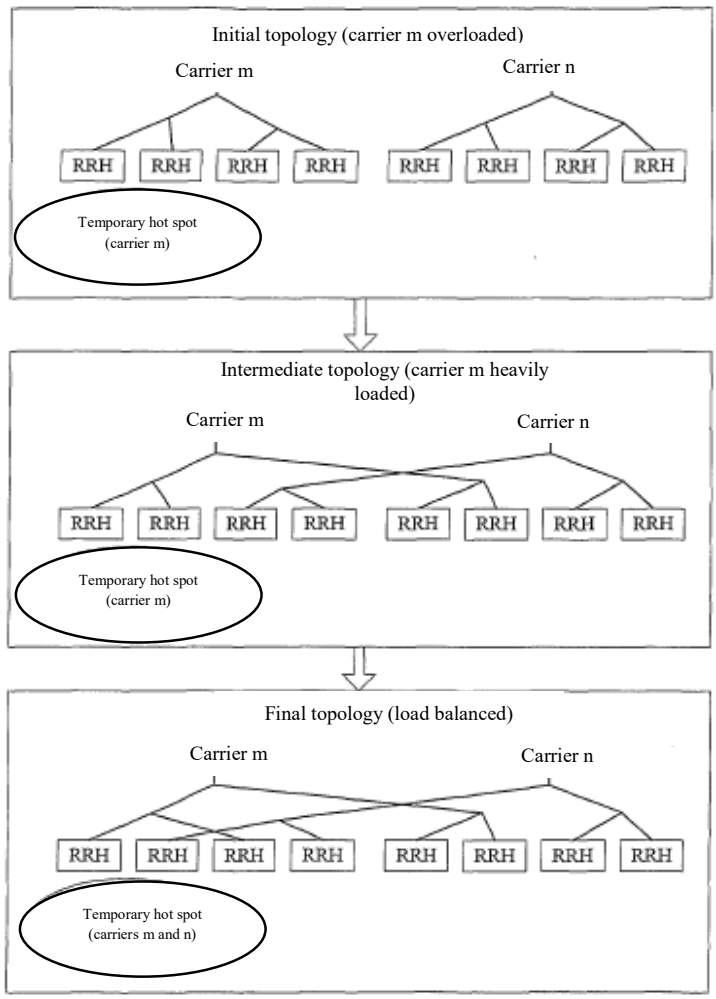
Initial topology (carrier m overloaded)
Carrier m
Carrier n
RRH
Temporary hot spot
(carrier m)
Intermediate topology (carrier m heavily loaded)
Carrier m
Carrier n
RRH
Temporary hot spot
(carrier m)
Final topology (load balanced)
Carrier m
Carrier n
RRH
Temporary hot spot
(carriers m and n)

Fig. 17

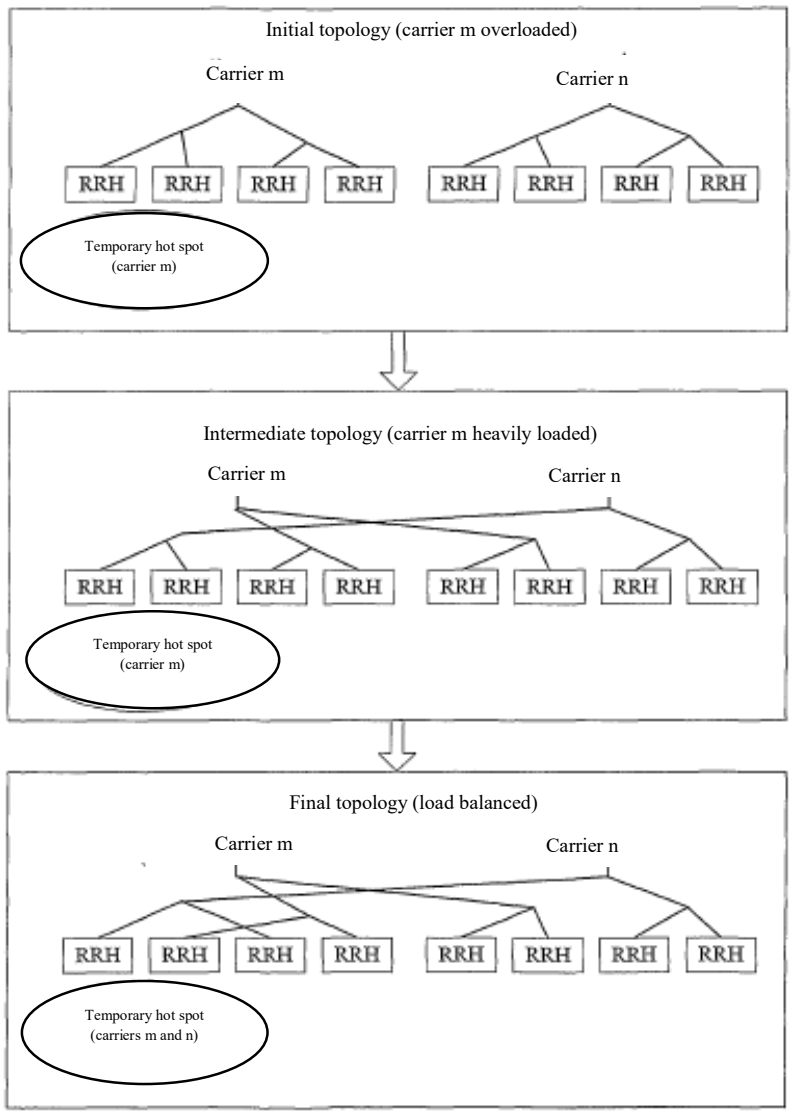
Initial topology (carrier m overloaded)
Carrier m
Carrier n
RRH
Temporary hot spot
(carrier m)
Intermediate topology (carrier m heavily loaded)
Carrier m
Carrier n
RRH
Temporary hot spot
(carrier m)
Final topology (load balanced)
Carrier m
Carrier n
RRH
Temporary hot spot
(carriers m and n)

Fig. 18

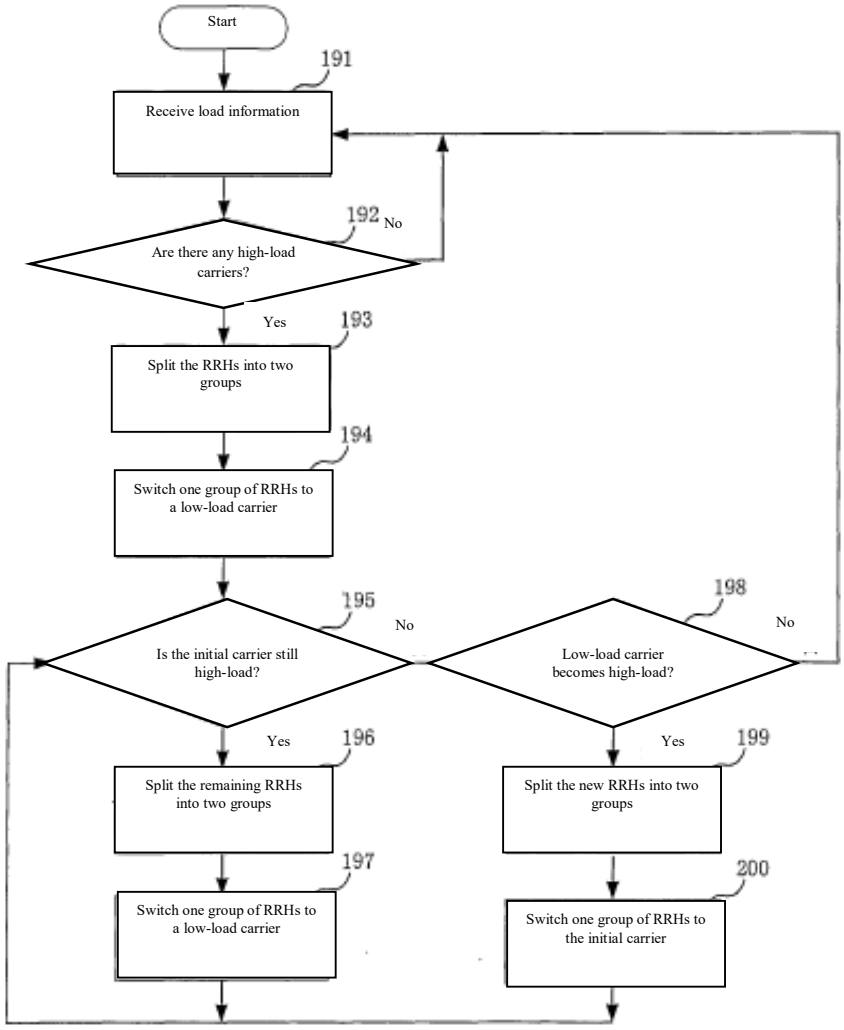
Start
191
Receive load information
192
No
Are there any high-load carriers?
Yes
193
Split the RRHs into two groups
194
Switch one group of RRHs to a low-load carrier
195
No
Is the initial carrier still high-load?
198
No
Low-load carrier becomes high-load?
Yes
196
Split the remaining RRHs into two groups
Yes
199
Split the new RRHs into two groups
197
Switch one group of RRHs to a low-load carrier
200
Switch one group of RRHs to the initial carrier

Fig. 19

INTERNATIONAL SEARCH REPORT

International application No.
PCT/CN2007/002437

A. CLASSIFICATION OF SUBJECT MATTER

H04Q7/36(2006.01) i

According to International Patent Classification (IPC) or to both national classification and IPC

B. FIELDS SEARCHED

Minimum documentation searched (classification system followed by classification symbols)

IPC: H04Q7/36;H04Q7/20;H04Q7/24;H04Q7/30;H04B7/00;H04B7/-;H01Q21/-;H01Q25/-

Documentation searched other than minimum documentation to the extent that such documents are included in the fields searched

Electronic data base consulted during the international search (name of data base and, where practicable, search terms used)

WPI;EPODOC;PAJ;IEE;CNKI;CNPAT(CPRS); antenna?, aerial?, distributed, DAS, multi+, load?, flow?, traffic?, base w station?, basestation?, configur+, reconfigur+, assign+, reassign+, select+, reselect+, measur+, monitor+, detect+

C. DOCUMENTS CONSIDERED TO BE RELEVANT

Category*	Citation of document, with indication, where appropriate, of the relevant passages	Relevant to claim No.
X	US5794153A (LUCENT TECHNOLOGIES INC.) 11 Aug. 1998(11.08.1998) column 1 line 24-line 63, column 2 line 63-column 3 line 45, column 6 line 10-line 53 of the description, fig. 2	1-5, 7, 10-14, 16, 19-22, 25
A	the whole document	6, 8-9, 15, 17-18, 23-24, 26-28
X	CN1593023A(TELEFONAKTIEBOLAGET LM ERICSSON) 09 Mar. 2005 (09.03.2005) page 6 line 10-page 7 line15, page 8 line 15-page 9 line 26	1, 2, 10, 11, 19
A	the whole document	3-9, 12-18, 20-28
A	CN1500361A(QUALCOMM INC.) 26 May 2004 (26.05.2004) the whole document	1-28
A	CN1647558A(RADIOFRAME NETWORKS INC.) 27 Jul. 2005(27.07.2005) the whole document	1-28
A	CN1642339A(UNIV DONGNAN) 20 Jul. 2005(20.07.2005) the whole document	1-28

☐ Further documents are listed in the continuation of Box C. ☒ See patent family annex.

* Special categories of cited documents:

"A" document defining the general state of the art which is not considered to be of particular relevance

"E" earlier application or patent but published on or after the international filing date

"L" document which may throw doubts on priority claim (S) or which is cited to establish the publication date of another citation or other special reason (as specified)

"O" document referring to an oral disclosure, use, exhibition or other means

"P" document published prior to the international filing date but later than the priority date claimed

"T" later document published after the international filing date or priority date and not in conflict with the application but cited to understand the principle or theory underlying the invention

"X" document of particular relevance; the claimed invention cannot be considered novel or cannot be considered to involve an inventive step when the document is taken alone

"Y" document of particular relevance; the claimed invention cannot be considered to involve an inventive step when the document is combined with one or more other such documents, such combination being obvious to a person skilled in the art

"&"document member of the same patent family

Date of the actual completion of the international search	Date of mailing of the international search report
19 Dec. 2007(19.12.2007)	**03 Jan. 2008 (03.01.2008)**
Name and mailing address of the ISA/CN The State Intellectual Property Office, the P.R.China 6 Xitucheng Rd., Jimen Bridge, Haidian District, Beijing, China 100088 Facsimile No. 86-10-62019451	Authorized officer LEI, Yini Telephone No. (86-10)62084173

Form PCT/ISA/210 (second sheet) (April 2007)

INTERNATIONAL SEARCH REPORT
Information on patent family members

International application No.
PCT/CN2007/002437

Patent Documents referred in the Report	Publication Date	Patent Family	Publication Date
US5794153A	11.08.1998	None	
CN1593023A	09.03.2005	WO03047130A1	05.06.2003
		SE0104036A	31.05.2003
		AU2002353688A1	10.06.2003
		SE523400C2	13.04.2004
		EP1454433A1	08.09.2004
		EP1454433 B1	10.01.2007
		JP2005510944T T	21.04.2005
		US2005123301A1	09.06.2005
		DE60217541D D1	22.02.2007
		DE60217541T T1	08.11.2007
CN1500361A	26.05.2004	US2002103001A1	01.08.2002
		WO02062090A2	08.08.2002
		AU2002250136A1	12.08.2002
		AU2002250136A8	20.10.2005
		US7085530B2	01.08.2006
CN1647558A	27.07.2005	WO03073676A2	04.09.2003
		US2004014466A1	22.01.2004
		AU2003230558A1	09.09.2003
		EP1479251A2	24.11.2004
		KR20050012225A	31.01.2005
		AU2003230558A8	27.10.2005
CN1642339A	20.07.2005	None	

Form PCT/ISA/210 (patent family annex) (April 2007)

City of New York, State of New York, County of New York

I, Shayna Himelfarb, hereby certify that the document "**WO2009021359A1**" is, to the best of my knowledge and belief, a true and accurate translation from Chinese into English.

Shayna Himelfarb

Sworn to before me this
June 2, 2022

Signature, Notary Public

WENDY POON
STATE
OF NEW YORK
NOTARY PUBLIC
Qualified in
Queens County
01PO6356754
MY COMMISSION EXPIRES 04-03-2025

Stamp, Notary Public