Trials@uspto.gov
Tel: 571-272-7822

Paper 15
Entered: February 9, 2021

UNITED STATES PATENT AND TRADEMARK OFFICE

BEFORE THE PATENT TRIAL AND APPEAL BOARD

JOHN MEZZALINGUA ASSOCIATES, LLC,
Petitioner,

v.

DALI WIRELESS INC.,
Patent Owner.

Case IPR2020-01430
Patent 10,334,499 B2

Before KARL D. EASTHOM, MELISSA A. HAAPALA, and SHARON FENICK, *Administrative Patent Judges*.

FENICK, *Administrative Patent Judge*.

DECISION
Denying Institution of *Inter Partes* Review
35 U.S.C. § 314

T-Mobile v. Dali Wireless
T-Mobile Exhibit 1019

I. INTRODUCTION

A. Background

John Mezzalingua Associates, LLC ("Petitioner") filed a Petition to institute an *inter partes* review of claims 1–19 ("challenged claims") of U.S. Patent No. 10,334,499 B2 (Ex. 1001, "the '499 patent") pursuant to 35 U.S.C. §§ 311–319. Paper 3 ("Pet."). Dali Wireless Inc. ("Patent Owner") filed a Preliminary Response. Paper 10 ("Prelim. Resp."). With our authorization (Paper 11), Petitioner filed a Reply relating to our discretion under 35 U.S.C. § 314(a), Paper 12 ("Reply"), and Patent Owner filed a Sur-Reply, Paper 14 ("Sur-Reply"). We have authority under 35 U.S.C. § 6(b)(4) and 35 U.S.C. § 314.

The standard for instituting an *inter partes* review is set forth in 35 U.S.C. § 314(a), which provides that an *inter partes* review may not be instituted "unless . . . there is a reasonable likelihood that the petitioner would prevail with respect to at least 1 of the claims challenged in the petition."

Upon consideration of the Petition, Preliminary Response, and additional briefing we decline to exercise discretion to deny institution under 35 U.S.C. § 314(a), and we determine that Petitioner has not demonstrated a reasonable likelihood that it would prevail in showing the unpatentability of at least one challenged claim of the '499 patent. Accordingly, for the reasons that follow, we do not institute *inter partes* review.

B. Real Parties in Interest

Petitioner indicates that John Mezzalingua Holdings, LLC, JMA Wireless LTD, Teko Telecom Srl, XRN, LLC, and CellH, LLC are

additional real parties in interest. Pet. 1. Patent Owner indicates no additional real parties in interest. Paper 5, 1.

C. Related Proceedings

The parties inform us that the '499 patent was asserted against Petitioner in the following district court case: *Dali Wireless, Inc. v. John Mezzalingua Associates, LLC d/b/a JMA Wireless*, 1:19-cv-02367-RGA (D. Del.) ("the related district court proceeding"). Pet. 1; Paper 5, 1. Petitioner additionally describes a concurrently-filed petition for *inter partes* review for U.S. Patent No. 9,820,171 B2 as a related matter. Pet. 1 (referring to IPR2020-01432).

D. The '499 Patent

The '499 patent is titled "Distributed Antenna System" and relates to a Distributed Antenna System (DAS) that "enables a high degree of flexibility to manage, control, enhance, [and] facilitate the usage and performance of a distributed wireless network." Ex. 1001, codes (54), (57). According to one embodiment of the invention, a distributed antenna system includes a digital access unit (DAU), which connects to associated base stations. *Id.* at 4:40–44. The distributed antenna system receives downlink data via radio frequency (RF) signals from a base station. *Id.* at 4:63–65. The DAUs provide the received signals to multiple digital remote units (DRUs). *Id.* at 4:41–44, 5:4–9.

Figure 1 of the '499 patent, reproduced below, is a block diagram showing the basic structure and an example of a downlink (base station to DRU) transport scenario.

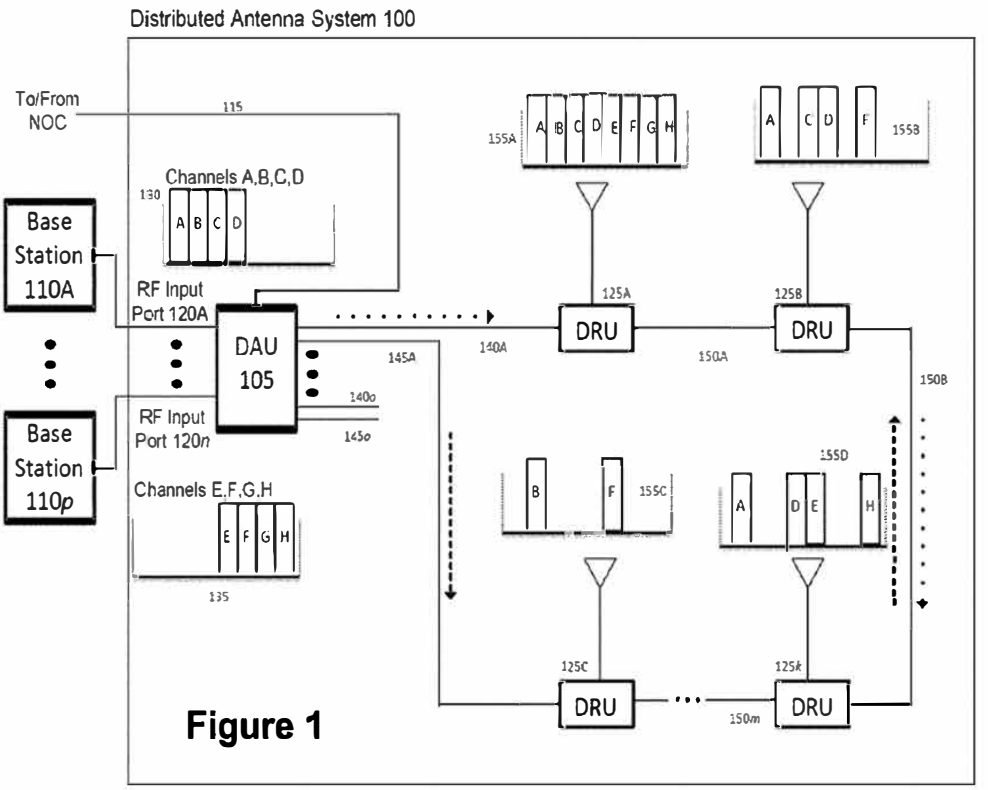

Figure 1

Figure 1 depicts DAU 105, which provides signals to DRUs 125A, 125B, 125C, through 125*k*. *Id.* at 4:41–44, 4:62–5:6. DAU 105 receives composite downlink input signal 130, containing carriers[1] A–D, from base

[1] Elements A–H are alternatively referred to as "carriers" and as "channels" in the '499 patent. *Compare* Ex. 1001 at 5:20–28, 7:61–65, 8:46–49, Fig. 1 (describing A–H as channels) *with id.* at 5:65–6:2, 6:18–26, 6:34–38, 6:45–49, 7:23–25, 7:47–50, (describing A–H as carriers); *see also id.* at 5:34–36, 5:45–52, 7:63–8:2. The '499 patent additionally specifies that "a wireless operator may have more than one RF carrier per channel allocated to a single base station" and describes Figure 1 and the related disclosure as explaining the situation where composite downlink signal 130 from a first base station comprises carriers A–D. *Id.* at 5:53–66. We use "carriers" in this section to refer to A–H.

station 110a. *Id.* at 5:62–66. DAU 105 receives second composite downlink input signal 135, containing carriers E–H, from base station 110p. *Id.* at 5:66–6:2. DRUs 125A, 125B, 125C, through 125*k*. DRUs 125A–k are connected in a ring configuration via bidirectional optical cables, and the downlinked carriers are propagated around the ring, or alternatively, in a daisy change configuration, to provide all carriers to all DRUs 125A–k. *Id.* at 4:35–39, 5:4–9, 5:20–31, 6:9–20, 6:63–7:2. While the exemplary embodiment of Figure 1 shows all carriers arriving at each DRU, "the number of channels received at each DRU is assigned by the DAU and need not be equal, adjacent or sequential, but instead will typically be any configuration that optimizes network utilization." *Id.* at 5:28–31.

Generally, software settings within a DRU are configured either manually or automatically to determine which of the carriers received at the DRU are present in the downlink output signal at the antenna port of the DRU. *Id.* at 6:21–27. In one embodiment, the DAU monitors which carriers and corresponding time slots are active for each DRU. *Id.* at 12:15–17. The DAU communicates with a software module in the DRU to enable or disable the transmission of specific radio resources by the DRU. *Id.* at 12:17–37.

E. The Asserted Grounds of Unpatentability

Petitioner challenges the patentability of claims 1–19 of the '499 patent based on the following asserted grounds:

Reference(s)	Basis	Claims Challenged
Oh[2]	§ 102	1–5, 8–11, 14–16, 19
Oh, Cannon[3]	§ 103	1–5, 8–11, 14–16, 19

[2] Oh et al., US 7,286,507 B1, iss. Oct 23, 2007 (Ex. 1003).
[3] Cannon et al., US 2010/0177760 A1, pub. July 15, 2010 (Ex. 1004).

Reference(s)	Basis	Claims Challenged
Oh , Fischer[4]	§ 103	5–8, 12, 13, 17, 18

Petitioner also relies on the declaration of James A. Proctor, Jr, Ex. 1017.

F. Illustrative Claim

Claims 1, 8, and 14 of the challenged claims of the '499 patent are independent. Claim 1 illustrates the claimed subject matter:

> 1. A system for transporting wireless communications, comprising:
>
> a baseband unit;
>
> a plurality of signal sources, including at least a first signal source and a second signal source;
>
> a plurality of remote units, including at least a first remote unit and a second remote unit;
>
> wherein the baseband unit comprises a plurality of interfaces to communicatively couple the baseband unit to the plurality of signal sources;
>
> wherein the baseband unit is configured to receive a plurality of radio resources from the first signal source and the second signal source;
>
> wherein the baseband unit is configured to send a digital representation of a first set of radio resources to the first remote unit at a first point in time, the first set of radio resources for transmission at an antenna of the first remote unit;
>
> wherein the baseband unit is configured to send a digital representation of a second set of radio resources to the first remote unit at a second point in time, the second set of radio resources for transmission at the antenna of the first remote unit;

[4] Fischer, US 2007/0008939 A1, pub. Jan. 11, 2007 (Ex. 1005).

> wherein a number of radio resources in the first set of radio resources is different from a number of radio resources in the second set of radio resources; and
>
> wherein the baseband unit is configured to receive digital signals from each of the plurality of remote units.

Ex. 1001, 14:2–29.

II. ANALYSIS

A. Person of Ordinary Skill in the Art

Petitioner asserts that a person of ordinary skill in the art "would have at least: (1) a bachelor's degree in electrical engineering; and (2) a minimum of 3-4 years of industry experience in wireless communications networks and engineering," and that "an individual with an advanced degree in electrical engineering would require less industry experience (e.g., 1-2 years)." Pet. 7; Ex. 1017 ¶ 42. Patent Owner argues that "the above POSITA at the time of the '499 patent would also have industry experience dealing with wireless devices such as remote units and antennas." Prelim. Resp. 14. Other than specifying the type of industry experience required for one of ordinary skill in the art, Patent Owner does not appear to disagree with applying Petitioner's proposed level of skill. *See id.* We adopt Petitioner's provided definition for the level of skill of a person of ordinary skill in the art as reasonable and consistent with the prior art.

B. Claim Construction

In an *inter partes* review, the Board construes each claim "in accordance with the ordinary and customary meaning of such claim as understood by one of ordinary skill in the art and the prosecution history pertaining to the patent." 37 C.F.R. § 42.100(b). Under the same standard applied by district courts, claim terms take their plain and ordinary meaning

as would have been understood by a person of ordinary skill in the art at the time of the invention and in the context of the entire patent disclosure. *Phillips v. AWH Corp.*, 415 F.3d 1303, 1313 (Fed. Cir. 2005) (en banc). "There are only two exceptions to this general rule: 1) when a patentee sets out a definition and acts as his own lexicographer, or 2) when the patentee disavows the full scope of a claim term either in the specification or during prosecution." *Thorner v. Sony Comput. Entm't Am. LLC*, 669 F.3d 1362, 1365 (Fed. Cir. 2012).

Petitioner requests that we construe the claim terms "signal sources," "radio resources," and "baseband unit," each of which appear in each challenged independent claim. Pet. 8–11. Patent Owner addresses Petitioner's proposed constructions and additionally discusses the construction of "baseband unit . . . configured to send a digital representation of a first set of radio resources" and "baseband unit . . . configured to send a digital representation of a first set of radio resources," which appears in claim 1 and substantially similarly in claim 8. Prelim. Resp. 14–24.

1. "signal sources"

Because the '499 patent describes that the source of signals distributed by the described antenna system are base transceiver stations that transmit RF communications, Petitioner argues that the construction for "signal source" is "an RF transceiver or transmitter." Pet. 8 (citing Ex. 1001, 4:63–65; Ex. 1017 ¶¶ 48, 50). Patent Owner argues that '499 patent describes the antenna system as designed and configured to work with operator networks. Prelim. Resp. 14–15 (citing Ex. 1001, 1:33–43). Patent Owner argues that "[a] POSITA would review the '499 patent and understand that the inventions are directed to allocating radio resources inside the DAS and do

not impose specific limitations on components outside the DAS." *Id.* at 16. Therefore, Patent Owner contends we should construe "signal sources" as "an operator's network."

We determine that "signal sources" does not require express construction to address the asserted grounds of unpatentability in this proceeding. *Vivid Techs., Inc. v. American Sci. & Eng'g, Inc.*, 200 F.3d 795, 803 (Fed. Cir. 1999) ("[O]nly those terms need be construed that are in controversy, and only to the extent necessary to resolve the controversy.").

2. "radio resources"

The claims require that "a plurality of radio resources" be received from a first signal source. *See, e.g.*, Ex. 1001, 14:12–14. Petitioner and Patent Owner each cite the '499 patent's exemplary description of radio resources as including "RF carriers, CDMA codes or TDMA time slots." Pet. 9 (citing Ex. 1001, 12:61–62); Prelim. Resp. 17 (citing Ex. 1001, 12:5–9).

Petitioner contends that the proper construction of "radio resource" is "an analog component of an RF spectrum." Pet. 8–9. Petitioner cites Mr. Proctor's declaration evidence and a reference book to argue that "radio resources" "consist of an 'RF spectrum'" and that carriers and CDMA codes are components of the RF spectrum. *Id.* at 9 (citing Ex. 1017 ¶¶ 56–71; Ex. 1012, 7, 12–15, 26, 28, 30–34, 108–109, 278, 297, FIGS 2.3, 2.4, 2.7, 2.13, 2.17, 2.19, 4.15). Petitioner argues that because the claim concerns both "radio resources" and "digital representations of 'radio resources'," "the structure of the claims make clear that radio resources are analog, not digital." *Id.* at 9.

Patent Owner, citing the examples provided in the '499 patent, argues that "radio resources" should be construed to mean "wireless resources such as RF carriers, CDMA codes, or TDMA time slots." Prelim. Resp. 16–18 (citing Ex. 1001, 2:5–9). Patent Owner argues that "[t]he '499 patent further explains that radio resources refer to the frequency, coding, or time slot a remote unit should use to send user communications (e.g., voice or data) [via its antenna]." *Id.* at 17 (citing Ex. 1001, 12:5–9). Patent Owner further argues that, as radio resources should include CDMA codes or TDMA time slots, Petitioner's construction is over-broad. *Id.* at 18.

Petitioner does not clearly explain why its assertions that radio resources consist of an RF spectrum and that these radio resources can be sent in a digital representation lead to the conclusion that "radio resources" should be construed to mean "an analog component of an RF spectrum." We do not see how the equivalence of "radio resources" to an analog *component* of an RF spectrum follows from the indication in the claims that the baseband unit sends a digital representation of radio resources. To the extent that Petitioner intends its construction of "radio resources" to encompass the data being transmitted via RF, we disagree that is a proper construction of the term. The '499 patent gives as examples of "radio resources" RF carriers, CDMA codes, and TDMA time slots. *See* Ex. 1001, 12:5–37. No indication is given that the data carried wirelessly using these over the interface to the DAU is, itself, a radio resource. Rather, the '499 patent describes deploying "radio resources" "for *use* by a particular DRU which need[s] those radio resources within its coverage area," or modifying system configuration to "remove" "radio resources" "for *use* by a particular DRU." *Id.* at 12:58–13:2 (emphasis added).

Thus, we agree with Patent Owner that the '499 patent's exemplary explanation that radio resources may be "RF carriers, CDMA codes or TDMA time slots" appears more useful in determining how to construe "radio resources." Prelim. Resp. 17; Ex. 1001, 12:6–8, 12:61–62, 12:66–13:1. The '499 patent describes that digital-up converters within the DRUs allow the radio resources, such as "any specific narrow frequency band or bands, RF carriers, or RF channels" or "any specific time slot or time slots of [a] carrier," to "appear at the output of a given DRU." *Id.* at 7:3–37, 10:11–27. The '499 patent further describes, in an exemplary embodiment where various carriers are distributed to DRUs, that carriers are present at the antenna port of the DRU. *Id.* at 6:21–24, 6:34–38, 6:55–58, 12:29–36. The '499 describes an embodiment in which "where a wideband CDMA signal is present within . . . the bandwidth corresponding to a first carrier a the input port to [a] DAU . . . the transmitted signal at the antenna ports of [certain DRUs] will be a wideband CDMA signal which is virtually identical to the signal present within the bandwidth corresponding to that first carrier at the input port to [the] DAU." *Id.* at 10:2–10. These portions of the '499 patent confirm that the claim term "radio resources," in the context of the patent disclosure, would not properly be used to refer only to the data transmitted via RF, but refers to information defining or describing the way that data is being transmitted. In context, the related claim term "digital representations of radio resources" encompasses information about radio carriers, bands, codes, or other similar information for use in "transmission at the antenna" of a remote unit.

We do not provide a specific construction for "radio resources." Instead, for the reasons discussed above, we determine that the plain and

ordinary meaning of "radio resources" as would have been understood by a person of ordinary skill in the art at the time of the invention and in the context of the entire patent disclosure: (1) includes RF carriers, CDMA codes, and TDMA time slots; and (2) excludes data that does not incorporate information used in the transmission of the radio resource from an antenna of the remote unit.

3. "baseband unit"

Petitioner argues that the scope of the term "baseband unit," found in each independent challenged claim, should be construed to include "a device that performs conversion to and from baseband signals, *e.g.*, digitized streams." Pet. 10–11 (citing Ex. 1001, 4:66–5:6; Ex. 1017 ¶ 76). Petitioner cites disclosures of two other DAS references to support this conclusion. *Id.* (citing Ex. 1007 ¶ 6; Ex. 1004 ¶ 21; Ex. 1017 ¶¶ 77–87).

Patent Owner argues that "baseband unit" should be construed as "a unit that manages baseband communications between an operator network and one or more digital remote units." Prelim. Resp. 19–20.

We determine that "baseband unit" does not require express construction to address the asserted grounds of unpatentability in this proceeding. *Vivid Techs.*, 200 F.3d at 803.

4. "baseband unit . . . configured to send a digital representation of a [first/second] set of radio resources"

Petitioner does not address the claim terms "baseband unit . . . configured to send a digital representation of a [first/second] set of radio resources," but Patent Owner argues that we should construe this term because it is in contention in the related district court proceeding. Prelim. Resp. 22. However, we determine that these terms do not require express

construction to address the asserted grounds of unpatentability in this proceeding. *Vivid Techs.*, 200 F.3d at 803.

C. Principles of Law

To establish anticipation, each and every element in a claim, arranged as recited in the claim, must be found in a single prior art reference. *See Net MoneyIN, Inc. v. VeriSign, Inc.*, 545 F.3d 1359, 1369 (Fed. Cir. 2008); *Karsten Mfg. Corp. v. Cleveland Golf Co.*, 242 F.3d 1376, 1383 (Fed. Cir. 2001). Although the elements must be arranged or combined in the same way as in the claim, "the reference need not satisfy an *ipsissimis verbis* test," i.e., identity of terminology is not required. *In re Gleave*, 560 F.3d 1331, 1334 (Fed. Cir. 2009); *accord In re Bond*, 910 F.2d 831, 832 (Fed. Cir. 1990).

A claim is unpatentable under 35 U.S.C. § 103 if the differences between the subject matter sought to be patented and the prior art are such that the subject matter as a whole would have been obvious at the time the invention was made to a person having ordinary skill in the art to which said subject matter pertains. *KSR Int'l Co. v. Teleflex Inc.*, 550 U.S. 398, 406 (2007). The question of obviousness is resolved on the basis of underlying factual determinations, including (1) the scope and content of the prior art; (2) any differences between the claimed subject matter and the prior art; (3) the level of skill in the art; and (4) objective evidence of nonobviousness, i.e., secondary considerations. *See Graham v. John Deere Co.*, 383 U.S. 1, 17–18 (1966).

"In an [*inter partes* review], the petitioner has the burden from the onset to show with particularity why the patent it challenges is unpatentable." *Harmonic Inc. v. Avid Tech., Inc.*, 815 F.3d 1356, 1363 (Fed.

Cir. 2016) (citing 35 U.S.C. § 312(a)(3) (requiring [*inter partes*] review petitions to identify "with particularity . . . the evidence that supports the grounds for the challenge to each claim")). This burden never shifts to Patent Owner. *See Dynamic Drinkware, LLC v. Nat'l Graphics, Inc.*, 800 F.3d 1375, 1378 (Fed. Cir. 2015) (citing *Tech. Licensing Corp. v. Videotek, Inc.*, 545 F.3d 1316, 1326–27 (Fed. Cir. 2008)) (discussing the burden of proof in *inter partes* review). Furthermore, Petitioner must explain with particularity how the prior art would have rendered the challenged claims unpatentable. 35 U.S.C.A. § 312(a)(3); 37 C.F.R. § 42.104 ("The petition must specify where each element of the claim is found in the prior art patents or printed publications relied upon.").

D. Asserted Anticipation Based on Oh

Petitioner asserts Oh anticipates claims 1–5, 8–11, 14–16 and 19. Pet. 19–53. Patent Owner addresses these assertions in the Preliminary Response. Prelim. Resp. 31–44.

1. Overview of Oh

Oh is titled "Method and System for Dynamically Routing between a Radio Access Network and Distributed Antenna System Remote Antenna Units" and describes a DAS system that includes mapping data that correlates network coverage segments (such as cell sectors) with addresses for the remote antenna units, to distribute coverage as desired throughout the DAS. Ex. 1003, codes (54), (57). Oh includes a block diagram of a communications system in its Figure 1, reproduced below.

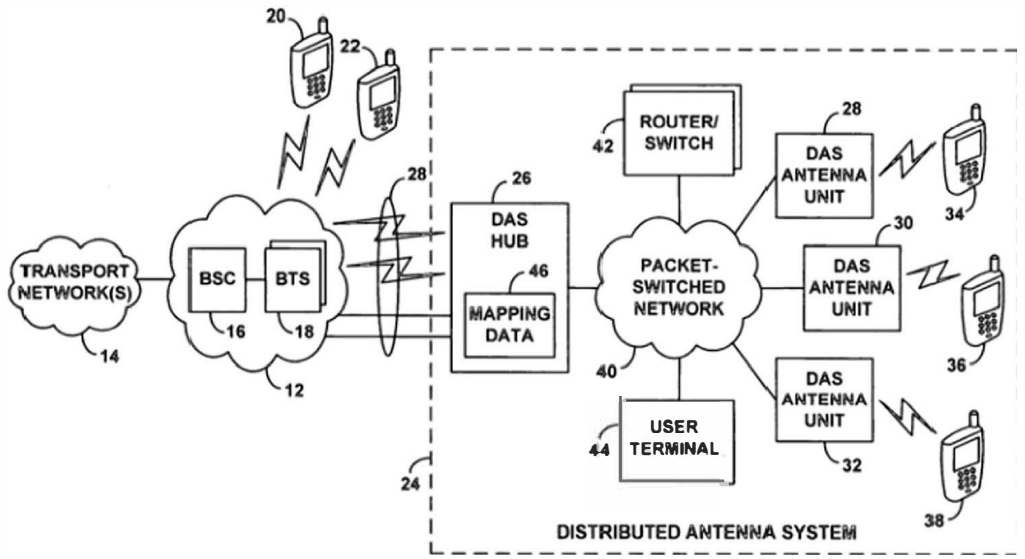

FIG. 1

Figure 1 of Oh illustrates DAS 24 that communicates with radio access network (RAN) 12, which is in RF communication with wireless devices 20 and 22. *Id.* at 4:33–46. RAN 12 defines coverage segments; each coverage segment may be a cell, cell sector, or other coverage area of RAN 12, or a particular carrier frequency or spreading code. *Id.* at 4:47–64. Each coverage segment "constitutes a mechanism in or through which the RAN communicates with client devices that it serves." *Id.* at 4:47–50.

DAS 24 extends coverage of RAN 12. *Id.* at 4:65–5:1. DAS hub 26 in DAS 24 may be connected to RAN 12 and receive signals from BTSs 18 via, e.g., an antenna structure receiving signals from RAN 12, or directly via a fiber-optic cable. *Id.* at 4:40–46, 5:1–56. DAS hub 26 stores mapping data 46, which correlates RAN coverage segments of RAN 12 with addresses of DAS antenna units 28, 30, 32. *Id.* at 7:35–47. DAS hub 26 uses the mapping data 46 to determine one or more antenna unit addresses to

which it should route incoming (downlink) traffic from RAN 12 to DAS antenna units, and which coverage segments to transmit outgoing data from DAS antenna units to RAN 12. *Id.* at 7:42–53, 9:3–11, Fig. 2. DAS hub 26 and the DAS antenna units communicate via packet-switched network 40. *Id.* at 6:6–22.

2. Analysis of Asserted Anticipation by Oh

We have reviewed the parties' assertions and supporting evidence. For the reasons discussed below, Petitioner does not demonstrate a reasonable likelihood of prevailing in its challenge to claims 1–5, 8–11, 14–16 and 19 on the basis of anticipation by Oh.

a. *Independent Claim 1*

Petitioner relies on Oh's DAS 24 as disclosing the system of claim 1. Pet. 19–41. Petitioner argues that Oh's DAS hub 26 discloses the baseband unit, that the transceivers of BTSs 18 disclose the first and second signal sources, and that the physical layer connections 28 of hub 26 disclose the plurality of interfaces to communicatively couple the baseband unit to the plurality of signal sources. *Id.* at 22–26 (citing Ex. 1003 2:8, 4:40–46, 8:1–31, Fig. 1; Ex. 1017 ¶¶ 128, 129, 136, 137), 28–31 (citing Ex. 1003 5:3–10; Ex. 1017 ¶ 146). Petitioner further argues that Oh's DAS antenna units 30 and 32 disclose the first remote unit and second remote unit of claim 1. *Id.* at 27–28 (citing Ex. 1003 5:57–6:5, Fig. 1; Ex. 1017 ¶¶ 140–142).

With respect to the radio resources, Petitioner argues that these are disclosed by Oh's radio access (RAN) coverage segments, which can take the form of a cell, cell sector, or CDMA sector. *Id.* at 31–33 (citing Ex. 1003 2:64–3:16; 4:47–56; 4:47–63, 9:3–11, Fig. 1; Ex. 1017 ¶¶ 150–155).

Petitioner argues that the claim term "wherein the baseband unit is configured to send a digital representation of a first set of radio resources to the first remote unit at a first point in time, the first set of radio resources for transmission at an antenna of the first remote unit" is disclosed by the description of Oh's DAS. Pet. 33–37. Oh's DAS, according to Petitioner, digitizes incoming traffic from the BTSs 18, packetizes that traffic, and sends the IP packets to the corresponding DAS antenna unit. *Id.* at 34–35 (citing Ex. 1003 2:3–8, 8:6–10, Fig. 1; Ex. 1017 ¶ 158). Petitioner contends that "Oh explains that the digital representations of the radio resources are then converted to analog RF and transmitted by the remote DAS antenna unit: '[u]pon receipt of those IP packets at the DAS antenna units having the destination IP addresses, each recipient DAS antenna unit may then depacketize the digitized bit stream, convert the bit stream to an RF signal, and emit the RF signal via its antenna for receipt by any wireless client devices operating in its local coverage area.'" *Id.* at 35 (quoting Ex. 1003 8:10–16, citing Ex. 1007 ¶ 159).

Patent Owner disputes that Oh discloses that digital representations of radio resources are sent to a DAS antenna unit. Prelim. Resp. 35–37. Patent Owner argues that "Oh's DAS antenna units are pass-through devices with static configurations as they merely relay whatever traffic is sent to them according to the mapping or routing table. Oh simply does not disclose sending configuration information or 'digital representations' of a set of radio resources to the antenna units that indicates which sets of 'radio resources' to use." Prelim. Resp. 37 (emphasis omitted). Patent Owner

further contends that "Petitioner appears to confuse RF traffic in Oh with radio resources." *Id.* (emphasis omitted). We agree in material part.

Oh describes the DAS hub "receiving *incoming communication traffic* (signaling and/or bearer data) *in* a source RAN coverage segment" and "forwarding *the incoming communication traffic* via the packet-switched network." Ex. 1003, 3:6–15 (emphasis added). While Petitioner argues that Oh's RAN coverage segments are the radio resource, and while communications between the DAS antenna units and user equipment is described as RF communication, there is no indication in Oh that the DAS antenna units transmit the radio resource (RAN coverage segment), a digital representation of which was received at the DAS hub. *See* Ex. 1003, 8:1–16 (describing converting and transmitting "incoming traffic").

In accordance with our claim construction of "radio resources," *supra* Section II.B.2, Oh's transmission of communication traffic to the DAS antenna units, which does not incorporate information used in the transmission of the radio resource from an antenna of the remote unit, does not disclose the sending of a digital representation of radio resources. Petitioner does not show how Oh discloses "radio resources" being received by the DAS hub from the BTSs (first and second signal sources) and sent (in a digital representation) so those radio resources can be transmitted at the antenna of that unit. Rather, on the present record, we determine that Oh discloses only underlying data that arrived in the radio resource as included in the "incoming communication traffic" which is sent to the Oh DAS antenna units. Therefore, we determine that Petitioner has not demonstrated

a reasonable likelihood that it would prevail in showing claim 1 anticipated by Oh.

b. *Independent claims 8 and 14*

Petitioner's arguments with respect to claims 8 and 14 as anticipated by Oh, with respect to the "radio resources" discussed in those claims, refer to Petitioner's arguments relating to claim 1, and therefore suffer from the same defect. Pet. 48–49, 51–52. We thus determine that Petitioner has not demonstrated a reasonable likelihood that it would prevail in showing claims 8 and 14 are anticipated by Oh.

c. *Claims 2–5, 9–11, 15, 16 and 19*

Petitioner's arguments with respect to claims 2–5, 9–11, 15, 16 and 19 as anticipated by Oh, depend on the arguments relating to the independent claims from which they depend, and therefore suffer from the defect discussed above. Pet. 41–46, 49–50, 52–53. We thus determine that Petitioner has not demonstrated a reasonable likelihood that it would prevail in showing claims 2–5, 9–11, 15, 16 and 19 anticipated by Oh.

E. Analysis of Asserted Obviousness over Oh and Cannon

Petitioner asserts claims 1–5, 8–11, 14–16 and 19 would have been obvious over Oh and Cannon. Pet. 19–53. Patent Owner addresses these assertions in the Preliminary Response. Prelim. Resp. 31–44.

1. Overview of Cannon

Cannon is titled "Systems and Methods for Improved Digital RF Transport in Distributed Antenna Systems" and describes a DAS system in which RF signals from a base station are transmitted to remote units, which reconstruct the RF signals from the signal and cause the reconstructed RF signals to be transmitted from an antenna. Ex. 1004 codes (54), (57), ¶ 20.

Cannon includes a block diagram of its DAS system in its Figure 1, reproduced below.

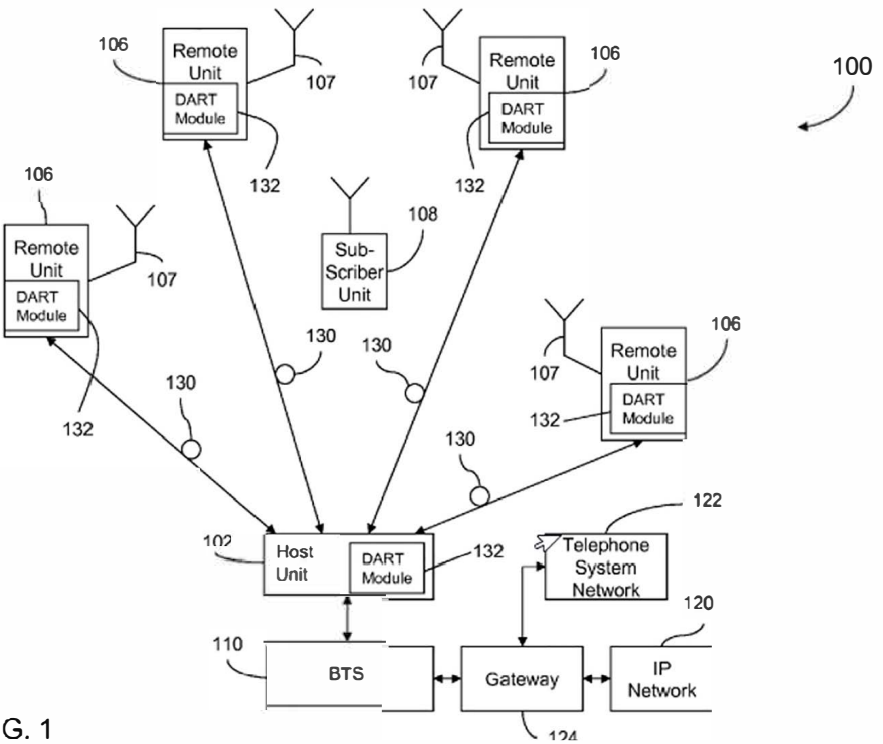

FIG. 1

Figure 1 depicts DAS 100, including host unit 102 and remote units 106. *Id.* ¶ 18. Host unit 102 is coupled to at least one base transceiver station (BTS) 110. *Id.* ¶ 19. Host unit 102 receives downlink signals from BTS 110 and generates transport signals for transmitting to one or more remote unit 106. *Id.* ¶ 20. "[T]he downlink and uplink transport signals transmitted between host unit 102 and remote units 106 over communication links 130 are generated by digitizing the downlink and uplink RF signals, respectively." *Id.* ¶ 21. "In other words, the downlink and uplink transport signals are not analog RF signals but instead are digital data signals representing digital RF samples of a modulated RF signal." *Id.* Thus, for example, if a

communication is received as a modulated RF signal in the 900 MHz band, the host unit generates baseband digital samples of that modulated 900 MHz RF signal, which are sent to the remote unit, where they are converted from the digital version to an analog RF signal to be wirelessly radiated from the remote unit's antenna. *Id.* A digital to analog radio frequency transceiver (DART) module performs this conversion. *Id.* at ¶¶ 22–25.

DART modules in remote units are specific for a particular frequency band, but may be reprogrammed to meet the changing needs of the end user. *Id.* at ¶¶ 25, 46.

2. Analysis of Asserted Obviousness Over Oh and Cannon

We have reviewed the parties' assertions and supporting evidence. For the reasons discussed below, Petitioner does not demonstrate a reasonable likelihood of prevailing in its challenge to claims 1–5, 8–11, 14–16 and 19 on the basis of obviousness over Oh and Cannon.

a. *Claim 1*

To show obviousness of claim 1 over Oh and Cannon, Petitioner relies generally on Oh, but combines it with Cannon's "translation from analog radio resources" to a "digital representation of an RF, IF, or baseband version of the original RF signal." Pet. 16–17 (citing Ex. 1004 ¶ 21, Fig. 3; Ex. 1017 ¶ 105). Petitioner argues that the DART module of Cannon would provide a "digital baseband" output to Cannon's remote radio units, which would comprise a digital representation of the original RF signal. *Id.* at 53–54 (citing Ex. 1017 ¶ 218); Ex. 1017 ¶¶ 220–221.

Petitioner argues that

> [a person of ordinary skill in the art] would be motivated to substitute Oh's digital-to-analog software with Cannon's because it is a simple substitution of one software module with

> another software module, in order to gain any benefits in various protocols (e.g., CPRI, etc.) or efficiency that Cannon's DART module offered beyond Oh's. (EX1017 ¶ 218.) Incorporating Cannon's DART module into Oh's system would also beneficially allow separate systems from Oh and Cannon to interoperate so that Oh's baseband unit would send signals to Cannon's remote units and vice versa. (EX1017 ¶ 218.)

Pet. 54.

Patent Owner argues that the motivation to combine provided by Petitioner is insufficient to meet the Petitioner's burden with respect to obviousness. Prelim. Resp. 46–48.

We recognize that "[t]o satisfy its burden of proving obviousness, a petitioner cannot employ mere conclusory statements." *In re Magnum Oil Tools Int'l, Ltd.*, 829 F.3d 1364, 1380 (Fed. Cir. 2016). The asserted motivation "to gain any benefits in various protocols . . . or efficiency" that Cannon's DART module might provide, without more, seems so nebulous as to be generic. *See ActiveVideo Networks, Inc. v. Verizon Comms., Inc.*, 694 F.3d 1312, 1328 (Fed. Cir. 2012). The tautologous motivation to combine elements from Cannon with the Oh system so that a system combining Oh and Cannon would interoperate is similarly unavailing. Further, we are unpersuaded that the combination is a simple substitution. We also note that there is no discussion of a reasonable expectation of success. *Intelligent Bio-Sys., Inc. v. Illumina Cambridge Ltd.*, 821 F.3d 1359, 1367–68 (Fed. Cir. 2016) (holding that an obviousness determination requires finding "both 'that a skilled artisan would have been motivated to combine the teachings of the prior art references to achieve the claimed invention, and that the skilled artisan would have had a reasonable expectation of success in doing so.'" (citation omitted)).

Thus, we agree with Patent Owner that Petitioner has not adduced a motivation to combine Oh and Cannon. For this reason, Petitioner does not demonstrate a reasonable likelihood of prevailing in its challenge to claim 1 on the basis of obviousness over Oh and Cannon.

Petitioner's arguments for the obviousness of claims 8 and 14 over Oh and Cannon rely on the same or substantially the same arguments as presented for claim 1. Pet. 61–63, 64–65. Thus, for the same reason, Petitioner does not demonstrate a reasonable likelihood of prevailing in its challenge to claims 8 and 14 on the basis of obviousness over Oh and Cannon.

b. *Claim 5*

Petitioner's argument that claim 5 would have been obvious over Oh and Cannon relies on its arguments with respect to the obviousness of claim 1over Oh and Cannon. Pet. 59. Petitioner presents an additional argument that two elements of Oh could be co-located. *Id.* at 59–60 (citing Ex. 1004 ¶ 2; Ex. 1017 ¶ 235). This argument provides a separate motivation for the combination of the arrangement in Cannon with the elements of Oh. *Id.* at 60–61 (citing Ex. 1017 ¶ 239). We note that this motivation to combine is similarly deficient, as it argues only that the combination "would perform the same functions as they did separately, with the only difference being the geographical placement of the components." *Id.*

The argument with respect to claim 5 suffers from the same deficits discussed above with respect to claim 1, to the extent it relies on the argument of obviousness over Oh and Cannon. In addition, Petitioner's reasoning for the combination for the additional limitation of claim 5 is similarly deficient, as it does not provide a motivation to combine. *See*

Belden Inc. v. Berk-Tek LLC, 805 F.3d 1064, 1073 (Fed. Cir. 2015) ("obviousness concerns whether a skilled artisan not only *could have made* but *would have been motivated to make* the combinations or modifications of prior art to arrive at the claimed invention").

c. *Claims 2–4, 9–11, 15, 16, and 19*

Petitioner's arguments for claims 2–4, 9–11, 15, 16, and 19 rely on the arguments for obviousness over Oh and Cannon of the independent claims from which they depend, and therefore suffer from the defect discussed above. Pet. 58–59, 63–64, 65–66. We thus determine that Petitioner has not demonstrated a reasonable likelihood that it would prevail in showing claims 2–4, 9–11, 15, 16, and 19 would have been obvious over Oh and Cannon.

F. Asserted Obviousness Based on Oh and Fischer

Petitioner asserts claims 5–8, 12, 13, 17, and 18 would have been obvious over a combination of Oh and Fischer. Pet. 66–76.

Petitioner's assertions with respect to claims 5–7, 12, 13, 17, and 18 are based on arguments relating to the disclosures or teachings of Oh with respect to their independent base claims. Pet. 66–70, 72–76. For the reasons discussed above, these arguments do not demonstrate a reasonable likelihood that Petitioner will prevail in showing claims 5–7, 12, 13, 17, and 18 would have been obvious over Oh and Fischer.

With respect to claim 8, Petitioner relies for each element of the claim, other than the preamble, on the anticipation argument made with respect to claim 8. *Id.* at 70–72. For the reasons discussed above with respect to that argument, Petitioner does not demonstrate a reasonable likelihood that Petitioner will prevail in showing claim 8 would have been obvious over Oh and Fischer.

G. 35 U.S.C. § 325(d) Discretion

Patent Owner asserts that we should exercise our discretion to decline institution under § 325(d) because the Petition relies on Oh and Cannon, which were each submitted in an information disclosure statement during prosecution of the application that issued as the '499 patent, and because during that prosecution a reference was considered that incorporated Fischer. Prelim. Resp. 2–3, 25–30; Sur-Reply. Because we deny institution for the reasons explained above, Patent Owner's request to deny institution under § 325(d) is moot.

III. CONCLUSION

For the foregoing reasons, we do not institute an *inter partes* review.

IV. ORDER

In consideration of the foregoing, it is hereby:

ORDERED that the Petition is denied as to the challenged claims of the '499 patent; and

FURTHER ORDERED that no *inter partes* review is instituted.

PETITIONER:

Denis J. Sullivan
Naresh K. Kannan
Thomas Hoehner
BARCLAY DAMON TOWER
dsullivan@barclaydamon.com
nkannan@barclaydamon.com
thoehner@barclaydamon.com

PATENT OWNER:

S. H. Michael Kim
David D. Schumann
Cliff Win
Michael C. Saunders II
FOLIO LAW GROUP PLLC
michael.kim@foliolaw.com
david.schumann@foliolaw.com
mike.saunders@foliolaw.com