Reducing the Effects of Transmission Impairments in Digital Fiber Optic Systems

Selecting appropriate signal processing techniques can reduce the effects of the major transmission impairments and provide higher data rates, improved error rates, or longer repeaterless spans.

Jack H. Winters, Richard D. Gitlin, and Sanjay Kasturia

Most current multigigabit-per-second digital fiber optic systems use simple modulation and detection techniques, such as on-off keying with matched-filter receiver techniques. However, more complex techniques, such as equalization, coding, and/or multilevel signaling, can be used in lightwave systems to significantly increase the data rate and/or reduce the effect of transmission impairments and improve performance, and in many cases can be easily implemented. The purpose of this article is to provide an overview of these techniques, which become increasingly important as device technology matures, in which case substantial increases in performance (especially for in-place systems) may only be achieved through these techniques.

There are numerous sources of transmission impairments in lightwave systems. These include chromatic and polarization dispersion in the fiber, laser and fiber nonlinearities, nonideal receiver response, echo, and distortion caused by semiconductor optical amplifiers. Fortunately, there are also numerous techniques to reduce these impairments, including coding, equalization, and modulation techniques with multilevel signaling. The main problem facing the system designer is to determine the appropriate techniques for specific impairments, and for which systems these techniques will have the most significant impact on performance. Here, we offer guidelines for selecting signal processing techniques and present several examples of the potential use of these guidelines in both direct- and coherent-detection lightwave systems. Our goal is to determine performance bounds and find important applications for impairment reduction techniques in which the improvement is large and the implementation relatively simple. We are primarily interested in single-mode fiber systems.[1] These techniques can be used for upgrading existing systems (e.g., reducing chromatic and polarization dispersion in systems with previously installed fiber) or as an alternative to the use of more costly transmitters and receivers (e.g., using coding to permit less stringent laser specifications) [2].

In the following section, we briefly discuss the major impairments in lightwave systems. Techniques for reducing impairments are then presented, along with guidelines for their use in lightwave systems. Several examples are presented, and a summary and conclusions are then given.

Transmission Impairments in Lightwave Systems

Here we classify the transmission impairments in lightwave systems into three categories: signal distortion with a single signal, signal distortion between multiple signals, and noise. These impairments are discussed in detail below. The two detection techniques we consider are direct and coherent detection, as shown in Fig. 1. In direct detection, the received optical signal is converted to an electrical signal by a photodiode, with the electrical current proportional to the optical power (i.e., the electrical signal is proportional to the magnitude squared of the optical signal amplitude). In coherent detection, the received signal is added to a local oscillator signal, and the two signals are converted to an electrical signal at a microwave frequency by a photodiode, with the electrical current proportional to the optical field.

Signal distortion (with a single signal) refers to those impairments that distort and broaden the width of pulses, resulting in intersymbol interference (ISI), which limits the maximum bit rate. The key feature of signal distortion is that it is deterministic (can be calculated directly from the impairment); that is, the distortion is bit-pattern-dependent with the distortion for a given pattern fixed (or slowly varying). This distortion results in a narrowing or closing of the received signal eye in the vertical direction (a pattern-dependent signal level at the detector sampling time) and/or the horizontal direction (a pattern-dependent timing jitter). The most extensively analyzed distortion is chromatic dispersion in long-haul systems [3, 4]. This is material dispersion in the fiber, which causes a delay in the received signal spectrum that varies with frequency. The dominant delay distortion is a lin-

JACK H. WINTERS is in the Network Systems Research Department at AT&T Bell Laboratories.

RICHARD D. GITLIN is director of the Communications Systems Research Laboratory at AT&T Bell Laboratories.

SANJAY KASTURIA is a member of the Network Systems Research Department at AT&T Bell Laboratories.

[1] *For an analysis of equalization techniques in multimode fiber systems, see [1].*

0163-6804/93/$03.00 1993 ©IEEE

Exhibit 1032
Infinera Corporation v. Alexander Soto and Walter Soto

ear delay of about -15 ps/km/nm at a wavelength of 1.55 μm in a standard fiber. Thus, the delay variation is linear with distance but fixed for a given length of fiber; that is, it does not vary significantly with time. A second source of distortion is polarization dispersion in long-haul systems [4-7].[2] Polarization dispersion is generated by signal delays that are polarization-dependent. These delays increase with distance and also vary slowly with time (due to temperature and other variations) [6, 9-11]. At a given frequency, two orthogonal polarizations have different delays. Thus, a pulse with a sufficiently narrow frequency spectrum can be received as two pulses with a time delay between them. We group laser nonlinearities and receiver bandwidth limitations as the third source of distortion. Note that this impairment is independent of distance and varies only due to aging. A fourth possible source of dispersion is a semiconductor optical amplifier [12] (fiber optical amplifiers have negligible distortion), and a fifth source is fiber nonlinearities [13, 14].

The above impairments all increase in severity with the signal bandwidth. This bandwidth is lower-bounded by the data rate, but may be much larger than this because of other factors. For a multimode laser, both mode evolution and mode hopping [15, 16] increase the bandwidth of the signal to several nanometers. For a single-frequency (mode) laser, the laser linewidth (due to phase noise) and chirping or relaxation oscillation (with direct modulation of the laser) increase the bandwidth of the signal. A single-frequency laser has a nonzero linewidth because of random variations in the phase of the laser (phase noise), as discussed below. Chirp is the variation in carrier frequency of the laser caused by changes in drive signal amplitude. Similarly, relaxation oscillation is the variation (undesired oscillation) in amplitude of the laser caused by changes in drive signal amplitude. Note that chirp (and relaxation oscillation) can be avoided if the laser itself is used in the cw mode with the modulation being done with an external modulator.

The second impairment is interference between multiple signals in different frequency bands on the same fiber. This can be due to nonlinearities in the fiber [13, 14] or in semiconductor optical amplifiers [12]. In addition, in duplex systems echo can also degrade performance. Note that these distortions are deterministic.

The third class of transmission impairment we consider is noise, which varies randomly from bit to bit. Noise in the received signal consists of shot noise, thermal noise, and, with optical amplifiers, amplified spontaneous emission (ASE) noise. Shot noise is the quantum noise due to the fact that the received signal is actually a series of photons. The number of photons received during each symbol interval has a Poisson distribution; therefore, the received signal level varies randomly from symbol to symbol. Thermal noise is introduced by the receiver preamplifier, and is usually assumed to be additive white Gaussian noise. ASE is additive Gaussian noise in the optical signal that increases with the gain of the amplifiers. Although ASE is random, with direct detection the electrical signal at the receiver contains a noise times signal component; thus, the ASE noise level in the received electrical signal is signal-level-dependent. Without optical amplifiers, thermal noise is the major limitation with direct detection, while shot noise is the major limitation with coherent detection if the local oscillator power is large enough. However, with large local oscillator power, the high-intensity shot noise can also be modeled as additive white Gaussian noise. With optical amplifiers, ASE usually dominates the shot and thermal noise.

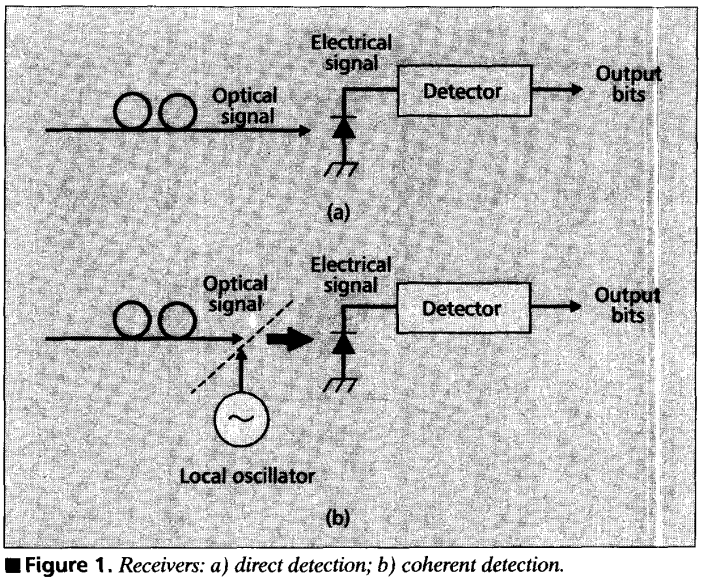

■ **Figure 1.** *Receivers: a) direct detection; b) coherent detection.*

Another source of noise is phase noise, which, as discussed above, is the random variation in phase of the transmitting laser. The main parameter of interest with phase noise is the width of the phase noise spectrum relative to the data rate. Wider spectra (or linewidths) result in more signal dispersion, as discussed above. Also, wider linewidths require wider receive filters (if all the signal energy in the received signal is to be detected), which results in higher thermal noise. However, wider linewidths (if wide enough) can have beneficial effects. In particular, with multimode lasers the distortion caused by polarization mode dispersion (PMD) is fixed, rather than time-varying as with single-frequency lasers, where the worst-case dispersion is significantly greater than the fixed value. Also, with multimode lasers the distortion due to chromatic dispersion is linear in the received electrical signal rather than nonlinear with direct detection of a single-frequency laser signal. Both these effects can make compensation of the distortion much easier, as discussed below.

There are, of course, other impairments in fiber optic systems, but we have just considered the major ones in order to study the effects of various techniques over a wide range of cases.

Techniques for Reducing Impairments

The techniques we will describe are signal processing of the received electrical signal, optical equalization, precompensation at the transmitter, line coding, various modulation techniques, and forward error correction coding.

[2] *For a study of the combined effects of chromatic and polarization dispersion in coherent lightwave systems, see [8].*

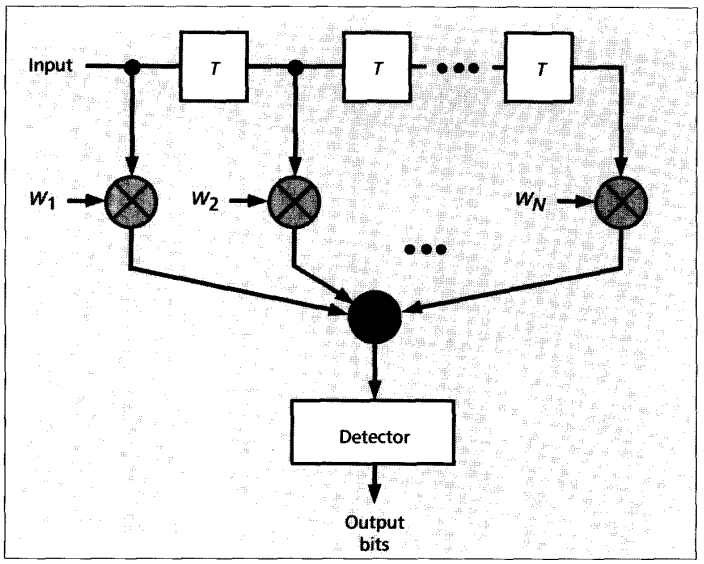

■ **Figure 2.** *Transversal filter.*

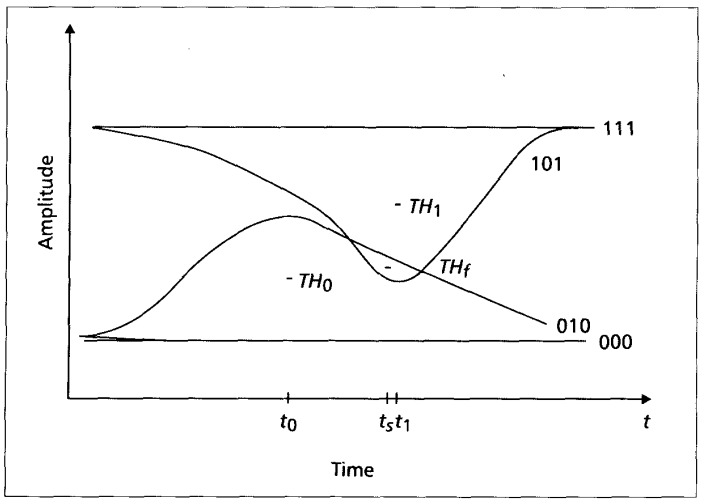

■ **Figure 3.** *Received signal eye with severe ISI.*

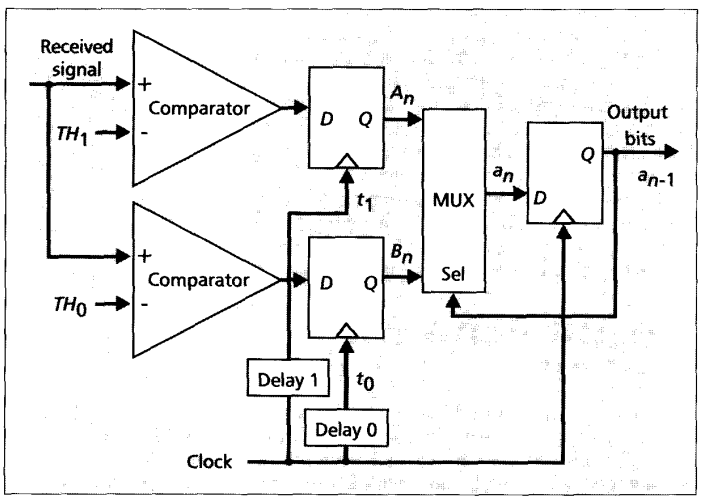

■ **Figure 4.** *One-bit nonlinear canceller using multiple detectors.*

We first consider equalization and interference cancellation techniques for the received electrical signal to reduce ISI caused by signal distortions that are introduced in lightwave systems. We discuss five different types of equalization and interference cancellation techniques: equalization by microwave waveguides and microstriplines, linear equalization by monolithic microwave integrated circuits (MMICs), linear equalization by transversal filters, nonlinear cancellation, and maximum likelihood detection (MLD).[3] These techniques are listed in order of increasing typical effectiveness against transmission impairments.

Microwave waveguides and microstriplines have a linear delay versus frequency characteristic in the center of their passband that can be used to compensate for linear delay distortion (such as chromatic dispersion when coherent detection is used). Because the microwave carrier-frequency-to-signal-bandwidth ratio is much less than the optical carrier-frequency-to-signal-bandwidth ratio, the slope of the delay is substantially higher in microwave devices, and therefore, chromatic dispersion in a long length of fiber can be eliminated by a short waveguide or microstripline [17, 18]. For example, an 8-GHz bandwidth signal transmitted at 1.55 μm over 68 km of fiber can be equalized by a waveguide with a 6 x 3 mm cross section and a length of only 15 cm [17]. Furthermore, these devices have simple structures that can easily be implemented. However, they must be built to precisely match the linear delay (i.e., the chromatic dispersion-length product of the fiber), are not adaptive, and can equalize only linear delay distortion, which makes them useful only against chromatic dispersion with coherent detection, as discussed later.

MMICs can equalize linear distortion, including chromatic dispersion with coherent detection [19], and are small in size, allowing for full integration of the receiver electronics. However, they must be carefully designed for a particular impairment and are not adaptive.

Transversal filters, on the other hand, can equalize any type of linear distortion and can easily be made adaptive (e.g., by using the least mean square—LMS—or zero-forcing algorithms). Figure 2 shows a block diagram of a transversal filter with N taps. This equalizer can be implemented in digital signal processor (DSP) software at low data rates. At high data rates, an analog tapped delay line can be used, which is relatively easy to implement (see [20] and [21], which describe equalizers at 1.1 and 8 Gb/s, respectively). The delays can be implemented by transmission lines or coaxial cables, and the weights by variable attenuators or amplifiers. The time delay between taps is typically set equal to the symbol period (i.e., a linear synchronous equalizer). The number of taps then determines the interval over which the ISI can be reduced. However, such an equalizer has a frequency response that is periodic with period $1/T$, while the signal spectrum usually extends beyond $1/T$, and aliasing (excess bandwidth) can degrade the equalized signal. This problem can be eliminated by a fractionally spaced equalizer [22], where the tap spacings are less than T ($T/2$ is adequate for most lightwave sys-

[3] *MLD refers to electrically determining the received symbols after either direct or coherent detection.*

tems). Although the transversal filter is adequate for many types of distortion, it has three disadvantages: the equalizer may enhance the noise by increasing the gain at some frequencies to flatten the system response, it may require too many taps with severe linear distortion, and it cannot compensate for nonlinear distortion.

Nonlinear cancellation (NLC) [23-25] can overcome the above limitations. To understand the principle behind NLC, consider the received signal eye with severe ISI, as shown in Fig. 3. The figure shows the signals for four 3-bit sequences (only four of eight possible sequences are shown to simplify the figure), with the center bit being the bit to be detected. Note that the eye is partially closed in both the vertical and horizontal directions. In a standard detector, the bit is detected by comparing the signal level at time t_s (the sampling time) to the threshold level TH_f (the optimum threshold).[4]

Note that the detected bits would be easily corrupted by noise or other signal distortion. However, if the previous bit is known, the detector needs to distinguish only two signals (of the four shown). Figure 3 shows that the optimum sampling times and thresholds are t_0 and TH_0, and t_1 and TH_1 for previous bits of 0 and 1, respectively. With these values, the detector is much less sensitive to noise. Such a detector can be implemented by using multiple detectors with different fixed threshold levels and sampling times.[5] The output bits are obtained by selecting the output of the detector with the threshold and sampling time that corresponds to the previously detected bits. For a one-bit NLC, two detectors and a 2:1 multiplexer are required to implement this technique, as shown in Fig. 4. In this figure, A_n and B_n are the nth output symbols of the comparators with thresholds for previous bits of 1 and 0, respectively, and a_n ($= A_n$ if $a_{n-1} = 1$ and B_n if $a_{n-1} = 0$) is the nth output bit. The NLC is all-digital and can easily be implemented on a single integrated circuit (IC) at multigigabit-per-second data rates, with the threshold levels and sampling times determined adaptively [25-29]. Note that the NLC is effective only against ISI caused by preceding bits. However, a linear equalizer (as described above) can be used in combination with the NLC to reduce ISI from bits on both sides of the detection period.

However, the optimum detection technique is MLD of a sequence of bits, rather than bit-by-bit detection. At low data rates, MLD can be implemented with all-digital signal processing, for example, using the Viterbi algorithm. At high data rates, the complex processing required by the Viterbi algorithm is impractical; the sequence length must be constrained to a small number to keep the dimensionality of the received signal space to a reasonable value, and approximations to the optimum decision boundaries in this space may be required to make hardware implementation practical [30]. In many cases, MLD can compensate for ISI much better than NLC or transversal filters. MLD can also compensate for signal distortion between multiple signals, which the other techniques cannot. To illustrate the application of MLD in such a case, consider the transmission of two on-off-keyed signals at different frequencies through an optical fiber with a peak power limitation P and direct detection at the receiver. Such a power limitation

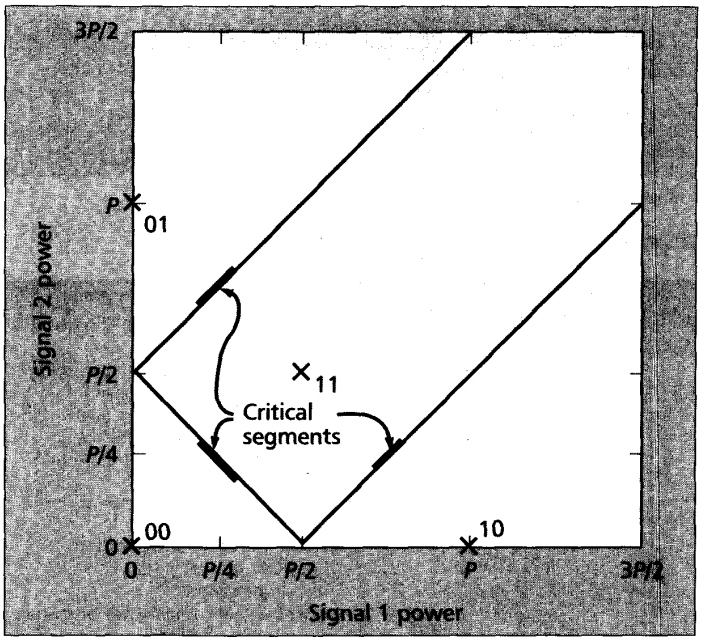

■ **Figure 5.** *Two-dimensional receive signal space with a saturated amplifier.*

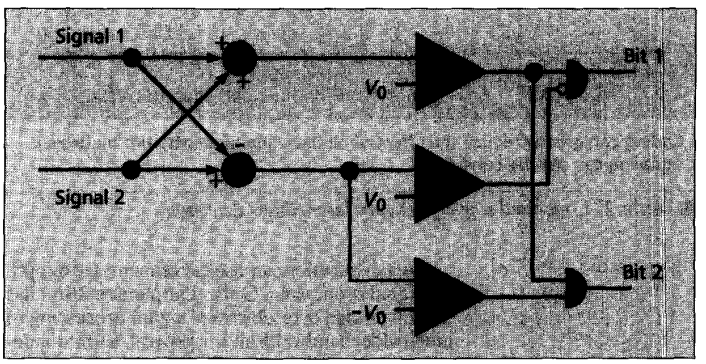

■ **Figure 6.** *Maximum likelihood detector.*

could be due to a semiconductor amplifier. Thus, when a 1 is transmitted at one frequency and a 0 at the other, the 1 has an optical power (electrical current) of P, while if 1s are transmitted at both frequencies, each signal has an optical power of $P/2$. Figure 5 shows the two-dimensional receive signal space for this case. With standard (one-dimensional) detection, the optimum decision threshold is $P/4$; that is, there is a 3-dB optical (6-dB electrical) power penalty due to the power limitation. However, since the signal coordinates are correlated, performance will be improved by joint detection of the signals. Specifically, if the two-dimensional receive signal space is used by the detector with the decision boundaries shown in Fig. 5, the optical power penalty is only 1.5 dB (3-dB electrical penalty). Figure 6 shows the implementation of such a detector, where the combiner rotates the signal space 45 degrees so that the three detectors (with $V_0 = P/2\sqrt{2}$) can determine the three decision boundaries, with digital logic used to determine the bits from the detector outputs. As with NLC, the MLD can easily be implemented on an IC even at multigigabit-per-second data rates.

[4] *This threshold can be adaptively determined to track slow changes in the optimum level [25-29]. Similarly, the optimum sampling time can also be adaptively determined [26-28].*

[5] *If the threshold is a linear function (weighted sum) of previous bits and the sampling time is fixed, then the NLC is a decision feedback equalizer.*

Impairment	Compensation technique
Receiver bandwidth limitation	Electrical transversal filter
Chromatic dispersion	Electrical transversal filter
Polarization dispersion	Electrical transversal filter
Multilevel signaling and coding can also be considered.	

■ **Table 1.** *Long-haul multimode laser (direct detection).*

Impairment	Compensation technique
Receiver bandwidth limitation	Electrical transversal filter Nonlinear cancellation
Chromatic dispersion	Dispersion-compensating fiber Maximum likelihood detection Nonlinear cancellation Precompensation
Laser nonlinearities	Nonlinear cancellation Maximum likelihood detection Line coding Precompensation Laser bias adjustment with electrical transversal filter
Polarization dispersion	Adaptive polarization control Adaptive nonlinear cancellation Adaptive electrical transversal filter
Fiber nonlinearities	Solitons Maximum likelihood detection
Coding can greatly reduce the effect of all these impairments, and multilevel signaling can also be considered	

■ **Table 2.** *Long-haul single-frequency laser (direct detection).*

Signal distortion can also be compensated by optical signal processing. Optical implementation has the advantage over electrical signal processing of much wider bandwidth and, in general, bit-rate-independent operation. In addition, it has the following advantages with chromatic and polarization mode dispersion. Since chromatic dispersion is linear in the fiber but nonlinear in the electrical signal after direct detection, optical equalization of chromatic dispersion is preferable in direct-detection systems. Optical equalizers that have been implemented include an optical transversal equalizer [31], similar to the electrical version discussed above, although maintaining the correct phase with lightwave signals is difficult. Specific properties of optical devices can also be exploited (e.g., [32], where a Fabry-Perot filter was used to compensate for chromatic dispersion). Chromatic dispersion can also be reduced by using dispersion-shifted fiber (with the dispersion minimum of the fiber at 1.55 μm rather than the standard 1.3 μm, when the transmitted signal is at 1.55 μm), or sections of fiber with dispersion opposite to that of the fiber can be added to existing standard fiber links [33-35]. Recently, fibers with high dispersion opposite to that of the fiber have been produced [34, 35]. Use of these fibers appears to be the best way to cancel chromatic dispersion in standard fibers, since short lengths of this fiber can be added within a fiber optical amplifier module to provide both gain and chromatic dispersion compensation. Polarization-dependent distortion [36], such as PMD, can also be reduced by optical signal processing. In particular, the transmit polarization can be adjusted, using an adaptive polarization controller, to the polarization that produces the least distorted signal at the receiver [37]. (Note that feedback from the receiver to the transmitter is required.) For example, with PMD alone, if the transmit polarization is kept at one of the two polarization eigenmodes of the fiber (i.e., one of the two orthogonal transmit polarizations for which there is no polarization dispersion to first order in frequency [6]), the effect of first-order polarization dispersion can be eliminated. Transmit polarization control can also greatly reduce distortion due to higher-order PMD [37-39]. Even when polarization-dependent loss (PDL) and/or fiber nonlinearities are present, transmit polarization control can reduce the received signal distortion (and improve receiver bit-error-rate) due to this polarization-dependent distortion by keeping the transmit polarization at the value for the best receiver performance. Note that while electrical signal processing at the receiver (linear equalization for first-order PMD and nonlinear processing for higher-order PMD) can also reduce the distortion due to PMD, it is not bit-rate-independent and may not be effective when PDL and fiber nonlinearities are present.

Precompensation techniques can be implemented at the transmitter to change the transmitted signal so it is received with minimal distortion. For linear distortion, the precompensation can have the same transfer function as an equalizer at the receiver (i.e., the inverse of the transfer function of the distortion). Precompensation has the advantage over equalization at the receiver in having no noise enhancement. Furthermore, since with direct detection chromatic dispersion is linear in the fiber but nonlinear after photodetection, in this case precompensation has the advantage over equalization at the receiver that linear distortion is more effectively compensated than nonlinear distortion. However, precompensation has the disadvantage in that it cannot adaptively track time-varying impairments without feedback from the receiver to the transmitter. Examples of precompensation include predistortion to reduce the effects of chirp [40, 41] and the use of solitons in long distance systems, where the transmitted signal is shaped so that the distortion due to chromatic dispersion is cancelled by distortion due to the fiber nonlinearities [42].

Line coding is another technique that can be used at the transmitter to reduce the effects of distortion. In some cases, most of the eye closure in the received signal may be due to a particular bit sequence, and reducing the effect of this sequence may require a large and complex equalizer. In this case, line coding can be used to eliminate this particular sequence in the transmitted signal pattern. The disadvantage of line coding is that it reduces the capacity of the system unless it is accompanied by an increase in the bit rate of the transmitted signal. The rate increase required may produce a further increase in signal distortion; furthermore, it is not adaptive. Line coding can be used to eliminate long strings of 1s, which are often troublesome in lightwave systems, with only a small increase in bandwidth. An example of the technique is given in [43], where it is used to reduce

the effects of chromatic dispersion.

Changes in the modulation technique from the standard on-off keying (amplitude-shift keying — ASK) can also reduce the effects of impairments. Both frequency-shift keying (FSK) and phase-shift keying (PSK) can increase the immunity of the received signal to thermal and ASE noise, and provide a signal with constant envelope to reduce laser nonlinearities (e.g., chirp) and the effect of fiber nonlinearities. However, these modulations are more sensitive to phase noise and require more complex receivers. Polarization modulation [44], on the other hand, can provide a constant envelope signal without increased phase-noise sensitivity, and may potentially double the capacity of the fiber in a given bandwidth by transmitting two orthogonally polarized signals [45, 46]. This has worked especially well with solitons, which interact much less when they are orthogonally polarized [45]. With ASK, FSK, and PSK, multilevel signaling can be used to reduce the minimum bandwidth required at a given data rate [23, 47]. This can reduce signal distortion, but multilevel signals are usually more sensitive to the distortion and may require a more complex receiver and/or transmitter.

Forward error correction coding [2, 48-51] can be used to reduce errors due to random processes (e.g., noise or mode-partition noise in single frequency lasers [52]), increasing the system margin and reducing error floors. Both block coding [2, 49, 50] and convolutional coding [51] have been investigated for use in lightwave systems, although block coding is easiest to implement at gigabit-per-second data rates. In particular, Reed-Solomon codes can lower the bit-error rate from as high as 10^{-2} to below 10^{-15} with an overhead of just a few percent (increase in data rate). This can correspond to as much as a 16-dB coding gain [49]. Coding can also be a practical alternative to equalization when the main signal distortion is caused by infrequent bit sequences. In addition, coding can be used in combination with equalization for further improvement. Note that the implementation of coding generally requires an increase in data rate (or number of levels with multilevel signaling), which can increase the uncoded error rate and reduce the coding gain. Furthermore, forward error correction coding functions best with independent errors. However, in some cases (i.e., with particular network protocols) some of the overhead bits can be used for error correction coding (without increasing the data rate or lowering the information rate of the system), and coding can be performed on lower-rate channels that are multiplexed for the higher-data-rate channel, which allows for correction of bursts of errors [2].

Applications

Let us now consider the use of the impairment-reducing techniques described above on the impairments listed earlier. Since there are numerous impairments and numerous techniques to overcome these impairments, we focus our discussion by considering three major applications: long-haul systems, local area networks, and local loops. The results of this section are summarized in Tables 1 through 5.

Below, we first consider the application of lightwave to long-haul systems, local area networks, and local loops, identify the parameters we wish to optimize in these systems, and determine which impairments must be reduced in order to achieve our goals. Then, using the guidelines above, we determine which impairment-reducing techniques are most appropriate.

Impairment	Compensation technique
Receiver bandwidth limitation	Electrical transversal filter
Chromatic dispersion	Microwave waveguide or microstripline Electrical transversal filter Dispersion-compensating fiber
Polarization dispersion	Adaptive polarization control Adaptive nonlinear cancellation Adaptive electrical transversal filter
Fiber nonlinearities	Solitons Maximum likelihood detection
Coding can greatly reduce the effect of all these impairments, and multilevel signaling can also be considered.	

■ **Table 3.** *Long-haul single-frequency laser (coherent detection, external modulation).*

Impairment	Compensation technique
Phase noise	Coding
Semiconductor amplifier nonlinearities	Gain equalization
Fiber nonlinearities	Maximum likelihood detection Forward error correction coding
Note: •100's Mbit/s per user •Many signals on common channel(impact on amplifier and fiber)	

■ **Table 4.** *Wavelength division multiplex local area network (single-frequency lasers with coherent detection to achieve high bandwidth utilization).*

Impairment	Compensation technique
Echo	Echo cancellation

■ **Table 5.** *Local loop systems.*

Long-Haul Systems

Long-haul systems are point-to-point, with distances up to 1000 km for domestic systems and up to 10,000 km for undersea systems and very high (e.g., 2.488 Gb/s) data rates. In long-haul systems, we want to maximize the data rate over these distances. Limitations are placed on the maximum data rate by chromatic and polarization dispersion, finite laser/receiver bandwidth, laser and fiber nonlinearities, and ASE noise. Because these systems are not power-limited (when optical amplifiers are used), we will not consider thermal or shot noise. We first discuss systems with multimode lasers, and then with single-frequency lasers with direct and coherent detection.

With multimode lasers in long-haul systems, the laser linewidth is much greater than the data rate. Thus, when direct detection is used at the receiver, after photodetection the (electrical) ISI due to chromatic dispersion is linear. Furthermore, for the same reason, polarization dispersion is a fixed linear distortion. Thus, distortions due to chromatic and polarization dispersion, as well as

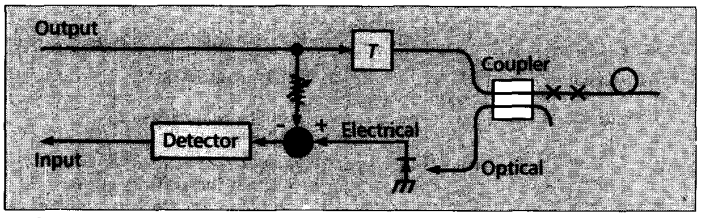

■ **Figure 7.** *Echo cancellation technique.*

laser/receiver bandwidth limitations, can be reduced by a fixed electrical transversal equalizer at the receiver [53].

With single-frequency lasers [54, 55], laser/receiver bandwidth limitations can, as above, be reduced by an electrical transversal equalizer or NLC at the receiver. The laser linewidth with single-frequency lasers can be less than the data rate (with external modulation) to several times the data rate (due to chirp with direct modulation). Thus, the signal bandwidth is much smaller than with multimode lasers, and the bit rate/distance limitation (without any impairment reducing techniques) due to chromatic dispersion is much larger; for example, at 100 km in a standard fiber with a 1.55-μm laser, the bit-rate limitation is 6 Gb/s with external modulation versus 0.05 Gb/s with a multimode laser. With coherent detection, chromatic dispersion remains a linear distortion in the received electrical signal, and therefore can be compensated by a microwave waveguide [17], (which can increase the bit-rate limitation from 6 to 100 Gb/s), microstripline [18], or MMIC [19], as well as a transversal equalizer [22, 23]. In fact, a transversal equalizer with a sufficient number of taps can completely eliminate any amount of chromatic dispersion [22]. Specifically, an N-tap equalizer can increase the bit-rate limitation (for a given distance) $\sqrt{(N-1)/2}$ -fold. However, with direct detection chromatic dispersion is a nonlinear distortion in the electrical signal at the receiver, since the signal bandwidth is not wide enough to achieve the averaging effects, as it is with a multimode laser. Therefore, to compensate for chromatic dispersion in the electrical signal at the receiver, NLC or MLD is required and is only partially effective in reducing this distortion, increasing the bit-rate limitation with external modulation only 30 percent and 60 percent, respectively [23]. Precompensation at the transmitter can also be used [40], although it has limited effectiveness. In this case, optical signal processing [31-35] (in particular, dispersion-compensating fiber [34,35]) offers practical techniques for greatly reducing the effects of chromatic dispersion, with the potential to completely eliminate these effects.

The lack of averaging effects with single-frequency lasers also causes the distortion due to polarization dispersion to vary with time, with a worst-case distortion far worse than the average distortion with multimode lasers. Specifically, for distortion in a single-frequency laser system greater than a 1 db distortion in a multimode laser system for only one half-hour/year, with a 1000-km fiber with $2\text{ps}/\sqrt{\text{km}}$ of polarization dispersion, the bit-rate limitation is 7 Gb/s with a multimode laser versus 3 Gb/s with a single-frequency laser using external modulation. However, to first order in frequency, the distortion remains a linear distortion in the electrical signal at the receiver, and therefore can be compensated by an adaptive transversal filter [20] or, even with more severe distortion, by an adaptive NLC [25]. Alternatively, as discussed earlier, the transmit polarization can be rotated to one of the two polarization eigenmodes of the fiber, such that the signal is received without distortion due to first-order polarization dispersion [37]. With either NLC or polarization control, the bit-rate limitation in the above example can be increased from 3 Gb/s to over 10 Gb/s, with further improvement possible by using both techniques. These two techniques are also effective with single-frequency lasers using direct modulation [37].

To compensate for single-frequency laser nonlinearities in combination with chromatic dispersion, a number of techniques can be used in direct detection systems. At the receiver, NLC or MLD [23, 30] can partially compensate for this impairment. In addition, line coding can be used to eliminate troublesome bit sequences [43]. Precompensation can also be used at the transmitter [40]. It is also possible to change the laser bias in such a way as to make most of the distortion in the electrical signal at the receiver a linear distortion (although the eye opening is reduced without equalization), which can then be compensated by a transversal equalizer [56]. As discussed before, dispersion-compensating fiber [34, 35] may be the best technique for greatly reducing the effects of chromatic dispersion, with the potential to completely eliminate these effects.

With fiber nonlinearities in combination with chromatic and polarization dispersion, optical signal processing [34, 35, 37] and coding [2, 49, 50, 57] can be used. In addition, solitons can be used for distortionless transmission for data rates up to at least 20 Gb/s over thousands of kilometers [42, 45].

Local Area Networks

Local area networks support large numbers of interconnected users, with multiple users transmitting signals on single or multiple fibers. The performance of the network critically depends on the media-access technique and topology of the network. However, we will only consider techniques to maximize the number of users, and the throughput per user, in a single fiber.

Because the distances in a local or metropolitan area network are on the order of tens of kilometers, neither chromatic nor polarization dispersion should be a problem. Local-area networks are, in general, power-limited rather than bandwidth-limited, with power losses primarily due to the taps for the users in a bus configuration.[6] To maximize the number of users in a given bandwidth via frequency-division multiplexing, the laser linewidth must be comparable to or less than the data rate. Thus, only single-frequency lasers will be considered. Because of the power limitation, thermal noise in direct detection and shot noise in coherent detection are impairments to be considered along with ASE noise when optical amplifiers are used. In addition, phase noise must be considered in coherent systems. Other limitations in a local area network include the distortions in semiconductor optical amplifiers (when used) and nonlinearities in the fiber. These two distortions

[6] *A star topology can be used to greatly reduce any power limitations [58]. Also, a multihop topology can be used [59] that realizes local area networks using optics in a point-to-point mode.*

can be compensated by electrical gain equalization of the optical amplifier, MLD, and coding, as in long-haul systems.

To reduce the effects of thermal, shot, ASE, and phase noise, coding can be used. Since the local area network is not bandwidth-limited, coding techniques with large overhead (such as spread spectrum) are possible. Indeed, the effect of phase noise decreases with increased symbol rate [60, 61].

Because of power limitations, PSK with coherent detection is an attractive modulation technique if the laser linewidth is much smaller than the data rate. With the laser linewidth comparable to the data rate, coherent detection [54] with PSK must be compared with direct detection of on-off-keyed signals. The effect of phase noise and wider receiver bandwidth with distortion in coherent systems must be compared to the reduced sensitivity (due to thermal noise) of direct-detection systems. Although in a power-limited system multilevel signaling is usually not useful, the effect of the distortions on multilevel signaling must be considered. However, it has been shown that M-ary FSK is not effective in increasing the spectral efficiency of local-area networks [62].

Local Loop

With local loop systems, the distance is short enough that there is little chromatic or polarization dispersion. The major impairment in such systems may be echo in duplex systems (i.e., two-way transmission on the same fiber) [63-65]. Because the transmitted signal power is much higher than the received signal power, any reflections in the fiber system (e.g., from connectors) can result in a large transmitted signal echo, relative to the received signal, into the receiver. This echo can be reduced by echo cancellation techniques, as shown in Fig. 7.[7] Here, part of the transmitted signal is subtracted from the received signal to remove the echo. However, if there are multiple echoes from different distances (i.e., different time delays), then multiple taps with different delays may be required. Note that this is a fixed impairment, and therefore, the tap weights can be adjusted manually.

Conclusions

In this article we have surveyed the major impairments in lightwave systems and discussed the signal-processing techniques that can be used to reduce these impairments. Guidelines for the use of these techniques were presented. Finally, we used these guidelines in determining the techniques with the most potential for providing improved performance in long-haul systems, local-area networks, and local loop systems. Although many of the techniques have been previously considered for these applications, few have been implemented in commercial products. Some of the most promising techniques include dispersion-compensating fibers, polarization control, NLC, and coding for reducing the effect of distortion in long-haul single-frequency-laser direct-detection systems. These are the focus of current research efforts.

Acknowledgment

This work was stimulated by discussions with D. G. Duff, B. L. Kasper, R. A. Linke, and O. Mizuhara.

References

[1] B. L. Kasper, "Equalization of Multimode Optical Fiber Systems," *Bell Sys. Tech. J.*, vol. 61, pp. 1367-88, Sept. 1982.
[2] W. D. Grover, "Forward Error Correction in Dispersion-Limited Lightwave Systems," *J. Lightwave Tech.*, vol. 6, pp. 643-54, May 1988.
[3] A. F. Elrefaie *et al.*, "Chromatic Dispersion Limitations in Coherent Lightwave Transmission Systems," *J. Lightwave Tech.*, vol. 6, p. 704, May 1988.
[4] H. Bischl and F. Derr, "Chromatic and Polarization Dispersion Limitations in Coherent Optical BPSK and QPSK Systems," *J. Opt. Commun.*, vol. 12, pp. 42-46, June 1991.
[5] R. E. Wagner and A. F. Elrefaie, "Polarization-Dispersion Limitations in Lightwave Systems," *Tech. Dig. Opt. Fiber Commun. Conf.*, New Orleans, La., p. 37, Jan. 25-28, 1988.
[6] C. D. Poole and R. E. Wagner, "Phenomenological Approach to Polarisation Dispersion in Long Single-Mode Fibres," *Elect. Lett.*, vol. 22, pp. 1029-30, Sept. 11, 1986.
[7] C. D. Poole and C. R. Giles, "Polarization-Dependent Pulse Compression and Broadening Due to Polarization Dispersion in Dispersion-Shifted Fiber," *Opt. Lett.*, vol. 13, pp. 155-57, Feb. 1988.
[8] M. Tsubokawa, M. Ohashi, and Y. Sasaki, "Waveform Degradation Due to Dispersion Effects in an Optical CPFSK System," *J. Lightwave Tech.*, vol. 8, pp. 775-79, May 1990.
[9] J. H. Winters, M. A. Santoro, and Z. Haas, "On the Experimental Measurement of PMD Effects," *Proc. SPIE OE/Fibers '92*, paper no. 1784.05, Sept. 8-11, 1992.
[10] C. D. Poole *et al.*, "Fading in Lightwave Systems Due to Polarization-Mode Dispersion," *IEEE Photonics Tech. Lett.*, vol. 3, pp. 68-70, Jan. 1991.
[11] C. De Angelis *et al.*, "Time Evolution of Polarization Mode Dispersion in Long Terrestrial Links," *J. Lightwave Tech.*, vol. 10, pp. 552-55, May 1992.
[12] A. A. M. Saleh, R. M Jobson, and T. E. Darcie, "Compensation of Nonlinearity in Semiconductor Optical Amplifiers," *Elect. Lett.*, vol. 24, no. 15, pp. 950-52, July 21, 1988.
[13] W. J. Tomlinson and R. H. Stolen, "Nonlinear Phenomena in Optical Fibers," *IEEE Commun. Mag.*, vol. 26, pp. 36-44, Apr. 1988.
[14] A. R. Chraplyvy, "Limitations on Lightwave Communications Imposed by Optical-Fiber Nonlinearities," *J. Lightwave Tech.*, vol. 9, pp. 1548-57, Oct. 1990.
[15] C. R. Giles and J. Conradi, "Laser Mode Partitioning and Mode Evolution Effects in High-Speed Fiber-Optic Transmission," *Tech. Dig. OFC '86*, paper WH5, pp. 110-11, 1986.
[16] K. Ogawa, "Analysis of Mode Partition Noise in Laser Transmission System," *IEEE J. Quantum Elect.*, vol. QE-18, pp. 849-55, May 1982.
[17] J. H. Winters, "Equalization in Coherent Lightwave Systems Using Microwave Waveguides," *IEEE J. Lightwave Tech.*, vol. 7, pp. 813-15, May 1989.
[18] N. Takachio and K. Iwashita, "Compensation of Fibre Chromatic Dispersion in Optical Heterodyne Detection," *Elect. Lett.*, pp. 108-09, Jan. 21, 1988.
[19] M. S. Chaudhry and J. J. O'Reilly, "Chromatic Dispersion Compensating in Heterodyne Optical Systems Using Monolithic Microwave Integrated Circuits," *Tech. Dig. OFC '92*, p. 179, 1992.
[20] J. H. Winters and M. A. Santoro, "Experimental Equalization of Polarization Dispersion," *IEEE Photonics Tech. Lett.*, vol. 2, pp. 591-93, Aug. 1990.
[21] B. L. Kasper *et al.*, "An APD/FET Optical Receiver Operating at 8 Gb/s," *J. Lightwave Tech.*, vol. 5, pp. 344-47, Mar. 1987.
[22] J. H. Winters, "Equalization in Coherent Lightwave Systems Using a Fractionally-Spaced Equalizer," *J. Lightwave Tech.*, vol. 8, pp. 1487-91, Oct. 1990.
[23] J. H. Winters and R. D. Gitlin, "Electrical Signal Processing Techniques in Long-Haul, Fiber-Optic Systems," *IEEE Trans. Commun.*, vol. 38, pp. 1439-53, Sept. 1990.
[24] S. Kasturia and J. H. Winters, "Techniques for High-Speed Implementation of Nonlinear Cancellation," *IEEE J. Sel. Areas in Commun.*, vol. 9, pp. 711-17, June 1991.
[25] J. H. Winters and S. Kasturia, "Adaptive Nonlinear Cancellation for High-Speed Fiber-Optic Systems," *J. Lightwave Tech.*, vol. 10, pp. 971-77, July 1992.
[26] M. Sherif and P. A. Davies, "Decision-Point Steering in Optical Fibre Communication Systems: Theory," *IEE Proc.*, vol. 136, pt. J, no. 3, pp. 169-76, June 1989.
[27] J. C. Cartledge, R. G. McKay, and M. C. Nowell, "Performance of Smart Lightwave Receivers with Linear Equalization," *J. Lightwave Tech.*, vol. 10, pp. 1105-09, Aug. 1992.
[28] M. Kawai *et al.*, "Smart Optical Receiver with Automatic Decision Threshold Setting and Retiming Phase Alignment," *J. Lightwave Tech.*, vol. 7, pp. 1634-40, 1989.
[29] B. Enning and R. S. Vodhanel, "Adaptive Quantized Feedback Equalization for FSK Heterodyne Transmission at 150 Mb/s and 1 Gb/s," *Tech. Dig. OFC '89*, paper PD23-1, 1989.
[30] J. H. Winters and S. Kasturia, "Constrained Maximum-Likelihood Detection for High-Speed Fiber-Optic Systems," *Proc. GLOBECOM '91*, vol. 3, pp. 1574-79, Dec. 2-5, 1991.
[31] K. Sasayama, M. Okuno, and K. Habara, "Coherent Optical Transversal Filter Using Silica-Based Single-Mode Waveguides," *Elect. Lett.*, vol. 25, pp. 1508-09, Oct. 26, 1989.
[32] A. H. Gnauck *et al.*, "Optical Equalization of Fiber Chromatic Dispersion in a 5-Gb/s Transmission System," *IEEE Photonics Tech. Lett.*, vol. 2, pp. 585-87, Aug. 1990.
[33] D. Marcuse, "Equalization of Dispersion in Single-Mode Fibers," *Appl. Opt.*, vol. 20, pp. 696-700, Feb. 15, 1981.
[34] C. D. Poole *et al.*, "Broadband Dispersion Compensation Using the Higher-Order Spatial-Mode in a Two-Mode Fiber," *Tech. Dig. OFC '92*, paper PD13, 1992.

Since the local-area network is not bandwidth-limited, coding techniques with large overhead (such as spread spectrum) are possible.

[7] *Note that this technique requires that the echo add linearly to the received signal. Thus, the technique works with either coherent detection or direct detection with a large laser-linewidth-to-data-rate ratio. For nonlinear echo cancellation, a random-access memory (RAM) look-up table can be used to eliminate echo [65].*

The main problem facing system designers is to determine the appropriate techniques for specific impairments, and for which systems these techniques will have the most significant impact on performance.

[35] J. M. Dugan *et al.*, "All-Optical, Fiber-Based 1550 nm Dispersion Compensation 10 Gb/s, 150 km Transmission Experiment over 1310 nm Optimized Fiber," *Tech. Dig. OFC '92*, paper PD14, 1992.

[36] C. R. Giles *et al.*, "Polarization Effects on Ultralong Distance Signal Transmission in Amplified Optical-Fiber Loops," *IEEE Photonics Tech. Lett.*, vol. 3, pp. 948-951, Oct. 1991.

[37] J. H. Winters *et al.*, "Optical Equalization of Polarization Dispersion," *Proc. SPIE OE/Fibers '92*, paper no. 1787.33, Sept. 8-11, 1992.

[38] C. D. Poole, J. A. Nagel, and J. H. Winters, "Probability Density Functions for Polarization Dispersion," *Tech. Dig. CLEO '90*, p. 312, May 21-25, 1990.

[39] C. D. Poole, J. H. Winters, and J. A. Nagel, "Dynamical Equation for Polarization Dispersion," *Opt. Lett.*, pp. 372-74, Mar. 15, 1991.

[40] T. L. Koch and R. C. Alferness, "Dispersion Compensation by Active Predistorted Signal Synthesis," *J. Lightwave Tech.*, vol. LT-3, pp. 800-805, Aug. 1985.

[41] A. H. Gnauck *et al.*, "Dispersion Penalty Reduction Using an Optical Modulator with Adjustable Chirp," *IEEE Photonics Tech. Lett.*, vol. 3, pp. 916-18, Oct. 1991.

[42] L. F. Mollenauer, S. G. Evangelides, and H. A. Haus, "Long-Distance Soliton Propagation Using Lumped Amplifiers and Dispersion Shifted Fiber," *J. Lightwave Tech.*, vol. 9, pp. 194-97, Feb. 1991.

[43] N. L. Swenson and J. M. Cioffi, "Coding Techniques to Mitigate Dispersion-Induced ISI in Optical Data Transmission," *Proc. IEEE Int'l. Conf. Commun.*, Atlanta, Ga., paper 307.5, pp. 468-72, 1990.

[44] I. Seto *et al.*, "Polarization State and Phase Noise Insensitive POLSK Phase-Diversity Homodyne System in Coherent Optical Communications," *Proc. ICC '92*, vol. 2, pp. 743-47, June 14-18, 1992.

[45] S. G. Evangelides, Jr. *et al.*, "Polarization Multiplexing with Solitons," *J. Lightwave Tech.*, vol. 10, pp. 28-35, Jan. 1992.

[46] A. S. Siddiqui, "Two-Channel Optical Fiber Transmission Using Polarization Division Multiplexing," *J. Opt. Commun.*, vol. 12, pp. 47-49, June 1991.

[47] S. Yamazaki and K. Emura, "Feasibility Study on QPSK Optical-Heterodyne Detection System," *J. Lightwave Tech.*, vol. 8, pp. 1646-53, Nov. 1990.

[48] E. R. Berlekamp, R. E. Peile, and S. P. Pope, "The Application of Error Control to Communications," *IEEE Commun. Mag.*, pp. 44-56, Apr. 1987.

[49] J.-H. Wu and J. Wu, "Performance of Reed-Solomon Codes in CPFSK Coherent Optical Communications," *J. Opt. Commun.*, vol. 13, pp. 19-22, Mar. 1992.

[50] P. M. Gabla *et al.*, "401 km, 622 Mb/s and 357 km, 2.488 Gb/s IM/DD Repeaterless Transmission Experiments Using Erbium-Doped Fiber Amplifiers and Error Correcting Code," *IEEE Photonics Tech. Lett.*, vol. 4, pp. 1148-51, Oct. 1992.

[51] D. M. Castagnozzi *et al.*, "Error Correcting Coding of a 220 Mb/s Coherent Optical Communication Channel," *Elect. Lett.*, vol. 26, pp. 1288-90, Aug. 2, 1990.

[52] R. A. Linke *et al.*, "Mode Power Partition Events in Nearly Single- Frequency Lasers," *IEEE J. Lightwave Tech.*, vol. 3, pp. 706-12, 1985.

[53] D. G. Messerschmitt, "Minimum MSE Equalization of Digital Fiber Optic Systems," *IEEE Trans. Commun.*, vol. COM-16, pp. 1110-18, July 1978.

[54] R. A. Linke and A. H. Gnauck, "High-Capacity Coherent Lightwave Systems," *J. Lightwave Tech.*, vol. 6, pp. 1750-69, Nov. 1988.

[55] T. Li and R. A. Linke, "Multigigabit-per-Second Lightwave Systems Research for Long Haul Applications," *IEEE Commun. Mag.*, vol. 26, pp. 29-35, Apr. 1988.

[56] N. L. Swenson, B. L. Shoop, and J. M Cioffi, "Precluding Nonlinear ISI in Direct Detection Long-Haul Fiber Optic Systems," *IEEE Photonics Tech. Lett.*, vol. 3, pp. 182-84, 1991.

[57] G. J. Foschini and A. A. Saleh, "Overcoming Optical Amplifier Intermodulation Distortion Using Coding in Multichannel Communications Systems," *IEEE Trans. Commun.*, vol. 38, pp. 187-91, Feb. 1990.

[58] P. S. Henry, "High-Capacity Lightwave Local Area Networks," *IEEE Commun. Mag.*, vol. 27, pp. 20-26, Oct. 1989.

[59] M. G. Hluchyj and M. J. Karol, "ShuffleNet: An Application of Generalized Perfect Shuffles to Multihop Lightwave Networks," *Proc. IEEE INFOCOM '88*, New Orleans, La., pp. 379-90, Mar. 29-31, 1988.

[60] G. J. Foschini, L. J. Greenstein, and G. Vannucci, "Noncoherent Detection of Coherent Lightwave Signals Corrupted by Phase Noise," *IEEE Trans. Commun.*, vol. COM-36, pp. 306-14, Mar. 1988.

[61] L. J. Cimini, Jr., and G. J. Foschini, "Coding of Optical On-Off-Keying Signals Impaired by Phase Noise," *IEEE Trans. Commun.*, vol. 38, pp. 1301-07, Sept. 1990.

[62] L. J. Cimini, Jr., and G. J. Foschini, "Can Multilevel Signaling Improve the Spectral Efficiency of Optical FDM Systems?" *Proc. GLOBECOM '91*, vol. 1, pp. 407-11, Dec. 2-5, 1991.

[63] P. P. Bohn and S. K. Das, "Return Loss Requirements for Optical Duplex Transmission," *J. Lightwave Tech.*, vol. LT-5, pp. 243-53, Feb. 1987.

[64] G. R. Walker, R. C. Steele, and N. G. Walker, "Effect of Interfering Echoes in a DPSK Coherent Optical Transmission System with Optical Amplifiers," *IEE Proc.*, vol. 137, pt. J, pp. 248-54, Aug. 1990.

[65] N. Holte and S. Stueflotten, "A New Digital Echo Canceler for Two-Wire Subscriber Lines," *IEEE Trans. Commun.*, vol. COM-29, pp. 1573-81, Nov. 1981.

Biographies

JACK H. WINTERS received his B.S.E.E. degree from the University of Cincinnati in 1977, and M.S. and Ph.D. degrees in electrical engineering from Ohio State University, Columbus, in 1978 and 1981, respectively. From 1973 to 1976, he was with the Communications Satellite Corporation, Washington, D.C., and from 1977 to 1981, he was with the ElectroScience Laboratory, Ohio State University, where he studied adaptive antenna arrays, and received the Ohio State University ElectroScience Laboratory's award for the outstanding dissertation of 1981. Since 1981, he has been with AT&T Bell Laboratories, Holmdel, New Jersey, where he is in the Network Systems Research Department. He has been involved in research on modulation and coding, neural networks, and applications of high-T_c superconductors in communication systems, and on adaptive signal processing for increasing the capacity and reducing signal distortion in TV, fiber optic, mobile radio, and indoor radio systems. He is currently studying adaptive techniques for long-haul and undersea lightwave systems, as well as digital mobile radio.

RICHARD D. GITLIN received the B.E.E. degree from the City College of New York in 1964, and the M.S. and D.Eng.Sc. degrees from Columbia University, in 1965 and 1969, respectively. Since 1969, he has been with AT&T Bell Laboratories, Holmdel, New Jersey. From 1969 to 1979, he did applied research and exploratory development in the field of high-speed voiceband modems, with emphasis on adaptive equalization, bandwidth-efficient modulation, echo cancellation, carrier and timing recovery, and digital signal processing. From 1979 to 1982, he supervised a group doing exploratory and advanced development in these areas. From 1982 to 1987, he was head of a department responsible for systems engineering, exploratory development, and final development of data communications equipment. He was responsible for leading the pioneering efforts that led to the V.32 product family and to the HDSL technology. From 1987 to 1992, he was head of the Network Systems Research Department, where he managed research in broadband networking, including gigabit-per-second packet switches and LANs, high-speed protocols, broadband applications, and the LuckyNet gigabit research network. Since 1992, he has been director of the Communications Systems Research Laboratory.

SANJAY KASTURIA received his B.Tech. degree in 1981 from the Indian Institute of Technology at Kanpur, India. He received his M.S. and Ph.D. degrees from Stanford University, where he was partly supported by an IBM graduate fellowship. He has worked at Magnum Microwave, Vitalink Communications, and Cylink, and is currently a member of the Network Systems Research Department at AT&T Bell Laboratories, Holmdel, New Jersey. His current research focuses on the application of high-speed electronics to diverse fields, ranging from signal processing for optical communications to wireless transceivers.