UNITED STATES PATENT AND TRADEMARK OFFICE

BEFORE THE PATENT TRIAL AND APPEAL BOARD

INFINERA CORPORATION,
Petitioner,

v.

ALEXANDER SOTO AND WALTER SOTO,
Patent Owners.

IPR2023-00834
Patent No. 9,887,795

PATENT OWNERS' PRELIMINARY RESPONSE

Table of Contents

I. Introduction ***1***

II. State of the Art: The Technology Was Discouraged, Unexplored, and Not Well-Known ***3***

A. The Technology Went Unrecognized For Eight Years **3**

B. Petitioner's Own Evidence Refutes Its Argument That M-ary Modulation Was Well-Known **4**

C. Conclusion: The Technology Was Unconventional **7**

III. Summary of the Prior Art ***8***

A. Pub. No. 2002/0167693 ("Vrazel") **8**

1. Big-Picture Summary 8
2. Description of Transmitters of Figures 5 and 6 11
3. Receiver of Figure 18 14

B. Pat. No. 7,933,341 ("Pang") **14**

IV. The Petition Fails Because the Combined References Do Not Convert the First Electrical Binary Data Signal to a First Electrical M-Ary Modulation Signal ***17***

A. Ground I: Vrazel and Pang **17**

1. Introduction 17
2. Independent Claim [1b]: Missing "*converting the first electrical binary data signal in the pluggable optical transceiver module to a first electrical m-ary modulation signal*" 18
   a. The Red Box Contains an Encoder for Encoding, Which Petitioner Admits Is Different from a Modulator for Modulation 20
3. All Claims Depending From Claim 1: Claims 2, 3, 5, 10, 13, 14, 16–21 . 23

B. Ground II: Vrazel, Pang, and Yee **24**

1. Dependent Claims 11 and 12 24

V. Prosecution History Involves Repeated Examination of One Electrical Reference Combined with a Form Factor Reference ***24***

A. App. 12/512,968 (Patent 9,337,948) File History **24**

B. App. 15/095,137 (Pat. 9,887,795) File History **25**

C. App. 15/884,351 (Pat. 10,263,723) File History 26

D. App. 16/297,610 (Pat. 10,771,181 Patent) File History 26

E. The Board Denied Institution of Previous IPR Petitions 27

F. Summary of Related Family and Considered Combinations 30

VI. The Board Should Deny Institution Under Section 325(d) 33

A. *Becton, Dickinson* Factors (a)-(d) Support Denial Because the Petition Reargues the Extensively-Examined Combination of an Electrical Reference With a Form Factor Reference 34

1. The Examiners and Board Both Extensively Considered the Electrical Reference Plus Form Factor Reference Argument 35

2. The USPTO Already Considered Chip-Based References Like Raghavan, Aronson, and Agazzi '997 37

3. The Pang Reference is Similar to References Already Examined for Form Factors 40

4. Petitioner Argues the Incorrect Comparisons 41

B. *Becton, Dickinson* Factor (e) Supports Denial Because the USPTO Made No Errors During Prosecution or IPR 42

1. The USPTO Knew About Pluggable Form Factors 42

2. The USPTO Knew About Signal Processing and Modulation 44

3. Petitioner's Swapping the Labels of "Primary" and "Secondary" Does Not Create Error by the USPTO 46

C. *Beckton, Dickinson* Factor (f) Weighs Against Institution Because the Petition Has No New Evidence or Facts Warranting Reconsideration 47

D. Conclusion: Institution Should Be Denied Under *Advanced Bionics* 47

VII. The Board Should Deny Institution Under Fintiv 47

VIII. Conclusion: The Board Should Not Institute the Petition 54

Table of Authorities

Cases

Advanced Bionics, LLC v. Med-El Elektromedizinische Geräte GmbH,
IPR2019-01469, Paper 6 (PTAB Feb. 6, 2020) 33, 34, 47

Becton, Dickinson & Co. v. B. Braun Melsungen AG,
IPR2017-01586, Paper 8 (PTAB Dec. 15, 2017) ..... passim

Commscope Tech. LLC v. Dali Wireless, Inc.,
IPR2022-01242, Paper 23 (PTAB Feb. 27, 2023) 48

II-VI, Inc. v. Alexander Soto,
IPR2021-01358, Paper 1 (PTAB Aug. 6, 2021) 27

II-VI, Inc. v. Alexander Soto,
IPR2021-01358, Paper 10 (PTAB. Feb. 15, 2022) ..... passim

II-VI, Inc. v. Alexander Soto,
IPR2021-01359, Paper 10 (PTAB Feb. 15, 2022) 31, 32

II-VI, Inc. v. Alexander Soto,
IPR2021-01361, Paper 10 (PTAB Feb. 15, 2022) 31, 32

Infinera Corp. v. Alexander Soto,
IPR2023-00834, Paper 2 (PTAB Apr. 14, 2023) 33

Infinera Corp. v. Alexander Soto,
IPR2023-00835, Paper 2 (PTAB Apr. 14, 2023) 33

Infinera Corp. v. Alexander Soto,
IPR2023-00838, Paper 2 (PTAB Apr. 14, 2023) 33

Nokia of Am. Corp. v. Alexander Soto,
IPR2023-00680, Paper 1 (PTAB Mar. 15, 2023) 32

Nokia of Am. Corp. v. Alexander Soto,
IPR2023-00681, Paper 1 (PTAB Mar. 15, 2023) 32

Nokia of Am. Corp. v. Alexander Soto,
IPR2023-00682, Paper 1 (PTAB Mar. 15, 2023) 32, 33

Sotera Wireless, Inc. v. Masimo Corp.,
IPR2020-01019, Paper 12 (PTAB Dec. 1, 2020) 50, 54

Spectrum Solutions LLC v. Longhorn Vaccines & Diagnostics, LLC,
IPR2021-00860, Paper 107 (PTAB May 3, 2023) 54

Statutes

35 U.S.C. § 315(e)(2) 52

35 U.S.C. § 325(d) ..... passim
37 C.F.R. § 24.10 17

Constitutional Provisions

U.S. CONST. art. 1, § 8 55

Patent Owners' Exhibit List

Exhibit	Description
2001	Public file history of application 11/772,187
2002	Sheldon Walkin & Jan Conradi, *Multilevel signaling for increasing the reach of 10 Gb/s lightwave systems*, 17 J. OF LIGHTWAVE TECHNOLOGY, No. 11, 2235 (Nov. 1999)
2003	U.S. Patent Pub. No. 2007/0031153 to Aronson ("Aronson")
2004	Public file history of application 12/512,968 (Pat. 9,337,948)
2005	U.S. Patent Pub. No. 2001/0035997 to Agazzi ("Agazzi '997")
2006	Email chain between Infinera's counsel and Patent Owners' counsel regarding discovery
2007	Public file history of application 16/297,610 (Pat. 10,771,181)
2008	Public file history of application 15/884,351 (Pat. 10,263,723)

I. Introduction

The Board should decline to institute the Petition because it lacks merit and merely rehashes an argument that the USPTO has repeatedly addressed (one electrical signal processing reference plus one pluggable form factor reference). Instituting the Petition requires the Board to make the implausible findings that converting a 4-bit input word into a 4-bit output word somehow increases the number of bits, and that an "encoder" is a "modulator," despite the available evidence supporting no such thing.

Alexander and Walter Soto invented a novel pluggable m-ary optical transceiver. The challenged Patent 9,887,795 ("'795 Patent") discloses and claims an optical transceiver module that includes extensive signal processing functionality packaged into a portable pluggable form factor that fits in a person's hand. The '795 Patent addresses deficiencies in optical transceivers at the time of the invention. Existing optical transceivers with complex signal processing capabilities were large, bulky, and expensive. For example, the extensively-examined Brede reference[1] describes a headend system made up of multiple bulky components on line cards mounted on racks. In the industry, line cards are often referred to as "pizza boxes" because of their shape and size, and multiple line cards are installed into even larger racks or chassis that could take multiple people to lift and move. The inventors

[1] *See* Section V(F) below (discussing references considered).

worked to determine the important features that should be included in a pluggable optical transceiver module, while also balancing other factors such as power, heat, and size. The result was a novel and nonobvious pluggable module with m-ary signal processing capabilities, as claimed in the ’795 Patent.

From the earliest family examination in 2004 to allowance, multiple examiners searched for a pluggable optical transceiver with complex m-ary signal processing capabilities like those in the claims. *E.g.*, Ex. 2001 at 9–14 (Examiner Phan searching similar claims); Ex. 2004 at 116–21 (Examiner Bello searching similar claims). They found none. The USPTO repeatedly considered combinations of one reference describing a traditional line card or optical system (*e.g.*, Brede) with a second reference describing a simple pluggable module (such as the small form pluggable “SFP” module). The inventors showed the examiners that such a combination was not obvious, and the examiners recognized the patentability of the claims over such arguments. In a previous IPR petition, the Board rejected similar grounds that asserted combinations of references describing traditional m-ary optical systems with other references that purported to disclose simple pluggable modules.

Infinera Corporation (“Petitioner”) follows the same approach that the examiners previously rejected and that the Board previously rejected. Petitioner does not assert that anyone else invented a pluggable optical transceiver with m-ary modulation capabilities like the one claimed in the ’795 Patent. Petitioner presents

no references that purportedly anticipate any of the claims of the ’795 Patent. Instead, Petitioner brings the same type of obviousness grounds that the USPTO examiners and Board previously rejected. The Board should reject these repetitive arguments again.

Besides being repetitive, the Petition should also be rejected for failure on the merits. Grounds I and II should fail because the cited references fail to teach “converting the first electrical binary data signal in the pluggable optical transceiver module to a first electrical m-ary modulation signal.”

II. State of the Art: The Technology Was Discouraged, Unexplored, and Not Well-Known

A. The Technology Went Unrecognized For Eight Years

As stated in the Petition, the GBIC pluggable module standard was published in 1995—8 years before the uncontested priority year of 2003. Paper 2 (“Petition”) at 7–8.

What Petitioner’s summary of the state of the art fails to mention is that, despite the GBIC publication in 1995, Petitioner found no printed publication in **the next 8 years** describing the novel, inventive leap made by Patent Owners (implementing m-ary signal processing capabilities in a pluggable module). Indeed, Petitioner found no publication in that 8-year span that even imagines the idea of m-ary signal processing capabilities in a pluggable module. Petitioner cannot explain this gap, and Petitioner’s own evidence discussed in the next section demonstrates

that the industry at the time was simply not considering such functionality in optical networking, let alone in a pluggable module.

Petitioner's Exhibit 1011, titled "Evolution of the Pluggable Module," shows many pictures of pluggable devices labeled with dates before 2003. Petitioner has not shown that any of these pluggable devices come anywhere close to having the type of complex m-ary signal processing capabilities of the claimed invention. Petitioner offers no data sheets or advertisements showing that any pluggable module from 1995 to 2003 performed the type of complex, m-ary signal processing described in the challenged patent.

B. Petitioner's Own Evidence Refutes Its Argument That M-ary Modulation Was Well-Known

The Petition purports to emphasize that m-ary modulation was "well known" for optical transmitters. Petition at 8. However, Petitioner's own evidence is contrary to this argument. Petitioner's argument is based on its expert's reliance on a 2002 textbook (Ex. 1003 ¶ 41, Ex. 1014 at 876). However, the 2002 textbook does not say that m-ary modulation was "well known." To the contrary, the textbook states that m-ary modulation methods had merely "received **some attention** for their potential application to optical communications" and cites to the paper *Multilevel signaling for increasing the reach of 10 Gb/s lightwave systems*. Ex. 1014 at 865 (emphasis added). "Some attention" is a far cry from "well known." The *Multilevel signaling* paper demonstrates that even "some attention" is an exaggeration.

The *Multilevel signaling* paper provides simulated results of potential m-ary modulation. Ex. 2002 at § VI. The simulated results show that the "baseline sensitivity … is **significantly degraded** for these signals" and "would require about 3.3 dB more optical power than a binary signal." *Id.* at 2241 (emphasis added). When used with a preamplifier, this "**increases the penalty substantially** to about 8 dB assuming equally spaced levels, and to about 5 dB when the levels are optimally spaced." *Id.* (emphasis added). The paper concluded:

> Obtaining **optimal level spacing may not be practical** in an *M*-ary signal because **the temporal width of the lowest eye is reduced significantly** when the *M*-ary signal is bandlimited at the transceiver and/or receiver. Furthermore, a very small vertical opening in the bottom eye **makes it more susceptible to chromatic dispersion**; hence, level spacing that is optimal in the absence of dispersion is not likely optimal when dispersion is included.

Id. (emphasis added). Petitioner's 2002 textbook further elaborated on the view that m-ary modulation techniques were considered undesirable at the time:

> optical power levels would have a squared (0, 1, 4, 9) relationship—**clearly not desirable**.
>
> . . . While a beneficial factor of two is achievable, this does not translate quite so simply into an increase in the dispersion-limited transmission distance due to the fact that we now have a four-level power signal or eye, **which inevitably suffers additional eye closure** due to the added levels, as illustrated in Fig. 16.6. Although shown to provide additional

> dispersion immunity for a single-channel 10-GB/s system of NDSF [10], the additional optical power that this requires is such that in a multichannel DWDM configuration[,] **excessive penalties due to fiber nonlinearities are likely to preclude the use of M-ary ASK signaling** in long-haul DWDM systems. The potential application of M-ary ASK to transmission over dispersion-limited multimode fiber (such as for 10-GB/s Ethernet) is a potential, but to the author's knowledge, **an untried application**."

Ex. 1014 at 877 (emphasis added). The 2002 textbook goes further to suggest that m-ary modulation is "not practical" in optical networking:

> This requires significantly greater optical power. . . . Clearly, this large increase in launched power **precludes the use of M-ary ASK** for multichannel DWDM long-haul systems as, at the power levels shown, **huge interchannel nonlinearly problems can be expected to occur** due to FWM and XPM. Some degradation in the single-channel case can also be expected due to self-phase modulation (SPM).
>
> Thus, while **not practical for long-distance transmission**, an **unexplored possible application** of M-ary ASK is for moderate distance extension of transmission distances…"

Id. at 887 (emphasis added).

Thus, based on Petitioner's own evidence, the use of m-ary signal modulation was certainly not "well known" for optical transmitters, and the additional limitations of pluggable form factors would have made consideration of m-ary signal

modulation in pluggable devices even less likely.

C. Conclusion: The Technology Was Unconventional

The state of the art is summarized as follows:

1. Despite pluggable modules being around for many years, these pluggable modules lacked complex, m-ary signal processing capabilities. Petitioner found no reference describing any m-ary modulation capabilities in a pluggable optical transceiver.

2. M-ary modulation in optical signals had only just begun to receive attention at the time of the invention, and that attention suggested that m-ary modulation in optical networking had "clearly not desirable" power requirements, "inevitably suffers additional eye closure," and expected "huge interchannel nonlinearity problems." Ex. 1014 at 877, 887. The evidence shows that a POSITA would have believed that "excessive penalties due to fiber nonlinearities are likely to preclude the use of M-ary ASK signaling," except for a few cases that remained "untried" and "unexplored." *Id.* at 877, 887.

Alexander and Walter Soto's invention resulted from the use of technology that, according to Petitioner's own evidence, was considered undesirable and not useful at the time.

III. Summary of the Prior Art

A. Pub. No. 2002/0167693 ("Vrazel")

Vrazel describes a traditional fiber optic data transmission system. Ex. 1006. Vrazel makes no mention of pluggable modules, nor does Petitioner rely on this reference for pluggable modules. Petitioner relies on Vrazel Figures 5 and 6 for the transmitter and on Figure 18 for the receiver. Paper 2 ("Petition") at 22–46.

1. Big-Picture Summary

Vrazel Figure 2 shows the big picture "m-by-n channel WDM long-haul fiber optic link constructed in accordance with an exemplary embodiment." Ex. 1006 at [0015]. Figure 2 of Vrazel is shown below:

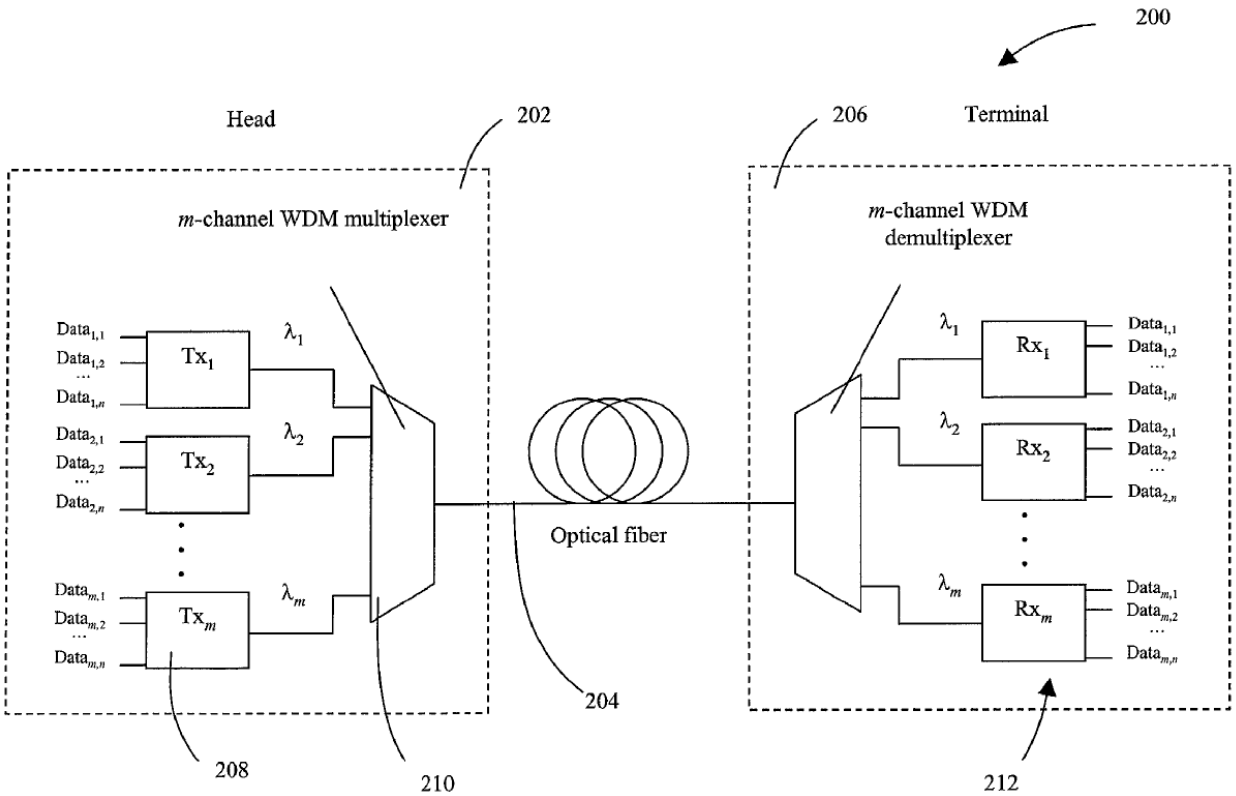

Fig. 2

"WDM" stands for wavelength division multiplexing, which is not a form of m-ary modulation.

The left side, labeled as the "Head," contains *m* number of n-channel transmitters, designated $Tx_{1\text{-}m}$. *Id.* at [0040]. The "Head" represents a large circuit board (or "line card" or "pizza box") big enough to support many optical transmitters numbered "1" to "*m*" in parallel. None of these transmitters are pluggable modules, and the Petition relies only on Wei, not Vrazel, for teaching pluggable modules. Each transmitter generates an output on a different wavelength $\lambda_{1\text{-}m}$, which are collected by the m-channel WDM multiplexer. *Id.*

The Head connects through an optical fiber to the "Terminal" on the right.

The Terminal first receives the optical signal at an m-channel WDM demultiplexer with *m* outputs that connect to *m* number of n-channel receivers (Rx_{1-m}). *Id.* Like the Head, the Terminal represents a large board or line card big enough to use multiple receivers in parallel. "Each receiver includes a photodetector and circuitry required to operate the detector and to amplify the detected signal in order to output the original electrical data stream." *Id.* These receivers are also not pluggable modules.

Compared to the prior art system of Figure 1, the system of Vrazel Figure 2 increases system throughput "without replacing the optical fiber network or the interface components connected to the transmitters 208 and to the receivers 212." *Id.* at [0041]. In other words, to implement Vrazel's techniques, a POSITA need not replace the optical fiber or other **optical** interface components (lasers, lenses, and the like). Naturally, this leads Vrazel to state that its technique "adds little or no complexity to the **optical** components of the channel transmitter and receiver," and "without requiring a modification of the **optical** fiber plants." *Id.* at [0011], [0039] (emphasis added). Vrazel sought to avoid the typically high costs of upgrading **optical** components. *Id.* at [0007]. Thus, Vrazel believed that "there is a need for a method of increasing a channel data rate in a fiber optics communication link that does not require replacing an existing **optical** fiber plant or necessitate a change in

the expensive **optical** components." *Id.* at [0009] (emphasis added).

Vrazel's complexities lie in its complex **electrical** components, not its optics. Any application of Vrazel's electrical circuit introduces significant electrical complexity. *See* Section II(B) above (explaining some electrical complexities of m-ary signal processing).

2. Description of Transmitters of Figures 5 and 6

"Figure 5 is a block diagram depicting multilevel ASK optical transmitter 500," referring to one of the many transmitters in the Head from Figure 1. Ex. 1006 at [0050]. Figure 5 is reproduced below:

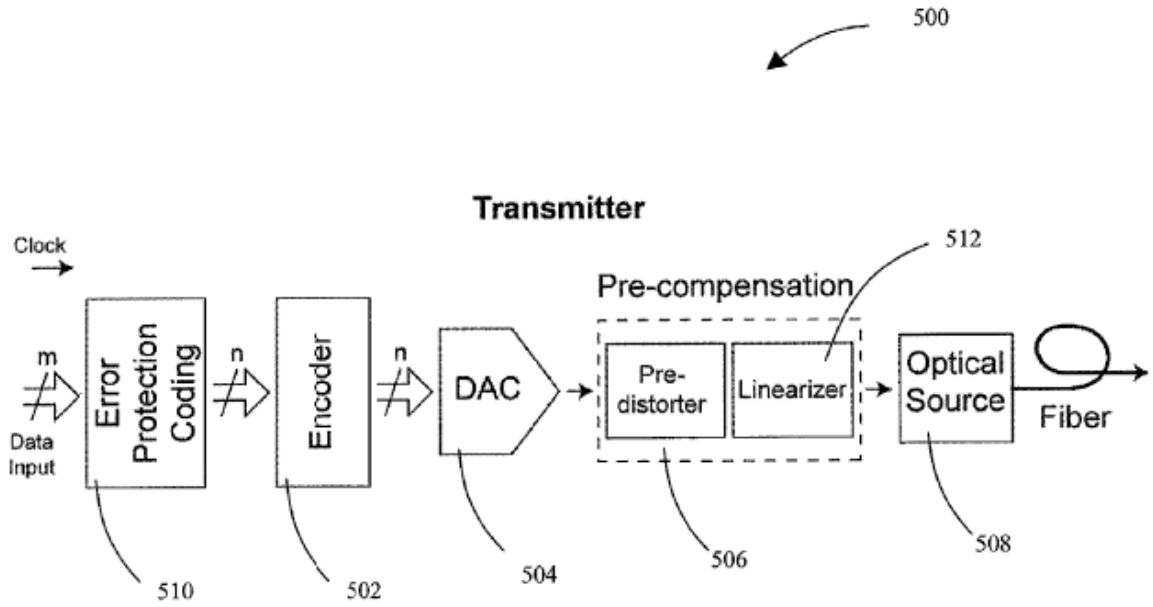

Id. at Fig. 5. An m-bit word is received at the left as data input. *Id.* at [0051]. Then, an error protection coding ("EPC") module "maps the m-bit word … into an n-bit word where n≥m." *Id.* Then, an "encoder 502 converts the protected n-bit word into

a second 'error-resistant' n-bit word." *Id.* This can be done, for example, by using Q-Gray code encoding (which is not an m-ary modulation technique). *Id.* Paragraph [0051] and Table 1 describe how to map a 4-bit conventional binary word into a 4-bit Q-Gray code cord. *Id.* Thus, the encoder takes an n-bit word input and generates an n-bit word output. *Id.* This process is referred to as "encoding," not "modulation," and it does not increase the number of bits per symbol. *Id.* at 50 ("encoding/transmission/decoding").

Then, "the encoded n-channels are input to a DAC 504." *Id.* at [0051]. "DAC" stands for digital-to-analog converter. The DAC takes the n-bit word digital signal and converts it into an analog electrical signal in accordance with Table 2 in Vrazel. *Id.* at [0053]. According to the Petition, modulation occurs **after** the DAC block because the Petition argues that the **output** of the DAC "can be used to modulate the optical source" later. *See* Petition at 30.

Then, an optional pre-compensation circuit includes pre-distorter 506 and linearizer 512 before the optical source. Ex. 1006. at Fig. 5. Pre-distorter 506 "can help compensate for non-ideal link frequency response and for some classes of link non-linearities." *Id.* at [0054]. Vrazel shows its pre-distortion circuit in Figure 10. Ex. 1006 at [0070]. Here, "the amplitude of the symbol to be transmitted can be modified based on the amplitudes of preceding and succeeding symbols to ensure that the receiver and decoder are able to accurately detect the proper symbol

amplitude after transmission." *Id.* "Thus, the circuit 1000 shown in FIG. 10 will transmit the symbol $S'_n=\Re+S_n$ for each symbol in the data stream. In this way, the symbol S_n is predistorted by the amount $\Re$ to ensure that S_n is accurately received after transmission." *Id.* at [0077].

The transmitter of Figure 6 is similar to the transmitter of Figure 5, except that the pre-distorter is repositioned between the Encoder and the DAC, thus in the digital domain (before the digital-to-analog conversion) as opposed to after it. The predistortion amount "+k" is added to the original signal as "n" (the original signal). *Id.* at [0077] (effectively referring to this same expression as $S_n + \Re$).

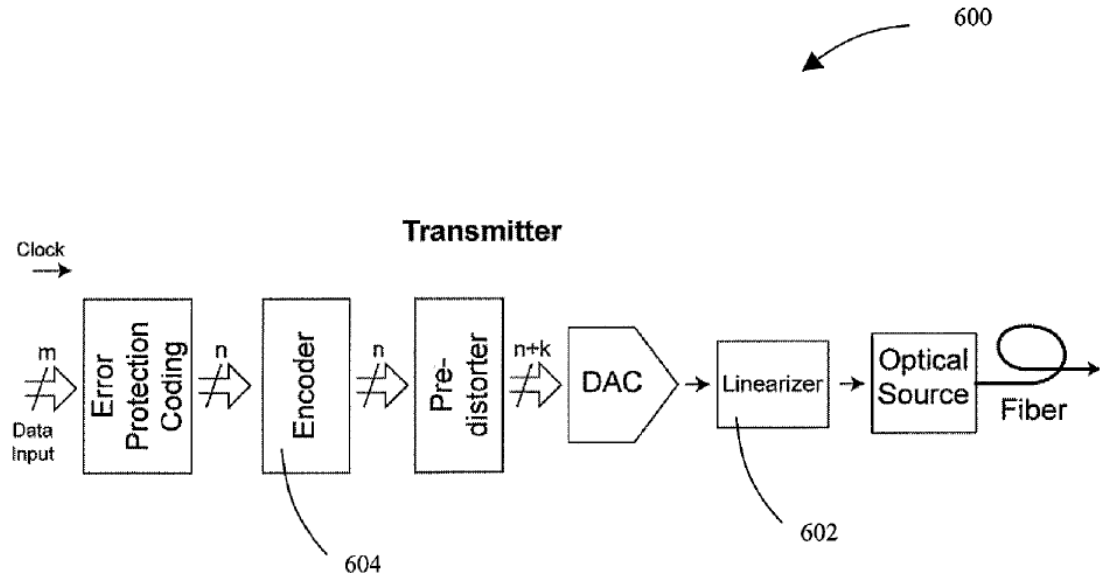

Ex. 1006 at Fig. 6.

The linearizer helps linearize the optical source. *Id.* at [0069].

Finally, Figures 5 and 6 end with an optical source. At the optical source, a

laser diode emits an optical signal into the fiber.

As best understood, Petitioner interprets the "error protection coding module, an encoder, a Digital to Analog Converter, and pre-compensation circuitry" of Figures 5 and 6 as "transmit electronics [that] 'can be integrated into one circuit or multichip module.'" Petition at 17. This collection of components proposed by Petitioner omits Vrazel's optical source from Petitioner's proposed integrated circuit.

3. Receiver of Figure 18

Patent Owners disagree with Petitioner's characterization of how Vrazel's receiver of Figure 18 operates and what the components do. Nonetheless, the Board need not resolve the disputes about the receiver for purposes of evaluating institution. Patent Owners will correct Petitioner's summary of the receiver in the Patent Owners' Response, if necessary.

As best understood, Petitioner interprets the "transimpedance amplifier, distortion post-compression circuits, an Analog to Digital Converter, a decoder, and an error protection decoding module" of Figure 18 as "receive electronics [that] 'can be integrated in one circuit or multi-chip module.'" Petition at 17–18.

B. Pat. No. 7,933,341 ("Pang")

Pang teaches a basic fiber optic transceiver module in an SFP form factor, a type of pluggable module. Ex. 1007. Pang's basic system lacks the m-ary and other

complex signal processing capability recited in the claims, and Petitioner does not rely on Pang for internal electrical signal processing components or the claimed m-ary signal processing. Indeed, the Petition admits that "Pang relates primarily to the physical arrangement of components in a pluggable optical transceiver, and does not provide a detailed description of the operation of the electrical components and techniques used in its transceiver." Petition at 14.

Annotated figure 17A shows the arrangement of components:

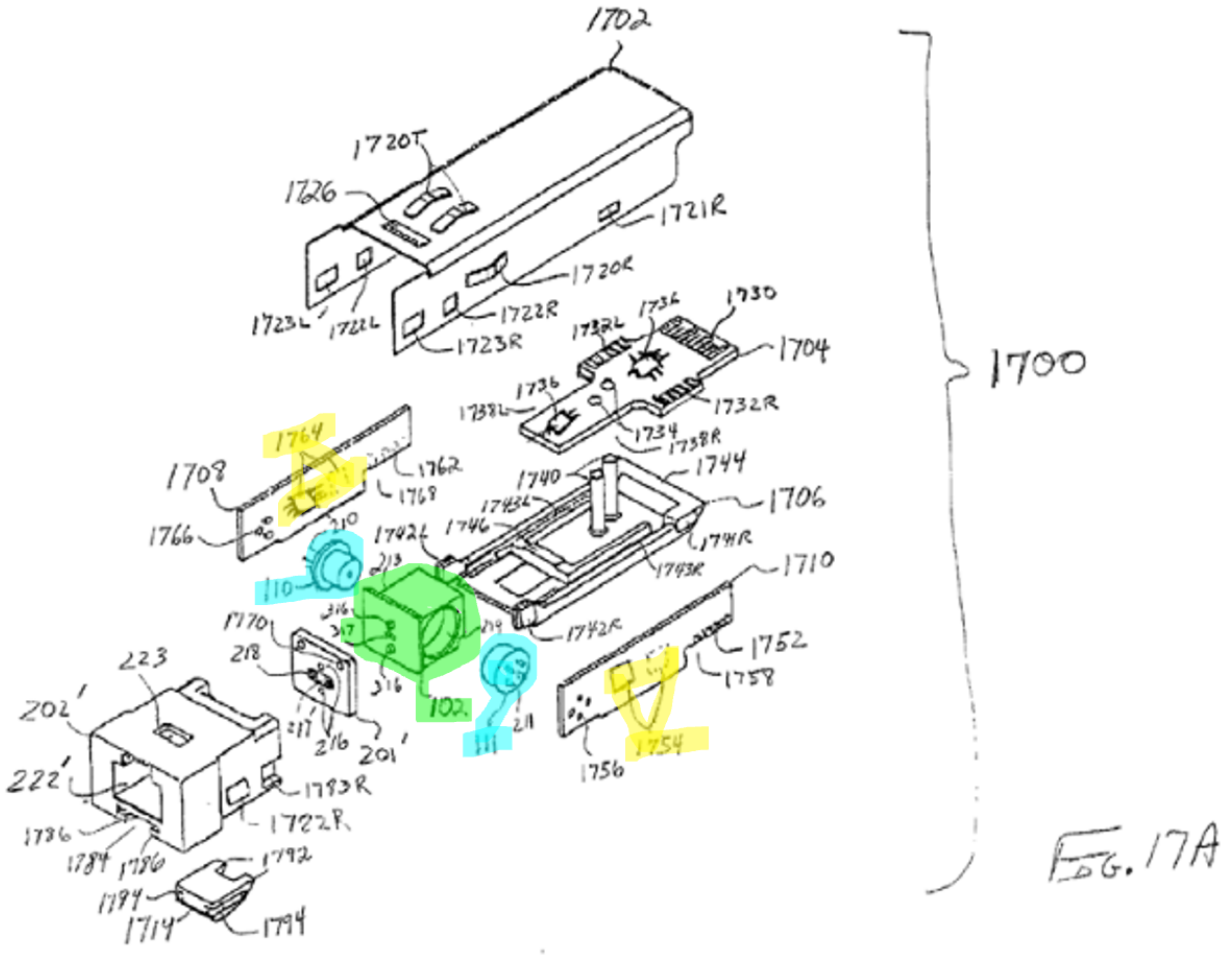

Ex. 1007 at Fig. 17A (highlighted). The illustrated physical arrangement has two

notable aspects.

First, the "optical block 102" (green) has openings that hold the light transmitter 110 and light receiver 111 (blue). Ex. 1007 at [0066], [0069], [0071]. Pang's "light transmitter 110" and "light receiver 111" refer to optoelectronic devices that "convert or transduce light or photons into an electrical signal." *Id.* At [0066]. In other words, the "light transmitter 110" includes the optical source or laser of the transmitter, and the "light receiver 111" is the optical photodetector of the receiver. Petitioner relies on Pang's light transmitter 110 in its final combination. Petition at 20, 31.

Second, a transmit PCB 1708 on the left includes integrated circuits 1764 (yellow) for electrical transmitter components, while a receive PCB 1710 on the right includes integrated circuits 1754 for electrical receiver components. *Id.* At [0159]–[0160]. Pang discloses a "laser driver" in the transmitter integrated circuit in the transmit PCB. *Id.* At [0067]; Petition at 11, 18, 19, 32. Petitioner relies on Pang's laser driver in its final combination. *Id*. Otherwise, Pang does not describe these integrated circuits as capable of performing any type of m-ary modulation or advanced signal processing. *See id.* At 27–31 (relying instead of Vrazel).

IV. The Petition Fails Because the Combined References Do Not Convert the First Electrical Binary Data Signal to a First Electrical M-Ary Modulation Signal

A. Ground I: Vrazel and Pang

1. Introduction

The Board should deny institution because Petition is unlikely to succeed on the merits. *See* 37 C.F.R. § 24.10 (requiring likelihood of success on the merits).

The proposed combination lacks multiple claim elements, but this preliminary response only focuses on a few issues. Claim element [1b] recites, "*converting the first electrical binary data signal in the pluggable optical transceiver module to a first electrical m-ary modulation signal*." The Petition relies exclusively on Vrazel (not on Pang) for this element, but fails to show disclosure of this element in Vrazel.

In the general context of claim 1, the Petition relies on Vrazel Figures 5, 6 and 10 for the transmitter. Petition at 27–34. For claim [1a], Petitioner argues that Vrazel's Error Protection Coding block outputs the claimed "first electrical binary data signal." Petition at 26. This preliminary response assumes Petitioner's argument for claim [1a] without agreeing with it.

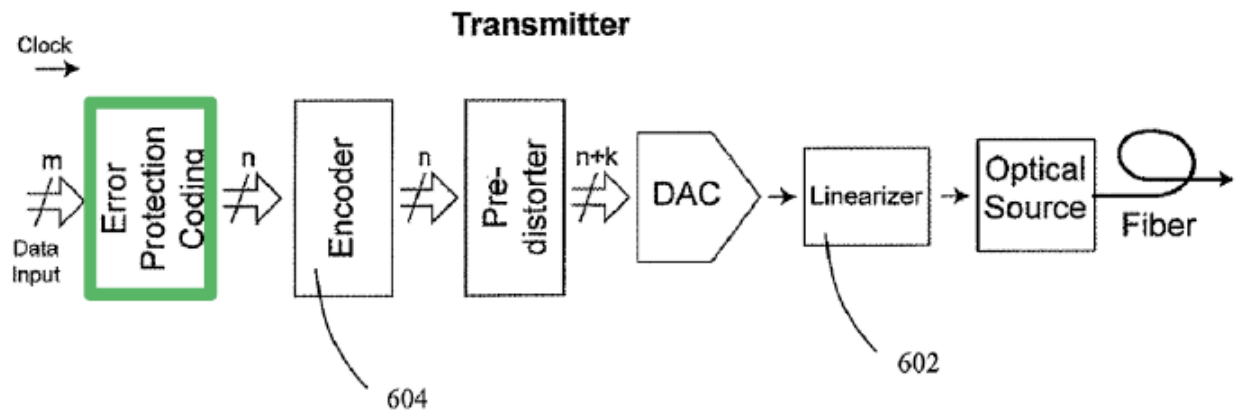

Id. at 26 (annotated by Petitioner).

2. Independent Claim [1b]: Missing "*converting the first electrical binary data signal in the pluggable optical transceiver module to a first electrical m-ary modulation signal*"

Element [1b] recites "*converting the first electrical binary data signal in the pluggable optical transceiver module to a first electrical* ***m-ary modulation signal***." (emphasis added). As emphasized, the conversion causes the binary signal to become an "m-ary modulation" signal. This happens, for example, by using a modulator block to perform m-ary modulation. Ex. 1001 at Figs. 3, 4, 6A, 6B, 7 (showing "MOD" block), 10:11–23. Petitioner first argues that this conversion is done by the encoder block of Vrazel Figure 5:

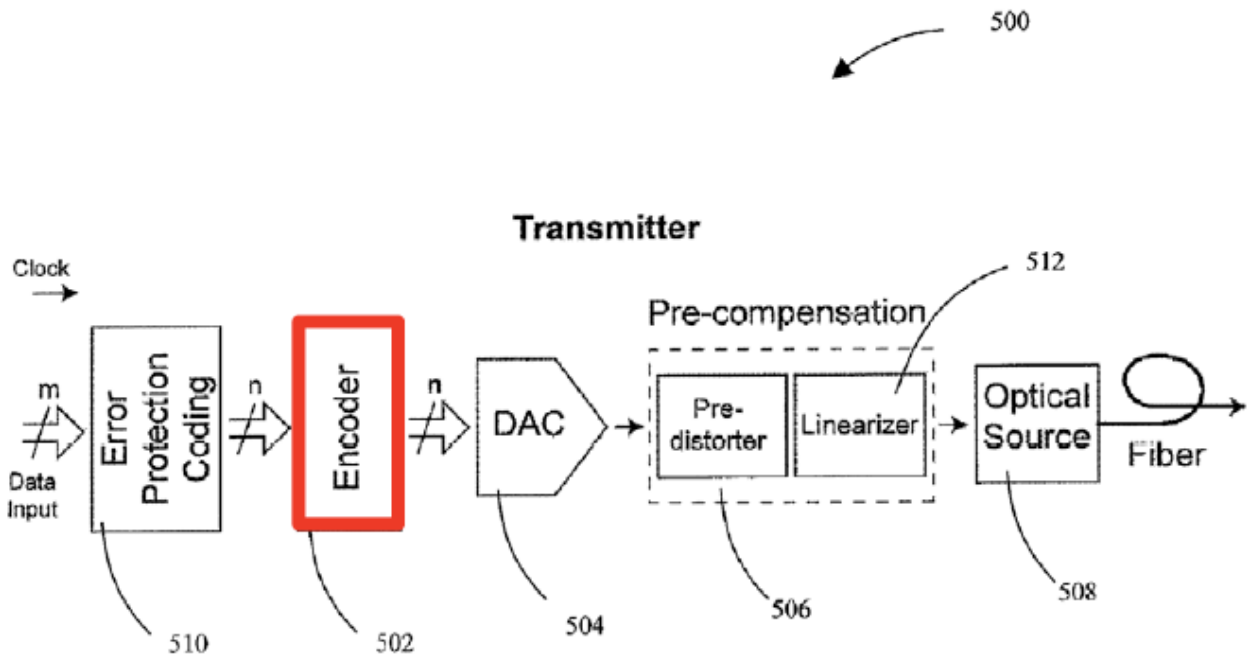

Petition at 28. Alternatively, Petitioner relies on the encoder plus the pre-distorter of Vrazel Figure 6, again drawing a red box to show the alternative purported modulator:

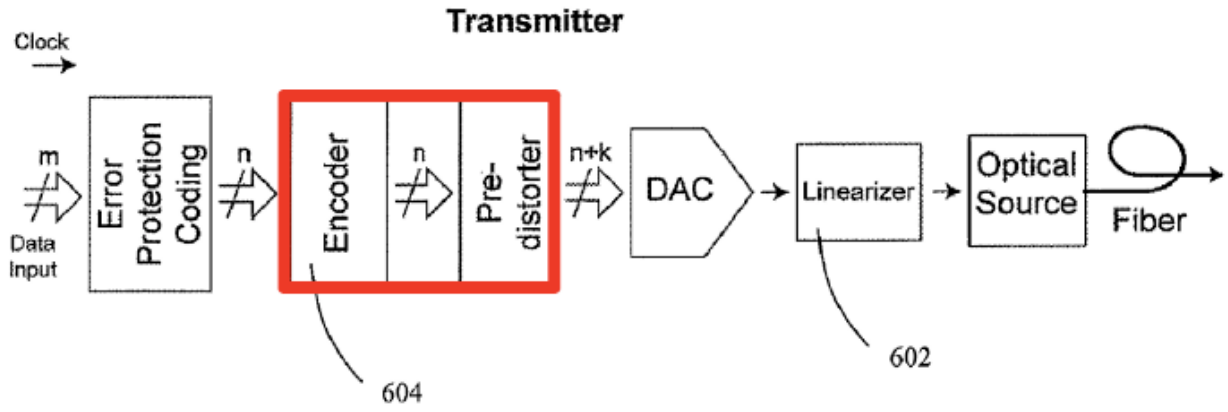

Id. at 30.

Petitioner's argument is unlikely to succeed because the Petitioner and its expert agree that encoding and modulation are different functionalities. Petitioner

has therefore failed to show a reasonable likelihood that an encoder or an encoder and pre-distorter are also modulators.

a. The Red Box Contains an Encoder for Encoding, Which Petitioner Admits Is Different from a Modulator for Modulation

Petitioner has failed to show a modulator in either of its red boxes. Neither the "encoder" nor the "pre-distorter" is called a modulator in the specification. Ex. 1006 at [0050]–[0056], [0069]–[0081]. Neither the "encoder" nor the "pre-distorter" is described as converting anything into a "modulation signal" as claimed. *Id.*

Petitioner's expert admits that encoding and modulation are separate and distinct techniques in the art. Ex. 1003 at 18–19; *see also* Petition at 9–10 (repeating identical language). According to him, encoding techniques include FEC, LDPC, Reed-Solomon codes, Turbo Codes, and convolutional codes. Ex. 1003 at 19; Petition at 9–10 (repeating identical language). On the other hand, modulation uses techniques like QAM (quadrature amplitude modulation), QPSK (quadrature phase shift keying), and PAM (pulse amplitude modulation). Ex. 1003 at 18–19; *see also* Petition at 9 (repeating identical language). Despite these differences, Petitioner confuses modulation and encoding in its argument. Vrazel discloses that the encoder produces an encoded (not modulated) signal because it "receives the encoded data signal from EPC module 510 and **converts it to an n-channel 'Q-Gray code' encoded** signal." Petition at 28 (emphasis added). The Petition further admits that

this is referred to as "**encoding** 'greater amounts of data.'" *Id.* Thus, Vrazel's encoder performs Q-grey encoding, not modulation. The name "encoder" (Vrazel Fig. 5), the Petition's admission that this encoder "converts it into an n-channel 'Q-Gray code' encoded signal" (Petition at 30), the Petition's admission that this is "encoding" (Petition at 30), and the Petitioner's expert's explanation that modulation and encoding are different techniques (Ex. 1003 at 18–19) all make clear that Vrazel's encoder performs encoding, not modulation. Despite admitting that encoding and modulating are separate and distinct techniques, neither Petitioner nor its expert explain how Vrazel's description of encoding (and reference to an "encoder") is also a reference to modulation by a modulator. According to Petitioner's expert, Q-Gray coding is not known as a modulation technique. *See* Ex. 1003 at 18–19 (listing known modulation techniques, and Q-Gray coding is not one of them); Ex. 1001 at 10:11–19 (same).

Petitioner and its expert have also failed to demonstrate how a pre-distorter is a modulator. According to Vrazel, its "pre-distortion circuit 511 can modify the transmitted signal based on knowledge of prior data and known link linear and nonlinear performance." Ex. 1006 at [0069]. Pre-distortion will "help compensate for non-ideal link frequency response and for some classes of link non-linearities, effectively reducing pattern-dependent errors in the transmitted data." *Id.* at [0054]. Vrazel's pre-distortion circuit is shown in Figure 10. *Id.* at [0023], [0070].

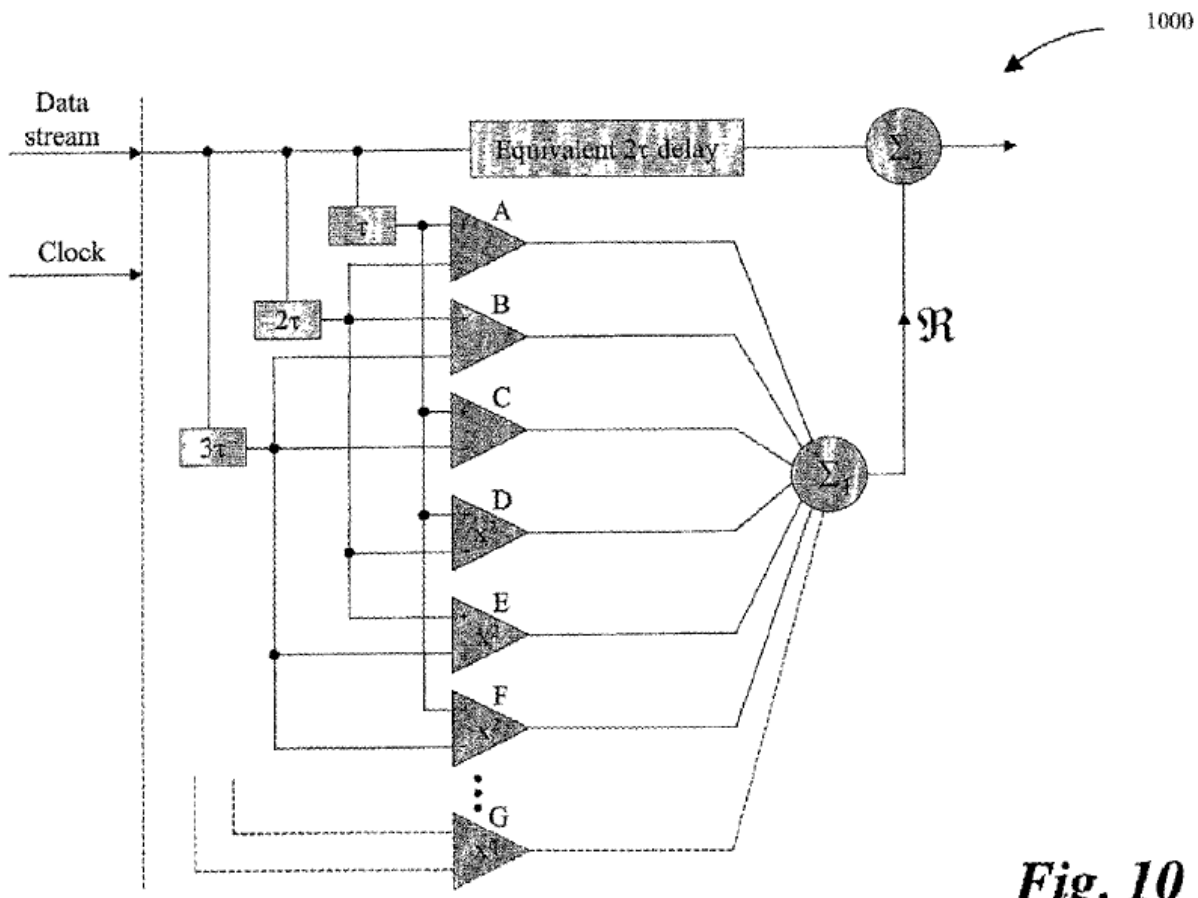

Fig. 10

Id. at Fig. 10. There is no reference to modulation in Figure 10. The variation of the pre-distortion circuit in Fig. 12 uses integrators ∫, but still no modulator. *Id.* at Fig. 12, [0080]–[0081]. Again, neither Petitioner nor its expert addresses this deficiency.

Moreover, the Petition argues that some form of "modulation" occurs after the DAC, well after the encoder or pre-distorter identified by Petitioner: "Vrazel's DAC outputs an electrical signal … that can be used to modulate the optical source" later. Petition at 30, 33. Under the Petitioner's own representation, therefore, it is the ***DAC's output*** that can be used **later** to modulate the optical source block at the far-

right side of Figure 5, contradicting Petitioner's argument that modulation happens in the encoder or pre-distorter.[2]

In summary, the Petition should therefore not be instituted because: 1) it is admitted that encoders and modulators are separate and distinct concepts; 2) neither the encoder nor the pre-distorter are modulators, so neither the encoder nor the pre-distorter convert anything into the claimed "modulation signal," and 3) the Petition argues that modulation is performed after, not by, the encoder and pre-distorter of Vrazel.

3. All Claims Depending From Claim 1: Claims 2, 3, 5, 10, 13, 14, 16–21

Claims 2, 3, 5, 10, 13, 14, and 16-21 depend from claim 1. None of Petitioner's arguments regarding these claims cures the deficiencies regarding claim 1. Because the Petition fails to demonstrate a reasonable likelihood that claim 1 is obvious at least for the reasons discussed above, the Petition similarly fails to demonstrate a reasonable likelihood of success regarding these dependent claims.

---

[2] For the sake of clarity, Patent Owners are not admitting that Vrazel discloses the claimed modulator. This argument shows that Petitioner and its expert admit that its argument regarding element [1b] is unsupported.

B. Ground II: Vrazel, Pang, and Yee

1. Dependent Claims 11 and 12

Claims 11 and 12 depend from claim 1. None of Petitioner's arguments regarding these claims cures the deficiencies regarding claim 1. Because the Petition fails to demonstrate a reasonable likelihood that claim 1 is obvious at least for the reasons discussed above, the Petition similarly fails to demonstrate a reasonable likelihood of success regarding these dependent claims.

V. Prosecution History Involves Repeated Examination of One Electrical Reference Combined with a Form Factor Reference

During examination and reexamination, the USPTO repeatedly considered the combination of a primary reference cited for the electrical signal processing components (such as an m-ary modulator, digital to analog converter, driver, amplifier, clock data recovery, equalizer, and/or m-ary demodulator) of an optical transceiver with a second reference cited for a pluggable form factor. This section identifies instances where the USPTO previously considered similar arguments or similar prior art.

A. App. 12/512,968 (Patent 9,337,948) File History

During examination of application 12/512,968, the inventors pursued claims similar to the claims of the presently challenged patent—especially dependent claim 2, which recites types of pluggable form factors. *Compare* Ex. 2004 at 180, *with* Ex. 1001 at 14:57–15:29; *see also II-VI, Inc. v. Alexander Soto*, IPR2021-01358, Paper

10 at 21–22 (PTAB. Feb. 15, 2022) (recognizing relevance and similarity of preceding applications). During prosecution, the Examiner repeatedly rejected the claims, citing Pat. 6,603,822 ("Brede") for the electrical signal processing components in combination with Pub. 2007/0031153 ("Aronson") for teaching various pluggable form factors. *See* Section V(F) below (citing multiple rejections). The Examiner believed that "these types of form factors are well known in the art." Ex. 2004 at 146–47. The Examiner ultimately was persuaded to withdraw his objections and allowed some of the pending claims.

B. App. 15/095,137 (Pat. 9,887,795) File History

In the next continuation application 15/095,137, the Examiner issued multiple rejections based on combinations that cited one reference for electrical components and a second reference for the pluggable form factor. First, the Examiner again rejected the claims based on Brede and Aronson, citing Brede for electrical components and Aronson for teaching that "these types of form factors are well known in the art." Ex. 1002 at 174–78. Next, the Examiner issued a rejection based on a combination of Pat. 9,337,948, which was cited for the electrical components, with Pub. 2002/0181895 ("Gilliland"), which was cited to show that "a pluggable optical transceiver module is well known in the art." *Id.* at 120. Finally, the Examiner issued a rejection citing Brede for electrical components in combination with Pat. 7,729,617 ("Sheth") such that one would "utilize a pluggable form factor standard

as taught by Sheth." *Id.* at 121–23, 126–27.

The inventors submitted evidence and arguments to overcome the Examiner's rejections based on these combinations. *Id.* at 161, 152–56, 69–74. The inventors also amended the independent claim to recite "pluggable" throughout to ensure this word received patentable weight and to distinguish line card products like in Brede. *Id.* at 148–49. Ultimately, the amendments and arguments persuaded the Examiner that it was not obvious to combine one reference teaching electrical signal processing components with a second reference teaching a pluggable form factor, and the Examiner allowed the pending claims. The claims issued in the '795 Patent, which Petitioner challenges in IPR2023-00834.

C. App. 15/884,351 (Pat. 10,263,723) File History

In this continuation, the Examiner allowed the claims in a first action allowance. Ex. 2008 at 46. The claims issued in the '723 Patent, which Petitioner challenges in IPR2023-00835.

D. App. 16/297,610 (Pat. 10,771,181 Patent) File History

In this continuation, the Examiner considered similar prior art and issued a double patenting rejection. Ex. 2007 at 124–33. After an amendment and a terminal disclaimer, the Examiner issued a notice of allowance. The claims issued in the '181 Patent, which Petitioner challenges in IPR2023-00838.

E. The Board Denied Institution of Previous IPR Petitions

Finisar Corporation (the real party behind "II-VI, Inc.") filed petitions in IPR2021-01358, IPR2021-01359, and IPR2021-01361 seeking review of Patent Nos. 9,887,795; 10,263,723; and 10,771,181. In these petitions, Finisar/II-VI presented multiple combinations where one reference was cited as disclosing electrical components and a second reference was cited as disclosing the use of a pluggable optical transceiver form factor. *II-VI, Inc. v. Alexander Soto*, IPR2021-01358, Paper 1 at 14 (PTAB Aug. 6, 2021). The Board exercised its discretion to deny institution in all three petitions under 35 U.S.C. § 325(d) . *II-VI, Inc. v. Alexander Soto*, IPR2021-01358, Paper 10 at 30 (PTAB. Feb. 15, 2022).[3]

In denying Finisar's/II-VI's IPR petitions, the Board first considered the proposed combination of Brede and Pub. 2004/0052528 ("Halgren"). *Id.* at 20–26. Finisar/II-VI relied on Brede for teaching the claimed electrical signal processing components while relying on Halgren for teaching "pluggable form factors, arriving at a pluggable optical transceiver." *Id.* at 20–21. The Board denied institution because Halgren was "substantially the same because it is applied for its alleged

[3] The petitions and decisions in IPR2021-01358, IPR2021-01359, and IPR2021-01361 were substantially similar across the three cases. For brevity, this Petition makes exemplary citations only to the IPR2021-10358 case.

disclosure of standard form factors into which Brede's device can allegedly be incorporated, just as the Examiner applied Aronson and Sheth as disclosing form factors into which Brede's device can allegedly be installed." *Id.* at 22. The Board found that the Examiner had specific knowledge of standardized pluggable form factors in the industry based on Aronson, Gilliland, and Sheth. *Id.* at 25. Thus, Brede and Halgren presented "substantially the same art and substantially the same arguments," warranting denial of institution. *Id.* at 26.

Next, the Board considered Finisar's/II-VI's proposed combination of Pub. 2003/0112896 ("Raghavan") and Pub. 2003/0118273 ("Richard"). *Id.* at 26–27. Raghavan described a data transmission system, where "[t]ransmitter systems 210 and receiver systems 220 may be implemented as a transceiver formed on a single semiconductor chip." *Id.* at 13. Richard described an optical device that may be made with "a standard form factor" such as "the GBIC form factor, the small form factor (SFF) and the small form pluggable (SFP) form factor." *Id.* at 13. This second combination followed the same electrical teaching plus form factor teaching template. Finisar/II-VI relied "on Raghavan for its description of a transceiver chip that can transmit data using multiple frequency-separated channels, and on Richard for its disclosure of a variety of form factors to allow for use in a hot pluggable environment." *Id.* at 26 (internal quotations and alterations omitted). Specifically, Finisar/II-VI contended that a POSITA "would have been motivated to provide the

functionality of *Raghavan's* transceiver chip into *Richard's* form factors to make *Raghavan's* transceiver chip hot pluggable." *Id.* at 26 (italics original). The Board concluded that this rationale "parallels Petitioner's contention for the combination of Brede and Halgren," merely "with Raghavan substituting for Brede and Richard substituting for Halgren." *Id.* at 26. Thus, this Raghavan and Richard combination presented "substantially the same art and substantially the same arguments," warranting denial of institution. *Id.* at 27.

Finally, the Board considered Finisar's/II-VI's proposed combination of Pub. 2002/0012152 to Agazzi ("Agazzi '152") and Richard. *Id.* at 27–30. As with Brede and Raghavan, Finisar/II-VI relied on Agazzi '152 for describing the electrical components of "electrical and optical receivers and transceivers that rely on processing of optical signals," including the digital processing therein. *Id.* at 13–15, 28. Finisar/II-VI again relied on Richard for teaching "a variety of form factors that allow for use in a hot pluggable environment." *Id.* at 28 (cleaned up). The Board again concluded that this line of argument "parallels the rationale advanced for the Brede-Halgren and Raghavan-Richard challenges," namely that "a person of ordinary skill in the art would have been motivated to provide the functionality of *Agazzi* into *Richard's* form factors." *Id.* at 28 (italics original). Thus, Agazzi '152 and Richard presented "substantially the same art and substantially the same arguments," warranting denial of institution. *Id.* at 29.

F. Summary of Related Family and Considered Combinations

The challenged patent relates to other applications summarized in Table 1 below:

App. No.	(Patented As)	Relationship	Parent App. No.	(Patented As)
16/297,610	10,771,181	Continues from	15/884,351	10,263,723
15/884,351	10,263,723	Continues from	15/095,137	9,887,795
15/095,137	9,887,795	Continues from	12/512,968	9,337,948
12/512,968	9,337,948	Continues from	11/772,187	(none)
11/772,187	(none)	Continues-in-Part from	10/865,547	7,242,868
10/865,547	7,242,868	Claims priority to	(Provisionals)	(Expired)

Table 1

During examination and IPR, the USPTO ***repeatedly and extensively*** considered the combination of one reference cited for the electrical signal processing components (such as an m-ary modulator, digital to analog converter, driver, amplifier, clock data recovery, equalizer, and/or m-ary demodulator) of a transceiver with a second reference cited for a pluggable form factor. So far, the USPTO has already considered or is considering the following:

- Brede cited for a transceiver's electrical signal processing components, in combination with Aronson cited for the form factor. Ex. 2004 (App. 12/512,968) at 142–43, 146–47 (rejecting claims), 135 (summarizing interview arguments),

107–08, 112–13 (rejecting claims), 78–84 (appealing rejection), 45–50 (answering the appeal brief), 27–29 (ruling on appeal); Ex. 1002 ('795 Patent) at 174–78 (rejecting claims).

- Patent 9,337,948 to Soto cited for a transceiver's electrical signal processing components, in combination with Gilliland cited for the form factor. Ex. 1002 ('795 Patent) at 120 (rejecting claims).
- Brede cited for a transceiver's electrical signal processing components, in combination with Sheth cited for the form factor. Ex. 1002 ('795 Patent) at 121–23, 126–27 (rejecting claims), 69–72 (responding to office action).
- Raghavan cited for a transceiver's electrical signal processing components, in combination with Richard cited for the form factor. *II-VI, Inc. v. Alexander Soto,* IPR2021-01358, Paper 10 at 3, 12–13, 26–27 (PTAB Feb. 15, 2022) (denying institution); *II-VI, Inc. v. Alexander Soto,* IPR2021-01359, Paper 10 at 11, 13–14, 17, 28–29 (PTAB Feb. 15, 2022) (denying institution); *II-VI, Inc. v. Alexander Soto,* IPR2021-01361, Paper 10 at 11, 14–15, 18, 29–31 (PTAB Feb. 15, 2022) (denying institution).
- Agazzi '152 cited for a transceiver's electrical signal processing components, in combination with Richard cited for the form factor. *II-VI, Inc. v. Alexander Soto,* IPR2021-01358, Paper 10 at 3, 13–14, 27–29 (denying institution); *II-VI, Inc. v. Alexander Soto,* IPR2021-01359, Paper 10 at 11, 12–13, 17, 30–31 (denying

institution); *II-VI, Inc. v. Alexander Soto,* IPR2021-01361, Paper 10 at 11, 12–13, 18, 31–33 (denying institution).

- Brede cited for a transceiver's electrical signal processing components, in combination with Halgren cited for the form factor. *II-VI, Inc. v. Alexander Soto,* IPR2021-01358, Paper 10 at 3, 15–17, 20–26 (denying institution); *II-VI, Inc. v. Alexander Soto,* IPR2021-01359, Paper 10 at 11, 15–17, 22–28 (denying institution); *II-VI, Inc. v. Alexander Soto,* IPR2021-01361, Paper 10 at 11, 16-18, 23–29 (denying institution).
- Patent 6,879,640 to Agazzi ("Agazzi '640") cited for a transceiver's electrical signal processing components, in combination with Pat. 6,873,800 to Wei ("Wei") cited for the form factor. *Nokia of Am. Corp. v. Alexander Soto*, IPR2023-00680, Paper 1 at 9–27 (PTAB Mar. 15, 2023) (petitioning for review); *Nokia of Am. Corp. v. Alexander Soto*, IPR2023-00681, Paper 1 at 9–30 (PTAB Mar. 15, 2023) (petitioning for review); *Nokia of Am. Corp. v. Alexander Soto*, IPR2023-00682, Paper 1 at 9–28 (PTAB Mar. 15, 2023) (petitioning for review).
- Patent 7,933,341 to Agazzi ("Agazzi '341") cited for a transceiver's electrical signal processing components, in combination with Wei cited for the form factor. *Nokia of Am. Corp. v. Alexander Soto*, IPR2023-00680, Paper 1 at 39–55 (petitioning for review); *Nokia of Am. Corp. v. Alexander Soto*, IPR2023-00681, Paper 1 at 43–61 (petitioning for review); *Nokia of Am. Corp. v. Alexander Soto*,

IPR2023-00682, Paper 1 at 40–57 (petitioning for review).

- Vrazel cited for a transceiver's electrical signal processing components, in combination with Pang cited for the form factor. *Infinera Corp. v. Alexander Soto*, IPR2023-00834, Paper 2, *passim* (PTAB Apr. 14, 2023) (petitioning for review); *Infinera Corp. v. Alexander Soto*, IPR2023-00835, Paper 2, *passim* (PTAB Apr. 14, 2023) (petitioning for review); *Infinera Corp. v. Alexander Soto*, IPR2023-00838, Paper 2, *passim* (PTAB Apr. 14, 2023) (petitioning for review).

VI. The Board Should Deny Institution Under Section 325(d)

The Board should deny institution under 35 U.S.C. § 325(d) because the USPTO repeatedly upheld the claims over the type of combination that Petitioner proposes: a first reference cited for electrical signal processing components combined with a second referenced cited for pluggable form factors.

In *Advanced Bionics, LLC v. Med-El Elektromedizinische Geräte GmbH*, the PTAB denied institution under Section 325(d) after evaluating the petition under a two-part test:

> 1) whether the petition presents to the Office the same or substantially the same art or arguments previously presented to the Office; and,
> 2) if either condition is satisfied, whether the petitioner has demonstrated that the Office erred in a manner material to patentability of the challenged claims.

IPR2019-01469, Paper 6 (PTAB Feb. 6, 2020) (precedential). As part of this

analysis, the Board considers the non-exclusive *Becton, Dickinson* factors:

> (a) the similarities and material differences between the asserted art and the prior art involved during examination [or any proceeding];
>
> (b) the cumulative nature of the asserted art and the prior art evaluated during examination [or any proceeding];
>
> (c) the extent to which the asserted art was evaluated during examination, including whether the prior art was the basis for rejection;
>
> (d) the extent of the overlap between the arguments made during examination and the manner in which Petitioner relies on the prior art or Patent Owner distinguishes the prior art;
>
> (e) whether Petitioner has pointed out sufficiently how the Examiner erred in its evaluation of the asserted prior art; and
>
> (f) the extent to which additional evidence and facts presented in the Petition warrant reconsideration of the prior art or arguments.

Becton, Dickinson & Co. v. B. Braun Melsungen AG, IPR2017-01586, Paper 8 at 17–18 (PTAB Dec. 15, 2017) (precedential); *Advanced Bionics* at 10.

A. *Becton, Dickinson* Factors (a)-(d) Support Denial Because the Petition Reargues the Extensively-Examined Combination of an Electrical Reference With a Form Factor Reference

The Petition makes the same type of argument that the Patent Office repeatedly considered: that one reference (Vrazel) teaches the electrical signal processing components, and a second reference (Pang) teaches the pluggable form factor. Multiple examiners and the Board repeatedly considered this type of argument and rejected it.

Here, Petitioner swaps the designation of primary and secondary references. However, this change in form results in no new substance. Petitioner still proposes the same type of repeatedly considered combination. Vrazel is offered to provide the same types of disclosures as Brede, Patent 9,337,948, Agazzi '152, and Raghavan. Just as the Board has previously found, any distinctions between the various references no relevance because Petitioner ultimately cites Vrazel for allegedly disclosing the same electrical signal processing parts of the claims.

1. The Examiners and Board Both Extensively Considered the Electrical Reference Plus Form Factor Reference Argument

The Examiner considered multiple combinations where Brede or Patent 9,337,948 (for their purported electrical signal processing) were combined with a pluggable transceiver patent (*e.g.*, Aronson, Sheth, or Gilliland). *See* Section V(F), above (listing instances). Each time, the Examiner ultimately allowed the patent. *See* Section V(A)–(D), above.

The present Petition again makes the same arguments that the Examiner considered, just using different references to make the same points. The Petition again argues that one reference (Vrazel) discloses all the electrical components and a second (Pang) discloses the pluggable form factor. Because the Examiner extensively considered this type of combination during prosecution, *Becton, Dickinson* factors (a)–(d) favor denial. Petitioner uses Vrazel (a) similarly to the

previously considered Brede and Patent 9,337,948 references, (b) for the same teachings of electrical signal processing components, (c) after the Examiner extensively considered these references in the same manner, and (d) Petitioner makes the same type of combination in the same way as previously considered by the Examiner.

The Board declined to institute Finisar/II-VI's IPR petitions because the petitioner presented "substantially the same art and substantially the same arguments" to what the Examiner considered. *II-VI, Inc. v. Alexander Soto*, IPR2021-01358, Paper 10 at 23, 26, 27, 29. The Board found that each of Finisar/IV-II's arguments combined one reference (Brede, Raghavan, or Agazzi '152) for electrical signal processing components with a second reference (Halgren or Richard) for the form factor. *Id.* at 20–26 (denying institution based on Brede and Halgren), 26–27 (denying institution based on Raghavan and Richard), 27–39 (denying institution based on Agazzi '152 and Richard). The Board found that "Halgren is substantially the same because it is applied for its alleged disclosure of standard form factors into which Brede's device can allegedly be incorporated." *Id.* at 22. For Raghavan and Richard, the Board found that the petition "generally parallels its analysis over Brede and Halgren, with Raghavan substituting for Brede and Richard substituting for Halgren." *Id.* at 27. For Agazzi '152 and Richard, the petitioner again "parallels its analysis over Brede and Halgren, this time with Agazzi

substituting for Brede and Richard again substituting for Halgren." *Id.* at 28. For each combination, the Board recognized that simply substituting a new reference while making the same basic argument failed to merit institution. *Id*. 20–30.

Petitioner now makes another parallel argument, substituting Vrazel in place of Brede, Raghavan, or Agazzi '152, combined with Pang in place of Halgren or Richard for the form factor. Because the Board already decided these types of combinations presented "substantially the same art and substantially the same arguments," warranting denial of institution, the Board should decline to institute this IPR again under the same reasoning. *Id.* at 29.

2. The USPTO Already Considered Chip-Based References Like Raghavan, Aronson, and Agazzi '997

Petitioner emphasizes Vrazel's teachings of chip-based electrical components, but the USPTO repeatedly considered this teaching when reviewing Raghavan, Aronson, and Agazzi '997.

First, Finisar/II-VI similarly used Raghavan in three petitions where the PTAB denied institution. *See* Section V(F) above (listing three IPR's involving Raghavan). Raghavan described a data transmission system where "[t]ransmitter systems 210 and receiver systems 220 may be implemented as a transceiver formed on a single semiconductor chip." *II-VI, Inc. v. Alexander Soto,* IPR2021-01358, Paper 10*,* at 12–13. Finisar/II-VI relied on Raghavan for its description of a transceiver chip including electrical signal processing components in combination

with "Richard for its disclosure of a variety of form factors to allow for use in a hot pluggable environment." *Id.* at 26 (internal quotations and alterations omitted).

Petitioner describes and uses Vrazel in the same way, for the claimed electrical signal processing capabilities in a single chip. Petitioner emphasizes that Vrazel's "transmit electronics 'can be integrated into one circuit or multichip module.'" Petition at 17. Petitioner repeats the same "hot pluggable" combination argument. Petition at 11, 14, 21, 22, 24. Just as Finisar/II-VI relied on Richard for pluggable form factors, the Petitioner now relies on Pang for teaching pluggable form factors.

Three PTAB judges explicitly considered and denied institution when presented with a chip-based transceiver reference like Raghavan used for the electrical signal processing component of a transceiver in combination with a second reference used for a form factor. *II-VI, Inc. v. Alexander Soto,* IPR2021-01358, Paper 10*,* at 26–29. The integrated chip and "hot pluggable" aspects made no difference. *Id.* The Board appeared well-aware that electrical components could be implemented as integrated chips. Ultimately, the Board found that "significant similarities with the art involved during examination" under the *Becton, Dickinson* test and that "for the obviousness challenges over Raghavan and Richard, (1) substantially the same art and substantially the same arguments were previously presented to the Office." *Id.* at 27. Thus, the Board concluded "that it is appropriate to exercise our discretion

under 35 U.S.C. § 325(d) to deny the Petition." *Id.* at 27. Here, Petitioner made no attempt to identify any errors with the Board's decision regarding Raghavan and Richard, and Petitioner presents no new evidence or arguments. The same outcome should result: discretionary denial.

Second, the Examiner issued multiple rejections based on Aronson, which teaches integrated circuits. Ex. 2004 at 146–47 (rejecting claims), 112–13 (maintaining rejection); Ex. 1002 at 177–78. Aronson describes an XFP module where "eye open and ROSA [receiver optical sub-assembly] may be integrated within a single ASIC." Ex. 2003 at [0045]. Thus, teachings of electrical signal processing components in a single integrated circuit or single chip were already considered.

Finally, the Examiner found and cited Agazzi '997, which states, "technology such as CMOS . . . may be used to implement the electronic circuitry." Ex. 2005 at [0039]; Ex. 2001 at 33 (citing Agazzi '997), 9–14 (searching similar claims). Thus, the Vrazel teachings of electrical signal processing components in a single integrated circuit or single chip were already considered.

In conclusion, Petitioner's chip-based arguments are substantially similar to what the Board already considered, so *Becton, Dickinson* factor (a) weighs in favor of discretionary denial.

3. The Pang Reference is Similar to References Already Examined for Form Factors

Petitioner cites the Pang reference for teaching a "pluggable" form factor—the same way that Aronson, Gilliland, Sheth, Richard, and Halgren have been repeatedly considered by the Examiner and Board.[4]

During prosecution of the patent family, the Examiner cited Aronson, Gilliland, and Sheth for teaching a pluggable form factor to be combined with a primary reference. *See* Section V(F) above (citing instances). The Board further considered Richard and Halgren for IPR, cited by Finisar/II-VI for teaching the pluggable form factor to be combined with a primary reference, and the Board declined to institute IPR. *See* Section V(F) above (citing instances).

Petitioner now uses Pang in the same way—merely for teaching a pluggable form factor of an optical transceiver. Petition at 10–11, 20–23. Because the Examiner and Board extensively considered this type of combination, *Becton, Dickinson* factors (a)–(d) favor denial. Petitioner uses Pang (a) similarly to previously considered form factor references, (b) for cumulative teachings of "pluggable" form factors, and (c) when the PTO extensively and explicitly addressed

[4] By the time the Board decides this Petition, the Board will likely also have considered the Wei reference cited in Nokia's IPR petitions for this same purpose. *See* Section V(F) above (listing IPR petitions based on Wei).

this type of reference in both prosecution and IPR. Now, (d) Petitioner makes the same type of combination by substituting Pang in place of the previously examined form factor references. The Board should deny institution under 35 U.S.C. § 325(d).

4. Petitioner Argues the Incorrect Comparisons

The Petition attacks a straw man by arguing that Pang is not cumulative of references like Brede and by arguing that Vrazel is not cumulative of references like Aronson and Sheth. Petition at 61–63. Petitioner incorrectly compares Pang (a pluggable reference) to Brede (an electrical signal processing component reference). Petitioner also incorrectly compares Vrazel (an electrical signal processing component reference) to Aronson and Sheth (pluggable references). The comparisons should be swapped. For the reasons in Section VI(A)(1)–(3), Pang (not Vrazel) is similar to Aronson and Sheth (and to Gilliland, Richard, and Halgren), while Vrazel (not Pang) is similar to Brede (and to Agazzi ’152 and Raghavan).

Petitioner simply swaps its designation of primary references and secondary references to avoid addressing the relevant comparisons, but this swap has no substantive effect. Petitioner still argues to combine a pluggable module of one reference with electronics disclosed in another reference. Petitioner’s argument along the lines of starting with a pluggable module of a primary reference and adding electronic components of a secondary reference differs only in form, not substance, from the repeatedly considered arguments about taking the electronics from a

primary reference and adding them into a pluggable module taught by a secondary reference. The USPTO has repeatedly declined to institute based on this argument and should do so again.

B. *Becton, Dickinson* Factor (e) Supports Denial Because the USPTO Made No Errors During Prosecution or IPR

The Examiner made no errors when examining the challenged patent, and the Board made no errors when denying Finisar/II-VI's IPR petitions. The Examiners and the Judges were well-aware of electrical signal processing designs, modulation, and the existence of pluggable form factors. All of the purported mistakes identified by Petitioner are based on its meaningless switch in the ordering of its references. When the actual disclosure of the references is considered (that is, Petitioner's like references are compared to like references from the file history), *Becton, Dickinson* factor (e) weighs against institution. Neither the Examiner nor the Board made any errors when examining the '795 Patent or its family.

1. The USPTO Knew About Pluggable Form Factors

First, the Petition attempts to manufacture a deficiency in Brede, arguing that "[u]nlike Pang, however, Brede does not disclose a pluggable optical transceiver." Petition at 61–62. But the Examiner recognized this deficiency of Brede and thus turned to combinations involving Aronson, Gilliland, and Sheth for the pluggable optical transceiver—in the same way that Petitioner now attempts to cure this same deficiency of Vrazel by using Pang.

It is beyond dispute that the Examiner knew of and attempted to cure the deficiency of Brede. During examination of application 12/512,968, the Examiner issued a nonfinal office action rejecting the claims because "as evidenced by Aronson, these types of form factors [SFP; SFP+; XFP; X2; XENPAK; XPA] are well known in the art (paragraph [0005], [0011], [0045])"). Ex. 2004 at 146–47 (rejecting claims), 112–13 (maintaining rejection); Ex. 1002 at 177–78. The Examiner cited Gilliland [0003] for a pluggable module when examining application 15/095,137. Ex. 1002 at 120 ("Gilliland teaches that the concept of a pluggable optical transceiver module is well known in the art (e.g., 'hot-pluggable' as in paragraph [0003] and 'small form factor pluggable (SFP) configuration' as recited in claim 8)"). The Examiner also cited Sheth for pluggable modules. *Id.* at 126–27 ("Sheth in particular teaches . . . the pluggable form factor standard of the pluggable optical transceiver module is an SFP form factor or SFP+ form factor standard."). Petitioner's manufactured error—that Pang finally teaches the missing pluggable module that the USPTO did not know about—has no basis in the record.

Moreover, the Board already ruled on this issue when it denied the Finisar/II-VI petitions. *II-VI, Inc. v. Alexander Soto*, IPR2021-01358, Paper 10. There, the Board denied institution because Halgren was "substantially the same because it is applied for its alleged disclosure of standard form factors into which Brede's device can allegedly be incorporated, just as the Examiner applied Aronson and Sheth as

disclosing form factors into which Brede's device can allegedly be installed." *Id.* at 22. The Board found that the Examiner had specific knowledge of standardized pluggable form factors in the industry based on Aronson, Gilliland, and Sheth. *Id.* at 25. The Board repeatedly applied this reasoning when presented with references allegedly disclosing the missing "pluggable" limitation. *Id.* at 26–27 ("with Raghavan substituting for Brede and Richard substituting for Halgren" presenting "substantially the same art and substantially the same arguments," warranting denial of institution). Petitioner's substitution of Pang for allegedly teaching the form factor should result in the same outcome: discretionary denial.

2. The USPTO Knew About Signal Processing and Modulation

Second, the Petition attempts to manufacture a deficiency by arguing that "Vrazel discloses the well-known use of conventional signal processing and modulation techniques …. Neither Aronson nor Sheth include this same disclosure." Petition at 62. The Petition errs because the Examiner considered Brede (not Aronson or Sheth) for the signal processing and modulation teachings allegedly disclosed in Vrazel. In highlighting the deficiency of the pluggable references, Petitioner overlooks the electrical signal processing references such as Brede, Raghavan, and Agazzi '152.

It is beyond dispute that the Examiner cited Brede for signal processing and modulation like what is allegedly taught in Vrazel. During examination of

application 12/512,968, the Examiner issued a nonfinal office action rejecting the claims because "Brede teaches an optical transceiver module … comprising: … m-ary modulation … a driver … an optical transmitter … an optical detector … an amplifier … a clock data recovery and equalization unit … and a de-modulator." Ex. 2004 at 142–44 (rejecting claims), 107–09 (maintaining rejection).

The Board further repeatedly considered signal processing and modulation references when it denied the Finisar/II-VI petitions. *II-VI, Inc. v. Alexander Soto*, IPR2021-01358, Paper 10. In denying Finisar's/II-VI's IPR petitions, the Board considered "Brede for its description of an optical data transmission system that uses m-ary modulation … and for its description of how the transmitted signal can be corrected and cleaned to remove unwanted noise, as well as how clock data can be recovered." *Id.* at 20 (internal quotation marks omitted). The Board recognized how the Examiner repeatedly cited Brede for these features. *Id.* at 20–22. The Board similarly considered Raghavan for its description of "a transceiver chip that can transmit data using multiple frequency-separated channels." *Id.* at 26. The Board concluded that the arguments for Raghavan rationale "parallels Petitioner's contention for the combination of Brede," and constituted "substantially the same art," warranting denial of institution. *Id.* at 26–27. The Board then considered Agazzi '152 for signal processing and modulation and again denied institution because Agazzi '152 was "substantially the same art" as Brede and Raghavan. *Id.* at 13–14,

27–29.

Petitioner's manufactured error—that Vrazel finally teaches the missing signal processing and modulation techniques that the USPTO did not know about—is inconsistent with the record and does not support institution.

3. Petitioner's Swapping the Labels of "Primary" and "Secondary" Does Not Create Error by the USPTO

Finally, the Petition argues that because it swapped the designation of primary and secondary references, "here, Vrazel is applied in a completely different manner with a completely different motivation to combine." Petition at 62. This puts form over substance. The Petition does not offer any explanation about how this manner of combination is different from what the USPTO already repeatedly considered. As discussed in preceding Section V(A), Petitioner is still arguing to combine a pluggable module of one reference with electronics disclosed in another reference. Petitioner offers no explanation of how a POSITA might think differently had a POSITA first seen a pluggable module before looking at an electronic circuit rather than the other way around. Petitioner's proposed combination is the same: using hindsight to select certain electronics from one reference to add into a pluggable module taught by a secondary reference. Petitioner never articulates why flipping the designation of primary and secondary references is substantively relevant, because it is not.

The Board repeatedly considered "a reference teaching an optical transceiver

module and a reference teaching a standard form factor" when the Board denied institution based on the Brede-Halgren, Raghavan-Richard, and Agazzi '152-Richard combinations. *II-VI, Inc. v. Alexander Soto*, IPR2021-01358, Paper 10, at 27, 29. It should do so again here.

C. *Beckton, Dickinson* Factor (f) Weighs Against Institution Because the Petition Has No New Evidence or Facts Warranting Reconsideration

Petitioner does not submit any new evidence or facts warranting reconsideration. It simply makes the same arguments using other references for primary and secondary references. Nor are Petitioner's arguments differentiating the references persuasive. A conclusory expert declaration, making arguments similar to those in the Finisar/II-VI petitions, is not new evidence. *Beckton, Dickinson* factor (f) therefore weighs against institution.

D. Conclusion: Institution Should Be Denied Under *Advanced Bionics*

As demonstrated above, each of the factors in the *Advanced Bionics* and *Becton, Dickinson* analysis strongly favors denying institution. Each of Petitioner's grounds is repetitive of arguments that the Examiner and Board have already considered and rejected. Petitioner has provided no compelling (or accurate) reasons to revisit these decisions. Institution should be denied.

VII. The Board Should Deny Institution Under *Fintiv*

The Board should not waste its limited resources to reconsider the same type

of repeatedly rejected arguments when, under the *Fintiv* factors, the Board's decision will likely have no effect whatsoever on trial. The final written decision is not expected until December 9, 2024, well after the trial scheduled for May 6, 2024.

The *Fintiv* factors are: 1) whether the court granted a stay or evidence exists that one may be granted if a proceeding is instituted, 2) a comparison of the district court trial date to the Board's statutory deadline, 3) investment in the district court proceedings, 4) overlap between issues raised in the petition and in the parallel proceeding, 5) overlapping parties, and 6) other considerations. *Apple Inc. v. Fintiv, Inc.*, IPR2020-00019, Paper 11 at 13-14 (PTAB Mar. 20, 2020) (precedential).

Petitioner's discussion of the "compelling evidence" consideration is incomplete. Petition at 71. Director Vidal later clarified that all *Fintiv* factors should be considered, and that even a "compelling" case does not result in automatic institution. *Commscope Tech. LLC v. Dali Wireless, Inc.*, IPR2022-01242, Paper 23 (PTAB Feb. 27, 2023) (vacating the Board's *Fintiv* decision to institute for compelling merits). There, Director Vidal clarified that, "Although I now recognize that this instruction could be read to allow for a compelling merits determination as a substitute for *Fintiv* analysis, that was not my intent." *Id.* at 4.

Factor 1 (a stay) weighs against institution. Judge Gilstrap has rarely stayed a patent case pending *inter partes* review, only granting 4 of 44 motions to stay pending an IPR (9.1%) according to a report from Docket Navigator:

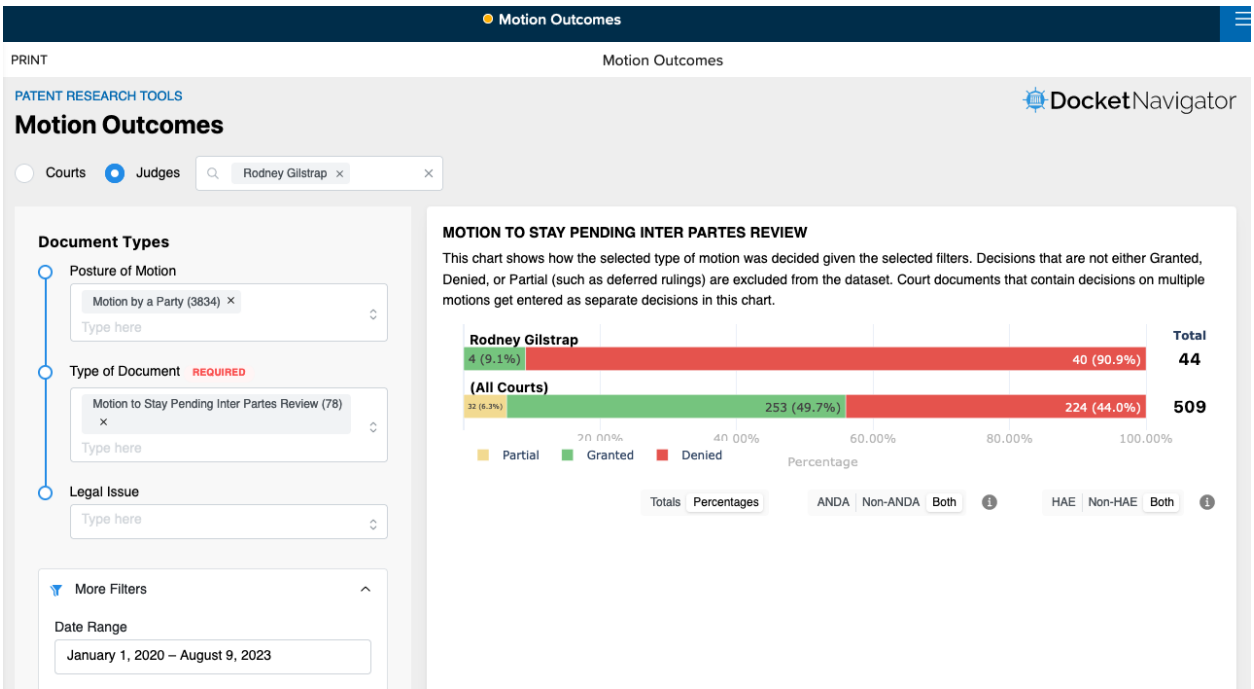

Docket Navigator Motion Outcomes Report (August 9, 2023)

Because of the 90.9% chance that a stay will be denied, this factor weighs against institution.

Factor 2 (the trial and written decision deadlines) weighs heavily against institution. Trial is set for May 6, 2024. Ex. 1025 at 1. Petitioner's time to trial statistics for the Eastern District of Texas also predict trial in May 2024. Petition at 65. The final written decision is not expected until December 9, 2024—more than half a year later. Nothing suggests that litigation will deviate from the schedule or mean statistics by more than half a year, especially because Petitioner has not moved to stay the case. This seven-month buffer gives the Court sufficient time to try all cases against Petitioner and the other three pending co-defendants. Precedent weighs these facts in favor of denying institution. *Fintiv,* IPR2020-00019, Paper 11 at 9.

Factor 3 (investment in court proceedings) favors denial. By the time the Board reaches the institution decision on December 9, 2023, the parties will have served their infringement and invalidity contentions, the parties will have fully briefed claim construction, the District Court will have held the claim construction hearing (scheduled for November 8, 2023), and expert reports will have been served (scheduled for December 6, 2023). Ex. 1025 at 3. Petitioner could have filed the Petition earlier—it served invalidity contentions in the litigation months prior to the Petition (February 2, 2023) and likely had identified these grounds well before its contentions were served—but Petitioner offers no reason for this delay. Because the District Court and the parties will have invested significant resources to reach claim construction in litigation by the time the Board issues its institution decision, this factor weighs against institution. *Fintiv,* IPR2020-00019, Paper 11 at 9–10.

Factor 4 (overlap between issues) is neutral for now and will not weigh in favor of institution until Petitioner files its *Sotera* stipulation with the District Court. *See Sotera Wireless, Inc. v. Masimo Corp*., IPR2020-01019, Paper 12 at 13–14, 18–19 (PTAB Dec. 1, 2020) (precedential). In *Sotera*, "Petitioner filed a stipulation in the District Court." *Id.* at 13. In contrast, here Petitioner has made a *Sotera* stipulation to the PTAB, but Petitioner has yet to file its stipulation with the District Court, despite having plenty of time to do so. To give the District Court direct power to enforce the stipulation, Petitioner must file a stipulation with the District Court

that Petitioner and its real parties in interest[5] will not pursue in the district court litigation any ground raised or that could have been reasonably raised in this IPR. This factor may weigh in favor of institution once Petitioner files its stipulation, but this factor remains neutral until then.

Factor 5 is agreed to be neutral.

The final *Fintiv* factor considers the merits and other circumstances. For the reasons in Section IV above, the Petition will not likely succeed on the merits, much less reach any level of "compelling merit." This is because Petitioner has taken the unreasonable position that Vrazel's encoder is a modulator. *See* Section IV(A)(2) above. As discussed in Section V above, the USPTO has repeatedly considered the same line of argument combining an electrical signal processing component reference with a pluggable module reference, albeit with other references. Rather than directly address this, Petitioner attempts to avoid it by flipping the designation of primary and secondary references. The weak merits and redundant arguments weigh against institution.

---

[5] As discussed later in this section, Petitioner's refusal to file its stipulation in Court appears to be part of Petitioner's unreasonable argument that estoppel against real parties in interest is irrelevant to the District Court litigation so that other defendants can repeat these arguments in Petitioner's place.

Under the final *Fintiv* factor, one other circumstance weighs against institution: Petitioner's lack of transparency regarding the real parties in interest and Petitioner's attempt to unfairly evade the estoppel provision of 35 U.S.C. § 315(e)(2). Under this provision, the Petitioner and its real parties in interest may not assert "any ground that the petitioner raised or reasonably could have raised during that *inter partes* review" in the district court litigation. Petitioner identifies only Infinera Corporation and Cisco Systems, Inc. as real parties in interest. Petition at 67. Patent Owners submit that this is likely incomplete. Petitioner worked with its co-defendants in the litigation (Fujitsu, Nokia, and AT&T) to prepare invalidity contentions. The arguments in the Petition are a subset of such arguments. Thus, at the very least, Fujitsu, Nokia, and AT&T coordinated with each other on the substance of the invalidity arguments in the grounds asserted here. Patent Owners also believe Petitioner has coordinated with its co-defendants directly regarding IPR strategy, including the arguments raised in the Petition.

On June 2, 2023, in response to a demand from Patent Owners for real-party-in-interest related discovery, Petitioner's litigation counsel responded, "NextGen is not entitled to district court discovery relating to real party in interest issues," and "Infinera will not produce discovery that is not relevant to the district court action." Ex. 2006 at 4. Petitioner reconsidered but only agreed to produce limited discovery that overlaps with damages issues. *Id.* at 3. Petitioner still refuses to produce

discovery that reveals the full extent of its cooperation with the other co-defendants in preparing this Petition, including Petitioner's joint defense agreement, communications, cost-sharing, drafts, prior art searching and selection, and IPR-related decisions made with Nokia, AT&T, and Fujitsu. When specifically pressed to identify if such documents exist, Petitioner's litigation counsel responded, "Infinera will not entertain this inquiry." *Id.* at 1. Such documents apparently exist because Infinera wrote that these requests "go beyond the scope of relevant discovery and seek to encroach on applicable privileges and protections," suggesting the existence of responsive, common-interest privileged documents between Infinera and its co-defendants. *Id.* Petitioner's refusal to provide the requested discovery and assertion of privilege calls into question the veracity of its representations to the Board and should be held against Petitioner. If Petitioner had nothing to hide and had no intent to evade estoppel, Petitioner should have provided the requested discovery or unambiguously responded that no such documents exist.

The real party in interest determination is important for many reasons, including the statutory scope of estoppel. Congress intended for the estoppel provision to prevent real parties in interest from obtaining an unfair second bite at the apple in district court if the party loses at the PTAB. Petitioner's refusal to produce discovery suggests an improper attempt to reserve a second bite through its co-defendants (indeed, one such co-defendant, Nokia, has filed its own petitions,

making similar arguments using different references and has made parallel efforts to evade estoppel). Petitioner's tactics in withholding relevant, important information implicates its duty of candor to the USPTO. *See Spectrum Solutions LLC v. Longhorn Vaccines & Diagnostics, LLC*, IPR2021-00860, Paper 107 (PTAB May 3, 2023) (sanctioning party for withholding material information).

Based on Petitioner's lack of real party in interest discovery, Petitioner's refusal to file its *Sotera* stipulation with the Court, and Petitioner's omission of binding real parties in interest in its stipulation to the Board all suggest that Petitioner or its co-defendants will attempt to re-raise the same art in litigation even after a Final Written Decision issues. The Board should consider this inefficient, duplicative outcome when considering discretionary denial.

VIII. Conclusion: The Board Should Not Institute the Petition

The Board should deny the Petition on the merits because, based on Petitioner's own representations about the scope of Vrazel, it does not disclose element [1b]and because the proposed final combination has no modulator at all. Alternatively, the Board should deny institution under 35 U.S.C. § 325(d) or *Fintiv* to avoid wasting its limited resources on rehashing the same, extensively-examined combination to write a decision that will not issue until half a year after trial.

Alexander and Walter Soto invented the world's first pluggable, m-ary optical transceiver as recited in the claims. Petitioner failed to find a single reference that

describes a pluggable transceiver with the claimed signal processing capabilities. The Soto brothers ventured into the area of m-ary signal processing described as "an unexplored possible application" of technology. Ex. 1014 at 887. This exemplifies the "progress of science and useful arts," in unexplored areas of science that the Constitution directs the USPTO to promote. U.S. CONST. art. 1, § 8. The USPTO issued the challenged claims after extensive examination, and Petitioner gives no good reason to review it again.

Respectfully submitted,

Dated: September 8, 2023

/ Qi Tong /

Qi Tong (Reg. No. 74,292)
RUSS AUGUST & KABAT
4925 Greenville Avenue, Suite 200
Dallas, TX 75206
(310) 826-7474

Attorney for Patent Owners

CERTIFICATION REGARDING WORD COUNT

Pursuant to 37 C.F.R. §42.24(d), Patent Owners certify that there are 11,093 words in the paper excluding the portions exempted under 37 C.F.R. §42.24(a)(1).

Dated: September 8, 2023

/s/ *Qi Tong*
Qi Tong

Qi Tong (Reg. No. 74,292)
RUSS AUGUST & KABAT
4925 Greenville Avenue, Suite 200
Dallas, TX 75206
(310) 826-7474

Attorney for Patent Owners

CERTIFICATE OF SERVICE (37 C.F.R. § 42.6(e)(1))

The undersigned hereby certifies that the above document was served on September 8, 2023, by filing this document through P-TACTS as well as delivering a copy via electronic mail upon the following attorneys of record for Petitioners:

Monté T. Squire (Reg. 80,123)
MTSquire@duanemorris.com
Patrick McPherson (Reg. 46,255)
PDMcPherson@duanemorris.com
Paul H. Belnap (Reg. No. 73,106)
PHBelnap@duanemorris.com

Date: September 8, 2023

/ Qi Tong /

Qi Tong (Reg. No. 74,292)
RUSS AUGUST & KABAT
4925 Greenville Avenue, Suite 200
Dallas, TX 75206
(310) 826-7474

Attorney for Patent Owners